Trials@uspto.gov
571-272-7822

Paper 31
Entered: February 19, 2019

UNITED STATES PATENT AND TRADEMARK OFFICE

BEFORE THE PATENT TRIAL AND APPEAL BOARD

adidas AG,
Petitioner,

v.

NIKE, Inc.,
Patent Owner.

Case IPR2016-00922
Patent 8,266,749 B2

Before JOSIAH C. COCKS, JAMES B. ARPIN, and SCOTT A. DANIELS, *Administrative Patent Judges.*

ARPIN, *Administrative Patent Judge.*

DECISION ON REMAND
35 U.S.C. § 144 and 37 C.F.R. § 42.5(a)

I. BACKGROUND

adidas AG ("Petitioner") filed a Petition pursuant to 35 U.S.C. §§ 311–319 to institute an *inter partes* review of claims 1–9, 11–19, and 21 of U.S. Patent No. 8,266,749 B2 (Ex. 1001, "the '749 patent").[1] Paper 2 ("Pet."). Nike, Inc. ("Patent Owner") did not file a Preliminary Response.[2] Applying the standard set forth in 35 U.S.C. § 314(a), which requires demonstration of a reasonable likelihood that Petitioner would prevail with respect to at least one challenged claim, we instituted an *inter partes* review of claims 1–9, 11–19, and 21 of the '749 patent as allegedly rendered obvious over the combined teachings of Reed and Nishida. Paper 6 ("Inst. Dec."), 23.

After institution, Patent Owner filed a Patent Owner Response to the Petition (Paper 9 ("PO Resp.")), and Petitioner replied (Paper 10 ("Reply")).[3] Each party requested an oral hearing (Papers 15 and 16), and

---

[1] Petitioner identifies adidas International B.V.; adidas North America, Inc.; adidas America, Inc.; and adidas International, Inc., as real parties-in-interest. Pet. 1.

[2] Patent Owner identifies only itself as a real party-in-interest. Paper 5, 2.

[3] Patent Owner filed objections to the admissibility of some of Petitioner's evidence. Paper 12. Petitioner served – and improperly filed – supplemental evidence in response to Patent Owner's objections. Paper 13; Ex. 1015; 37 C.F.R. § 42.64(c); *see* 37 C.F.R. § 42.64(b)(2) ("The party relying on evidence to which an objection is timely served may respond to the objection *by serving* supplemental evidence within ten business days of service of the objection." (emphasis added)); *GoPro, Inc. v. Contour IP Holding LLC*, Case IPR2015-01078, slip op. at 2–3 (PTAB Apr. 7, 2016) (Paper 40) ("If the supplemental evidence does not cure the objection and the opposing party files a motion to exclude, the submitting party may file the supplemental evidence with its opposition to the motion to exclude."). Ultimately, Patent Owner did not file a motion to exclude, and, therefore,

we held a consolidated oral hearing with Case IPR2016-00921 on July 12, 2017. A transcript of that hearing is of record in this case. Paper 20 ("Tr.").

On October 19, 2017, the panel issued its initial Final Written Decision determining that Petitioner had failed to demonstrate that any of the challenged claims in IPR2016-00922 were unpatentable. Paper 21 ("1st FWD"). Petitioner appealed that Final Written Decision to the U.S. Court of Appeals for the Federal Circuit ("the Federal Circuit") (Paper 22), and the Federal Circuit subsequently remanded that decision, so that the panel could consider an uninstituted ground for unpatentability, pursuant to *SAS Inst., Inc. v. Iancu*, 138 S. Ct. 1348, 1354 (2018), and "directed [the Board] to promptly issue a final written decision as to all grounds raised in Adidas's petitions." *See* Paper 23, 3–4 (citing *Adidas AG v. Nike, Inc.*, 894 F.3d 1256, 1257–58 (Fed. Cir. 2018)). The Federal Circuit issued the order and mandate simultaneously.

The panel modified its Institution Decision and instituted review on all of the challenged claims and on all of the grounds asserted in the Petition. *Id.* at 4. The panel granted additional briefing *limited to*: (1) addressing issues discussed in the Institution Decision with respect to the newly instituted ground (Inst. Dec. 20–22), including directing the panel to information in the record that it overlooked or misunderstood regarding Petitioner's challenge to claim 1–9, 11–19, and 21 based on the combined teachings of Castello, Fujiwara, and Nishida; and (2) addressing what impact, if any, arises from the Institution Decision's determination that Petitioner had not identified "with particularity," as required by 35 U.S.C.

Patent Owner did not preserve its objections. 37 C.F.R. § 42.64(c). Regardless, Exhibit 1015 is expunged because we did not authorize its filing.

§ 312(a)(3), the arguments and evidence that supported its challenge to claims 1–9, 11–19, and 21 based on the combined teachings of Castello, Fujiwara, and Nishida. *Id.* at 11. Petitioner was prohibited from introducing new argument or evidence with its additional briefing, with the exception of deposition testimony identified during the conference call and already existing in the record that Petitioner believes is relevant to the sufficiency of its arguments in the Petition regarding its challenge to claims 1–9, 11–19, and 21 based on the combined teachings of Castello, Fujiwara, and Nishida. *Id.* Each party filed additional briefing. Papers 24 ("Pet. Supp. Br.") and 25 (PO Supp. Br."). Petitioner requested a supplemental hearing. Paper 24, 10. The panel granted a telephonic, supplemental hearing (Paper 27, 7), and a transcript of that supplemental hearing is of record in this case. Paper 30 ("Supp. Tr.").

We have jurisdiction under 35 U.S.C. § 6, and this Final Written Decision, issued pursuant to 35 U.S.C. § 318(a) and 37 C.F.R. § 42.73, addresses issues and arguments raised during the review. For the reasons discussed below, we determine that Petitioner has not met its burden to prove, by a preponderance of the evidence, that claims 1–9, 11–19, and 21 of the '749 patent are unpatentable on the grounds upon which we have instituted *inter partes* review.

A. The '749 Patent

The '749 patent claims priority from U.S. Patent Application No. 10/791,289, filed on March 3, 2004, now issued as U.S. Patent No. 7,347,011 B2 ("the '011 patent") (Ex. 1001, (60)) and relates to articles of footwear incorporating an upper that is at least partially formed from a textile material (*id.* at 1:20–23). Conventional articles of athletic footwear

may include two primary elements: an upper and a sole structure. *Id.* at 1:25–28. The upper may form a void in the interior of the footwear for receiving a wearer's foot, and the upper may extend over the instep and toe areas, along the medial and lateral sides, and around the heel area of the wearer's foot. *Id.* at 1:42–47.

In particular, the Specification describes articles of footwear having an upper incorporating a knitted textile element and having a sole structure secured to the upper. *Id.* at 3:27–33, 47–48. Methods for manufacturing an article of footwear include "mechanically-manipulating a yarn with a circular knitting machine, for example, to form a cylindrical textile structure. In addition, the method involves removing at least one textile element from the textile structure, and incorporating the textile element into an upper of the article of footwear." *Id.* at 3:41–46.

Figure 9 of the '749 patent is reproduced below.

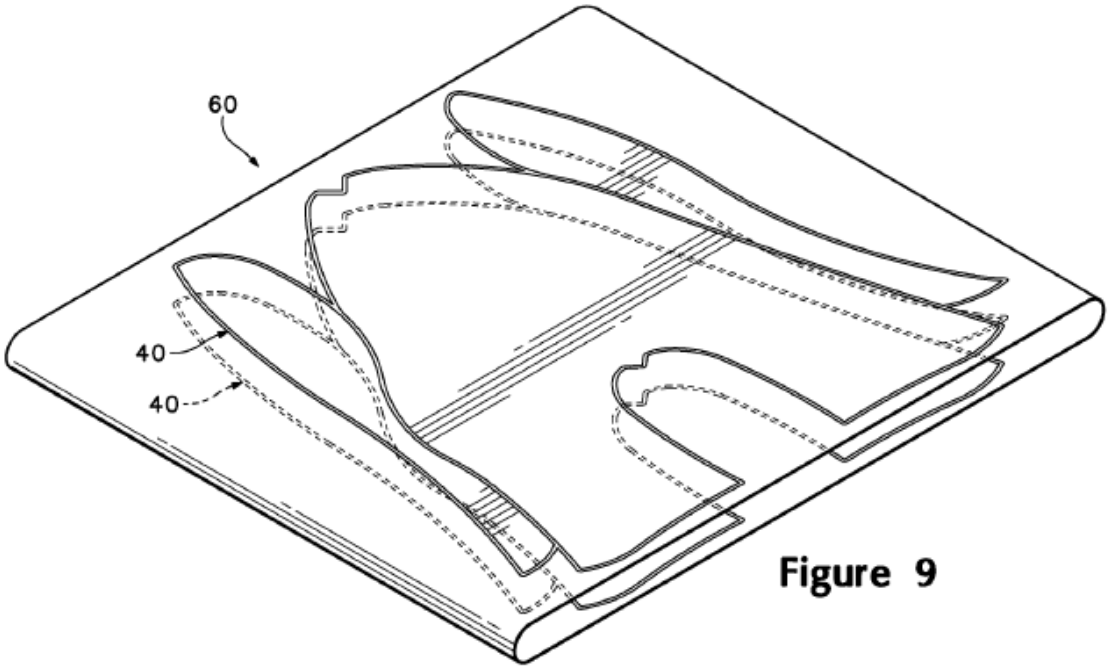

Figure 9

Figure 9 depicts textile structure 60 formed on a circular knitting machine. *Id.* at 7:38–41. For example,

> [a] suitable knitting machine for forming textile element 40 is a wide-tube circular knitting machine that is produced in the Lonati Group by Santoni S.p.A. of Italy under the SM8 TOP1 model number. This Santoni S.p.A. wide-tube circular knitting machine may form a textile structure having a diameter that ranges from 10 inches to 20 inches, with 8 feeds for each diameter.

Id. at 7:14–20. As discussed below, the types of stitches that form textile structure 60 may be varied to form an outline of one or more textile elements 40 on textile structure 60. *Id.* at 7:64–8:3. In particular, as depicted in Figure 9, the outlines for at least two textile elements 40 may be formed on textile structure 60. *Id.* at 7:53–54.

Figure 8 of the ’749 patent is reproduced below.

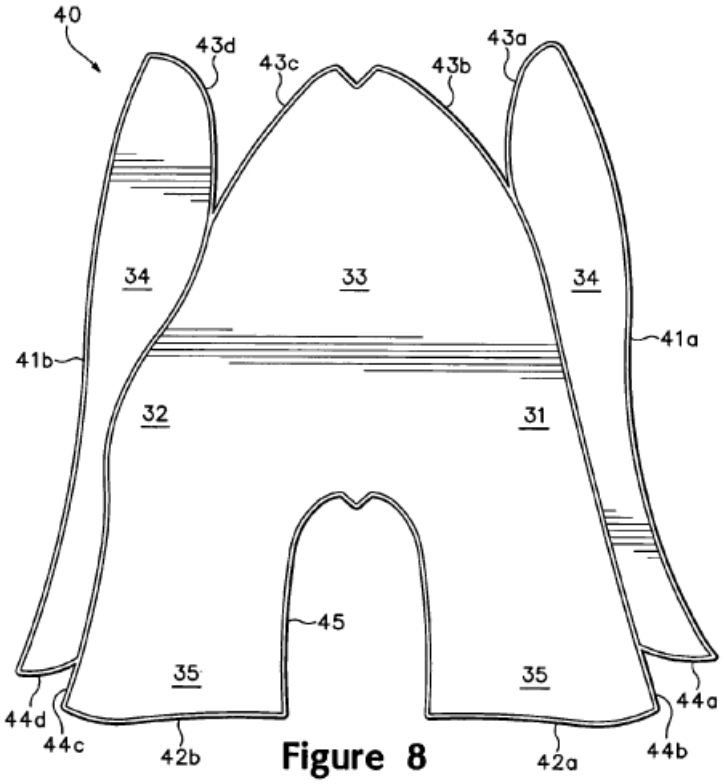

Figure 8

Figure 8 depicts an embodiment of an upper according to the ’749 patent. *Id.* at 5:59–6:64. “Textile element 40 is a single material element that is formed to exhibit a unitary (i.e., one-piece) construction, and textile element 40 is formed or otherwise shaped to extend around the foot.” *Id.* at 5:40–43; *see also id.* at Figs. 10 (depicting textile element 40′), 11 (depicting textile element 40″). In particular,

> Textile element 40 is a single material element with a unitary construction, as discussed above. *As defined for purposes of the present invention, unitary construction is intended to express a configuration wherein portions of a textile element are not joined together by seams or other connections, as depicted with textile element 40 in FIG. 8.* Although the various edges 41a-44d are joined together to form seams 51-54, the various portions of textile element 40 are formed as [a] unitary element *without seams* . . . .

Id. at 6:41–50 (emphases added). Consequently, textile element 40 is formed, such that portions of the textile element are not joined together with seams or other connections. *Id.* at 5:40–43.

Figures 4 and 5 of the ’749 patent are reproduced below.

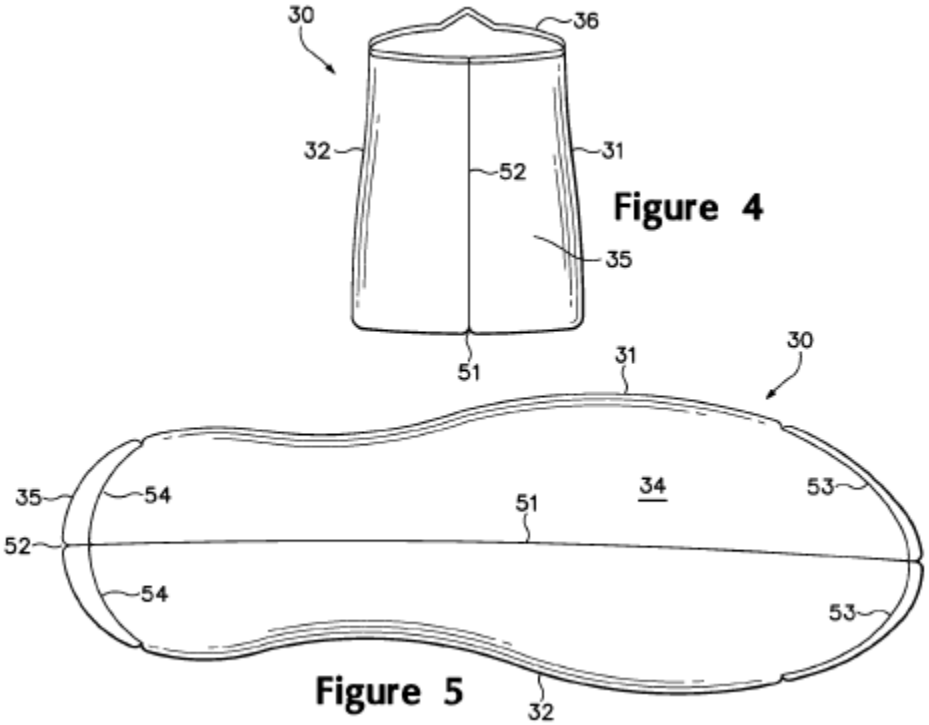

Figures 4 and 5 depict edges 41a–44d, depicted in Figure 8, are joined together to form seams 51–54, depicted in Figures 4 and 5, thereby forming at least a portion of a void for receiving the foot. *Id.* at 5:59–6:50; *see id.*, Fig. 3. In contrast, lateral region 31, medial region 32, instep region 33, lower regions 34, and heel regions 35 together have a unitary construction without seams (*id.* at 5:46–58, 6:47–50). Referring to Figure 9,

> a first textile element 40 and a second textile element 40 may be *simultaneously* formed in a single textile structure 60. As the diameter of textile element 60 is increased or the width of textile element 40 decreases, however, an even greater number of textile elements 40 may be outlined on textile structure 60.

Id. at 7:58–63 (emphasis added).

Figure 11 of the ’749 patent is reproduced below.

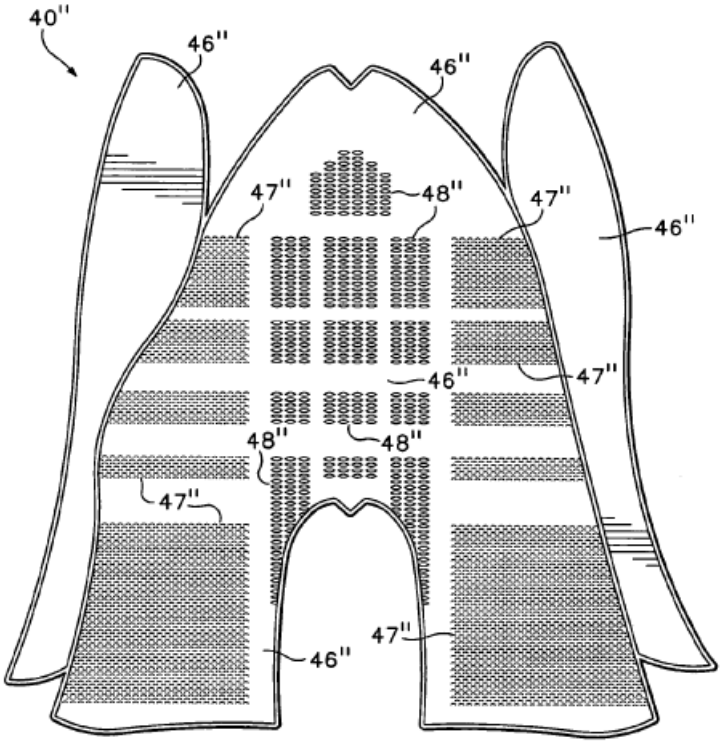

Figure 11

Figure 11 depicts another embodiment of an upper according to the ’749 patent. *Id.* at 9:29–10:7. Textile element 40″ includes three different areas with three different textures. *Id.* at 9:31–32. First texture 46″ is generally smooth and extends in strips across lateral region 31, medial region 32, and instep region 33 of the upper. *Id.* at 9:32–35. In addition, textile element 40″ includes second texture 47″ and third texture 48″. *Id.* at 9:32–35. Moreover, the Specification of the ’749 patent describes that:

> The different textures 46″-48″ are formed *by merely varying the type of stitch formed* by the wide-tube circular knitting machine at each location of textile element 40″. Textures 46″-48″ may exhibit aesthetic differences, or the differences may be structural. . . . The air-permeability of textile element 40″ may also vary in the different areas.

Id. at 9:39–47 (emphasis added).

B. Illustrative Claims

Claims 1 and 13 are independent, method claims. Claims 2–9, 11, and 12 depend directly or indirectly from claim 1, and claims 14–19 and 21 depend directly or indirectly from claim 13. Claims 1 and 11 are illustrative of the claims at issue and are reproduced below:

> 1. A method of manufacturing an article of footwear, the method comprising:
>
> simultaneously knitting a textile element with a surrounding textile structure, the knitted textile element having at least one knitted texture that differs from a knitted texture in the surrounding knitted textile structure;
>
> removing the knitted textile element from the surrounding knitted textile structure;
>
> incorporating the knitted textile element into the article of footwear.
>
> 11. The method of claim 1, wherein simultaneously knitting a textile element with a surrounding textile structure includes forming the knitted textile element to include a first area and a second area with a unitary construction, the first area being formed of a first stitch configuration, and the second area being formed of a second stitch configuration that is different from the first stitch configuration to impart varying textures to a surface of the knitted textile element.

Id. at 11:43–52 (claim 1), 12:14–21 (claim 11).

C. Related Proceedings

Neither party identifies any related litigation. Pet. 1; Paper 4, 1. As discussed above, the ’749 patent is a continuation of the application that issued as the ’011 patent, which is the subject of IPR2013-00067. Pet. 1. In that case, the panel instituted *inter partes* review of claims 1–46 of the

’011 patent, and Patent Owner requested cancellation of claims 1–46 and proposed substitute claims 47–50 in a Motion to Amend. The panel granted Patent Owner’s request to cancel claims 1–46, but denied Patent Owner’s request as to the substitute claims. Patent Owner appealed the Board’s decision to the Federal Circuit. The Federal Circuit issued a decision in Patent Owner’s appeal on February 11, 2016, which affirmed-in-part and vacated-in-part the Board’s decision, and remanded the case to the Board for further proceedings regarding the status of the substitute claims. *Nike, Inc. v. adidas AG*, 812 F.3d 1326, 1329 (Fed. Cir. 2016). The Federal Circuit issued its mandate in that case on April 4, 2016. On September 18, 2018, the panel again denied Patent Owner’s motion as to the substitute claims. IPR2013-00067, Paper 69. Patent Owner again appealed the Board’s decision to the Federal Circuit. IPR2013-00067, Paper 70.

In addition, Petitioner requested *inter partes* review of claims of related patents in IPR2016-00920 (U.S. Patent No. 8,042,288 B2), institution denied (IPR2016-00920, Paper 6, 2), and IPR2016-00921 (U.S. Patent No. 7,814,598 B2), institution granted (IPR2016-00921, Paper 6, 2). On October 19, 2017, the panel issued a Final Written Decision determining that Petitioner had failed to demonstrate that any of the challenged claims in IPR2016-00921 was unpatentable. IPR2016-00921, Paper 21. Petitioner appealed that Final Written Decision to the Federal Circuit (IPR2016-00921, Paper 22), and the Federal Circuit subsequently remanded that decision, so that the panel could consider an uninstituted ground for unpatentability, pursuant to *SAS*, 138 S. Ct. at 1354. *See* IPR2016-00921, Paper 23, 3–4.

D. Applied References and Declaration

Petitioner relies on the following references and declaration in support of its asserted grounds of unpatentability:

Exhibit	References and Declaration
1003	Declaration of Mr. Lenny M. Holden
1006	U.S. Patent No. 3,985,003 to Reed, issued Oct. 12, 1976 ("Reed")
1007	U.S. Patent No. 4,038,840 to Castello, issued Aug. 2, 1977 ("Castello")
1008	U.S. Patent No. 6,330,814 B1 to Fujiwara, issued Dec. 18, 2001 ("Fujiwara")
1009	U.S. Patent No. 5,345,638 to Nishida, issued Sept. 13, 1994 ("Nishida")
1010	David J. Spencer, *Knitting technology: a comprehensive handbook and practical guide*, 1–413 (2001) (3rd Ed., Woodhead Publ. Ltd.) ("Spencer")
1012	International Standard, *Textile machinery — Knitting machines — Nominal diameters of circular machines*, 1–6 (2003) (2nd Ed., ISO 8117:2003(E)) ("ISO 8117")

Pet. iv.

E. Instituted Grounds of Unpatentability

We instituted review on the following ground of unpatentability:

References	Basis	Challenged Claims
Reed and Nishida	35 U.S.C. § 103(a)	1–9, 11–19, and 21
Castello, Fujiwara, and Nishida	35 U.S.C. § 103(a)	1–9, 11–19, and 21

Pet. 7; *see* Paper 23, 4.

II. ANALYSIS

A. Person of Ordinary Skill in the Art

Petitioner argues that a person of ordinary skill in the relevant art would have at least a few years of experience in the footwear industry, *a broad understanding of shoemaking*, and an understanding of (1) the product cycle for the process of designing, developing and bringing a new product to market; (2) milestones for reviewing upper material designs; (3) *the available and varied ranges of typical construction methods within a product cycle*; and (4) the functional requirements of footwear and the range of material choices available. Pet. 8 (citing Ex. 1003 ¶ 34) (emphasis added). Patent Owner contests Petitioner's assessment of the level of ordinary skill in the relevant art, but does not propose an alternative assessment. PO Resp. 17–19.

Initially, Patent Owner contends that Petitioner has failed to consider appropriate factors identified by our reviewing court and utilized by other panels to assess the level of ordinary skill in the art. *Id.* at 17–18. We agree with Petitioner that it is not necessary to consider every factor or to weigh the factors equally in order to assess the level of ordinary skill in the art. Reply 2 (quoting *In re GPAC Inc.*, 57 F.3d 1573, 1579 (Fed. Cir. 1995)).

Here, we may rely on Petitioner's declarant's testimony (Ex. 1003 ¶ 34) and the teachings of the prior art to evaluate Petitioner's assessment of the level of ordinary skill in the art. *Okajima v. Bourdeau*, 261 F.3d 1350, 1355 (Fed. Cir. 2001). In particular, Reed, Castello, Fujiwara, and Nishida identify the types of problems encountered in the prior art solutions to these problems, and the sophistication of the technology. *E.g.*, Ex. 1006, 1:13–55; Ex. 1007, 1:8–32, 2:12–64; Ex. 1008, 1:11–54; Ex. 1009, 1:10–36; *see, e.g.*, Ex. 1010, 145–160; *see also* Ex. 1010, Preface:

> The aim of this book is to combine in a single volume the fundamental principles of weft and warp knitting in such a manner that its contents are useful to readers in education, industry or commerce. It thus [fulfills] the long felt need for a comprehensive up-to-date textbook explaining this important sector of textile technology.

Patent Owner contends that the level of ordinary skill in the art is "low" (PO Resp. 17–18), but it is not clear whether Patent Owner further contends that Petitioner's assessment is deficient because Petitioner fails to argue that a person possessing such a "low" level of ordinary skill in the art also would have "experience using knitting technologies to create knitted footwear uppers" (*id.* at 18–19) or whether the inclusion of such skill would raise the "low" level of skill in the art (*id.* at 19). Alternatively, Patent Owner may merely be contending that Petitioner's declarant fails to qualify as a person of ordinary skill in the art. *Id.* at 19 ("If it was too 'dangerous' for Mr. Holden with his nearly forty years of experience, a person with just a 'few years of experience' would not have had any knitting experience, let alone experience using knitting technologies to create uppers."); *see* Tr. 62:17–22. Patent Owner is not required to help us assess the level of ordinary skill in the art and does not do so here. *See* PO Resp. 22

("Petitioner may criticize NIKE for not submitting an expert declaration. But it is Petitioner's burden to prove unpatentability; it is not NIKE's burden to prove patentability.").

In response to Patent Owner's contentions, Petitioner argues that the level of ordinary skill in the art is not low and that hands-on knitting experience is not required. Reply 2–3. Petitioner further argues Patent Owner has not required knitting experience in its previous assessment with respect to a related patent of the level of ordinary skill in the art. *Id.* at 2 (citing IPR2013-00067, Ex. 2010 ¶ 52). The parties do not attempt to argue the level of ordinary skill further in their supplemental briefing. *See* Pet. Supp. Br. 4–5; PO Supp. Br. 4 n.1. Based on the record before us and to the extent necessary, we again adopt Petitioner's assessment of a person of ordinary skill in the relevant art. 1st FWD 11 (citing Inst. Dec. 8 n.3).

B. Claim Construction

In an *inter partes* review, claim terms in an unexpired patent are construed according to their broadest reasonable interpretation in light of the specification of the patent in which they appear. 37 C.F.R. § 42.100(b). Under that standard, claim terms are given their ordinary and customary meaning, as would be understood by one of ordinary skill in the art in the context of the entire disclosure. *In re Translogic Tech., Inc.*, 504 F.3d 1249, 1257 (Fed. Cir. 2007). The following four claim terms are at issue in this proceeding. 1st FWD 11–15.

1. "a first area and a second area with a unitary construction" (Claims 11 and 21)

Petitioner argues that the term "a first area and a second area with a unitary construction" means "a textile element having a unitary construction

and having a first area and a second area." Pet. 6. As Petitioner notes, this is the construction that this panel gave to the same term appearing in the substitute claims of the '011 patent. *adidas AG v. Nike, Inc.*, Case IPR2013-00067, slip op. at 16–17 (PTAB Apr. 28, 2014) (Paper 60); *see adidas AG v. Nike, Inc.*, Case IPR2013-00067, slip op. at 11–12 (PTAB Sept. 18, 2018) (Paper 69). We further note that the '749 patent's Specification provides that "[a]s defined for purposes of the present invention, unitary construction is intended to express a configuration *wherein portions of a textile element are not joined together by seams or other connections*, as depicted with textile element 40 in FIG. 8." Ex. 1001, 6:42–46 (emphasis added); *see* IPR2013-00067, Ex. 1002, 6:41–46 (identical disclosure). The '011 patent and the '749 patent share the same Specification (apart from their claims), neither party contested our construction of this term in the appeal of our decision in the *inter partes* review of the claims of the '011 patent, and Patent Owner does not contest Petitioner's proposed construction of this term in this proceeding. Therefore, in view of the express definition of the phrase "unitary construction" in the Specification of the '749 patent, we adopt Petitioner's proposed construction as the broadest reasonable interpretation for this term. *See* Tr. 20:5–13, 37:11–17.

2. "wide-tube circular knitting machine" (Claims 9 and 19)

We determine that the broadest reasonable interpretation of the term "wide-tube circular knitting machine" is "a circular knitting machine forming body garment sized, tubular textile structures, including those having a diameter that ranges from 10 inches to 20 inches." *See* Inst. Dec. 9–11. Neither party contests this construction. *See* Tr. 20:5–13, 37:11–17.

3. "impart" (claims 11 and 21) and "texture" (claims 8, 11, and 21)

During the course of the review, the parties raised issues regarding the construction of two additional terms that appear only in the challenged dependent claims. First, Petitioner argues that the term "impart" means "to give, convey, or grant from." Reply 24 (citing Ex. 1014).[4] Further, Petitioner argues that this definition is consistent with the use of the word "impart" in the Specification of the '749 patent. *E.g.*, Ex. 1001, Abstract, 1:30–35, 1:60–63, 1:65–2:3, 3:33–37, 7:35–37; *see* Tr. 21:4–14. Patent Owner does not propose an alternative construction for the term "impart." Further, neither party argues that the term "impart" carries special meaning in the relevant art. In fact, we find Spencer's use of the word "impart" in the handbook on knitting technology consistent with Petitioner's dictionary definition and the word's use in the Specification of the '749 patent. *See* Ex. 1010, 184, 216. Thus, to the extent any construction of this term is necessary, we find that the broadest reasonable interpretation of the term "impart" is "to give, convey, or grant from." *See Summit 6, LLC v. Samsung Elecs. Co.*, 802 F.3d 1283, 1291 (Fed. Cir. 2015) ("[E]ach [term] is used in common parlance and has no special meaning in the art. Because the plain and ordinary meaning of the disputed claim language is clear, the district court did not err by declining to construe the claim term.").

---

[4] Petitioner relies on a definition of "impart" from a current, on-line dictionary rather than from a dictionary contemporaneous with the effective filing date of the '749 patent. However, the record contains no suggestion that the relevant definition of "impart" has changed since the effective filing date of the '749 patent, and we determine that it has not. *See* RANDOM HOUSE WEBSTER'S COLLEGE DICTIONARY, 659 (2nd ed. 1999) (Ex. 3001) ("impart" means "to give; bestow").

Second, although Petitioner does not provide an express interpretation for the term "texture,"[5] Petitioner's declarant testifies "texture" "generally could be an actual texture or a perceived texture based on the arrangement of colors in a pattern." Reply 4–5 (citing Ex. 2004, 178:20–24; *see also id.* at 177:1–178:19, 178:25–184:11). Patent Owner disputes Mr. Holden's interpretation of "texture," which appears inconsistent with Spencer's discussion of texture. *See* Ex. 2004, 80:24–81:8. In particular, according to Spencer, "[c]olour is one of the five ingredients of fashion, the other four being style, silhouette, *texture* and pattern." Ex. 1010, 127 (emphasis added). Thus, Spencer distinguishes between color and texture.

The Specification of the '749 patent does not define "texture," but contrasts between "smooth" and "textured" areas of a textile element. Ex. 1001, 9:20–21. Moreover, with respect to Figure 11, the Specification of the '749 patent explains that:

> The different textures 46"-48" are formed by merely varying the type of stitch formed by the wide-tube circular knitting machine at each location of textile element 40". Textures 46"-48" may exhibit aesthetic differences, or the differences may be structural. For example, the degree of stretch in areas with textures 46"-48" may be different, or the wear resistance of the areas may vary depending upon the stitch utilized. The air-permeability of textile element 40" may also vary in the different areas. Third texture 48" is formed to include a plurality of apertures that extend through textile element 40". The apertures may be formed by omitting stitches at specific locations during the wide-tube circular knitting process, and the apertures facilitate the transfer of air between the void within

[5] A relevant dictionary definition of the word "texture" is "the characteristic structure of the threads, fibers, etc., that make up a textile fabric: *course texture*," "a rough or grainy surface quality," or "anything produced by weaving; woven fabric." Ex. 3001, 1351.

> upper 20 and the area outside of upper 20. *Accordingly, the various stitches formed in textile element 40", or one of textile elements 40 or 40', may be utilized to vary the texture, physical properties, or aesthetics of footwear 10 within a single, unitary element of material.*

Id. at 9:39–57 (emphasis added). From this explanation, we understand that "texture," as used in the '749 patent, is distinguishable from the physical and aesthetic properties of a textile element. According to the recitations of claims 11 and 21, "texture" is produced as part of the step recited in claims 1 and 13 of "simultaneously knitting a textile element with a surrounding textile structure." *See* Ex. 1001, 11:45–46. Thus, to the extent any construction of this term is necessary, we find that the broadest reasonable interpretation of the term "texture" in the context of claims 11 and 21 is "a non-smooth surface formed while simultaneously knitting a textile element with a surrounding textile structure." Such a surface may be created by "varying the type of stitch formed by the wide-tube circular knitting machine at each location of textile element 40"." *Id.* at 9:39–42.

4. Other Claim Terms

For purposes of this Final Written Decision, we discern no other claim terms that require express interpretation. *See Nidec Motor Corp. v. Zhongshan Broad Ocean Motor Co.*, 868 F.3d 1013, 1017 (Fed. Cir. 2017) (explaining that claim terms need to be construed "only to the extent necessary to resolve the controversy" (quoting *Vivid Techs., Inc. v. Am. Sci. & Eng'g, Inc.*, 200 F.3d 795, 803 (Fed. Cir. 1999))).

C. Obviousness over Reed and Nishida

1. Overview

Petitioner argues that claims 1–9, 11–19, and 21 are unpatentable under 35 U.S.C. § 103(a) as obvious over the combined teachings of Reed and Nishida. To support its arguments, Petitioner provides a detailed mapping of limitations of the challenged claims to Reed and Nishida. Pet. 13–32. Petitioner also cites Mr. Holden's Declaration for support. *See* Ex. 1003 ¶¶ 91–138.

A patent claim is unpatentable under 35 U.S.C. § 103(a) if the differences between the claimed subject matter and the prior art are "such that the subject matter as a whole would have been obvious at the time the invention was made to a person having ordinary skill in the art to which said subject matter pertains." *KSR Int'l Co. v. Teleflex Inc.*, 550 U.S. 398, 406 (2007). The question of obviousness is resolved on the basis of underlying factual determinations, including: (1) the scope and content of the prior art; (2) any differences between the claimed subject matter and the prior art; (3) the level of skill in the art;[6] and (4) objective evidence of nonobviousness, *i.e.*, secondary considerations.[7] *See Graham v. John Deere Co.*, 383 U.S. 1, 17–18 (1966). On this record and for the reasons set forth below, we are not persuaded that Petitioner demonstrates by a preponderance of the evidence that claims 1–9, 11–19, and 21 of the '749 patent are unpatentable as rendered obvious over the combined teachings of

---

[6] *See supra* Section II.A.; *see also* Ex. 1003 ¶ 36 ("Based on my experience, I have an understanding of the capabilities of the skilled person in this field, and my opinions are provided from the perspective of such a person.").

[7] The record lacks arguments or evidence of secondary considerations. *See generally* PO Resp.; Pet. Supp. Br. 4–5.

Reed and Nishida. We begin our analysis with a summary of the applied references.

2. Reed (Ex. 1006)

Reed is directed to a method of manufacturing a wearable item, which includes, among other things, simultaneously knitting two concentric tubes with a circular-knitting machine to form a cylindrical textile structure (Ex. 1006, Abstract, 1:58–64, 2:22–25, 3:3–5), textile elements located in different portions of the textile structure (*id.* at 2:29–31), removing the textile elements from the textile structure (*id.* at 3:12–19, 5:67–6:5), and incorporating the textile element(s) "to form *all types of garments* worn by men, women and children" (*id.* at 5:56–58 (emphasis added); *see id.* at 1:33–35).[8] In particular, Reed describes methods of making preseamed garments (*id.* at 3:8–21) or preseamed sections of a garment, which sections may be seamed together "by standard practices" to form a garment (*id.* at 6:10–17). As Reed explains,

> *From the preceding description of the preferred embodiments, it is evident that the objects of the invention are obtained to produce a preformed and preseamed fabric on a circular knitting machine so as to reduce time, cost and labor involved in making garments.* The types of program used to form the

[8] Patent Owner contends that Reed is not analogous art. PO Resp. 34–36. In particular, Patent Owner contends that Reed is not from the same field of endeavor as the challenged claims and that Reed's teachings are not reasonably pertinent to the particular problem with which the recited methods are involved. *Id.* at 34–35. Because Reed is directed to the manufacture of all types of garments, including footwear (Reply 12–13; *see* Ex. 1006, 1:33–44), and Reed is related directly to preparation of garments' layouts from a knitted textile structure (Reply 14–15; *see* Ex. 1006, 2:29–35), we are persuaded that Reed is analogous art to the challenged claims.

> final product is to be varied with the imagination of the programmer, as well as the type of product which may be formed. The essence of the present invention is a garment formed of juxtaposed sections of simultaneously knitted, concentric tubes interconnected by knitting.

Id. at 6:18–28 (emphasis added).

Reed's Figure 1 is reproduced below.

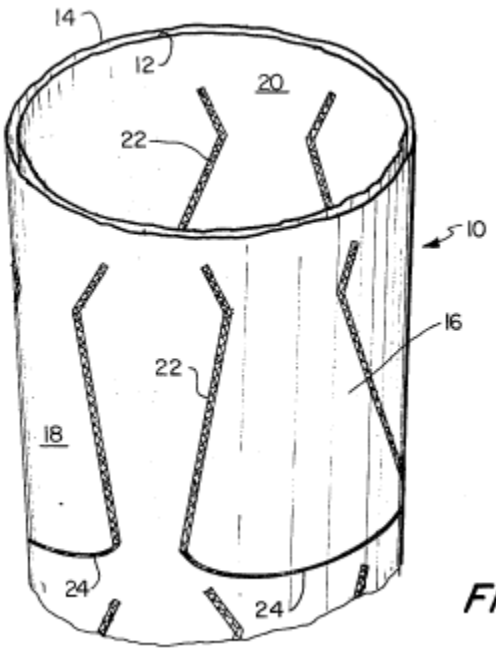

FIG. 1

Figure 1 depicts tubular knitted structure 10, such as that produced by a circular knitting machine. *Id.* at 2:66–3:1. Knitted structure 10 comprises inner tube 12 and outer tube 14, and

> [a]round the circumference of the knitted structure 10 are illustrated three garments which, for example, may be skirts 16, 18 and 20.[9]
>
> The garments 16, 18 and 20 are outlined by a plurality of interconnecting knitted stitches 22 and 24. *The interconnecting knitting 22 not only forms the outline of the garments 16, 18*

[9] We are persuaded that "skirts" are "body garments." *See* Ex. 1003 ¶ 97.

> *and 20, but joins the inner tube 12 to the outer tube 14 so as to create a seam.* The interconnecting knitting 24 is merely to define the lower outline of the skirt upon which the pattern may be cut.

Id. at 3:1–15 (emphasis added).

Reed explains that the use of circular knitting machines in the garment industry historically was limited to making tubular, knitted garments, such as ladies stockings, sweaters, and other garments, wherein the entire knitted fabric was used as a unit to form one surface of a finished garment. Pet. 10–11 (citing Ex. 1006, 1:33–44; Ex. 1003 ¶ 94); *see supra* Section II.C.1. (note 6). Reed further teaches that "[c]omputer electronic knitting brought about the possibilities of making patterns and designs of up to three million stitches (previously approximately 50,000 was maximum). With this system, patterns and designs are possible that before could not be made." Ex. 1006, 1:50–55; *see* Ex. 1003 ¶ 95. Reed states that its method uses "an electronic circular double knitting machine" and that an "object of the [Reed] invention is to provide a method of reducing the cost of manufacturing of garments by using the versatility of a computerized electronic knitting machine." Ex. 1006, 1:58–59, 2:22–25, Figs 1–6; *see* Ex. 1003 ¶ 95. Further, Reed teaches that:

> If the present process is used to preform *an exterior decorative fabric having a lining or inner-lining or interfacing attached thereto*, the severed sections must be assembled *and seamed by standard practices*. By providing the lining or interfacing already attached to the section, a substantial amount of time is saved in measuring, marking and cutting the original fabric and lining or interlining as well as stitching them together.

Ex. 1006, 6:10–17 (emphases added).

3. Nishida (Ex. 1009)

Nishida is directed to the production of a shoe upper by (1) cutting out a layout in the form of the shoe upper from a web of material and (2) shaping the shoe upper by connecting material parts of the layout by the formation of seams. *See* Ex. 1009, Abstract. By this process, such shoe uppers may be produced efficiently and in reduced time despite the many individual parts present or to be made visible. *Id.*

Figure 2 of Nishida is reproduced below.

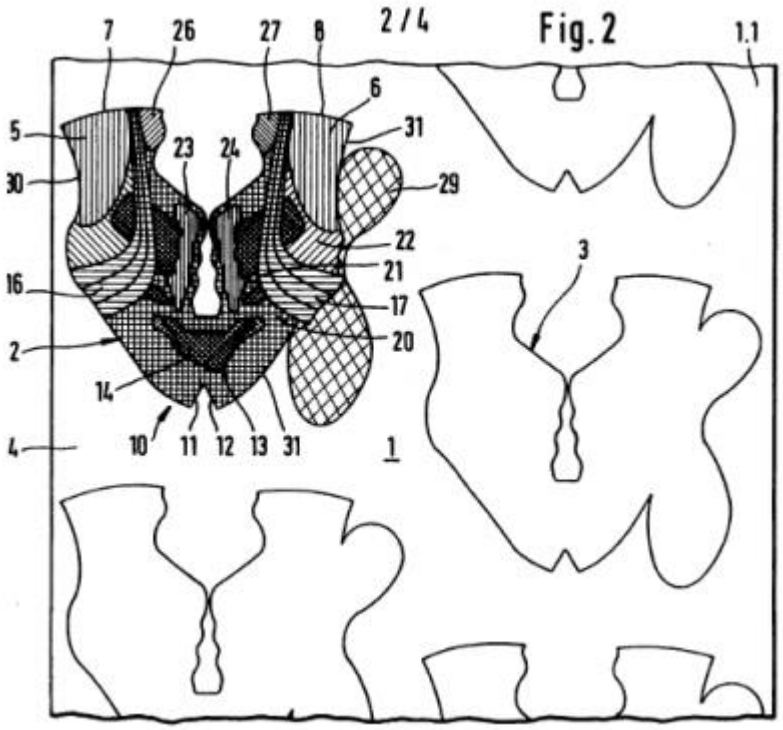

Figure 2 illustrates an embodiment of the upper layout according to Nishida. *Id.* at 3:6–12. Web of material 1 may include one or a plurality of layouts 2. Further, web of material 1 includes backing 4 that may be a knitted material, and different areas of layouts 2 may be formed by knitting different yarns or fibers on backing 4. *Id.* at 3:15–26, 5:63–6:2. Moreover, Nishida's web of

material 1 may be "knitted in two or more layers or can be especially thick or additionally embroidered." *Id.* at 3:66–4:1.

Consequently, web of material 1 may be used to produce layouts 2 by different production measures, such as different styles, yarn material, color, material thickness, number of layers of material, or the like, simultaneously with the production of web of material 1. *Id.* at 4:12–18; *see id.* at 3:66–4:1, Figs. 1, 2. Each layout 2, including a sole part, may be cut from web of material 1 as a unit and processed into an upper. *Id.* Nishida describes the manufacture of an article of footwear incorporating such an upper. *Id.* at 3:9–12, Fig. 3.

Figure 4 of Nishida is reproduced below.

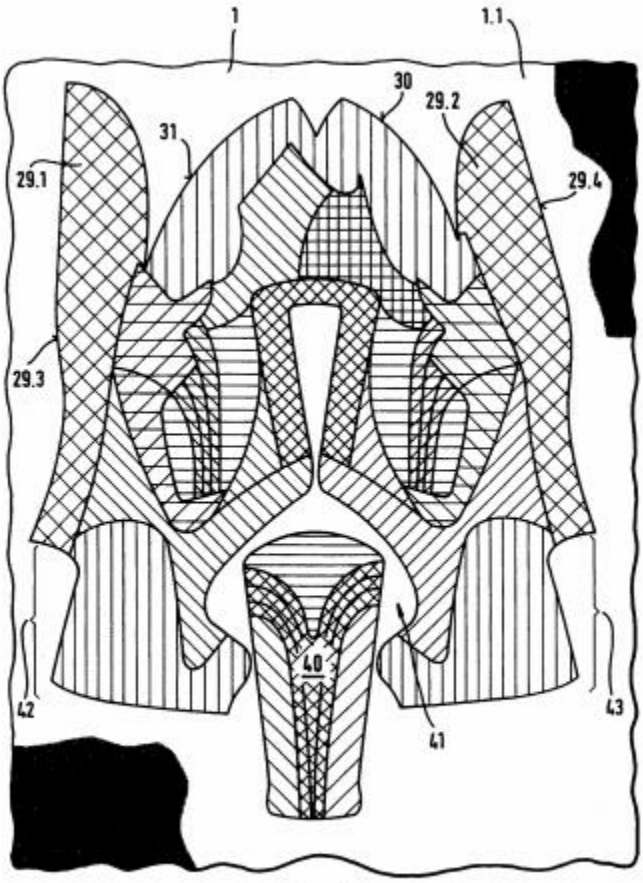

Fig. 4

Figure 4 depicts a section of web of material 1 with radially symmetric layout 2 having sole part sections 29.1 and 29.2 provided on opposite sides of the upper, as well as tongue 40. *Id.* at 2:64–66. Nishida sets forth the following in association with Figure 4:

> [T]ongue 40, for example, according to FIG. 4, can be provided also in the course of producing the web of material 1 with different weave structures and/or weave patterns and/or embroideries or with one or with several prints or the like. On a web of material 1, different tongues 40 can be produced corresponding to a shoe shape and/or a shoe size both in shape, size, color or colors, patterns or the like. Preferably, in each case, related tongues 40 are produced simultaneously with a layout 2 on same web of material 1.

> For optimum surface use of web of material 1, a tongue 40 can be produced in the open space 41 located between the two layout sections 42 and 43, which later form the rear of foot or heel-pan shoe part.
>
> Preferably, each layout 2 has at least five, preferably more than ten, patterns and a tongue 40 has at least two, preferably at least three patterns produced or appearing, which are different from one another in each case.

Id. at 5:27–44; *cf. id.*, Fig. 2 (reproduced above, depicting web of material 1 including layouts 2 without tongues). Thus, as depicted in Figure 4, tongues may be individual parts of an article of footware "produced separately and applied to the upper later" and are of a relatively simple, substantially rectangular shape. Ex. 1009, 2:45–47, *see id.* at 4:39–40 (describing the inclusion of a tongue in a *known* article of footware). Tongues and uppers may be taken from the same web of material or from different webs. *See id.* at 5:37–40.[10]

4. Petitioner's Arguments

Petitioner argues that Reed and Nishida teach or suggest all of the limitations of claims 1–9, 11–19, and 21 of the '749 patent. Pet. 9–32. In particular, Petitioner argues that Reed and Nishida teach or suggest all of the limitations of each of independent claims 1 and 13. *Id.* at 13–19 (claim 1), 20–21 (claim 13).

[10] Although we find that Nishida teaches layouts both of an upper and of a tongue, Petitioner does not argue that Nishida's tongue layouts separately teach textile elements that may be incorporated into an article of footwear. *See* Pet. 16, 28; Ex. 1003 ¶ 86, App'x C (pg. 140).

a. Independent Claims 1 and 13

Independent claim 1 recites "[a] method of manufacturing an article of footwear." Ex. 1001, 11:43; *see also id.* at 12:27 (claim 13). Reed teaches that its circular knitting methods may be used to manufacture "all types of garments." Ex. 1006, 5:56–57. Although Reed specifically identifies stockings and hosiery (*id.* at 1:33–35, 5:57–58), *e.g.*, footwear, as garments manufactured by circular knitting, Reed does not describe shoes expressly as "garments." Nishida teaches processes for manufacturing footwear and that the webs of material depicted in its Figures 1 and 2 are "produced by a *conventional* textile process, [for] example, by weaving *and/or knitting* and/or embroidering." Ex. 1009, 3:6–9 (emphases added); *see* Ex. 1003 ¶ 132. Thus, we are persuaded that Petitioner has shown that Reed alone, as well as the combined teachings of Reed and Nishida,[11] teach or suggest a method of manufacturing an article of footwear.

The method of claim 1 further comprises the step of "*simultaneously* knitting a textile element with a surrounding textile structure, the knitted textile element having at least one knitted texture that differs from a knitted texture in the surrounding knitted textile structure." Ex. 1001, 11:45–48 (emphasis added). Similarly, claim 13 recites:

---

[11] Because Petitioner argues that Reed alone, as well as the combined teachings of Reed and Nishida, teach or suggest this limitation of claim 1 (Pet. 12–13) and that Nishida alone teaches or suggests the final limitation of claim 1 (*id.* at 16), Petitioner's asserted ground necessarily rests on the *combined* teachings of Reed *and* Nishida. *See* Supp. Tr. 13:19–14:6; Pet. Supp. Br. 3 ("Indeed, for Ground 1, the Petition cited to both Nishida and Reed as disclosing multiple elements (e.g., Pet., 14-16), and the Board agreed that both individually teach multiple claim elements. *See* [1st FWD], 23-24.").

> knitting a first textile element and a second textile element *simultaneously* with knitting a surrounding textile structure, the first knitted textile element located within a first portion of the knitted textile structure, the second knitted textile element located within a second portion of the knitted textile structure,
>
> varying at least one of the types of stitches or the types of yarns in the knitted textile structure to impart a texture to the first and second knitted textile elements different from a texture of the knitted textile structure extending between the first and second portions

Id. at 12:29–39 (emphasis added).

Reed teaches simultaneously knitting textile elements, including producing body garments, such as skirts (*see* Ex. 1006 Fig. 2), shirts and pants (*see id.* at Fig. 3), and dresses (*see id.* at Fig. 6), for men, women, and children (*id.* at 5:56–57) with a surrounding textile structure. Pet. 14–15. Reed further teaches simultaneously knitting textile elements, including sections of garments having "an exterior decorative fabric having a lining or inner-lining or interfacing attached thereto." Ex. 1006, 6:10–12. As noted above, Reed teaches that computerized knitting processes made possible numerous stitch varieties. *See id.* at 1:50–59; Ex. 1003 ¶ 95. Nishida also supplies this limitation. Pet. 14–15. Nishida's Figure 2, reproduced above (*see supra* Section II.C.3.) depicts textile elements, such as layouts 2, with a surrounding textile structure, such as web of material 1. Pet. 15–16; *see* Ex. 1009, 3:15–26. Moreover, as noted above,

> *[T]ongue 40, for example, according to FIG. 4, can be provided also in the course of producing the web of material 1 with different weave structures and/or weave patterns and/or embroideries or with one or with several prints or the like. On a web of material 1, different tongues 40 can be produced corresponding to a shoe shape and/or a shoe size both in shape,*

> *size, color or colors, patterns or the like.* Preferably, in each case, related tongues 40 are produced simultaneously with a layout 2 on same web of material 1.
>
> . . .
>
> Preferably, each layout 2 has at least five, preferably more than ten, patterns and a tongue 40 has at least two, preferably at least three patterns produced or appearing, which are different from one another in each case.

Ex. 1009, 5:27–36, 41–44 (emphasis added). Thus, we determine that either Reed or Nishida teaches "simultaneously knitting a textile element with a surrounding textile structure" and "the first knitted textile element located within a first portion of the knitted textile structure," as recited in independent claims 1 and 13, respectively.

With regard to the second part of this limitation of claims 1 and 13, which Petitioner refers to as limitations 1C and 13C, Petitioner argues that:

> Reed describes using different types of stitches or yarns to impart a knitted texture to the textile element(s) that is different from a knitted texture in the surrounding textile structure. For example, Reed describes that the edges of the garments 16, 18, 20 are formed by interknitted stitches, whereas the remainder of the garments 16, 18, 20 are formed by non-interknitted stitches. . . . *Because the interknitted stitches are part of the garments 16, 18, 20, they form a texture in the garments that is different from the texture in the surrounding textile structure.*

Pet. 16 (emphasis added; citing Ex. 1006, 5:3–18; Ex. 1003 ¶¶ 108–109); *see* Ex. 1006, 6:10–17 (describing the knitting of garment sections). Similarly, Petitioner argues that Nishida teaches that:

> "*only just those parts of the web of material are produced in the necessary quality, thickness, multilayers or the like which correspond to the pattern or to an area of a pattern of the shoe upper or the related shoe part.* The remaining area of the web of material in contrast can consist of a simple, lightweight or

> inexpensive material quality, which holds together only the patterns or areas of such patterns in the web of material after their completion."

Pet. 17 (emphasis added; quoting Ex. 1009, 2:12–20; citing Ex. 1003 ¶¶ 110–111); *see* Ex.1009, 5:27–44 (describing the knitting of various tongues). We determine that either Reed or Nishida teaches this second part of the limitations of independent claims 1 and 13.

The method of claim 1 further comprises the step of "removing the knitted textile element from the surrounding knitted textile structure." Ex. 1001, 11:49–50; *see also id.* at 12:40–41 (claim 13 recites "removing the first and second knitted textile element from the knitted textile structure"). Because the recited "textile structure" may be manufactured on a circular knitting machine (*id.* at 12:7–9 (claim 9), 64–67 (claim 19)), we are persuaded based on the evidence cited in the Petition that Petitioner has shown that the teachings of Reed, or the combined teachings of Reed and Nishida, teach or suggest this limitation of the independent claims. Pet. 18 (claim 1; citing, *e.g.*, Ex. 1006, 3:12–19; Ex. 1009, 1:10–18); *id.* at 21 (claim 13); *see* Ex. 1003 ¶¶ 103–104.

Finally, the method of claim 1 comprises the step of "*incorporating* the knitted textile element *into* the article of footwear." Ex. 1001, 11:51–52 (emphases added); *see id.* at 12:42–43 (claim 13). Petitioner relies solely on Nishida to supply this limitation, and argues that Nishida teaches this limitation of the independent claims. Pet. 16 (claim 1), 20 (claim 13); *see* Ex. 1003 ¶ 126. We agree.

Petitioner argues that a person of ordinary skill in the art would have had reason to combine the identified teachings of Reed and Nishida to achieve the methods recited in independent claims 1 and 13. Pet. 11–13. In

particular, Petitioner argues that, because Reed teaches that its methods are applicable to "*all* types of garments" (Ex. 1006, 5:56–57 (emphasis added); *see* Ex. 1003 ¶ 131), a person of ordinary skill in the art would have had reason to apply the teachings of Reed to the processes and shoe parts of Nishida. Pet. 12 (citing Ex. 1003 ¶ 133). Further, Petitioner argues that, because both Reed and Nishida teach the advantages of reducing cost through the use of computer-controlled knitting machines, a person of ordinary skill in the art would have had reason to combine their teachings. *Id.* at 13 (citing Ex. 1003 ¶¶ 134–135). Finally, Petitioner argues that a person of ordinary skill in the art would have had reason to apply Reed's methods for producing textile elements, from which to produce garments, to produce Nishida's shoe upper layouts. *Id.*

b. Dependent Claims 2–9, 11, 12, 14–19, and 21

With respect to the challenged dependent claims, Petitioner argues that Reed teaches or suggests the additional limitations recited in claims 9 and 19 (Pet. 29–31; *see supra* Section II.B.2.); that Nishida teaches or suggests the additional limitations recited in claims 7, 12, 17, and 18 (Pet. 25, 31–32); and that Reed and/or Nishida teaches or suggests the additional limitations recited in claims 2–6, 8, 11, 14–16, and 21 (Pet. 19, 21–29, 31; *see supra* Section II.B.1.). Petitioner provides a detailed mapping of the limitations of each of these dependent claims onto the teachings of Reed and/or Nishida. *See* Ex. 1003, App'x A. Moreover, Petitioner argues that a person of ordinary skill in the relevant art would have had at least the same reason to combine the teachings of Reed and Nishida to achieve the methods recited in these dependent claims, as those

given for combining the teachings of Reed and Nishida to achieve the recited methods of the independent claims. *See* Pet. 11–13.

Although we have reviewed the entirety of Petitioner's analysis and evidence for both the independent and dependent claims, we emphasize the following specific evidence and arguments. Claim 11 recites:

> The method of claim 1, wherein simultaneously knitting a textile element with a surrounding textile structure includes forming the knitted textile element *to include a first area and a second area with a unitary construction*, the first area being formed of a first stitch configuration, and the second area being formed of a second stitch configuration that is different from the first stitch configuration to impart varying textures to a surface of the knitted textile element.

Ex. 1001, 12:14–21 (emphasis added). Claim 21 depends from claim 13 and recites substantially the same limitations as claim 11. *Id.* at 13:5–14:5.

Petitioner argues that Reed teaches these limitations in two ways. Pet. 31. First, Petitioner argues Reed teaches that the edges of the garments 16, 18, 20, depicted in Reed's Figure 1 (reproduced above) are formed by interknitted stitches and that the remainder of the garments 16, 18, 20 are formed by non-interknitted stitches. *Id.* at 25 (citing Ex. 1003 ¶¶ 115–116 with respect to the limitations of claim 8). Specifically, the seams or outlines of the garments 16, 18, 20 are formed with interknitted stitches (shown in X's and O's in Reed's Figure 2), which are formed by feeds 1, 2, 3, and 4 on needles 7, 9, 8, and 10, as shown in Reed's Figures 3B and 3D. Ex. 1006, 5:3–18, Figs. 3A–3E; *see* Ex. 1003 ¶ 115. Reed further teaches that "two feeds[, *i.e.*, feeds 1, 3 for the dial needles] are used for one course of the inner-tube 12 and two feeds[, *i.e.*, feeds 2, 4 for the cylinder needles] are used for the outer tube 14." Ex. 1006, 4:61–64, Figs. 2, 2A, 3A–3E; *see id.* at 5:67–6:3; Ex. 1003 ¶¶ 115–116. Thus, because the stitches create a

texture different from the remainder of the textile element, Petitioner concludes that Reed teaches "a first area and a second area with a unitary construction."

Second, Petitioner argues that Reed teaches "how the two layers 12, 14 themselves may be formed of different yarns or stitch configurations." Pet. 26 (citing Ex. 1003 ¶ 117). In particular, Reed describes the following:

> If the two tubes 12 and 14 are knitted of two different fibers, the knitted structure may form sections of a garment to be assembled in the regular manner. For example, the outside tube 14 may be a normal decorative fabric wherein the inner tube 12 may be formed of material such as lining. By simultaneously knitting and interknitting the two layers, a step is saved by producing a section of garment which is prelined. Similarly, the layer 12 (instead of being lining) may be interfacing, which is attached to the outside layer 14 and again saves a step in the manufacture of garments. Another example where two different fibers are used to make the inner and outer tubing would be in the foundation garment industry, where the inner fabric could be cotton or other soft fibers and the outer fabric would be lycra or elasticized yarns.

Ex. 1006, 3:61–4:8; *see* Pet. 26, 31; Ex. 1003 ¶ 117. Taking into account the above-noted description, Petitioner alternatively argues that Reed's separate, circular knitted tubes may be the first and second areas recited in claims 11 and 21.

Finally, Petitioner alternatively argues that Nishida also teaches the limitation of "a first area and a second area with a unitary construction." Pet. 26–27, 31. In particular, Nishida teaches "in the embodiment according to FIGS. 1 and 2, with layout 2 on the web of material 1, areas 26 and 27 are produced in a *configuration, color or style that is different from the other areas*." Ex. 1009, 4:6–9 (emphasis added); *see id.* at Abstract, 1:65–69,

2:40–45, 3:15–26, 3:47–48, 4:12–28, 4:48–55, 5:56–6:2; Ex. 1003 ¶¶ 118–119. Nishida further states:

> [l]ayout 2 is divided into different individual parts or areas, which differ from one another, such as by being of another material style and/or by being of different fibers or yarns, for example, from wool, wool with metal yarns, silk, silk with metal yarns, wool with plastic fibers or the like . . . .

Ex. 1009, 3:15–25; *see* Ex. 1003 ¶ 121. Petitioner argues that Nishida's teachings achieve a textile element with multiple knit constructions. Pet. 27. Specifically, these varying constructions of Nishida's layout may achieve varying elasticity, air permeability, absorptivity, softness, extensibility, wear resistance, and appearance, which Petitioner argues teach the "varying textures" recited in these claims. *Id.* (citing Ex. 1009, 3:43–52, 5:63–6:2, 6:1–31); *see* Ex. 1003 ¶¶ 120–121. Thus, Petitioner argues that either Reed or Nishida teaches the above-noted limitation. Petitioner, however, does not specifically address the limitation's requirement that the knitted textile element is formed to include a first area and a second area "with a unitary construction" or how Reed and/or Nishida teaches "a unitary construction." *See* Pet. 31; *see also supra* Section II.B.1. (construing "a first area and a second area with a unitary construction" (Claims 11 and 21)).

Although we have emphasized specific evidence and arguments, we have reviewed the entirety of Petitioner's analysis and evidence for independent claims 1 and 13, as well for dependent claims 2–9, 11, 12, 14–19, and 21, and the supporting testimony of Mr. Holden. As noted above, Petitioner relies on the same reasons to combine the teachings of Reed and Nishida for its challenges to each of claims 1–9, 11–19, and 21 of the '749 patent. *See* Pet. 11–13.

5. *Patent Owner's Contentions*

Patent Owner raises seven separate contentions why Petitioner fails to demonstrate that the combined teachings of Reed and Nishida render any of claims 1–9, 11–19, and 21 of the '749 patent unpatentable. *See* PO Resp. 2–4. Because we find certain of the Patent Owner's contentions persuasive and dispositive, we do not address each of Patent Owner's separate contentions.

a. Low Level of Ordinary Skill in the Art

Patent Owner contends that Petitioner's assessment of the level of ordinary skill in the art is conclusory and is not based on the factors that the Board has considered in determining the level of ordinary skill in the art. *Id.* at 17–19. We have addressed the appropriate assessment of the level of ordinary skill in the art above. *See supra* Section II.A. Whether the level of ordinary skill in the art is "low" or "high" may make it more or less difficult for Petitioner to demonstrate obviousness. PO Resp. 19 ("In sum, the level of ordinary skill in the art at the time of the '749 patent was low. It is more difficult, therefore, for Petitioner to establish obviousness. . . ."); *see Kinetic Concepts, Inc. v. Smith & Nephew, Inc.*, 688 F.3d 1342, 1366 (Fed. Cir. 2012) ("Because it is generally easier to establish obviousness under a higher level of ordinary skill in the art, we must assume that, in light of the jury's verdict, it adopted the lower level of skill proposed by S & N." (citation omitted)). However, a "low" relative level of skill alone does *prevent* Petitioner from demonstrating obviousness.

Here, only Petitioner – the party bearing the burden of persuasion – has proposed an assessment of the level of ordinary skill in the art. *See*

supra Section II.A.; *but see* IPR2013-00067, Ex. 2010 ¶ 52 (Patent Owner proposed that a "POSITA . . . would have a few years of experience with design and development of footwear and knowledge of textiles used in such footwear"). For the reasons set forth above, we have adopted Petitioner's assessment. Further, as noted above, Petitioner's declarant testifies from the point of view of someone with the assessed level of skill, a level which the declarant exceeds. *See* Ex. 1003 ¶ 36; Ex. 1004. Thus, regardless of whether the level of ordinary skill is deemed "low" or "high," we are not persuaded that the relative assessment of the level of ordinary skill in the art here affects our evaluation of Petitioner's arguments and evidence.

b. Weight Given to Declarant's Testimony

Patent Owner contends that Petitioner's declarant, Mr. Holden, did not author his declaration and, during cross-examination, Mr. Holden was unable to answer basic questions about the declaration, the patent at issue, the prior art, footwear, and knitting technologies. PO Resp. 19; *see* Ex. 2004, 12:2–18. Mr. Holden testified that "[he] worked with counsel one on one to basically give her a verbal description of my opinions and -- and my thoughts on the -- on these issues, and she did the actual typing of the document." Reply 3 (quoting Ex. 2004, 12:7–11); *see* Ex. 2004, 12:12–13:16. Declarants often have assistance in authoring their declarations. *See Square, Inc. v. Think Computer Corp.*, Case CBM2014-00159, slip op. at 26–27 (PTAB Nov. 27, 2015) (Paper 47) ("the mechanics of declaration preparation is 'a waste of time, both for the witness and the Board'"). Mr. Holden was not required to be the sole author of his declaration. Rather, the relevant issue regarding the preparation of Mr. Holden's declaration is

whether Mr. Holden adopted the content of his declaration as his own. Here, he has. *See* Ex. 1003 ¶¶ 3–4, 209.

As Patent Owner suggests, we weigh Mr. Holden's declaration testimony in light of his testimony on cross-examination. Although Mr. Holden indicated that he was unable to define or was unfamiliar with certain terms during cross-examination, he did name references, including Spencer (Ex. 1010), that he could and would consult to obtain the answers to specific questions. Tr. 63:20–64:13. Moreover, Patent Owner's counsel acknowledged that persons of ordinary skill in the art (or declarants) do not have to have all of the knowledge relevant to their testimony in their heads and that they are allowed to consult references, as appropriate. *Id.* at 63:20–64:2. Although Patent Owner notes that Mr. Holden apparently was not aware of Spencer until this *inter partes* review (*see* Ex. 2004, 77:1–3; Tr. 64:1–6), his learning of and relying on a *new* reference alone is not sufficient reason to disregard, *i.e.*, give *no* weight to, Mr. Holden's testimony. Further, the issue here is not whether Mr. Holden is a person of ordinary skill in the art, but rather whether his testimony is of value to the panel. *See* Tr. 64:15–18. Thus, as indicated in the discussion below, we determine the appropriate weight to give to Mr. Holden's testimony.

c. Failure to Explain How and Why a Person of Ordinary Skill in the Art Would Have Combined the Teachings of Reed and Nishida to Achieve the Recited Methods

Initially, Patent Owner contends that Petitioner fails to address the full scope and content of the prior art and ignores critical disclosure of both references. PO Resp. 24. In particular, Patent Owner notes that "Reed states that his 'present invention relates generally to knitted garments and more

particularly to a garment which is preseamed and preformed on a circular knitting machine.'" *Id.* (quoting Ex. 1006, 1:8–11 (emphasis omitted)); *see* Tr. 36:3–9. Patent Owner contends that this description of Reed's "present invention" limits the scope of Reed to *preseamed* garments made on circular knitting machines. PO Resp. 24–25. Although this description may limit the scope of Reed's recited methods, the scope of Reed's teachings is broader than what Reed specifically refers to as the "present invention" (Ex. 1006, 1:8–11) and encompasses "the conventional methods involv[ing] superimposing two preexisting panels of material, forming a garment into those preexisting panels, cutting the shaped garment from the two preexisting panels, and then seaming the two cutouts together to create the final garment" (PO Resp. 25 (citing Ex. 1006, 6:18–22)). *See* Reply 7 (quoting *In re Heck*, 699 F.2d 1331, 1332–33 (Fed. Cir. 1983) ("The use of patents as references is not limited to what the patentees describe as their own inventions or to the problems with which they are concerned. They are part of the literature of the art, relevant for all they contain." (citation omitted))). Although Reed's teachings may be broader than preseamed garments and sections garments, Petitioner relies only on the embodiments of Reed's invention that are directed to preseamed garments *and* to preseamed sections of garments. Pet. 14 (citing Ex. 1006, 1:58–64); Reply 6–8; *see* Tr. 9:17–10:7, 16:17–17:8, 25:17–26:21, 30:4–11.

With respect to Nishida, Patent Owner contends that Nishida's web of material has two primary components: a backing and one or more layouts printed on or produced in the backing. PO Resp. 28–29 (citing Ex. 1009, 1:40–2:53, 3:6–26). The backing may be formed prior to the production of the layouts. *Id.* Patent Owner notes that Nishida seeks to improve on

previously known methods for producing layouts, such as those described in German Patent No. 627 878. *Id.* at 28. Nevertheless, the reference to the German patent is exemplary, and we do not interpret Nishida as limited to the methods described in the German Patent. *See* Ex. 1009, 1:39–46; Reply 8.

After the backing is formed, Nishida teaches printing on or producing layouts in the backing. Ex. 1009, 3:13–15. The layouts are printed by a fabric printing process *onto* the backing or produced by a textile production process *inside* the backing. PO Resp. 29 (citing Ex. 1009, 1:50–56, 2:20–26, 3:13–15, 5:45–52); *see* Reply 9. "[T]he material can be woven or knitted in two or more layers or can be especially thick or additionally embroidered." Ex. 1009, 3:66–4:1.

As noted above, each of the embodiments of Reed, relied upon by Petitioner, describes the pre-seaming of garments or sections of garments *before* their removal from the cylindrical textile structure. The teachings of Nishida relied upon by Petitioner, do not teach pre-seaming but, instead, teach the seaming of the upper layout *after* its removal from the web of material. Ex. 1009, 4:19–30 (Figs. 2 and 3), 5:3–26 (Figs. 4 and 5); *see* Pet. 24; PO Resp. 31; Tr. 45:2–46:8. Patent Owner contends that Petitioner fails to explain why and how a person of ordinary skill in the art would combine the relied upon teachings of Reed and Nishida to achieve the recited methods of the challenged claims. PO Resp. 36–41. In particular, because Petitioner relies on the teachings of the embodiments of Reed which describe pre-seamed garments and pre-seamed sections of garments, and because Nishida does not teach such pre-seaming, Patent Owner contends that Petitioner has not shown why and how a person of ordinary skill in the

art would combine the teachings of Reed and Nishida to achieve the recited methods of the challenged claims. For the following reasons, we agree.

i. Failure of Proof

Petitioner bears the burden of proving by a preponderance of the evidence that the challenged claims are unpatentable. This includes demonstrating by a preponderance of the evidence that a person of ordinary skill in the art would have had reason to combine the teachings of Reed and Nishida to achieve the methods recited in the challenged claims. As noted above, Petitioner argues that a person of ordinary skill in the art would have had at least three reasons to combine the teachings of Reed and Nishida to achieve the methods recited in the challenged claims. Pet. 11–13; *see* Tr. 10:12–11:12. First, Petitioner argues that, because Reed teaches that its methods are applicable to "*all* types of garments" (Ex. 1006, 5:56–57 (emphasis added); *see* Ex. 1003 ¶ 131), a person of ordinary skill in the art would have had reason to apply the teachings of Reed to the processes and shoe parts of Nishida. Pet. 12 (citing Ex. 1003 ¶ 133). Second, Petitioner argues that, because both Reed and Nishida teach the advantages of reducing cost through the use of computer-controlled knitting machines, a person of ordinary skill in the art would have had reason to combine their teachings. *Id.* at 13 (citing Ex. 1003 ¶¶ 134–135). Third, Petitioner argues that a person of ordinary skill in the art would have had reason to apply Reed's methods for producing textile elements, from which to produce garments, to produce Nishida's shoe upper patterns. *Id.* However, none of these reasons or any other reason identified by Petitioner addresses the differences between Reed and Nishida, specifically pre-seaming.

Independent claims 1 and 13 do not mention seaming or pre-seaming expressly. *See* Ex. 1001, 11:43–52 (claim 1), 12:27–43 (claim 13). Further, Patent Owner acknowledged that at least independent claims 1 and 13 do not mention seaming or pre-seaming. Tr. 37:7–10. Claims 2–9, 11, 12, 14–19, and 21 also do not mention seaming or pre-seaming expressly. *See* Ex. 1001, 11:51–57, 12:7–20, 12:29–32, 12:41–48. As we noted above, however, claims 11 and 21 recite "a unitary construction," which "is intended to express a configuration *wherein portions of a textile element are not joined together by seams or other connections*." *Id.* at 6:42–46. Thus, we interpret the limitations of claims 11 and 21 to recite a textile element having areas of different textures, *but without seams*. *See supra* Section II.B.1. Moreover, under principles of claim differentiation, we are persuaded that the scope of challenged claims 1–9 and 12–19 is broad enough to encompass methods related to both pre-seamed and unseamed garments and garment sections. Nothing in the Specification (Ex. 1001) or in the prosecution history (Ex. 1002) of the '749 patent overcomes the presumptive scope of the independent claims arising from the doctrine of claim differentiation. *See Kraft Foods, Inc. v. Int'l Trading Co.*, 203 F.3d 1362, 1368 (Fed. Cir. 2000).

Neither Petitioner nor its declarant, Mr. Holden addresses the fact that *each* of the relied upon embodiments of Reed teaches pre-seaming, and that *none* of the relied upon teachings of Nishida involves pre-seaming. PO Resp. 36–41; *see* Tr. 34:17–35:12; *see also* Ex. 2004, 161:5–163:19 (Mr. Holden was unable to identify teachings in Nishida directed to pre-seamed and preformed uppers). Moreover, during cross-examination, Mr. Holden acknowledged that he had not been asked to nor had he

considered *how* the teachings of these references could be combined. In particular, the following colloquy occurred during Mr. Holden's deposition:

> Q. (By Mr. Harris) And isn't it also true that nowhere in your declaration do you describe how a person of ordinary skill in the art would create a preseamed and preformed footwear upper on a circular knitting machine?
>
> MS. WILLIAMS: Objection.
>
> THE WITNESS: I don't recall that there's any por- -- portion of that. Again, I was not asked to hypothesize on that particular po1st
>
> Q. (By Mr. Harris) Okay. Just so I'm clear, you weren't asked to offer an opinion on how a person of ordinary skill in the art would create a preseamed and preformed footwear upper on a circular knitting machine; correct?
>
> A. I don't recall that I was asked that particular question.
>
> Q. Thank you.

Ex. 2004, 152:22–153:13; *see* Tr. 53:19–57:5.

In *ActiveVideo Networks, Inc. v. Verizon Communications, Inc.*, our reviewing court found that where "[t]he expert failed to explain how specific references could be combined, which combination(s) of elements in specific references would yield a predictable result, or how any specific combination would operate or read on the asserted claims," such testimony "is not sufficient and is fraught with hindsight bias." 694 F.3d 1312, 1327 (Fed. Cir. 2012); *see* PO Resp. 58–60; Reply 27; *see also Hyundai Motor Co. v. Blitzsafe Texas, LLC*, Case IPR2016-01476, slip op. at 33 (PTAB Jan. 24, 2017) (Paper 12) ("A determination of obviousness cannot be reached where the record lacks 'explanation as to *how* or *why* the references would be combined to produce the claimed invention.'"; quoting *Trivascular, Inc. v. Samuels*, 812 F.3d 1056, 1066 (Fed. Cir. 2016)). Despite Mr. Holden's

testimony that a person of ordinary skill in the art would have had reason to combine the teachings of Reed and Nishida to achieve the recited methods of the challenged claims (*see* Ex. 1003 ¶¶ 131–137), Mr. Holden's testimony during cross-examination makes clear that he did not perform the necessary analysis to support his conclusions. *See* 37 C.F.R. § 42.65(a).

Petitioner's evidence, and, in particular, Mr. Holden's testimony, also is deficient with respect to the limitations recited in claims 11 and 21, in that it fails to offer any explanation why a person of ordinary skill in the art would combine the teachings of Reed and Nishida to achieve a method in which seams of the kind taught by Reed apparently are prohibited. Petitioner argues that Reed teaches the "a unitary construction" limitation of claims 11 and 21 either because the interconnecting stitches are a different texture from the rest of the garment or garment section or because the inner and outer circular knit materials may have different textures. Pet. 25–29, 31. Thus, Mr. Holden testifies in support that Reed's interknitted stitches, i.e., the joining seams, teach textures different from the remainder of Reed's finished garments or garment sections (Ex. 1003 ¶¶ 114–116) or that circular knit materials, although joined by seams, may have different textures (*id.* ¶ 117). These arguments and testimony are inconsistent with Petitioner's position that *either* the finished garments *or* garment sections are the "textile element" recited in the challenged claims and that, in claims 11 and 21,

> the knitted textile element [is formed] to include a first area and a second area *with a unitary construction*, the first area being formed of a first stitch configuration, and the second area being formed of a second stitch configuration that is different from the first stitch configuration to impart varying textures to a surface of the knitted textile element.

Pet. 19–20, 25–29, 31 (emphasis added); *see* Tr. 16:17–17:12. These inconsistencies are not explained.

Alternatively, Petitioner argues (Pet. 26–29, 31) and Mr. Holden testifies (Ex. 1003 ¶¶ 118–121) that the limitations of claims 11 and 21 are taught by Nishida. In particular, Mr. Holden testifies that Nishida describes that, "in the embodiment according to FIGS. 1 and 2, with layout 2 on the web of material 1, ***areas 26 and 27 are produced in a configuration***, color or style ***that is different from the other areas***." *Id.* ¶ 118 (quoting Ex. 1009, 4:6–9 (emphasis added by declarant)). Mr. Holden concludes from his analysis of Nishida that "[a] person of ordinary skill in the art at least as of March 3, 2004 would have understood that Nishida's disclosure regarding varying the knit of individual areas would include having a substantially smooth texture in one area, and a rougher texture in another area." *Id.* ¶ 121. What Mr. Holden fails to explain, however, is how and why this teaching of Nishida is combined with the teachings of the relied upon embodiments of Reed to achieve the methods recited in claims 11 and 21. Petitioner and its declarant rely instead on the *general* arguments presented in connection with independent claims 1 and 13 regarding reasons to combine the teachings of Reed and Nishida. Pet. 11–13; Ex. 1003 ¶¶ 131–137. Given the language of the claims, our interpretation of that language, and the teachings of Reed and Nishida, we find Petitioner's arguments and evidence, especially Mr. Holden's testimony, insufficient and unpersuasive.

Consequently, having weighed Petitioner's evidence of reasons to combine the teachings of Reed and Nishida, noting the deficiencies in Mr. Holden's analysis in support of those reasons, we are not persuaded that Petitioner has demonstrated by a preponderance of the evidence that a

person of ordinary skill in the art would have had reason to combine the teachings of Reed and Nishida to achieve the methods recited in the challenged claims.

ii. Combined Teachings of Reed and Nishida Render Reed Inoperable for its Intended Purpose

As our reviewing court has explained,

> "obviousness is a question of law based on several underlying factual findings," including what a reference teaches, and whether proposed modifications would change a reference's "principle of operation." Where "a patent claims a structure already known in the prior art that is altered by the mere substitution of one element for another known in the field, the combination must do more than yield predictable results." *However, combinations that change the "basic principles under which the [prior art] was designed to operate," or that render the prior art "inoperable for its intended purpose," may fail to support a conclusion of obviousness.*

Plas-Pak Industries, Inc. v. Sulzer Mixpac AG, 600 F. App'x 755, 757–758 (Fed. Cir. 2015) (non-precedential) (citations omitted, emphasis added).

As noted above, we find that the fundamental purpose of Reed's methods is to produce pre-seamed, finished garments or sections of garments. *E.g.*, Ex. 1006, 1:58–64, 3:8–21, 5:67–6:17; *see supra* Section II.C.2. As Reed explains, "[t]he essence of the present invention is a garment formed of juxtaposed sections of simultaneously knitted, *concentric* tubes *interconnected* by knitting." Ex. 1006, 6:25–28 (emphases added). As we also noted above, the methods recited in challenged claims 1–9 and 12–19 do not specify whether or not the textile elements are pre-seamed. Thus, we interpret those claims broadly to cover both pre-seamed and unseamed textile elements.

As discussed above, however, claims 11 and 21 are interpreted to describe "a unitary construction," which does not include seams. *See supra* Section II.B.1. Thus, "a unitary construction" does not appear to read on Reed's pre-seamed, finished garments or garment sections. Further, Petitioner does not argue that, like Reed, Nishida teaches pre-seamed uppers or sections of uppers or tongues. Consequently, we determine that, relying on Nishida's teachings to supply the "unitary construction" limitation with respect to claims 11 and 21 in the context of the teachings of Reed, as Petitioner suggests (Pet. 26–29, 31), would require the alteration of the principles of operation of Reed or would render Reed inoperable for its intended purpose.

In response to Patent Owner's contention that Petitioner's combination of the teachings of Reed and Nishida renders Reed inoperable for its intended purpose, Petitioner argues that a person of ordinary skill in the art would understand that

> [t]o produce two single-layer layouts, the POSITA would simply cut along the garment side of stitches 22, 24 (highlighted in red below) so that all seams remain with the surrounding tube material, and the two layouts are no longer connected to each other after removal from the tubes 12, 14.

Reply 18–19 (citing Ex. 1006, 3:9–15, 5:67–6:3; Ex. 1003 ¶¶ 103, 112). In particular, Petitioner produces the following annotated version of Reed's Figure 1.

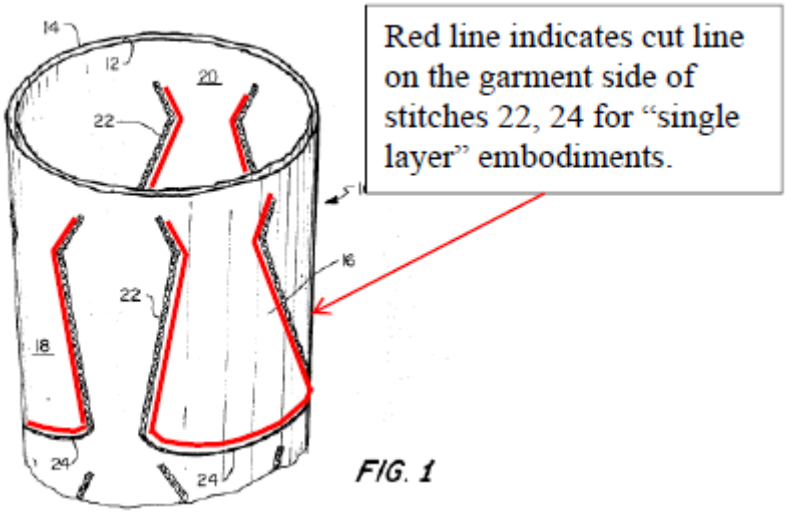

Reply 19. Petitioner has annotated Reed's Figure 1 to add red lines indicating cut lines *on* the garment *inside* of stitches 22, 24. Thus, as depicted in annotated Figure 1, Petitioner argues that the finished garments or garment sections could be cut from the textile structure inside of the seams, as indicated by the red lines, to remove the seams from the garments or garment sections. *Id.* According to Petitioner, "[t]he two separated layouts are *then* processed *and seamed* along the edges, as described in both Reed and Nishida." *Id.* (emphases added). Nevertheless, Petitioner provides no explanation of why a person of ordinary skill in the art would have reason to seam the garments or garment sections, only then to remove the seams, so that the garments or garment sections could be reseamed later. *Id.* at 18–19; *see* Tr. 59:21–60:12, 68:20–70:21.[12] We find these arguments contrary to the teachings of Reed and unpersuasive.

---

[12] Petitioner's counsel argues that Reed's seams may be used as an outline, but we do not find that Reed teaches that cuts are taught inside the outline to remove the seam from the garment section. Ex. 1006, 3:9–12 (*Interconnected* knitted stitches form *both* an outline and a seam joining the inner and outer tubes.); *see* Tr. 70:2–21. Cutting inside the seams of a

Consequently, with respect to challenged claims 11 and 21, we find that Petitioner's proposed combination of the teachings of Reed and Nishida would render Reed either inoperable or unsuitable for its intended purpose. Thus, we are not persuaded that Petitioner has demonstrated by a preponderance of the evidence that a person of ordinary skill in the art would have had reason to combine the teachings of Reed and Nishida to achieve the methods recited in challenged claims 11 and 21.

6. Summary

Based on our review of the arguments and evidence presented by each party, we conclude that Petitioner fails to demonstrate by a preponderance of the evidence that either of independent claims 1 and 13 is unpatentable as rendered obvious by the combined teachings of Reed and Nishida. Moreover, at least because Petitioner's arguments for the obviousness of dependent claims 2–9, 11, 12, 14–19, and 21 over Reed and Nishida rely on the arguments and evidence presented with respect to independent claims 1 and 13, we also conclude that Petitioner fails to demonstrate by a preponderance of the evidence that any of the dependent claims is unpatentable as rendered obvious by the combined teachings of Reed and Nishida. We further determine that for the additional reasons set forth above, Petitioner fails to demonstrate by a preponderance of the evidence

---

finished garment would change a *finished* garment into an *unfinished* garment or a *seamed* garment section into an *unseamed* garment section and would appear entirely contrary to the teachings of Reed. *See* Ex. 1006, 3:15–21.

that claims 11 and 21 are rendered obvious by the combined teachings of Reed and Nishida.[13]

D. Obviousness over Castello, Fujiwara, and Nishida

1. Overview

Petitioner argues that claims 1–9, 11–19, and 21 are unpatentable under 35 U.S.C. § 103(a) as obvious over the combined teachings of Castello, Fujiwara, and Nishida. To support its arguments, Petitioner provides a detailed mapping of limitations of the challenged claims to Castello, Fujiwara, and Nishida. Pet. 33–56. Petitioner also cites Mr. Holden's Declaration for support. *See* Ex. 1003 ¶¶ 145–193. We provide a summary of the applied references below.[14]

2. Evaluating Petitioner's Arguments and Evidence

Initially, we note that we declined to institute *inter partes* review of the challenged claims based on the combined teachings of Castello, Fujiwara, and Nishida because we found that Petitioner failed to articulate its challenge *with particularity*, as required under 35 U.S.C. § 312(a)(3). Inst. Dec. 21–23. For example, with the exception of the final limitations of independent claims 1 and 13, for which Petitioner relies solely on the teachings of Nishida (Pet. 44, 46), it is unclear from Petitioner's arguments and claim charts, which reference or combination of references Petitioner relies upon to teach or suggest each limitation of the independent claims (*id.* at 37–44, 45–46). At the Supplemental Hearing, Petitioner attempted to

[13] Patent Owner also contends that Reed teaches away from its combination with Nishida (PO Resp. 46–48; *but see* Reply 19–20); however, in view of our determinations above, we need not reach this contention.

[14] Nishida is summarized above. *See supra* Section II.C.3.

overcome this lack of particularity with Demonstrative Slide 3 (Ex. 1018, 3), which presented a *new* mapping of the limitations of claim 1 onto the applied references. Supp. Tr. 9:24–10:20, 23:15–21. This mapping, however, is not consistent with the claim chart's mapping of *each* of the references onto the preamble and the first three limitations of claim 1. Pet. 37–44. We have analyzed Petitioner's arguments and evidence and reached certain conclusions regarding a possible mapping of the limitations of the claims onto particular references or combinations of references; by statute and regulation, however, this was Petitioner's task, not ours.[15] 35 U.S.C. § 312(a)(3); 37 C.F.R. § 42.104(b)(4); *see Acceleration Bay, LLC v. Activision Blizzard Inc.*, 908 F.3d 765, 775 (Fed. Cir. 2018).

Petitioner argues that the particularity requirement of 35 U.S.C. § 312(a)(3) and the finding of a lack of particularity has no impact on our Final Written Decision. Pet. Supp. Br. 1. Instead, Petitioner argues that we must determine whether Petitioner has satisfied its burden of showing

[15] Unlike in *Polygroup Limited MCO v. Willis Electric Company, Ltd.*, No. 2018-1745, 2019 WL 350753, at *7 (Fed. Cir. Jan. 28, 2019) (non-precedential) or in *Realtime Data, LLC v. Iancu*, No. 2018-1154, 2019 WL 149835, at *4 (Fed. Cir. Jan. 10, 2019), Petitioner does not challenge claims based on a single reference or on alternative combinations of references, but *only* on the *combined* teachings of Castello, Fujiwara, and Nishida. Pet. 37 ("[A] person of ordinary skill in the relevant art would certainly have been motivated to modify Castello's method to include the additional features described by Fujiwara and Nishida to produce a textile element for use in a shoe upper, as well as to produce a shoe incorporating such a textile element."); Pet. Supp. Br. 4 ("The record shows *Castello and Fujiwara* would be used by a POSITA to produce a footwear upper *per Nishida*." (emphases added)); *see* Supp. Tr. 13:11–16:22. Therefore, unlike *Polygroup* or *Realtime*, there is no other challenge based on fewer than all of these three references for us to consider.

unpatentability of the challenged claims by a preponderance of the evidence. *Id.* at 2. Specifically, Petitioner asserts that "[n]othing in the statute authorizes the Board to finally resolve merits questions on 'particularity' grounds." *Id.* at 2. We disagree. "In an [*inter partes* review], the petitioner has the burden from the onset to show *with particularity* why the patent it challenges is unpatentable." *Harmonic Inc. v. Avid Tech., Inc.*, 815 F.3d 1356, 1363 (Fed. Cir. 2016) (emphasis added; citing 35 U.S.C. § 312(a)(3) (requiring *inter partes* review petitions to identify "with particularity . . . the evidence that supports the grounds for the challenge to each claim")); *see U.S. v. Dunkel*, 927 F.2d 955, 956 (7th Cir. 1991) ("Judges are not like pigs, hunting for truffles buried in briefs.").

Moreover, as Patent Owner points out, the Board has determined that a petitioner may fail to satisfy its burden of persuasion due to its failure to argue its challenge with the required particularity. PO Supp. Br. 5–6 (citing *HTC Corp. v. Koninklijke Philips N.V.*, Case IPR2017-00857, slip op. at 18 (PTAB Aug. 24, 2018) (Paper 33) and *EMC Corp. v. Intellectual Ventures I LLC*, Case IPR2017-00439, slip op. at 16 (PTAB Jun. 20, 2018) (Paper 50)). Perhaps most on point, Patent Owner notes that:

> [the Board] denied institution on [a] ground because
>
> > the arguments and evidence in the Petition lack *the particularity and detail required by* [*35 U.S.C. § 322(a)(3)*[16] and 37 C.F.R. § 42.22(a)(2)], and fail to demonstrate that it is more likely than not that [the challenged claims] are unpatentable as indefinite under 35 U.S.C. § 112, second paragraph.

[16] 35 U.S.C. § 322(a)(3) applies to covered business method reviews and corresponds to 35 U.S.C. § 312(a)(3).

> In response to *SAS Institute Inc. v. Iancu*, 138 S. Ct. 1348 (2018), [the Board] issued an Order instituting trial on the ground of [the challenged claims] being unpatentable under 35 U.S.C. § 112, 2nd paragraph. . . .
>
> For the reasons stated [in the] Institution Decision, which [the Board] adopt[ed], Petitioner fail[ed] to show by a preponderance of the evidence that [the challenged claims] are unpatentable under 35 U.S.C. § 112, 2nd paragraph.

PO Supp. Br. 6 (quoting *Dish Network Corp. v. Customedia Techs., L.L.C.*, Case CBM2017-00032, slip op. at 34 (PTAB Jul. 25, 2018) (Paper 50)). In our view, the determination by the Board that a Petitioner has failed to explain or justify a ground of unpatentability "with particularity" is in accord with a determination made by the Board, on the same or similar evidentiary record, that a Petitioner has failed to make its case by a preponderance of the evidence. Stated differently, a lack of clarity or adequate explanation that is present when determining whether to institute trial does not somehow later benefit a Petitioner when examining the merits of the case under the guise of "preponderance of the evidence." Here, Petitioner's challenge remains deficient, and Petitioner fails to show that the challenged claims are unpatentable by a preponderance of the evidence, for the reasons set forth in our Institution Decision (Inst. Dec. 21–23).[17] Nevertheless, we address additional deficiencies below.

[17] The claim charts support numerous combinations of the identified references, including some that do not rely on all three of Castello, Fujiwara, and Nishida. Those combinations requiring fewer than all of the cited references are not consistent with Petitioner's challenge. *See, e.g.*, Pet. 37; Pet. Supp. Br. 4.

3. Castello (Ex. 1007)

Castello describes a method of manufacturing a textile element, which includes mechanically-manipulating a yarn with a circular-knitting machine to form a cylindrical textile structure. Ex. 1007, Abstract, 1:35–2:4, 3:34–4:10, 4:22–5:44, 6:35–58, 7:1–5, Figs. 1, 2A, 2–5; *see* Ex. 1003 ¶¶ 145, 148–149. Castello's Figure 1 is reproduced below.

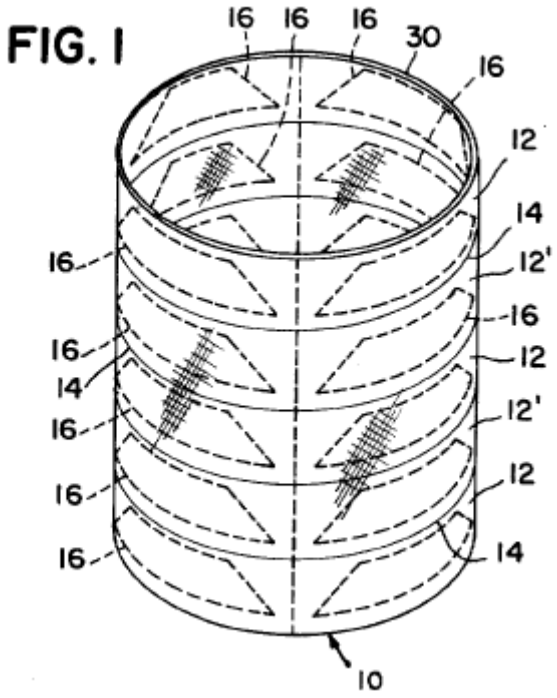

Figure 1 is a perspective view of a tubular cloth, knit on a circular knitting machine, to produce knitted collars. Ex. 1007, 3:5–7. In Figure 1, textile elements, i.e., collar constructions 16, are located in different portions of the textile structure, i.e., tubular knitted cloth 10. *Id.* at 3:39–45, Fig. 1; *see* Ex. 1003 ¶¶ 154–155. The textile elements are removed from the textile structure and incorporated into shirts worn by men, women, and children. Ex. 1007, 3:67–4:4, 4:38–45, 4:67–5:17; *see* Ex. 1003 ¶¶ 145, 148. Castello recognizes the benefits of using wide-tube circular knitting machines to

produce a web containing textile elements with complex stitch configurations, which were removed from the web and incorporated into finished garments. *See* Ex. 1007, 1:43–49; Ex. 1003 ¶ 148. Castello explains that textile elements, such as collars, having a variety of features like knitted folding creases, knitted sewing marks, mock fashion marks, and Jacquard multi-color designs, were produced independently on one or more slow producing flatbed machines. Ex. 1007, 1:12–32. With the advent of single needle selection controlled by programmable patterns, those features could be achieved on a single circular machine and knit simultaneously. *Id.* at 1:39–53, 2:12–21, 3:35–44; *see* Ex.1003 ¶ 148.

4. Fujiwara (Ex. 1008)

Fujiwara describes a method of manufacturing a textile element, which includes mechanically-manipulating a yarn with a circular knitting machine to form a cylindrical textile structure. Ex. 1008, 2:31–37; *see* Ex. 1003 ¶ 157. Fujiwara's Figure 1 is reproduced below.

Fig. 1

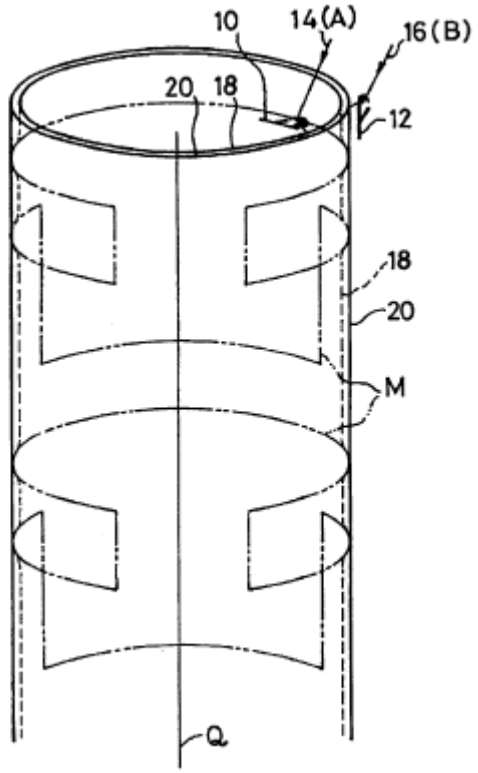

Figure 1 is a schematic perspective view illustrating a double tube fabric, having inner and outer tubular fabrics. Ex. 1008, 3:23–25. In Figure 1, the textile elements, identified by garment outlines M, are located in different portions of the textile structure having layers 18 and 20. *Id.* at 4:66–5:4.

> Along the outline M of a necessary width, the inner and outer tubular layers 18 and 20 are connected or stitched with each other, so that . . . both layers 18 and 20 are integrated. As a result, when the fabric is cut outwardly along the outline while stitched parts are at least partially left, a garment can be obtained, which has a front and back bodies, which are connected along the outline M. The stitching between the inner and outer layers along the outline M is obtained by a knitting by using both of the dial needles 10 and the cylindrical needles 12.

Id. at 5:4–13; *see id.* at Abstract.

Fujiwara's Figure 4 is reproduced below.

Fig. 4

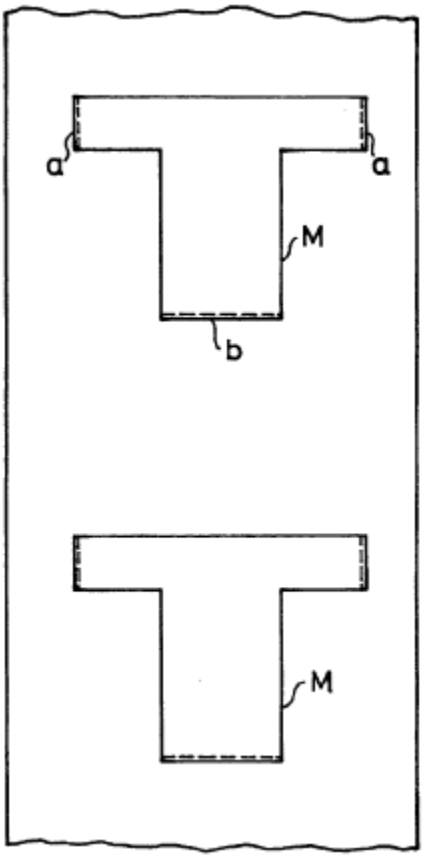

Figure 4 illustrates, schematically, a length of the fabric after the cutting of the tubular fabric along its longitudinal direction. *Id.* at 3:30–32. In Figure 4, a continuous length of fabric including the closed stitched lines M is obtained by cutting cylindrical textile structure of Figure 1 along line Q. *Id.* at 6:12–16; *see* Ex. 1003 ¶ 158. The fabric then is cut along stitched lines M to remove "*a garment (sweater)* having a front body and a back bodies, which are stitched with each other." Ex. 1008, 6:20–22 (emphasis added); *see id.* at Abstract ("A cutting of the fabric along the closed outline is done in such a manner that the stitched parts are, at least partially left."); Ex. 1003 ¶ 158. Subsequently,

> the cutting at locations of the garments such as sleeves and a hemline is such that cutting lines are located completely inward of the stitched part as shown by dotted lines a and b. As a result, at these portions at the sleeve and the hemline or base, the upper and lower layers of the fabric are separated, thereby providing openings at the sleeves and the hemline, which allows portions of human body (arm and body) to be passed through the openings.

Ex. 1008, 6:23–30; *see id.* at 6:30–42 (discussing garment finishing as depicted in Figs. 5A and 5B). As Petitioner explains,

> Fujiwara also identifies that "sewing is a bottleneck from the view point of increase in an production efficiency as well as of decrease in a production cost" such that "there has heretofore been a strong requirement as to a development in a garment making by which any sewing is not necessary."

Pet. 36 (quoting Ex. 1003 ¶ 204).

5. Petitioner's Arguments

Petitioner argues that the combination of Castello, Fujiwara, and Nishida teaches or suggests all of the limitations of claims 1–9, 11–19, and 21 of the '749 patent. Pet. 33–56. In particular, Petitioner argues that Castello, Fujiwara, and Nishida teach or suggest all of the limitations of each of independent claims 1 and 13. *Id.* at 37–44 (claim 1), 45–46 (claim 13). Because each of the challenged dependent claims depends from claim 1 or 13, we focus our analysis of Petitioner's challenge on those independent claims.

Patent Owner opted to forego filing a Supplemental Patent Owner Response addressing Petitioner's challenges to claims 1–9, 11–19, and 21 based on the combined teachings of Castello, Fujiwara, and Nishida and to forego deposing Petitioner's declarant regarding this challenge. Paper 23,

10. Consequently, other than those contentions presented in the Patent Owner's supplemental briefing (Paper 25), Patent Owner is deemed to have waived any arguments for the patentability of claims 1–9, 11–19, and 21 over the combined teachings of Castello, Fujiwara, and Nishida. *See* Paper 7, 6. Nevertheless, Petitioner bears the ultimate burden of persuasion of obviousness on this ground, and we consider all record evidence of obviousness and non-obviousness in determining whether Petitioner has met that burden. *In re Magnum Oil Tools Int'l, Ltd.*, 829 F.3d 1364, 1376 (Fed. Cir. 2016); *see* Pet. Supp. Br. 2–3.

a. Mapping Independent Claims 1 and 13 on Castello, Fujiwara, and Nishida

Independent claim 1 recites "[a] method of manufacturing an article of footwear." Ex. 1001, 11:43; *see also id.* at 12:27 (claim 13). Castello teaches "a novel method of fabricating *knitted collars* on circular knitting machines." Ex. 1007, 1:39–40 (emphasis added). Similarly, Fujiwara teaches "a circular knitted fabric as a first embodiment of the present invention, from which fabric *a garment such as a sweater* is obtained without necessitating any subsequent sewing process." Ex. 1008, 3:45–48 (emphasis added). Although neither Castello nor Fujiwara expressly teaches use of circular knitting machines to manufacture an article of footwear, both references generally describe use of circular knitting machines to manufacture "garments." *See* Pet. Supp. Br. 5. As noted above, although Reed specifically identifies stockings and hosiery, e.g., footwear, as garments manufactured by circular knitting (Ex. 1006, 1:33–35, 5:57–58), Reed does not describe shoes expressly as "garments." *See supra* Section II.C.4.a. Despite Castello's and Fujiwara's lack of express teachings

regarding the manufacture of footwear, Petitioner asserts that each of the three cited references teaches the preamble of claims 1 and 13. Pet. 37–38 (claim 1), 45 (claim 13). Nishida teaches processes for manufacturing footwear and that the webs of material depicted in its Figures 1 and 2 are "produced by a *conventional* textile process, [for] example, by weaving *and/or knitting* and/or embroidering." Ex. 1009, 3:6–9 (emphases added); *see* Ex. 1003 ¶ 151. Thus, we are persuaded that Petitioner has shown that Castello, Fujiwara, or Nishida teaches or suggests "[a] method of manufacturing an article of footwear."

The method of claim 1 further comprises the step of "*simultaneously* knitting a textile element with a surrounding textile structure." Ex. 1001, 11:45–46 (emphasis added); *see also id.* at 12:29–34 (claim 13 reciting "knitting a first textile element and a second textile element *simultaneously* with knitting a surrounding textile structure, the first knitted textile element located within a first portion of the knitted textile structure, the second knitted textile element located within a second portion of the knitted textile structure" (emphasis added)). As noted above, each of Castello and Fujiwara teaches the use of circular knitting machines to produce a cylindrical textile structure, from which textile elements may be produced. Ex. 1007, Fig. 1; Ex. 1008, Fig. 1. Petitioner relies on any or all of Castello, Fujiwara, and Nishida to teach or suggest this limitation. Pet. 39–41; *see id.* at 15–16 (citing to Nishida for this limitation), 45 (citing the claim chart for claim 1 with respect to claim 13); *but see id.* at 34–35 (discussing Castello's teaching of this limitation); Pet. Supp. Br. 5–6 (discussing Castello's and Nishida's teaching of the corresponding limitations of claims 1 and 13). We are persuaded that each of Castello, Fujiwara, and Nishida teaches this

limitation.[18] *See* Ex. 1003 ¶¶ 133, 154–157. During the supplemental hearing, however, Petitioner mapped this limitation onto Castello only. *See* Supp. Tr. 14:16–16:22 (discussing Ex. 1018, 3 (color coded mapping of limitations and applied art)).

The method of claim 1 further comprises the limitation "the knitted textile element *having at least one knitted texture that differs from a knitted texture in the surrounding knitted textile structure*." Ex. 1001, 11:46–48 (emphasis added); *see also id.* at 12:35–39 (claim 13 recites "varying at least one of the types of stitches or the types of yarns in the knitted textile structure *to impart a texture to the first and second knitted textile elements different from a texture of the knitted textile structure extending between the first and second portions*" (emphasis added)). Petitioner argues that:

> Castello describes using two different stitch configurations, which would give a different texture. [Ex. 1007], 7:5-9. Fujiwara builds on this disclosure, by describing multiple different types of interknitted stitches (e.g., jacquard, birds eye, eyelet, circular rib, or interlock stitch) to provide a different texture. [Ex. 1008], 5:57-6:7. Yet again, the Board has already found that Nishida discloses this claim element. *See* [1st FWD] 26.

Pet. Supp. Br. 6; *see* Pet. 42–44 (claim 1), 46 (claim 13). During the supplemental hearing, however, Petitioner mapped this limitation onto Fujiwara only. *See* Supp. Tr. 14:16–16:22 (discussing Ex. 1018, 3 (color coded mapping of limitations and applied art)).

The method of claim 1 further comprises the step of "removing the knitted textile element from the surrounding knitted textile structure."

---

[18] In our analysis of the challenge based on the combined teachings of Reed and Nishida, we were persuaded that Nishida teaches or suggests this limitation. *See supra* Section II.C.4.a.

Ex. 1001, 11:49–50; *see also id.* at 12:40–41 (claim 13 recites "removing the first and second knitted textile elements from the knitted textile structure"). Because the recited "textile structure" may be manufactured on a circular knitting machine (*id.* at 12:7–9 (claim 9), 64–67 (claim 19)), we are persuaded based on the evidence cited in the Petition that Petitioner has shown that the teachings of Castello or Fujiwara, alone, *or* the teachings of Castello and/or Fujiwara combined with those of Nishida, teach or suggest this limitation of the independent claims. Pet. 39 (citing Ex. 1003 ¶¶ 155, 157); *see id.* at 44 (claim 1; citing, *e.g.*, Ex. 1007, 3:67–4:4; Ex. 1008, 5:7–11; Ex. 1009, 1:10–18 (*see* claim chart at Pet. 18–19)), 46 (claim 13).

Finally, the method of claim 1 comprises the step of "*incorporating* the knitted textile element *into* [an upper of] the article of footwear." Ex. 1001, 11:51–52 (emphases added); *see id.* at 12:42–43 (claim 13: "incorporating at least one of the first and second knitted textile elements into the article of footwear"). Petitioner relies solely on Nishida to supply this limitation, and argues that Nishida teaches this limitation of the independent claims. Pet. 44, 46 (citing to *id.* at 19 (claim 1), 21 (claim 13), respectively); Pet. Supp. Br. 6; *see* Ex. 1003 ¶¶ 96, 161; *see also* Ex. 1018, 3 (color coded mapping of this final limitation on Nishida). We agree. *See supra* Section II.C.4.a.

b. Dependent Claims 2–9, 11, 12, 14–19, and 21

With respect to the challenged dependent claims, we understand that Petitioner argues that Castello, Fujiwara, *and* Nishida teach or suggest the additional limitations recited in claim 2 (Pet. 45); in claims 3, 4, and 14 (*id.* at 46–47); in claim 8 (Pet. 51–52 ("The chart below shows how Castello, Fujiwara, and Nishida *collectively* disclose the features of claim 8, and thus

renders claim 8 obvious." (emphasis added)); and in claims 11 and 12 (*id.* at 56; *see* Ex. 1003 ¶¶ 177–186). We understand Petitioner further argues that Castello, Fujiwara, *or* Nishida teaches or suggests the additional limitations recited in in claims 5 and 15. Pet. 47–48 (discussing the teachings of each reference separately); *see id.* at 48–49 (claim chart listing all references); Ex. 1003 ¶¶ 165–167 (separately discussing each reference's teaching of the recited limitations). Similarly, we understand Petitioner argues that Castello, Fujiwara, *or* Nishida teaches or suggests the additional limitations recited in in claims 6 and 16. Pet. 49–50 (discussing the teachings of each reference separately); *see id.* at 50 (claim chart listing all references); Ex. 1003 ¶¶ 188–190 (separately discussing each reference's teaching of the recited limitations). We further understand that Petitioner argues that Nishida teaches or suggests the additional limitations recited in claims 7, 12, 17, and 18 (Pet. 50–51, 56; *see* Ex. 1003 ¶¶ 190–191, 193), and that Castello teaches or suggests the additional limitations recited in claims 9 and 19 (Pet. 55–56; *see* Ex. 1003 ¶¶ 152–153). Petitioner's declarant provides a detailed mapping of the limitations of each of these dependent claims onto the teachings of Castello, Fujiwara, and/or Nishida. *See* Ex. 1003, App'x A.

c. Reason to Combine

Petitioner argues that a person of ordinary skill in the art would have had reason to combine the identified teachings of Castello, Fujiwara, *and* Nishida to achieve the methods recited in independent claims 1 and 13. Pet. 35–37. Initially, Petitioner argues that

> the skilled person would have been motivated to modify Castello's process to incorporate additional computerized advances in independent needle selection with a double layer circular knitting machine, such as the type described in

> Fujiwara, for independent needle selection at both the dial and cylinder needles as a way to increase the options for combining even more features simultaneously in a knitted textile element. (Ex. 1003, ¶201.) Furthermore, the skilled person would have been motivated to use Castello's process to produce textile elements for all types of clothing, including forming textile elements to be incorporated into footwear as described in Nishida. (Ex. 1003, ¶201.)

Pet. 35. In particular, Petitioner argues that, "as all three processes are directed to methods of simultaneously forming textile elements within a surrounding textile structure using programmable and/or computerized single needle selection technology, removing the textile elements, and incorporating the textile elements into a wearable item," a person of ordinary skill in the art would have found these references analogous. *Id.* at 36; *see* Ex. 1003 ¶ 202. Further, Petitioner argues that, because each of Castello, Fujiwara, and Nishida teaches the advantages of reducing cost through the use of computer-controlled knitting machines, a person of ordinary skill in the art would have had reason to combine their teachings. Pet. 36–37; *see* Ex. 1003 ¶¶ 203–205. Finally, Petitioner argues that

> a person of ordinary skill in the relevant art would certainly have been motivated *to modify Castello's method to include the additional features described by Fujiwara and Nishida* to produce a textile element for use in a shoe upper, as well as to produce a shoe incorporating such a textile element, as this is nothing more than combining "prior art elements according to known methods to yield predictable results" and/or the "[u]se of known technique[s] to improve similar devices (methods, or products) in the same way."

Pet. 37 (emphasis added) (citing *KSR*, 550 U.S. at 417–22); *see* Ex. 1003 ¶¶ 206–207.

Moreover, Petitioner argues that a person of ordinary skill in the relevant art would have had at least the same reasons to combine the teachings of Castello, Fujiwara, and Nishida to achieve the methods recited in these dependent claims, as those given for combining the teachings of Castello, Fujiwara, and Nishida to achieve the recited methods of the independent claims. *See* Pet. Supp. Br. 7–10.

We have reviewed the entirety of Petitioner's arguments and evidence for independent claims 1 and 13, as well for dependent claims 2–9, 11, 12, 14–19, and 21, and the cited supporting testimony of Mr. Holden. As noted above, Petitioner relies on the same reasons to combine the teachings of Castello, Fujiwara, and Nishida for its challenges to each of claims 1–9, 11–19, and 21 of the '749 patent. *See* Pet. 33–56.

Assuming that Petitioner intended to argue that a combination of the teachings of Castello, Fujiwara, and Nishida, as described in Petitioner's Supplemental Brief, renders independent claims 1 and 13 unpatentable, we are not persuaded that Petitioner has shown an adequate reason to combine the teachings of these three references by a preponderance of the evidence. Pet. Supp. Br. 5–6; *see WhatsApp, Inc. v. TriPlay, Inc.*, Appeal Nos. 2017-2549, 2017-2551, 2018 WL 5962733, at *4 (Fed. Cir. Nov. 14, 2018) (non-precedential); Supp. Tr. 16:23–17:15. As noted above, Petitioner argues that

> a person of ordinary skill in the relevant art would certainly have been motivated to modify Castello's method to include the additional features described by Fujiwara and Nishida to produce a textile element for use in a shoe upper, as well as to produce a shoe incorporating such a textile element.

Pet. 37.

Fujiwara explains that "[a]ccording to the present invention, said article is a garment, and said one side is a front body of the garment while said other is a back body of the garment." Ex. 1008, 2:7–9, 23–25, 63–65; *see* Ex. 1008, Abstract, 3:14–18, 6:20–22; Ex. 1003 ¶ 158. In particular, Fujiwara discloses that:

> In [Fujiwara's] FIG. 1, a closed phantom line M indicates, in a very schematic manner, an outline of a sweater as a garment wherein one of the inner and outer layers 18 and 20 becomes one side (front body) of the sweater while the other of the inner and outer layers 18 and 20 becomes the other side (back body) of the sweater. Along the outline M of a necessary width, *the inner and outer tubular layers 18 and 20 are connected or stitched with each other, so that the both of the layers 18 and 20 are integrated*.

Ex. 1008, 4:66–5:7 (emphasis added); *see* Pet. 40–41 (citing Ex. 1008, 4:66–5:7, Figs. 1, 4 with respect to claim 1); *see also* Pet Supp. Br. 7 (citing Ex. 1008, 4:66–5:7 with respect to claims 3, 4, and 14). Thus, Petitioner relies on Fujiwara's teachings of a *pre-seamed* garment produced on a circular knitting machine. Pet. 40–41 (citing Ex. 1008, 2:31–37, 4:66–5:7, Figs. 1, 4).

Nishida and Castello, however, teach *unseamed* garments or portions of garments. As discussed above with respect to the combination of Reed and Nishida, Patent Owner contends that Nishida's web of material has two primary components: a backing and one or more layouts printed on or produced in the backing. PO Resp. 29 (citing Ex. 1009, 1:40–2:53, 3:6–26). The backing may be formed prior to the production of the layouts. *Id.* After the backing is formed, Nishida teaches printing on or producing layouts in the backing. Ex. 1009, 3:13–15. The layouts are printed by a fabric printing process onto the backing or produced by a textile production process inside

the backing. PO Resp. 29 (citing Ex. 1009, 1:50–56, 2:20–26, 3:13–15, 5:45–52); *see* Reply 9. "[T]he material can be woven or knitted in two or more layers or can be especially thick or additionally embroidered." Ex. 1009, 3:67–4:1. Referring to Nishida's Figure 3, "[a]fter cutting out layout 2 from the web of material 1, the edges 7 and 8 are stitched together and a heel seam thus is formed." *Id.* at 3:31–33.

As noted above, Castello teaches using wide-tube circular knitting machines to produce a web containing textile elements with complex stitch configurations, which were removed from the web and incorporated into finished garments. *See* Ex. 1007, 1:43–49; Ex. 1003 ¶ 148. In particular, Castello teaches:

> knitting a tubular fabric including a plurality of circular layers in vertical juxtaposition wherein each layer contains a plurality of individual collars, separating the layers and cutting the knit fabric to sever the collars *and then sewing the sides of the collars to produce a plurality of collars suitable for attaching to a shirt or sweater garment*.

Ex. 1007, Abstract (emphasis added).

As noted above, Fujiwara's teachings, relied upon by Petitioner, describe the pre-seaming of garments or sections of garments before their removal from the cylindrical textile structure. As Petitioner's declarant testifies,

> Fujiwara also identifies that "sewing[, i.e., seaming,] is a bottleneck from the view point of increase in an production efficiency as well as of decrease in a production cost" such that "there has heretofore been a strong requirement as to a development in a garment making by which any sewing is not necessary."

Pet. 36 (quoting Ex. 1003 ¶ 204). The teachings of Nishida, relied upon by Petitioner, do not teach pre-seaming but, instead, teach the seaming of the

upper layout *after* its removal from the web of material. Ex. 1009, 4:19–30 (Figs. 2 and 3), 5:3–26 (Figs. 4 and 5); *see* Pet. 32 ("Nishida describes '***stitching parts of the layout*** of the cut-out unit on provided seams **to form an upper of the shoe shaped part** . . . .' **Nishida**, 6:36–38 (emphasis added)."); *see also* Pet. at 19 (referring to Ground 1). Similarly, the teachings of Castello, relied upon by Petitioner, do not teach pre-seaming but, instead, teach the seaming of the collars to another suitable garment. Petitioner fails to explain why and how a person of ordinary skill in the art would have combined the teachings of Nishida and Castello regarding unseamed garment portions with the teachings of Fujiwara regarding pre-seamed garments. *See supra* Section II.C.5.c.ii. (discussing combination of the teachings of Reed's pre-seamed garments and Nishida's unseamed garments).

Further, as noted above, "combinations that change the 'basic principles under which the [prior art] as designed to operate,' or that render the prior art 'inoperable for its intended purpose,' may fail to support a conclusion of obviousness." *Plas-Pak*, 600 F. App'x at 758. We find that the intended purpose of Fujiwara's methods is to produce pre-seamed, substantially finished garments. Ex. 1008, 1:53–55 ("The present invention aims, thus, *to eliminate substantially sewing*, also, in a garment making from a circular knitted fabric." (emphasis added)), 3:14–18 ("[A]ccording to the method invention, an article or garment can be obtained from a fabric *without or substantially without necessitating any sewing process*, which otherwise is essential, thereby reducing a production cost of an article or garment from a fabric." (emphasis added)). Castello, however, teaches that "[t]he collars are cut along the designed cut marks, *the sides are sewn to*

create finished side edges by using a conventional overedging machine, such as a Merrow sewing machine or other similar, well known, sewing machine" and then are attached to other garments. Ex. 1007, 1:68–2:4 (emphasis added); *see id.* at Abstract. Similarly to Castello, Nishida teaches, "[a]fter cutting out layout 2 from the web of material 1, the edges 7 and 8 are stitched together and a heel seam thus is formed." Ex. 1009, 3:31–33. We determine that the record before us conveys that there is a fundamental difference in the manufacturing techniques for producing preseamed garment portions as compared with techniques producing unseamed garment portions. In that respect, it is difficult to reconcile, on this record, combining practices in which sewing is eliminated with teachings in which sewing is required. Petitioner proposes to modify Castello in view of Fujiwara, and further in view of Nishida, but such a modification would change the principles under which Castello operates. *See* PO Resp. 41–46 (discussing change in intended purpose of due to combination of the teachings of Reed's pre-seamed garments and Nishida's unseamed garments).

d. Summary

Based on our review of the arguments and evidence presented by Petitioner regarding this ground, we conclude that Petitioner fails to demonstrate by a preponderance of the evidence that either of independent claims 1 and 13 is unpatentable as rendered obvious by the combined teachings of Castello, Fujiwara, and Nishida. Moreover, at least because Petitioner's arguments for the obviousness of dependent claims 2–9, 11, 12, 14–19, and 21 over Castello, Fujiwara, and Nishida rely on the arguments and evidence presented with respect to independent claims 1 and 13, we also conclude that Petitioner fails to demonstrate by a preponderance of the

evidence that any of the dependent claims is unpatentable as rendered obvious by the combined teachings of Castello, Fujiwara, and Nishida.

III. SUMMARY

We are not persuaded that Petitioner demonstrates by a preponderance of the evidence that any of claims 1–9, 11–19, and 21 of the '749 patent is rendered obvious over the combined teachings of Reed and Nishida[19] or those of Castello, Fujiwara, and Nishida.

IV. ORDER

It is, therefore,

ORDERED that, pursuant to 35 U.S.C. § 318(a), Petitioner fails to demonstrate by a preponderance of the evidence that any of claims 1–9, 11–19, and 21 is unpatentable as rendered obvious over the combined teachings of Reed and Nishida or those of Castello, Fujiwara, and Nishida; and

FURTHER ORDERED that, because this is a Final Written Decision, parties to the proceeding seeking judicial review of the decision must comply with the notice and service requirements of 37 C.F.R. § 90.2.

---

[19] Since the issuance of the initial Final Written Decision on October 19, 2017, Administrative Patent Judge Daniels has replaced Administrative Patent Judge Fitzpatrick on this panel. Administrative Patent Judge Fitzpatrick authored a concurring opinion offering an alternative reasoning for rejecting Petitioner's ground one challenge to claims 1–9, 11–19, and 21. 1st FWD 1–5 (concurring opinion). Because Administrative Patent Judge Fitzpatrick is no longer a member of the panel, we do not reproduce his concurring opinion here, but, to the extent required by the Federal Circuit's mandate, the concurring opinion is incorporated herein by reference.

PETITIONER:

Mitchell G. Stockwell
Vaibhav P. Kadaba
Tiffany L. Williams
KILPATRICK TOWNSEND & STOCKTON LLP
mstockwell@kilpatricktownsend.com
wkadaba@kilpatricktownsend.com
tiwilliams@kilpatricktownsend.com

PATENT OWNER:

Christopher J. Renk
Michael J. Harris
BANNER & WITCOFF, LTD
crenk@bannerwitcoff.com
mharris@bannerwitcoff.com