UNITED STATES PATENT AND TRADEMARK OFFICE

BEFORE THE PATENT TRIAL AND APPEAL BOARD

CELLCO PARTNERSHIP D/B/A VERIZON WIRELESS
Petitioner

v.

GENERAL ACCESS SOLUTIONS, LTD.
Patent Owner

IPR No. 2023-00978
U.S. Patent No. 7,230,931

DECLARATION OF DR. KEVIN C. ALMEROTH IN SUPPORT OF PETITION FOR INTER PARTES REVIEW OF U.S. PATENT NO. 7,230,931

PETITIONER NOKIA
Ex.1002

TABLE OF CONTENTS

CLAIM LISTING iv
I. Introduction 1
II. Experience and Qualifications 1
III. Understanding of Legal Principles 14
A. Claim Construction 14
B. Obviousness 15
IV. Summary of Materials Reviewed and Considered 17
V. Level of Skill in the Art and Perspective Applied in this Declaration 19
VI. Identification of Challenges 21
VII. Background 22
A. The ’931 Patent 22
B. The Prior Art at the Time of the ’931 Patent 25
C. The Sprint IPR 34
VIII. Claim Construction 34
IX. Ground 1: The Challenged Claims are Obvious Over Vornefeld in Combination with Atsuta 35
A. Vornefeld Applied To Claims 1 and 19 35
B. Vornefeld and Atsuta Applied to Claims 28 and 29 44
X. Ground 2: The Challenged Claims are Obvious Over Vornefeld in Combination with Goldburg 59
A. Goldburg 59
B. Motivation to Combine Vornefeld and Goldburg 62
C. Dependent Claim 28 65
D. Dependent Claim 29 69
XI. Ground 3: Claims 28 and 29 Are Obvious Over Youssefmir in Combination with Atsuta 70
A. Youssefmir 70
B. Motivation to Combine Youssefmir and Atsuta 74
C. Independent Claim 1 76

PETITIONER NOKIA
Ex.1002

D. Dependent Claim 28 86

E. Independent Claim 19 96

F. Dependent Claim 29 98

XII. Grounds 4 and 5: The Challenged Claims are Obvious Over Vornefeld and Atsuta, in Further View of Tangemann and Over Vornefeld and Goldburg, in Further View of Tangemann 99

A. Tangemann 99

B. Motivation to Combine Vornefeld and Tangemann 101

XIII. Secondary Considerations 105

XIV. Conclusion 106

PETITIONER NOKIA
Ex.1002

CLAIM LISTING

The following claim listing adds bracketed labels ([preamble], [a]], etc.) for reference:

1. [a] For use in a wireless access network comprising a plurality of base stations, each of said plurality of base stations capable of bidirectional time division duplex (TDD) communication with wireless access devices disposed at a plurality of subscriber premises in an associated cell site of said wireless access network,

[b] a transceiver associated with a first of said plurality of base stations comprising:

[c] transmit path circuitry associated with a beam forming network capable of transmitting directed scanning beam signals each directed to substantially only wireless access devices within a different one of a plurality of sectors of a cell site associated with said first base station,

[d] wherein said transmit path circuitry transmits, at a start of a TDD frame, a broadcast beam signal to wireless access devices within more than one of said sectors, the broadcast beam signal comprising a start of frame field, and

[e] subsequently transmits, in a downlink portion of said TDD frame, first downlink data traffic to substantially only wireless access devices within one of said sectors using one of said directed scanning beam signals.

19. [a] For use in a wireless access network comprising a plurality of base stations, each of said plurality of base stations capable of bidirectional time division duplex (TDD) communication with wireless access devices disposed at a plurality of subscriber premises in an associated cell site of said wireless access network, a method of communicating with a first of said plurality of base stations comprising the steps of:

[b] transmitting, at a start of a TDD frame, a broadcast beam signal to wireless access devices within more than one of a plurality of sectors within said associated cell site,

PETITIONER NOKIA
Ex.1002

[c] the broadcast beam signal comprising a start of frame field capable of synchronizing receivers in said wireless access devices; and

[d] transmitting, in a downlink portion of said TDD frame, first downlink data traffic to substantially only wireless access devices in a first of said sectors using a first directed scanning beam signal.

28. [preamble] The transceiver as set forth in claim 1

[a] wherein said transmit path circuitry transmits, in said downlink portion of said TDD frame, second downlink data traffic to substantially only wireless access devices within an other of said sectors using an other of said directed scanning beam signals.

29. [preamble] The method as set forth in claim 19

[a] further comprising: transmitting, in said downlink portion of said TDD frame, second downlink data traffic to substantially only wireless access devices in a second of said sectors using a second directed scanning beam signal.

PETITIONER NOKIA
Ex.1002

I. Introduction

1. I have been retained by Cellco Partnership d/b/a Verizon Wireless ("Petitioner") to provide my opinion concerning the claimed subject matter of U.S. Patent No. 7,230,931 (Ex. 1001 and henceforth referred to as "the '931 patent") in support of a Petition for Inter Partes Review of the '931 patent.

2. This Declaration summarizes the opinions I have formed to date. I reserve the right to modify my opinions, if necessary, based on further review and analysis of information that I receive subsequent to the filing of this report, including in response to positions taken by General Access Solutions ("GAS") or its experts that I have not yet seen, including any secondary consideration evidence that GAS or its expert may consider and present.

II. Experience and Qualifications

3. I am currently a Professor Emeritus in the Department of Computer Science at the University of California, Santa Barbara (UCSB). While at UCSB, I held faculty appointments and was a founding member of the Computer Engineering (CE) Program, Media Arts and Technology (MAT) Program, and the Technology Management Program (TMP). I also served as the Associate Director of the Center for Information Technology and Society (CITS) from 1999 to 2012. I have been a faculty member at UCSB since July 1997.

PETITIONER NOKIA
Ex.1002

4. I hold three degrees from the Georgia Institute of Technology: (1) a Bachelor of Science degree in Information and Computer Science (with minors in Economics, Technical Communication, and American Literature) earned in June 1992; (2) a Master of Science degree in Computer Science (with specialization in Networking and Systems) earned in June 1994; and (3) a Doctor of Philosophy (Ph.D.) degree in Computer Science (Dissertation Title: Networking and System Support for the Efficient, Scalable Delivery of Services in Interactive Multimedia System, minor in Telecommunications Public Policy) earned in June 1997. During my education, I have taken a wide variety of courses as demonstrated by my minor. My undergraduate degree also included a number of courses more typical of a degree in electrical engineering including digital logic, signal processing, and telecommunications theory.

5. One of the major concentrations of my research over the past 30+ years has been the delivery of multimedia content and data between computing devices, including various network architectures. In my research, I have studied large-scale content delivery systems, and the use of servers located in a variety of geographic locations to provide scalable delivery to hundreds or thousands of users simultaneously. I have also studied smaller-scale content delivery systems in which content is exchanged between individual computers and portable devices. My work has emphasized the exchange of content more efficiently across computer

PETITIONER NOKIA
Ex.1002

networks, including the scalable delivery of content to many users, mobile computing, satellite networking, delivering content to mobile devices, and network support for data delivery in wireless networks.

6. In 1992, the initial focus of my research was on the provision of interactive functions (*e.g.*, VCR-style functions like pause, rewind, and fast-forward) for near video-on-demand systems in cable systems; in particular, how to aggregate requests for movies at a cable head-end and then how to satisfy a multitude of requests using one audio/video stream broadcast to multiple receivers simultaneously. This research has continually evolved and resulted in the development of techniques to scalably deliver on-demand content, including audio, video, web documents, and other types of data, through the Internet and over other types of networks, including over cable systems, broadband telephone lines, and satellite links.

7. An important component of my research has been investigating the challenges of communicating multimedia content, including video, between computers and across networks including the Internet. Although the early Internet was used mostly for text-based, non-real time applications, the interest in sharing multimedia content, such as video, quickly developed. Multimedia-based applications ranged from downloading content to a device to streaming multimedia content to be instantly used. One of the challenges was that multimedia content is

PETITIONER NOKIA
Ex.1002

typically larger than text-only content, but there are also opportunities to use different delivery techniques since multimedia content is more resilient to errors. I have worked on a variety of research problems and used a number of systems that were developed to deliver multimedia content to users. One content-delivery method I have researched is the one-to-many communication facility called "multicast," first deployed as the Multicast Backbone, a virtual overlay network supporting one-to-many communication. Multicast is one technique that can be used on the Internet to provide streaming media support for complex applications like video-on-demand, distance learning, distributed collaboration, distributed games, and large-scale wireless communication. The delivery of media through multicast often involves using Internet infrastructure, devices and protocols, including protocols for routing and TCP/IP.

8. Starting in 1997, I worked on a project to integrate the streaming media capabilities of the Internet together with the interactivity of the web. I developed a project called the Interactive Multimedia Jukebox (IMJ). Users would visit a web page and select content to view. The content would then be scheduled on one of a number of channels, including delivery to students in Georgia Tech dorms delivered via the campus cable plant. The content of each channel was delivered using multicast communication.

PETITIONER NOKIA
Ex.1002

9. In the IMJ, the number of channels varied depending on the capabilities of the server including the available bandwidth of its connection to the Internet. If one of the channels was idle, the requesting user would be able to watch their selection immediately. If all channels were streaming previously selected content, the user's selection would be queued on the channel with the shortest wait time. In the meantime, the user would see what content was currently playing on other channels, and because of the use of multicast, would be able to join one of the existing channels and watch the content at the point it was currently being transmitted.

10. The IMJ service combined the interactivity of the web with the streaming capabilities of the Internet to create a jukebox-like service. It supported true Video-on-Demand when capacity allowed, but scaled to any number of users based on queuing requested programs. As part of the project, we obtained permission from Turner Broadcasting to transmit cartoons and other short-subject content. We also connected the IMJ into the Georgia Tech campus cable television network so that students in their dorms could use the web to request content and then view that content on one of the campus's public access channels.

11. More recently, I have also studied issues concerning how users choose content, especially when considering the price of that content. My research has examined how dynamic content pricing can be used to control system load. By

PETITIONER NOKIA
Ex.1002

raising prices when systems start to become overloaded (*i.e.*, when all available resources are fully utilized) and reducing prices when system capacity is readily available, users' capacity to pay as well as their willingness can be used as factors in stabilizing the response time of a system. This capability is particularly useful in systems where content is downloaded or streamed on-demand to users.

12. As a parallel research theme, starting in 1997, I began researching issues related to wireless devices and sensors. In particular, I was interested in showing how to provide greater communication capability to "lightweight devices," *i.e.*, small form-factor, resource-constrained (*e.g.,* CPU, memory, networking, and power) devices. Starting in 1998, I published several papers on my work to develop a flexible, lightweight, battery-aware network protocol stack. The lightweight protocols we envisioned were similar in nature to protocols like Bluetooth, Universal Plug and Play (UPnP) and Digital Living Network Alliance (DLNA).

13. From this initial work, I have made wireless networking—including ad hoc, mesh networks and wireless devices—one of the major themes of my research. My work in wireless networks spans the protocol stack from applications through to the encoding and exchange of data at the data link and physical layers.

14. At the application layer, even before the large-scale "app stores" were available, my research looked at building, installing, and using apps for a variety of

PETITIONER NOKIA
Ex.1002

purposes, from network monitoring to support for traditional computer-based applications (*e.g.*, content retrieval) to new applications enabled by ubiquitous, mobile devices. For example, my research has looked at developing applications for virally exchanging and tracking "coupons" through "opportunistic contact" (*i.e.*, communication with other devices coming into communication range with a user). In many of the courses I have taught there is a project component. Through these projects I have supervised numerous efforts to develop new "apps" for download and use across a variety of mobile platforms.

15. Toward the middle of the protocol stack, my research also looked to build wireless infrastructure support to enable communication among a set of mobile devices unaided by any other kind of network infrastructure. These kinds of networks are useful either in challenged network environments (*e.g.*, when a natural disaster has destroyed existing infrastructure) or when suitable support for network communication never existed. The deployment of such networks (or even the use of traditional network support) are critical to support services like disaster relief, catastrophic event coordination, and emergency services deployment.

16. Yet another theme is monitoring wireless networks, in particular different variants of IEEE 802.11 compliant networks, to (1) understand the operation of the various protocols used in real-world deployments, (2) use these measurements to characterize use of the networks and identify protocol limitations

PETITIONER NOKIA
Ex.1002

and weaknesses, and (3) propose and evaluate solutions to these problems. I have successfully used monitoring techniques to study wireless data link layer protocol operation and to improve performance by enhancing the operation of such protocols. For wireless protocols, this research includes functions like network acquisition and channel bonding.

17. Protecting networks, including their operation and content, has been an underlying theme of my research almost since the beginning of my research career. Starting in 2000, I have been involved in several projects that specifically address security, network protection, and firewalls. After significant background work, a team on which I was a member successfully submitted a $4.3M grant proposal to the Army Research Office (ARO) at the Department of Defense to propose and develop a high-speed intrusion detection system. Key aspects of the system included associating streams of packets and analyzing them for viruses and other malware. Once the grant was awarded, we spent several years developing and meeting the milestones of the project. A number of my students worked on related projects and published papers on topics ranging from intrusion detection to developing advanced techniques to be incorporated into firewalls. I have also used firewalls, including their associated malware detection features, in developing techniques for the classroom to ensure that students are not distracted by online content.

PETITIONER NOKIA
Ex.1002

18. My recent work ties some of the various threads of my past research together. I have investigated content delivery in online social networks and proposed reputation management systems in large-scale social networks and marketplaces. On the content delivery side, I have looked at issues of caching and cache placement, especially when content being shared and the cache has geographical relevance. We were able to show that effective caching strategies can greatly improve performance and reduce deployment costs. Our work on reputation systems showed that reputations have economic value, and as such, creates a motivation to manipulate reputations. In response, we developed a variety of solutions to protect the integrity of reputations in online social networks. The techniques we developed for content delivery and reputation management were particularly relevant in peer-to-peer communication and recommendations for downloadable "apps."

19. As an important component of my research program, I have been involved in the development of academic research into available technology in the market place. One aspect of this work is my involvement in the Internet Engineering Task Force (IETF). The IETF is a large and open international community of network designers, operators, vendors, and researchers concerned with the evolution of the Internet architecture and the smooth operation of the Internet. I have been involved in various IETF groups including many content

PETITIONER NOKIA
Ex.1002

delivery-related working groups like the Audio Video Transport (AVT) group, the MBone Deployment (MBONED) group, Source Specific Multicast (SSM) group, the Inter-Domain Multicast Routing (IDMR) group, the Reliable Multicast Transport (RMT) group, the Protocol Independent Multicast (PIM) group, etc. I have also served as a member of the Multicast Directorate (MADDOGS), which oversaw the standardization of all things related to multicast in the IETF. Finally, I was the Chair of the Internet2 Multicast Working Group for seven years.

20. My involvement in the research community extends to leadership positions for several academic journals and conferences. I am the co-chair of the Steering Committee for the ACM Network and System Support for Digital Audio and Video (NOSSDAV) workshop and on the Steering Committees for the International Conference on Network Protocols (ICNP), ACM Sigcomm Workshop on Challenged Networks (CHANTS), and IEEE Global Internet (GI) Symposium. I have served or am serving on the Editorial Boards of IEEE/ACM Transactions on Networking, IEEE Transactions on Mobile Computing, IEEE Network, ACM Computers in Entertainment, AACE Journal of Interactive Learning Research (JILR), and ACM Computer Communications Review. I have co-chaired a number of conferences and workshops including the IEEE International Conference on Network Protocols (ICNP), IEEE Conference on Sensor, Mesh and Ad Hoc Communications and Networks (SECON), International

PETITIONER NOKIA
Ex.1002

Conference on Communication Systems and Networks (COMSNETS), IFIP/IEEE International Conference on Management of Multimedia Networks and Services (MMNS), the International Workshop On Wireless Network Measurement (WiNMee), ACM Sigcomm Workshop on Challenged Networks (CHANTS), the Network Group Communication (NGC) workshop, and the Global Internet Symposium, and I have served on the program committees for numerous conferences.

21. Furthermore, in the courses I taught at UCSB, a significant portion of my curriculum covered aspects of the Internet and network communication including the physical and data link layers of the Open System Interconnect (OSI) protocol stack, and standardized protocols for communicating across a variety of physical media such as cable systems, telephone lines, wireless, and high-speed Local Area Networks (LANs). The courses I have taught also cover most major topics in Internet communication, including data communication, multimedia encoding, and mobile application design. My research and courses have covered a range of physical infrastructures for delivering content over networks, including cable, Integrated Services Digital Network (ISDN), Ethernet, Asynchronous Transfer Mode (ATM), fiber, and Digital Subscriber Line (DSL). For a complete list of courses I have taught, see my curriculum vitae (CV).

PETITIONER NOKIA
Ex.1002

22. In addition, I co-founded a technology company called Santa Barbara Labs that was working under a sub-contract from the U.S. Air Force to develop very accurate emulation systems for the military's next generation internetwork. Santa Barbara Labs' focus was in developing an emulation platform to test the performance characteristics of the network architecture in the variety of environments in which it was expected to operate, and, in particular, for network services including IPv6, multicast, Quality of Service (QoS), satellite-based communication, and security. Applications for this emulation program included communication of a variety of multimedia-based services, including video conferencing and video-on-demand.

23. In addition to having co-founded a technology company myself, I have worked for, consulted with, and collaborated with companies for nearly 30 years. These companies range from well-established companies to start-ups and include IBM, Hitachi Telecom, Turner Broadcasting System (TBS), Bell South, Digital Fountain, RealNetworks, Intel Research, Cisco Systems, and Lockheed Martin.

24. Through my graduate education, leadership with CITS, involvement in TMP, role in the development of the Internet2 infrastructure, and consulting with ISPs, I have gained a strong understanding in the role of the Internet in our society and the challenges of deploying large-scale production networking

PETITIONER NOKIA
Ex.1002

infrastructure. CITS, since its inception, has looked at the role of the Internet in society, including how the evolution of technology have created communication opportunities and challenges, including, for example through disruptive technologies like P2P. TMP looks to focus on non-purely technical issues, including, for example, state-of-the-art business methods, strategies for successful technology commercialization, new venture creation, and best practices for fostering innovation. Through my industry collaborations and Internet2 work, I have developed significant experience in the challenges of deploying, monitoring, managing, and scaling communication infrastructure to support evolving Internet services like streaming media, conferencing, content exchange, social networking, and e-commerce.

25. I am a Member of the Association of Computing Machinery (ACM) and a Fellow of the Institute of Electrical and Electronics Engineers (IEEE).

26. Additional details about my employment history, fields of expertise, courses taught, and publications are further included in my CV attached as Appendix A to this Report.

27. In reaching the opinions, I have considered the ’931 patent, its prosecution history, and the references below, and have also drawn as appropriate upon my own education, training, research, knowledge, and personal and professional experience.

PETITIONER NOKIA
Ex.1002

28. I am being compensated at my standard consulting rate of $800 per hour for my services. My compensation does not depend on the outcome of this review proceeding or of any pending litigation.

29. I have no direct financial interest in Cellco Partnership or Verizon. I have been informed that GAS claims ownership of the ’931 patent. I have no direct financial interest in GAS.

III. Understanding of Legal Principles

A. Claim Construction

30. I understand that claim construction in an Inter Partes Review is controlled by the standard in *Phillips v. AWH Corp*., 415 F.3d 1303 (Fed. Cir. 2005) (en banc).

31. I have been informed that claim construction begins with the language of the claims. The words are given their “ordinary and customary meaning,” which is “the meaning that the term would have to a person of ordinary skill in the art in question at the time of the invention, i.e., as of the effective filing date of the patent application.” The specification and prosecution history are sources of intrinsic evidence that informs the meaning of the claim language. Extrinsic evidence, such as expert testimony and dictionaries, may be useful in educating judges regarding the field of the invention or helping determine what a person of ordinary skill in

PETITIONER NOKIA
Ex.1002

the art ("POSA") would understand claim terms to mean. However, extrinsic evidence in general is viewed as less reliable than intrinsic evidence.

32. I understand that in this proceeding, any claim term that is not construed should be given its plain and ordinary meaning.

B. Obviousness

33. I understand that a prior art reference can render a patent claim obvious to one of ordinary skill in the art if the differences between the subject matter set forth in the patent claim and the prior art are such that the subject matter of the claim would have been obvious at the time the alleged invention was made. In analyzing obviousness, I understand that it is important to consider the scope of the claims, the level of skill in the relevant art, the scope and content of the prior art, the differences between the prior art and the claims, and any secondary considerations.

34. I understand that when the claimed subject matter involves combining pre-existing elements to yield no more than one would expect from such an arrangement, the combination is obvious. I also understand that in assessing whether the claimed subject matter is obvious, one must consider whether the claimed improvement is more than the predictable use of prior art elements according to their established functions. I understand that there need not be a precise teaching in the prior art directed to the specific subject matter of a claim

PETITIONER NOKIA
Ex.1002

because one can take account of the inferences and creative steps that a person of skill in the art would employ. I further understand that a person of ordinary skill is a person of ordinary creativity, not an automaton.

35. I understand that obviousness cannot be based on the hindsight combination of components selectively culled from the prior art. I understand that in an obviousness analysis, neither the motivation nor the avowed purpose of the inventors controls the inquiry. Any need or problem known in the field at the time of the invention and addressed by the patent can provide a reason for combining elements. For example, I understand that it is important to consider whether there existed at the time of the invention a known problem for which there was an obvious solution encompassed by the patent's claims. I understand that known techniques can have obvious uses beyond their primary purposes, and that in many cases a person of ordinary skill can fit the teachings of multiple pieces of prior art together like pieces of a puzzle.

36. I understand that, when there is a reason to solve a problem and there are a finite number of identified, predictable solutions, a person of ordinary skill has good reason to pursue the known options within his or her technical grasp. I further understand that, if this leads to the anticipated success, it is likely the product not of innovation but of ordinary skill and common sense, which bears on whether the claim would have been obvious.

PETITIONER NOKIA
Ex.1002

37. I understand that secondary considerations can include, for example, evidence of commercial success of the invention, evidence of a long-felt need that was solved by an invention, evidence that others copied an invention, or evidence that an invention achieved a surprising result. I further understand that such evidence must have a nexus or causal relationship to the elements of a claim, in order to be relevant. I am unaware of any such secondary considerations for the ’931 patent.

IV. Summary of Materials Reviewed and Considered

38. All of the opinions contained in this Declaration are based on the documents I reviewed, as well as my knowledge and professional judgment, through the lens of a POSA. In forming the opinions expressed in this Declaration, while drawing on my experience in the field of software applications for mobile devices, I reviewed the following documents.

Ex. No.	**Description**
1001	U.S. Patent No. 7,230,931 (the “’931 patent”)
1004	Ulrich Vornefeld et al., “SDMA Techniques for Wireless ATM,” IEEE Communication Magazine, November 1999 (“Vornefeld”)
1005	U.S. Patent No. 6,160,800 (“Atsuta”)
1006	U.S. Patent No. 6,154,661 (“Goldburg”)
1007	U.S. Patent No. 6,795,409 (“Youssefmir”)

PETITIONER NOKIA
Ex.1002

Ex. No.	Description
1008	Michael Tangemann, "Influence of the User Mobility on the Spatial Multiplex Gain of an Adaptive SDMA System," *5th IEEE International Symposium on Personal, Indoor and Mobile Radio Communications, Wireless Networks – Catching the Mobile Future*, The Hague, Netherlands, 1994 ("Tangemann")
1009	*Sprint Spectrum L.P. v. General Access Solutions, Ltd.*, IPR2017-01778, Paper 43 (P.T.A.B. Mar. 7, 2019)
1010	*Sprint Spectrum L.P. v. General Access Solutions, Ltd.*, IPR2017-01778, Paper 61 (P.T.A.B. Jan. 29, 2021)
1011	*Sprint Spectrum L.P. v. General Access Solutions, Ltd.*, IPR2017-01778, Paper 25 (P.T.A.B. Aug. 3, 2018) (PO response)
1012	File History for U.S. Patent No. 7,230,931
1014	*Sprint Spectrum L.P. v. General Access Solutions, Ltd.*, IPR2017-01778, Paper 1 (P.T.A.B. July 28, 2017) (Sprint Petition)
1015	*Sprint Spectrum L.P. v. General Access Solutions, Ltd.*, IPR2017-01778, Paper 42 (P.T.A.B. July 28, 2017) (Sprint Petition) (Hearing Transcript)
1018	George McDaniel, IBM Dictionary of Computing (1994)
1019	Declaration of Sylvia D. Hall-Ellis, Ph.D.

39. My opinions are additionally guided by my appreciation of how a POSA would have understood the claims of the '931 patent at the time of the alleged invention, which I have asked to assume is just before the earliest priority date for the '931 patent (which I understand is January 19, 2001).

V. Level of Skill in the Art and Perspective Applied in this Declaration

40. I understand that most issues relating to validity (including obviousness) must be judged from the perspective of a person of ordinary skill in the relevant art, as I discuss below

41. The ’931 patent is directed to wireless communication systems, particularly such communications between a base station and devices disposed at subscriber premises.

42. In determining the level of ordinary skill, I have been asked to consider, for example, the types of problems encountered in the field, prior solutions to those problems, the rapidity with which innovations are made, the sophistication of the technology, and the educational level of active workers in the field. I have also looked at the level of skill adopted in a prior IPR. Ex. 1009, 8-9; Ex. 1010, 8-9. Taking those factors into consideration, a person of ordinary skill in the art at the relevant time would have a bachelor’s degree in computer science, electrical or computer engineering, or a related field, and at least 2 years of work or research experience in digital communications systems, such as wireless communications systems and networks, or equivalent, or a Master’s degree in electrical engineering, computer engineering, computer science or similar field. Additional education could compensate for less practical experience and vice versa. Through education and relevant work experience, the person of ordinary

PETITIONER NOKIA
Ex.1002

skill would have an understanding and familiarity with the development and operation of wireless communication systems. More education could replace a lower amount of experience and *vice versa*.

43. I would have qualified, at least, as a person of at least ordinary skill in the art as of the relevant timeframe, and also as of the earliest claimed January 19, 2001 priority date on the face of the ’931 patent. I have a sufficient level of knowledge, experience, and education to provide an expert opinion in the field of the ’931 patent.

44. While my own level of skill exceeded that of the ordinary level of skill in the art at the relevant timeframe, as I had earned my Ph.D. in computer science and had been working as a university professor, I am well-acquainted with the actual performance and capabilities of a person of ordinary skill in the art as defined above. This is because, during the relevant timeframe, I was teaching and working with graduate students and telecommunications professionals—so I was quite familiar with the skills that people with a range of experience had at the time.

45. My opinions in this Declaration are based on the perspective of a POSA as of the relevant timeframes discussed above, or somewhat before (approximately early 2001). This is true even if the testimony is stated in the present tense. Each of the statements below reflects my opinion based on my review of the documents listed in the table above.

PETITIONER NOKIA
Ex.1002

VI. Identification of Challenges

Ground 1: Claims 28 and 29 recite subject matter that would have been obvious to a POSA in view of Ulrich Vornefeld et al., "SDMA Techniques for Wireless ATM," IEEE Communication Magazine, November 1999 ("Vornefeld"; Ex. 1004) and U.S. Patent No. 6,160,800 ("Atsuta"; Ex. 1005).

Ground 2: Claims 28 and 29 recite subject matter that would have been obvious to a POSA in view of Vornefeld and U.S. Patent No. 6,154,661 ("Goldburg"; Ex. 1006).

Ground 3: Claims 28 and 29 recite subject matter that would have been obvious to a POSA in view of U.S. Patent No. 6,795,409 ("Youssefmir"; Ex. 1007) and Atsuta.

Ground 4: Claims 28 and 29 recite subject matter that would have been obvious to a POSA in view of Vornefeld, Atsuta, and Michael Tangemann, "Influence of the User Mobility on the Spatial Multiplex Gain of an Adaptive SDMA System," 5th IEEE International Symposium on Personal, Indoor and Mobile Radio Communications, Wireless Networks – Catching the Mobile Future, 1994 ("Tangemann"; Ex. 1008).

Ground 5: Claims 28 and 29 recite subject matter that would have been obvious to a POSA in view of Vornefeld, Goldburg, and Tangemann.

PETITIONER NOKIA
Ex.1002

VII. Background

A. The ’931 Patent

46. The ’931 Patent is directed to a fixed wireless communication system in which a base station provides wireless coverage to subscribers in a cell site. The base station transmits data to and receives data from wireless access devices disposed at a plurality of subscriber premises. Ex. 1001, Abstract, 5:11-31, Fig. 1. Fig. 1, below, shows the base station (110), the subscriber premises (121, 122, 123) with fixed, externally-mounted antennas (131, 132, 133, respectively).

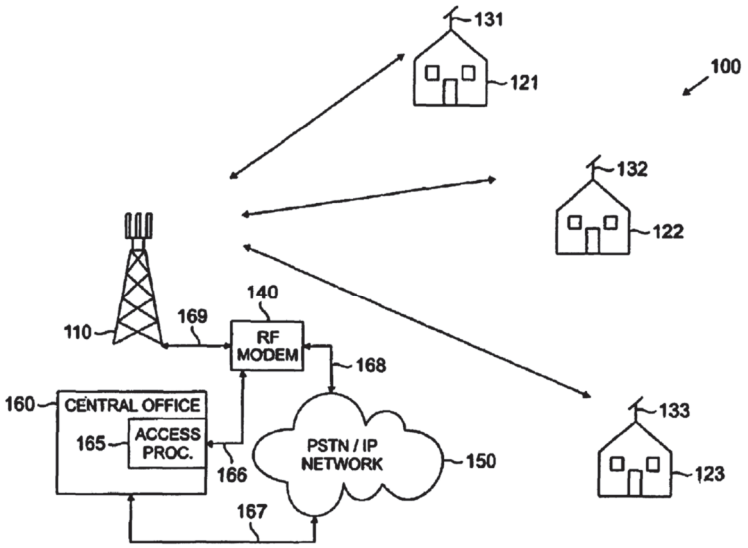

FIG. 1

Ex. 1001, Fig. 1.

47. As was already common in wireless systems by 2001 (as is acknowledged in the ’931 Patent’s background) various established media access control (MAC) techniques were employed to allow sharing of a wireless channel

across multiple users, a concept known as "multiple access." Ex. 1001, 5:32-58. These techniques included:

- frequency division multiple access (FDMA), which divides the frequency spectrum of the wireless channel into frequency bands assigned to respective users,
- time division multiple access (TDMA), which divides the wireless channel temporally into timeslots assigned to respective users, and
- space division multiple access (SDMA), which provides wireless multiple channels in different directions using antenna beam forming techniques. Ex. 1001, 5:32-52.

48. In order to support bidirectional communication between the base station and subscribers, the '931 Patent also utilizes time division duplexing (TDD), which separates uplink and downlink data into different timeslots on the same frequency channel. TDD operates like a "walkie-talkie," transmitting signals in both directions without overlapping. The '931 patent references existing approaches to providing duplexed multiple access in wireless systems by combining the TDD and TDMA techniques ("TDD/TDMA"). Ex. 1001, 6:42-58; 7:10-8:19. In that way, a wireless channel is divided by time for different users as well as for downlink and uplink transmissions for a particular user.

PETITIONER NOKIA
Ex.1002

49. The ’931 patent also describes dividing the cell area into “sectors” by having multiple directional antennas and RF modems at the base station, each corresponding to a respective sector. Ex. 1001, 9:23-28, 12:21-45, 16:8-18 (“Each RF modem uses an individual antenna to transmit and to receive in its assigned sector”). This sectorization was well known at the time, as described below.

50. In the transmission systems (*e.g.*, TDD/TDMA), the data structure defining a transmission is referred to as a “frame.” Ex. 1001, 7:21-24. Each frame is comprised of timeslots, with timeslots reserved for different subscribers in both the downlink and uplink direction. Frames were also well known in the art, and are described further below.

51. According to the ’931 Patent, its purported invention involved the use of, with TDD frames, a “beam forming network[1] capable of transmitting directed scanning beam signals in a sector of a cell site associated with … [a] base station.” Ex. 1001, 9:16-34.

52. In the operation described in the ’931 Patent, broadcast signals, or “beam signals,” are sent to “wireless access devices” in the cell area. At the start of

---

[1] The specification of the ’931 patent does not describe transmitting a second directed scanning beam signal to a second sector, though the same is recited in the Challenged Claims. Here, the claim elements are being addressed.

PETITIONER NOKIA
Ex.1002

each TDD frame, a beam signal comprising a "start of frame field" is sent to "more than one" sector. Ex. 1001, claim 1. The start of frame field contains various information such as how the remainder of the TDD frame is configured. Ex. 1001, 7:43-58, 14:50-59. Following this, during a downlink portion of the TDD frame, data is sent to one of the sectors, as recited in claim 1. With respect to the Challenged claims, in that same TDD frame, different downlink data is sent to another sector (claim 28).

53. In other words, the Challenged Claims are simply directed to the idea of transmitting to different sectors within the same frame, as opposed to in separate frames. As discussed above, and acknowledged in the '931 Patent, dividing cells into sectors and allocating resources to individual sectors was known in the art. Further, as established below, transmitting to different sectors of a cell in one TDD frame was also known in the art.

B. The Prior Art at the Time of the '931 Patent

1. Sectors

54. Sectorization was well known at the time of the '931 patent. The sectors described in the '931 patent are pre-defined by the transmission area of a corresponding antenna. Ex. 1001 ('931), 16:8-15 ("each sector of a cell site is served by an individual RF modem . . . Each RF modem uses an individual antenna to transmit and to receive in its assigned sector"), 28:1-13 ("Beam scanning pattern

PETITIONER NOKIA
Ex.1002

1210 covers a cell sector that is approximately 90 degrees wide"), Fig. 12A. This type of sectorization was known in the field. Ex. 1001, 8:12-19; Ex. 1005, 1:12-18 ("a fan-shaped beam antenna for sectoring a service area"); Ex. 1006, 4:6-20 ("broadcasting efficiently in the intended coverage region (*i.e.*, the sector) of the antenna array and associated electronics").

55. Directional antennas were used to improve signal quality between the base station and subscribers in a particular sector. Ex. 1007, 1:35-40 ("it is desirable to use directional antenna systems such as smart antenna systems to increase the signal-to-noise ratio of the communications link and reduce interference"). Directional antennas transmit and receive signals (in one direction) better than an equivalent omnidirectional antenna, just as a flashlight projects light in one direction better than a lantern. Directional antennas also reduce interference and allow frequency channels to be re-used because signals can be directed so they do not overlap. Ex. 1004, 52 ("allows different users to be served on the same frequency channel at the same time"); Ex. 1006, 17:35-54 ("It is desirable to be able to transmit the information directionally to such co-channel users (thus not causing interference between the co-channel users)").

56. I have been informed that Patent Owner may be taking a broader view of "sector", such that the term would apply to any geographic portion of the cell, rather than being defined by the transmission area of a corresponding antenna

PETITIONER NOKIA
Ex.1002

array. However, dividing the cell into discrete portions without regard to the transmission area of the base station antenna arrays was also well known at the time. Ex. 1006, 20:12-16 ("Partition the parameter space into a finite number of regions whose union is the entire space"); Ex. 1008, 746 ("dividing the cell into small minisectors"), Fig. 2. Dividing the cell site into portions of desired size could be used, for example, to calculate weight vectors in order to achieve a desired overall radiation pattern, or to determine the spatial distribution of subscribers in the cell. Ex. 1006, Abstract, 20:8-39; Ex. 1008, 745 ("taking into account a given angular user density distribution").

2. Frames

57. Frames, as a data structure in communications systems, were also well known. Frames have been used in wired communication systems prior to the application to wireless communication systems. An example definition of frame is "a data structure consisting of fields, predetermined by protocol, for transmission of user data and control data." Ex. 1018 (IBM Dictionary of Computing 1994), 285-286.

58. In the context of TDMA (where multiple users share a frequency channel, their respective signals being separated by time) and/or TDD (where downlink and uplink data are sent on the same frequency channel, separated by time) the frame fields are timeslots, each timeslot being assignable to, e.g., a

PETITIONER NOKIA
Ex.1002

different user for either downlink or uplink (the "user data" from the definition above), or to common information that is broadcast to multiple subscribers (the "control data" from the definition above). Ex. 1001, 7:21-8:11; Ex. 1004, Fig. 3; Ex. 1005, 3:64-4:5 ("time slots are assigned to the divided zones so that the time slots do not overlap"); Ex. 1006, 3:46-4:5 ("one timeslot is reserved for BCCH (broadcast control channel). Some of the other timeslots may be used for TCH (traffic channel) with one or more users"); Ex. 1007, 13:1-41 ("each frame is divided into a selected number of downlink data transfer periods (timeslot)").

59. Timeslots at the beginning of the frame can be assigned to common information intended for all subscribes, such as base station identification, timing, and synchronization data. Ex. 1004, 54 ("A MAC frame starts with two broadcast channels, the broadcast channel (BCH) and the frame channel (FCH)"), Fig. 3; Ex. 1006, 1:17-2:12 ("paging and control information is broadcast on what are called common control channels"), 12:11-24 ("time-slot 0 might contain a synchronization control channel burst"); Ex. 1007, 18:23-33 ("each signalling [sic] segment starts with a frame marker signal from the base station to synchronize all remote user terminals to the timing sequence of the base station"), 25:51-62 ("Each frame includes a signalling [sic] segment, for transmission and receipt of system overhead signals, such as cellular overhead, and a data transfer segment"), Fig. 5. This common information can be thought of like a drumbeat or metronome, lining

PETITIONER NOKIA
Ex.1002

up the timing of the subscribers and base station for the information to follow. Depending on the protocol, the common information may also include source and destination addresses, or information about the frame. By assigning the common information to timeslots at the beginning of the frame, the base station and subscribers can coordinate the transmission and receipt of the user data that follows.

60. By assigning subsequent timeslots to different subscribers, a single frame can transmit to, or receive from, multiple users on a single frequency channel, because the signals for different subscribers do not overlap in time, thus preventing interference. Ex. 1004, 55 ("If the interference exceeds a certain threshold because too many MTs are transmitting simultaneously, it becomes impossible to separate any signal at all. Therefore, another objective of the scheduling algorithm is to split up transmission constellations on the time axis"); Ex. 1005, 6:24-58 ("TDMA control circuit 9 . . . receives a plurality of modulated signals to be transmitted to the subscriber stations, arranges these signals into one signal sequence as a predetermined synchronous frame"). Like an air traffic controller that prevents two planes from using a runway at the same time, the frame ensures signals to different subscribers are not transmitted at the same time.

61. Frames thus serve to coordinate subscribers with the base station timing (*e.g.*, when to transmit and receive). They may also coordinate different

PETITIONER NOKIA
Ex.1002

base station antennas to each other. Specifically, rather than assigning one frame to each different antenna, the system may combine instruction for different antennas in one frame. Doing so may be used to avoid interference for a subscriber on the border of adjacent sectors. This interference can occur, for example, due to the shape of the antenna beams (example highlighted below in Vornefeld, Ex. 1004, Fig. 2), which may partially overlap near the border of two sectors such that a subscriber on the border receives transmissions from both antennas at the same time. To avoid this problem when using different frames for different sectors, the beams would need to be made not to overlap at all, which could lead to patchy coverage for subscribers located near the border of adjacent sectors.

PETITIONER NOKIA
Ex.1002

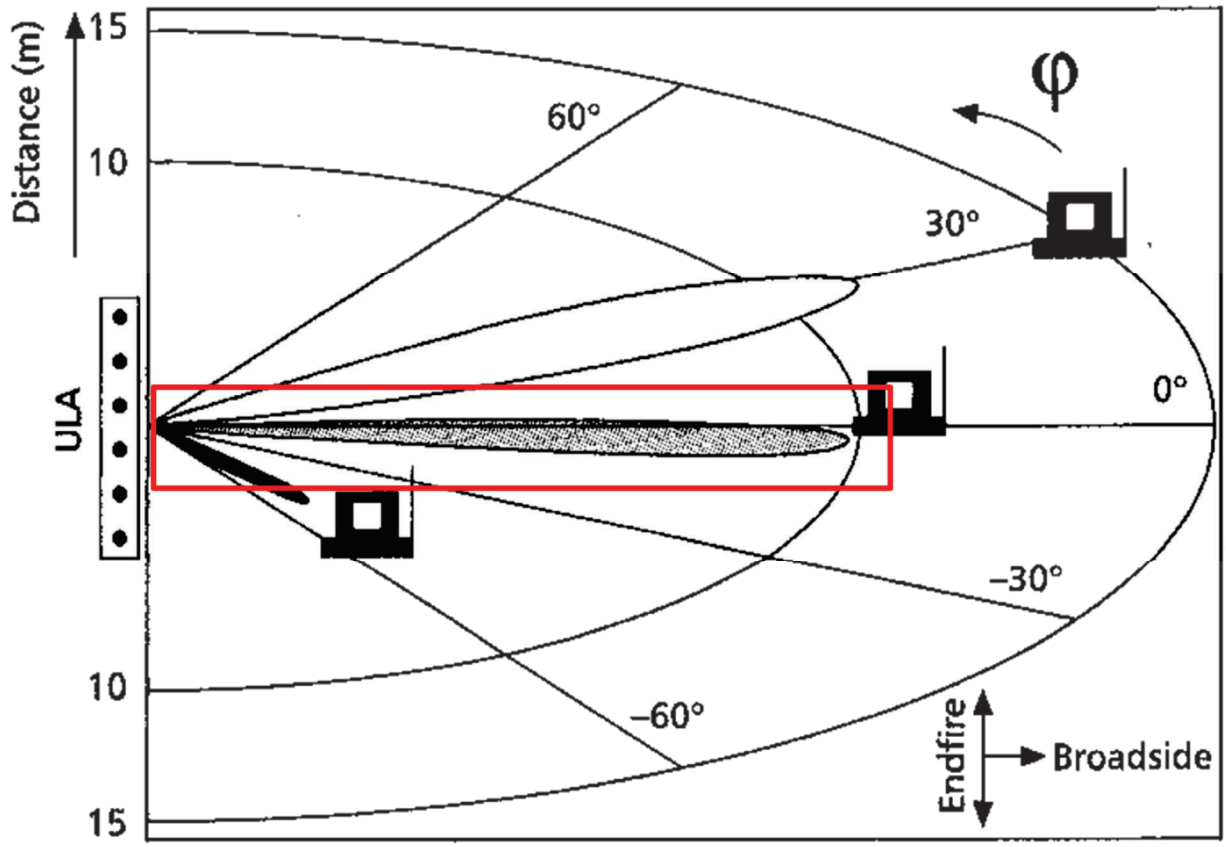

Ex. 1004, Fig. 2

62. Because common information is typically already being sent to all subscribers, antenna arrays for different sectors may operate off a single frame. In that case, the antenna arrays for different sectors operate from one frame such that timeslots in that frame may be assigned to different antenna arrays and subscribers. In this manner, antenna arrays for adjacent sectors can be assigned different timeslots so that they do not transmit simultaneously.

63. For context, Vornefeld describes broadcasting common information, labeled "BCH" (broadcast channel, conveying signaling information to subscribers

PETITIONER NOKIA
Ex.1002

in the entire cell, the figure below partially cuts off the label "BCH") and "FCH" (frame channel, used to transmit information about the structure of the frame).

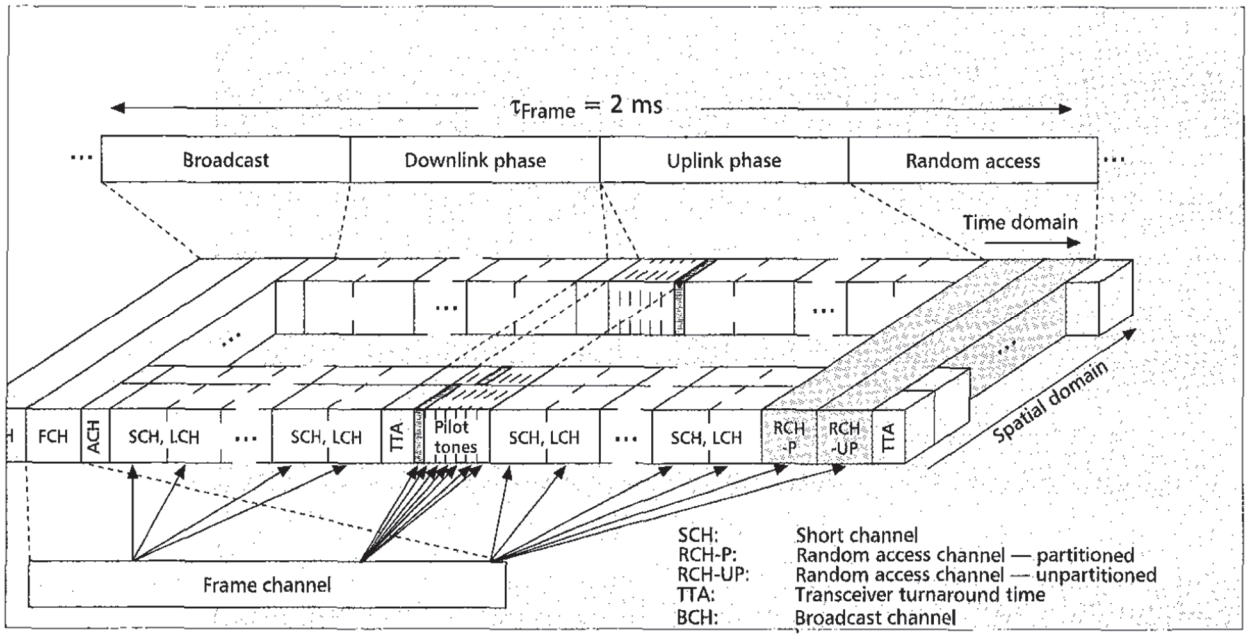

Ex. 1004, Fig. 3.

64. After this common information is broadcast, the rest of the timeslots are assigned to different subscribers for downlink and uplink. Ex. 1004, Fig. 3.

65. Atsuta describes using a single frame to assign timeslots to subscribers in different sectors. Ex. 1005, 6:24-54, Fig. 3.

PETITIONER NOKIA
Ex.1002

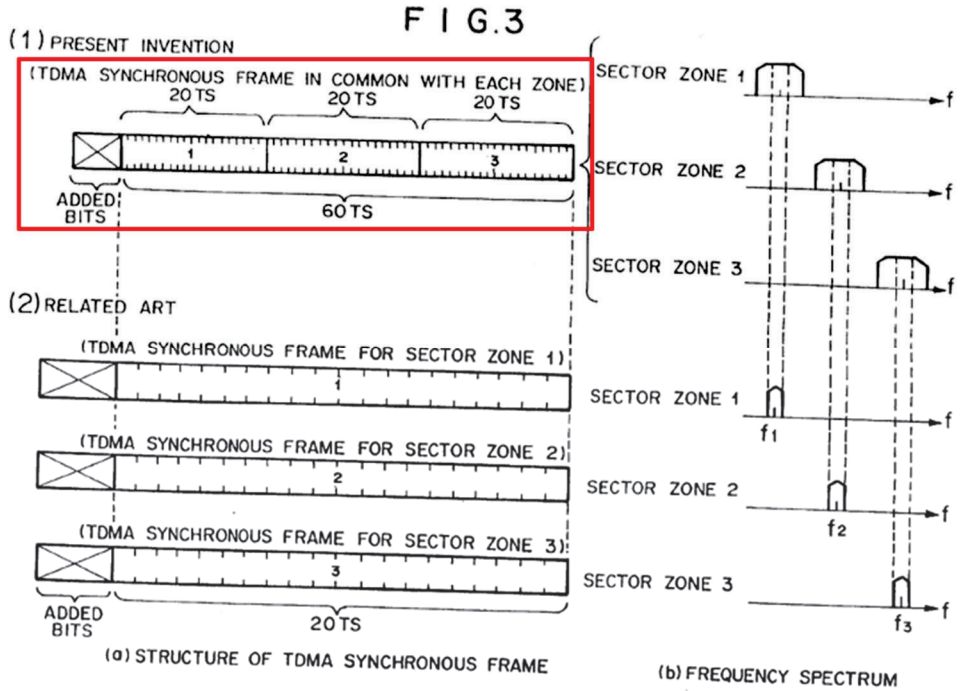

Ex. 1005, Fig. 3.

66. Atsuta describes the benefit of its system as allowing one signal processing apparatus to create a frame that all the antenna arrays can use, rather than each antenna array having a separate signal processing apparatus. Ex. 1005, 2:45-63 ("An object of the present invention is to share the same functional circuit so as to simpl[ify] the structure [of] the entire apparatus and reduce the size and power consumption thereof"). Simplifying the signal processing structure also allows for simpler design, easier maintenance, greater reliability, and easier scaling.

67. Using frame-structured transmissions in a sectorized cell was known in the art, as were the benefits of their combination: allowing frequency channels to be reused, mitigating interference between subscribers, synchronizing

subscribers in different sectors with the base station, coordinating the antenna arrays with each other, and simplifying the signal processing apparatus.

C. The Sprint IPR

68. I understand that the ’931 Patent was reviewed in a prior IPR filed by Sprint. I also understand that the that Sprint IPR ultimately resulted in a decision finding claims 1-27 unpatentable. Ex. 1009, 32 (finding claims 1, 10, and 19 unpatentable); Ex, 1010, 26 (finding claims 2-9, 11-18, and 20-27 unpatentable on remand from the Federal Circuit). I further understand that Patent Owner conceded the unpatentability of independent claims 1, 10, and 19 in light of Vornefeld (resulting in an adverse judgment on those claims). Ex. 1009, 7. I agree that Vornefeld teaches the features of at least claims 1 and 19. Regarding claims 28 and 29, I understand that the Board determined that Sprint had not met its burden with respect to the claimed sending of “first downlink data” and “second downlink data” within the same TDD frame. With respect to Vornefeld, the Board’s view was that Sprint had not established that Vornefeld anticipated “using different beams in the same TDD frame.” Ex. 1009, 23. Thus, those two claims survived.

VIII. Claim Construction

69. With respect to the term “sector,” I have been informed that GAS has implied that the same refers to just “a portion of a cell site.” I have not been asked to opine on the merits of this implied construction. A narrower understanding of

PETITIONER NOKIA
Ex.1002

"sector" might refer to a section of the cell site defined by the transmission area of a corresponding antenna. I have been asked to consider both options in my analysis.

IX. Ground 1: The Challenged Claims are Obvious Over Vornefeld in Combination with Atsuta

70. Vornefeld was published in November 1999. Ex. 1019, ¶ 56. Patent Owner conceded that Vornefeld teaches every feature of claims 1 and 19, upon which claims 28 and 29 respectively depend. Ex. 1009, 7; Ex. 1011, 2 n.1 ("Patent Owner does not herein dispute the patentability of the independent claims 1, 10, and 19."); Ex. 1015; 56:19–57:9 ("[Vornefeld] knocks out our independent claims. We concede that."). I agree.

71. The application of Vornefeld to independent claims 1 and 19 is summarized in advance of addressing dependent claims 28 and 29.

72. Atsuta was filed on September 9, 1996. Atsuta is being combined with Vornefeld to establish that the features of claims 28 and 29 were also known.

A. Vornefeld Applied To Claims 1 and 19

1. Independent Claim 1

Claim 1[a][b]: "For use in a wireless access network comprising a plurality of base stations, each of said plurality of base stations capable of bidirectional time division duplex (TDD) communication with wireless access devices disposed at a plurality of subscriber premises in an associated cell site of said wireless access network, a

PETITIONER NOKIA
Ex.1002

transceiver associated with a first of said plurality of base stations comprising:"

73. Vornefeld teaches a wireless access network comprising" "base stations" "capable of … TDD[] communication with [] devices [] at … subscriber premises in an associated cell site" by describing "an example of a modern broadband wireless access system." Ex. 1004, 52. The "cellular mobile communications system" in Vornefeld uses a base station with "multiple antenna beams that can be electronically directed to the mobile terminal (MT) locations." Ex. 1004, 52, Fig. 2. As an example, Vornefeld's "radio subsystem operates between 5 and 6 GHz on a time-division duplex (TDD) channel with a bandwidth of 20 MHz/frequency channel." Ex. 1004, 52. The TDD channel uses "the same frequency for up- and downlink; gathered uplink channel information supports downlink beamforming." Ex. 1004, 53.

74. Figure 2 of Vornefeld shows a base station communicating with multiple mobile terminals (MTs). Ex. 1004, 52, Fig. 2.

PETITIONER NOKIA
Ex.1002

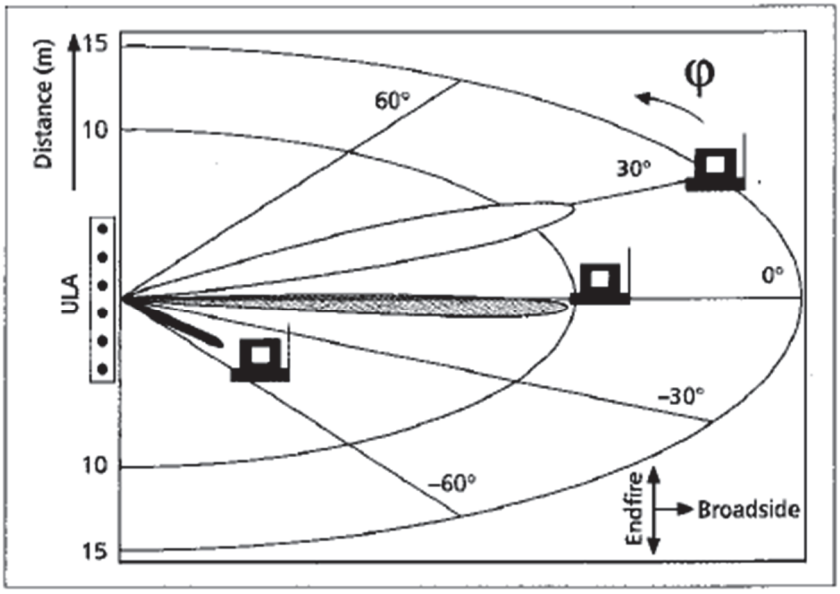

■ **Figure 2.** *Simultaneous transmission using directive beams.*

Ex. 1004, Fig. 2. Each base station may include one or more uniform linear array (ULA) antennas, which form part of the base station's transceiver. Ex. 1004, 52, 56-57. Vornefeld notes that "smart antennas form their beams in the baseband." Ex. 1004, 52.

Claim 1[c]: "transmit path circuitry associated with a beam forming network capable of transmitting directed scanning beam signals each directed to substantially only wireless access devices within a different one of a plurality of sectors of a cell site associated with said first base station,"

75. Vornefeld teaches "transmit path circuitry" for "transmitting directed scanning beam signals each directed to substantially only wireless access devices within a different one of a plurality of sectors of a cell site associated with said first base station." Specifically, Vornefeld describes "[t]he ability to set up multiple antenna beams that can be electronically directed to the mobile terminal (MT)

locations adaptively leads to an increase in capacity and reduces signal interference." Ex. 1004, 52. In addition, "[f]or phased array antennas, beamforming is performed at the RF level by controlling the amplitudes and phases of the feeding currents via attenuators and phase shifters. Smart antennas form their beams in the baseband, that is, the feeding currents of the sensor elements are directly proportional to the modulated baseband signals." Ex. 1004, 52. Vornefeld further describes how downlink beamforming allows the system to target different MTs. Ex. 1004, 57.

76. Vornefeld Fig. 2 (shown above) shows a uniform linear array ("ULA") antenna covering 120° of the cell site. Ex. 1004, Fig. 2. Vornefeld describes how three such ULAs in "triangular configuration" may be used to cover the entire cell site. Ex. 1004, 52. The baseband includes "[a] beamforming algorithm computes a weight matrix for each time slot that adjusts the phases at the antenna elements to steer the main beam pointing direction toward the estimated DoA of the desired MT." Ex. 1004, 53. And, "[d]epending on the number of antenna elements and the applied algorithm, array antennas are able to simultaneously direct several beams to different positions conveying individual user signals (Fig. 2)." Ex. 1004, 53. Vornefeld's Fig. 2 depicts several subscribers within the 120° sector covered by the ULA, with a directed scanning beam signal transmitted to each of the MTs in that sector using transmit path circuitry

PETITIONER NOKIA
Ex.1002

associated with the ULA, which is the claimed "signals transmitted using a beam pattern directed within a sector," which are directed to a plurality of wireless access devices within a different one of a plurality of sectors.

Claim 1[d]: "wherein said transmit path circuitry transmits, at a start of a TDD frame, a broadcast beam signal to wireless access devices within more than one of said sectors, the broadcast beam signal comprising a start of frame field, and"

77. Vornefeld teaches that a scheduler at the base station groups various control and data channels into MAC frames that are transmitted to users. Ex. 1004, 54. In Vornefeld, each MAC frame "starts with two broadcast channels, the broadcast channel (BCH) and the frame channel (FCH), followed by a downlink phase, an uplink phase, and the random access channels (partitioned, RCH-P, and unpartitioned, RCH-UP)." Ex. 1004, 54. The BCH "conveys signaling information concerning the whole radio cell in the downlink direction . . . Every frame starts with a BCH." Ex. 1004, 54 (emphasis added); Fig. 3. Thus, a broadcast beam signal, which includes a start of frame field, is transmitted at the start of a TDD frame. Furthermore, that broadcast beam signal is transmitted to wireless access devices within more than one of said sectors ("the whole radio cell") to cover multiple sectors. Ex. 1004, 54, 55 ("to inform all the terminals about their individual transmission and reception schedules for the next MAC frame").

PETITIONER NOKIA
Ex.1002

78. The ’931 Patent admits that the HIPERLAN/2 specification in Vornefeld is an example of a TDD system in which the base station controller “broadcast[s] the resource allocation at the start of every frame.” Ex. 1001, 7:43-54.

Claim 1[e]: “ subsequently transmits, in a downlink portion of said TDD frame, first downlink data traffic to substantially only wireless access devices within one of said sectors using one of said directed scanning beam signals.”

79. Vornefeld teaches the transmit path circuitry subsequently transmits downlink traffic data to substantially only wireless access devices within one of the sectors. Ex. 1004, Fig. 3. Figure 3 of Vornefeld shows the frame structure of a transmission:

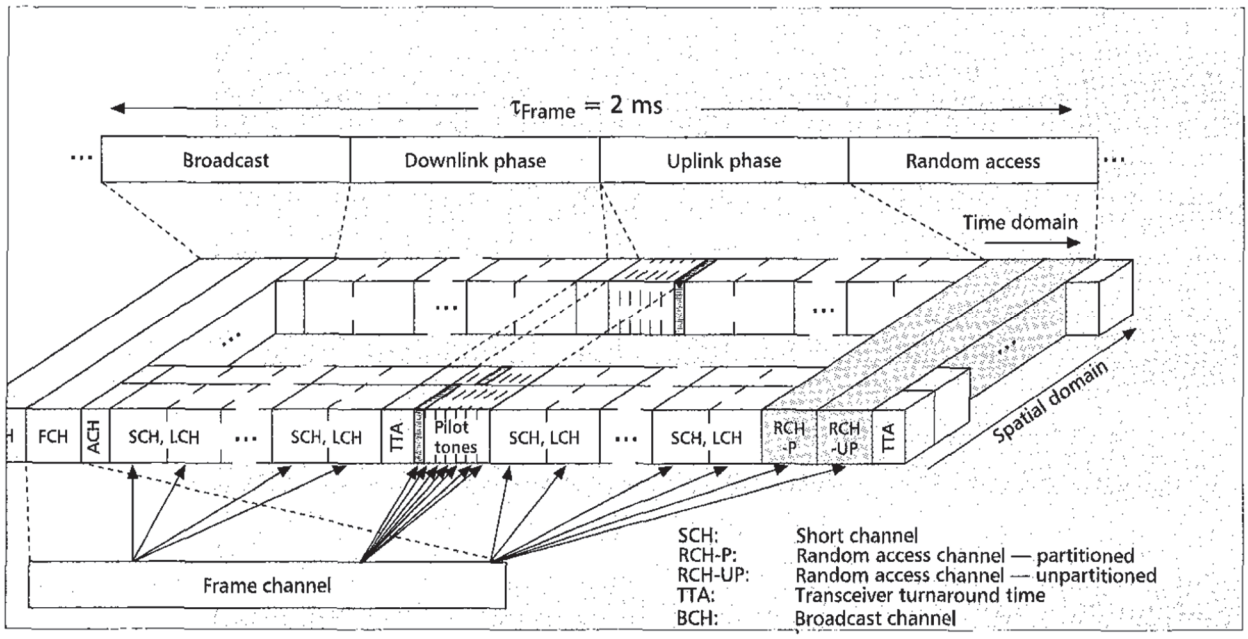

Ex. 1004, Fig. 3

PETITIONER NOKIA
Ex.1002

80. Fig. 3 illustrates the "downlink phase" of the frame, which may include long channel (LCH) portions that serve to transmit user data. Ex. 1004, 54. Furthermore, the LCHs dedicated to a single terminal are grouped together. Ex. 1004, 54. Vornefeld describes performing downlink transmission by forming "directive beams" which enable the base station to send information to several locations using the same frequency. Ex. 1004, 55.

2. Independent Claim 19

Claim 19[a]: "For use in a wireless access network comprising a plurality of base stations, each of said plurality of base stations capable of bidirectional time division duplex (TDD) communication with wireless access devices disposed at a plurality of subscriber premises in an associated cell site of said wireless access network, a method of communicating with a first of said plurality of base stations comprising the steps of:"

81. Vornefeld teaches these features for reasons similar to those noted above at claim 1[a]. Regardless of whether there are minor differences in claim scope, the analysis performed above and the evidence relied on is substantially similar such that my conclusion is that this limitation is also met by Vornefeld.

Claim 19[b]: "transmitting, at a start of a TDD frame, a broadcast beam signal to wireless access devices within more than one of a plurality of sectors within said associated cell site,"

82. Vornefeld teaches these features for the reasons noted above at claims 1[b] and 1[c]. Again, regardless of any minor differences in claim scope, the

PETITIONER NOKIA
Ex.1002

analysis performed and evidence relied on is substantially similar such that my conclusion is the same.

Claim 19[c]: "the broadcast beam signal comprising a start of frame field capable of synchronizing receivers in said wireless access devices; and"

83. Vornefeld teaches these features for the reasons including those noted above at claims 1[b] and 1[c]. Furthermore, Vornefeld teaches that the start of frame field is capable of synchronizing receivers in said wireless access devices. Ex. 1004, 54. As noted above with respect to claims 1[b] and 1[c], Vornefeld teaches that each frame includes two broadcast channels: the BCH and the FCH. Ex. 1004, 54. Every frame starts with the BCH, which "conveys signaling information concerning the whole radio cell in the downlink direction [and] announces the location of the FCH" within the frame. Ex. 1004, 54. The FCH is "used to transmit the information about the structure of the MAC frame for the up- and downlink phases. This channel is broadcast in the downlink direction. It contains announcements and reservations of long and short transport channels the individual MTs have to transmit or receive in." Ex. 1004, 54. The BCH in combination with the FCH is used to synchronize the receivers in the wireless access devices by informing each user which transport channels that user has been assigned in the uplink and downlink, and together comprise a "start of frame," which is transmitted as a "broadcast beam signal."

84. Vornefeld was designed to be "embedded in the context of HIPERLAN/2, which serves here as an example of a modern broadband wireless system." Ex. 1004, 52. The frame structure of HIPERLAN/2 includes a basic frame with fixed length, which comprises five fields for broadcast control, frame control, downlink, uplink and random access. The TDD frame structure begins with a broadcast control channel (BCH) which contains a preamble: "The preamble in the broadcast control channel enables frames synchronization, automatic gain control, frequency synchronization as well as channel estimation." Because Vornefeld incorporates the HIPERLAN/2 frame structure, it is clear that Vornefeld uses a start of frame field capable of synchronizing receivers in the wireless access devices.

Claim 19[d]: "transmitting, in a downlink portion of said TDD frame, first downlink data traffic to substantially only wireless access devices in a first of said sectors using a first directed scanning beam signal."

85. Vornefeld teaches these features for the reasons noted above at Claims 1[b] and 1[d]. As discussed above, regardless of any minor differences in claim scope, the analysis performed and evidence relied on is substantially similar such that my conclusion is the same.

PETITIONER NOKIA
Ex.1002

B. Vornefeld and Atsuta Applied to Claims 28 and 29

1. Vornefeld

86. Like the '931 patent, Vornefeld describes a wireless communication between a base station and subscribers using space-division multiple access (SDMA) and time-division multiple access (TDMA) techniques. Vornefeld also uses a TDD frame structure for transmissions and "a smart array antenna" to create beams that can be directed to different sectors. Ex. 1004, 52-53. TDD was a common frame structure at the time. Vornefeld describes these concepts in the context of the HIPERLAN/2, a wireless standard used in Europe at the time, but they are applicable to other wireless standards as well.

87. I understand that, in the Sprint IPR, the Board did not believe that Sprint had proven that Vornefeld explicitly taught the features recited in claims 28 and 29. Specifically, the Board believed that Vornefeld did not describe "using different beams in the same TDD frame (*i.e.*, second downlink data traffic, transmitted in 'said downlink portion of said TDD frame') to transmit to devices within a different sector." Ex. 1009, 23. Regardless of whether Vornefeld specifically described that feature, using different beams to transmit to different sectors in the downlink portion of one frame was known in the field as demonstrated by several prior art references, for example, Atsuta.

PETITIONER NOKIA
Ex.1002

2. Atsuta

88. Like Vornefeld, Atsuta is directed to TDMA frame-based communication between a base station and subscribers. Ex. 1005, 2:64-3:8. Atsuta's base station transmits downlink data to subscribers in different sectors within a single TDMA frame. Ex. 1005, 6:24-61. Atsuta's Fig. 3 illustrates a TDMA frame comprising 60 timeslots, wherein every 20 timeslots is assigned to a subscriber in a different zone.

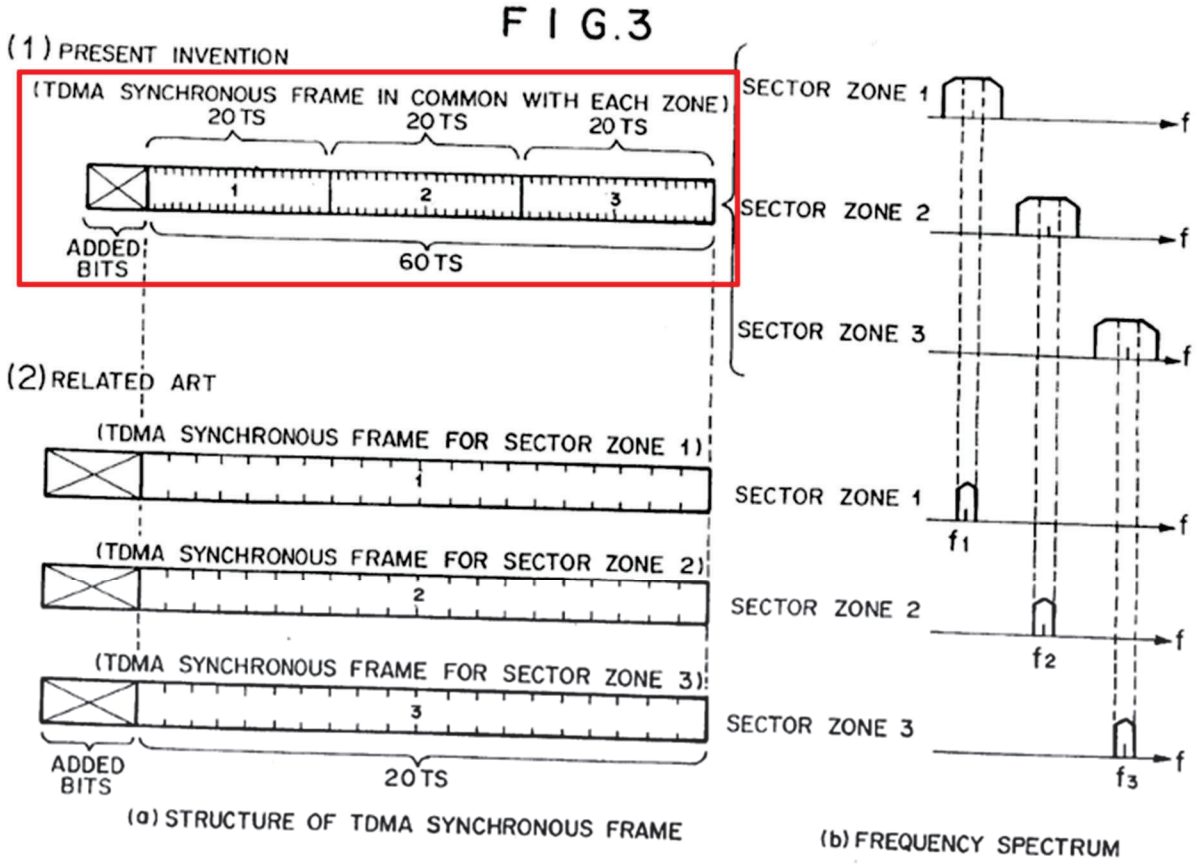

Ex. 1005, Fig. 3.

89. The "sector zone[s]" in Atsuta are "sectors" in the '931 Patent. Ex. 1005, 1:13-25, 1:53-65 ("Such a sector zone method is mainly used to increase the

number of subscriber stations accommodated in the service of the base station"). Specifically, Atsuta's "sector zone[s]" are "fan-shaped" subsections of the total service area, and each zone is assigned its own antenna array, just like the sectors in Vornefeld. Ex. 1004, 52 ("the covered area of the ULA is restricted to values below 180°; a triangular configuration of three ULAs might be used to cover the whole radio cell"), Fig. 2; Ex. 1005, 1:13-25 ("using a fan-shaped beam antenna for sectoring a service area"), 2:41-57, 6:24-58; Ex. 1001, 8:12-19, 12:21-45, 16:4-19, 28:1-13, Fig. 12A. Notably, in Atsuta's Fig. 4, "3d, 3e, and 3f are first to third transmission antennas that radiate … [to] fan-shaped directional space." Ex. 1005, 6:51-57; Ex. 1001, 16:12-14 ("Each RF modem uses an individual antenna to transmit and to receive in its assigned sector. The antennas for different sectors in the same cell site are mounted on the same tower").

90. Atsuta addresses the issue that, in a conventional sectorized TDMA method, where transmissions to different sectors occur in separate TDD frames, separate demodulating circuits and TDMA control circuits are typically used for each sector. Ex. 1005, 2:22-57. This adds to the complexity and expense of the hardware. By transmitting to different users (in different sectors) in the same TDD frame, Atsuta allows this sectorized TDMA communication to run on a "simpl[ified]" structure that uses a single demodulating circuit and TDMA control circuit, thus reducing the "size and power consumption" of the system. Ex. 1005,

PETITIONER NOKIA
Ex.1002

2:60-3:8. Atsuta's system provides a "common"/"shared" functional circuit for the various antenna arrays. Ex. 1005, 2:60-63 ("object of the present invention is to share the same functional circuit"), 3:23-27 ("common demodulating circuit"), 3:58-60 ("As a result of … the present invention, regardless of the number of divided zones, the demodulating circuit and the TDMA control circuit can be shared. Thus, the size of the receiving apparatus can be reduced and thereby the power consumption can be decreased."). A simplified structure provides the benefits of greater reliability, and easier maintenance and scaling.

3. Motivation to Combine Vornefeld and Atsuta

91. A POSA would have been motivated to combine Vornefeld and Atsuta because Atsuta provides a solution to a transmission interference problem recognized by Vornefeld, while providing the additional benefit of simplified hardware requirements. Vornefeld recognizes that certain sets of subscribers are not suited for concurrent transmission to different sectors due to signal interference constraints. Ex. 1004, 56. This can occur, for example, where the subscribers are located in adjacent sectors, and one or more subscribers are near the border of the sectors. Concurrent transmission may cause interference, because subscribers on the border may receive signals for both sectors simultaneously. Vornefeld's solution to multiple access involves splitting up transmissions on the time axis. Ex. 1004, 55. In other words, by transmitting to adjacent sectors in different timeslots,

PETITIONER NOKIA
Ex.1002

these subscribers near the border of two timeslots will receive their directed transmissions without interference.

92. Like Vornefeld, Atsuta describes splitting up transmissions on the time axis, and does so by assigning timeslots within a single frame to subscribers in different sectors, thus mitigating interference. Ex. 1005, 6:24-58. Atsuta's system also simplifies the signal processing structure at the base station, reducing the required number of functional circuits (and computational requirements) to a single circuit. Ex 1005, 2:60-64.

93. Vornefeld itself warns that a drawback of implementing concurrent transmissions is "increased computational complexity." Ex. 1004, 53, 57 ("A possible drawback of a broad introduction of these techniques to systems might be the computational complexity of the algorithms"). Atsuta's frame structure alleviates these concerns, while still enjoying the benefits of sectorization.

94. In addition, Vornefeld's and Atsuta's frame structures are consistent with each other. Both are directed to TDMA frame structured transmissions between a base station and subscribers. Vornefeld uses a broadcast portion at the start of the frame, followed by downlink and uplink. Ex. 1004, Fig. 3, 54. Atsuta generalizes the opening broadcast portion as "added bits," and reserves the remaining time slots for different sectors, recognizing that transmissions may be downlink or uplink. Ex. 1005, Fig. 4, 6:2-7, 6:24-61. Both also consider the spatial

PETITIONER NOKIA
Ex.1002

dimension when broadcasting: Vornefeld by deploying "a smart array antenna" to broadcast to different parts of the cell area (Ex. 1004, 52, Fig. 2) and Atsuta by broadcasting to different sector zones (Ex. 1005, Fig 3). Vornefeld's system directs beam transmissions to specific subscribers throughout the cell area in specific timeslots, which fits Atsuta's method of transmitting to subscribers in different sectors in a single frame. Thus, a POSA would have appreciated that this combination would not result in any difference in function.

95. Because Vornefeld recognized the need to split up transmissions on the time axis, and Atsuta teaches that technique by transmitting to different subscribers (in different sectors) in a single frame, with the benefit of simplified hardware, a POSA would have found the use of Atsuta's frame structure (and circuitry for the same) with Vornefeld's system to be an obvious design choice.

96. A POSA would readily understand that combining Atsuta with Vornefeld would have been straightforward. Atsuta's method for allocating time slots to subscribers in different sectors within a single TDMA frame matches Vornefeld's MAC protocol, which allows transmission to a subscriber with the "granularity of a single time slot." Ex. 1004, 54. And Vornefeld's antenna array allows the transmission beam to move for each time slot. *Id.*, 53. Both Vornefeld and Atsuta (ii) assign subscriber data to timeslots and (ii) use antenna arrays to transmit data to subscribers in various sectors using beams. While, in the Board's

PETITIONER NOKIA
Ex.1002

view, Vornefeld may have used different frames for different sectors, Atsuta simply combines the slots for different sectors into one frame, simplifying the necessary hardware. Ex. 1005, 2:60-64. In short, the combination would be a simple matter of applying Atsuta's frame structure methodology to Vornefeld's system, as well as potentially simplifying the hardware requirements.

97. Atsuta's improvement would be applicable whether Vornefeld had a different control circuit for each antenna array, or only one control circuit for all antenna arrays. If Vornefeld were to use different control circuits for the various antenna arrays, Atsuta's solution would be preferable in that it combines circuitry for the various antenna arrays to provide a "simpl[ified]" structure, thus reducing its "size and power consumption." Ex. 1005, 2:60-3:8. And if Vornefeld used just one control circuit, Atsuta's design would still be applicable inasmuch as its frame structure is intended for that very design.

98. I have considered whether the combined solution would have any disadvantages and I am not aware of any disadvantages that would dissuade a POSA from even considering the combination. Atsuta solves Vornefeld's issue that some subscribers may not be transmitted to simultaneously, and provides the additional benefit of simplifying the necessary hardware.

4. Dependent Claim 28

Claim 28[p]: "The transceiver as set forth in claim 1"

PETITIONER NOKIA
Ex.1002

99. As established above in Sec. VIII(A)(1), Vornefeld describes all the features of Claim 1.

> **Claim 28[a]: "wherein said transmit path circuitry transmits, in said downlink portion of said TDD frame, second downlink data traffic to substantially only wireless access devices within an other of said sectors using an other of said directed scanning beam signals."**

100. Claim 28 involves using transmit path circuitry (see Sec. VIII(A)(1)) to transmit (in the downlink of the TDD frame discussed above in Sec. VIII(A)(1)) second downlink data traffic to substantially only wireless access devices in "another" sector using "another" scanning beam signal. For context, claim 1 recites transmitting first downlink data traffic to "substantially only wireless access devices within one of said sectors," within the same downlink portion of the TDD frame. Thus claim 28 is directed to transmitting downlink data to "another sector" in the same downlink portion of a single TDD frame. This may be accomplished by assigning timeslots within a single TDD frame to subscribers in different sectors.

101. As discussed above, Atsuta describes transmitting downlink data to users in different sectors within a single TDD frame to allow for simpler hardware requirements. Ex. 1005, 6:31-55.

102. Regarding "transmit path circuitry," the circuitry is taught by Vornefeld. See Sec. VIII(A)(1), claim 1b.

PETITIONER NOKIA
Ex.1002

103. Atsuta also describes "transmit path circuitry" in the form of a control circuit, modulating circuit, separating unit, frequency converters, and power amplifiers, highlighted below. Ex. 1005, 6:35-64, Fig. 4.

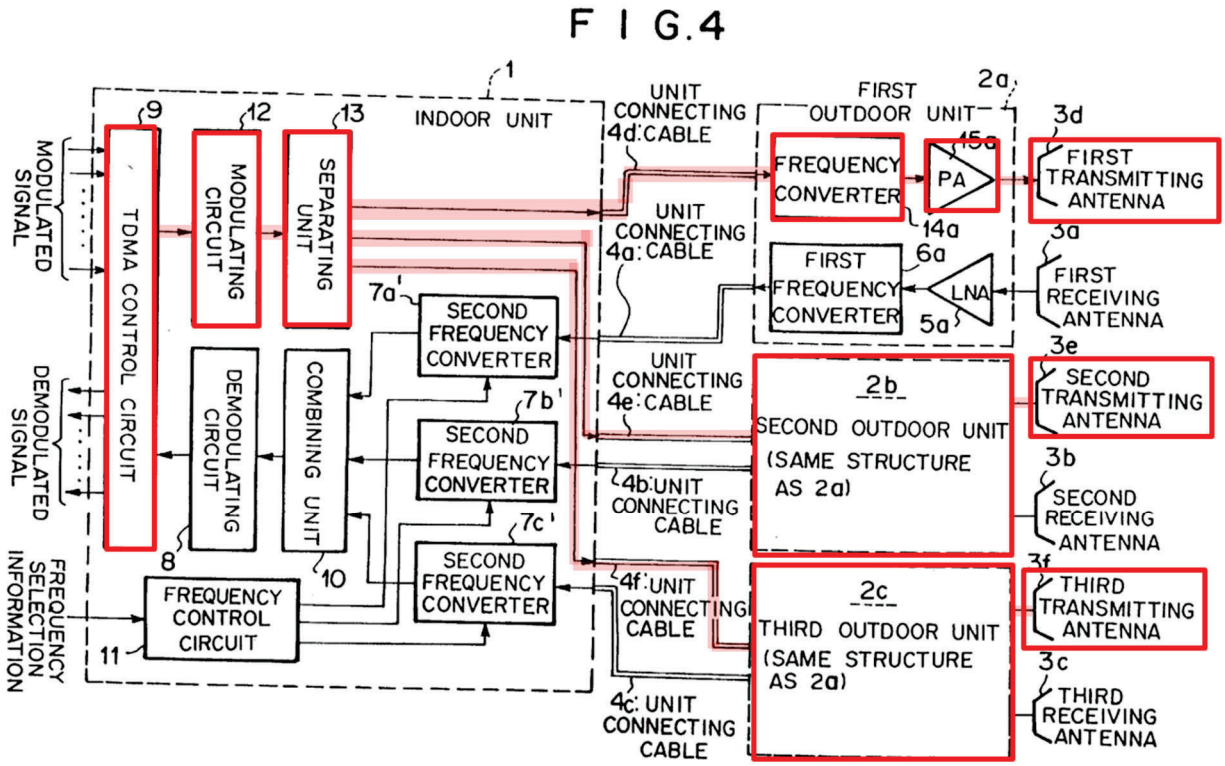

Ex. 1005, Fig. 4.

104. The highlighted apparatus is used to transmit downlink data from the base station to subscribers. *Id.* Either Vornefeld's circuitry or Atsuta's circuitry could be used to generate frames with data to be transmitted to subscribers. Atsuta simply describes the efficiency of using one set of circuitry for the various antenna arrays.

105. Regarding "transmit[ting], in said downlink portion of said TDD frame," Atsuta describes a "single synchronous frame," with timeslots assigned to

downlink data to subscribers in different sectors. Ex. 1005, 6:35-64. These frames are TDD frames because Atsuta describes transmitting data "in the up link direction" in the context of "sharing a TDMA synchronous frame" and because Atsuta describes "asymmetrical communications" in the downlink and uplink directions. Ex. 1005, 5:65-6:12. Vornefeld also teaches TDD frames. Ex. 1004, 53. In addition, the frames in Atsuta are comprised of different timeslots reserved for data transmission (Ex. 1005, 6:35-58), just as a TDD frame is.

106. Regarding transmitting "second downlink data to substantially only wireless access devices within an other of said sectors," Vornefeld describes using different antenna arrays to form different beams to transmit data to subscribers in different sectors. Ex. 1004, 53 ("direct several beams to different positions conveying individual user signals"), 55 ("Forming directive beams … to send different information to several locations"). Vornefeld's beamforming permits an antenna array to transmit targeted beams to specific subscribers at their specific location. Ex. 1004, 52 ("multiple antenna beams that can be electronically directed to the mobile terminal (MT) locations adaptively"). Thus, Vornefeld transmits to "substantially only" subscribers within that subscriber's sector with a given beam, whether the sector is defined as the transmission area of a corresponding antenna array, or the geographic portion of the cell site that the subscriber is located in. Ex. 1004, 53 ("steer the main beam pointing direction towards the estimated DoA of

the desired MT"), Fig. 2. Atsuta also describes transmitting "second downlink data to substantially only wireless access devices within an other of said sectors" by transmitting downlink data to users in different sectors[2] using directional antenna arrays. Ex. 1005, 6:31-64, Fig. 3. With the nature of directionality, the antenna arrays are able to transmit directionally to "substantially only" devices within the targeted sector. Ex. 1005, 6:51-54. Figure 3 below illustrates assigning timeslots in a single TDD frame to users in different sectors. The frame comprises 60 time slots ("TS"), and every 20 TS is assigned to a different sector: 20 TS to a first sector, the next 20 TS to a second sector, the last 20 TS to a third sector.

[2] Regarding "an other of said sectors," Atsuta uses the terms "zone" or "sector zone" interchangeably to refer to a "sector." Ex. 1005, 1:13-25 ("using a fan-shaped beam antenna for sectoring a service area"), 1:53-55 ("In the conventional sector zone type TDMA communication method, independent frames are formed for respective divided zones").

PETITIONER NOKIA
Ex.1002

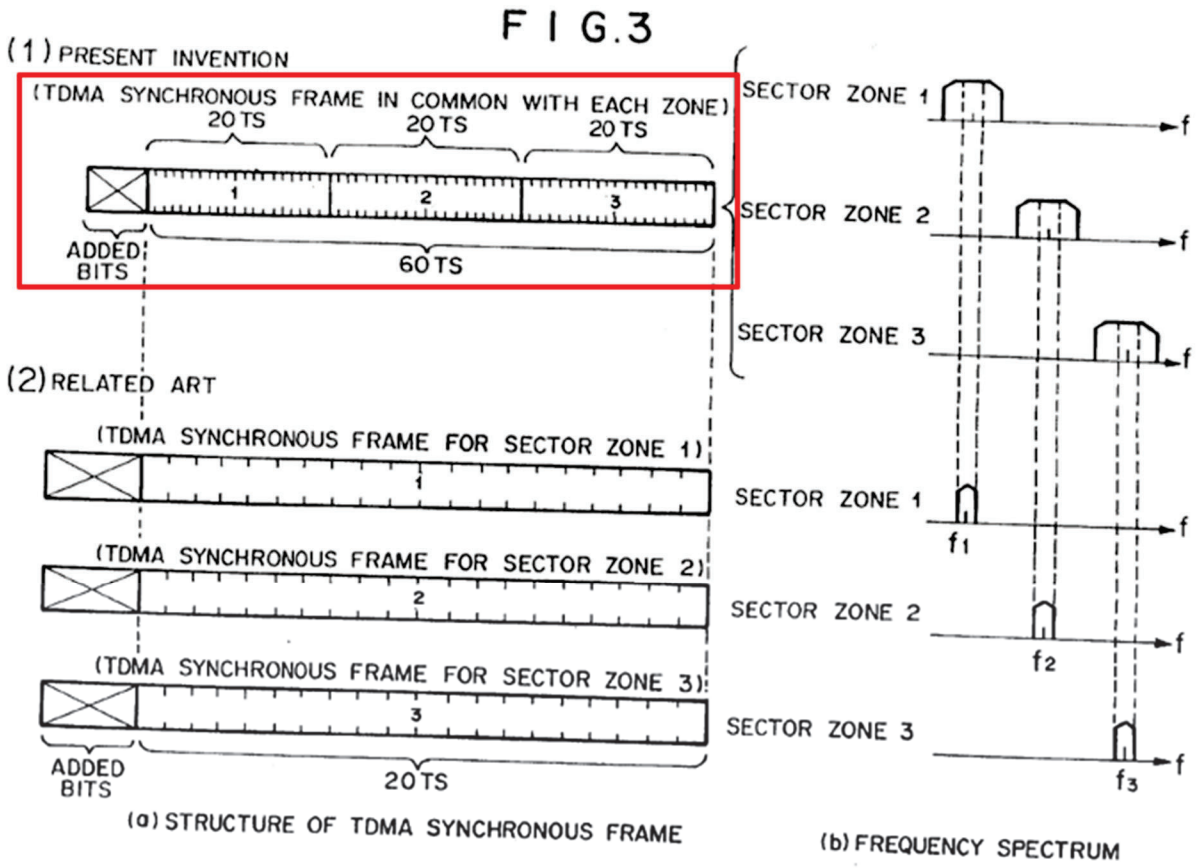

Ex. 1005, Fig. 3.

107. Regarding "wireless access devices," Atsuta describes communication between a base station and "mobile stations" and/or "subscriber stations" using radio frequencies. Ex. 1005, 1:25-52; 2:64-3:8. Both Vornefeld and Atsuta describe antenna arrays that send wireless transmissions to the subscriber's location. Ex. 1004, 53 ("array antennas … direct several beams to different positions conveying individual user signals"), 55 ("Forming directive beams … to send different information to several locations"); Ex. 1005, 1:12-18 ("using a fan-shaped beam antenna), 6:51-54 ("transmission antennas that radiate the transmission frequency signals"). Such "directional" transmission would be

transmitted to "substantially only wireless access devices" in the desired sector, because the purpose of the directional antenna array is as the name suggests: to transmit in a particular direction. Ex. 1004, 52; 1005, 1:6:51-58. Regarding transmitting "using an[]other of said directed scanning beam signals," Atsuta describes sending downlink data to each sector using the directional transmitting antenna array assigned to the respective sector. Ex. 1005, 6:31-64, Fig. 4 ("first transmitting antenna," "second transmitting antenna"). The use of a directional transmitting antenna to transmit data suggests the use of a "directed scanning beam signal," since Atsuta points out the use of "fan-shaped beam antenna." Ex. 1005, 1:12-18. Vornefeld also describes using different beam signals to transmit to different sectors. Ex. 1004, 53, 55.

108. A POSA would have readily understood how to incorporate Atsuta's technique of transmitting to users in different sectors within a single downlink TDD frame into Vornefeld's system. The equivalent downlink data in Vornefeld Fig. 3 and Atsuta Fig. 3 are highlighted below. In Vornefeld's Fig. 3, each row is a transmission to a different portion of the cell site (as indicated on the "spatial domain" axis). Thus, the blue, green, and red downlink data in Vornefeld Fig. 3 show downlink data transmitted to subscribers in different sectors, and the same blue, green, and red downlink data are shown in Atsuta Fig. 3 all within a single frame.

PETITIONER NOKIA
Ex.1002

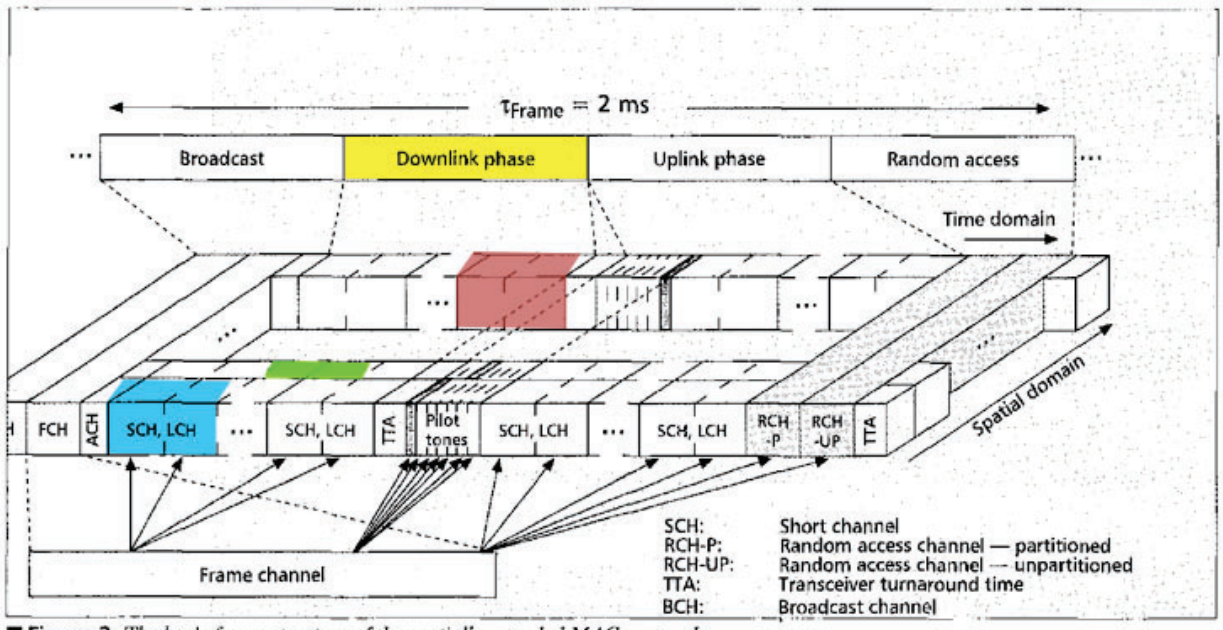

■ **Figure 3.** *The basic frame structure of the spatially extended MAC protocol.*

Ex. 1004, Fig. 3.

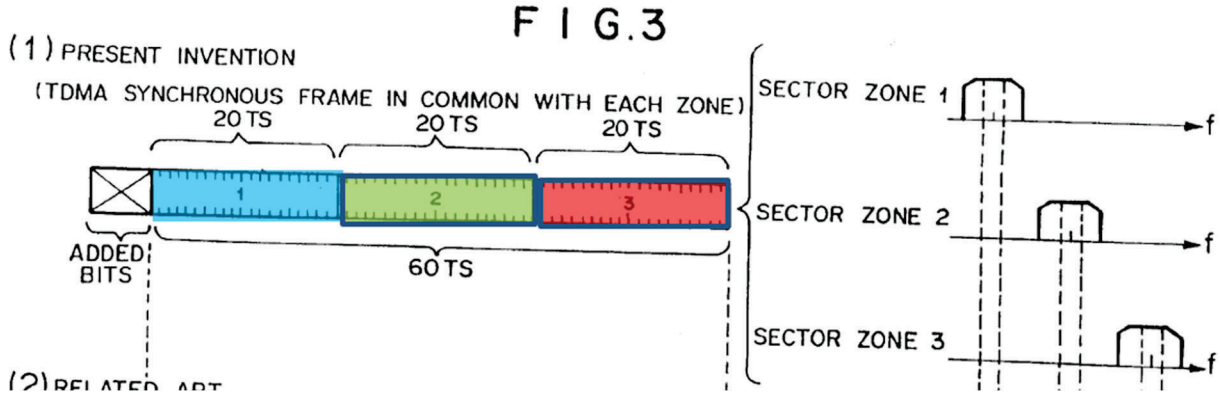

Ex. 1005, Fig. 3.

109. Vornefeld describes scheduling transmissions (i.e., assigning data to timeslots) in two dimensions: space and time. Ex. 1004, 55. Data that can be transmitted concurrently without interference—for example, transmissions from the base station to sectors in different directions, say east and west—are scheduled for the same timeslot. Data that cannot be transmitted concurrently without

PETITIONER NOKIA
Ex.1002

interference—for example, transmissions from the base station to neighboring sectors, say east and northeast—are scheduled in different timeslots.

110. Atsuta describes assigning timeslots to subscribers in different sectors within a single TDD frame. Vornefeld similarly describes assigning timeslots to subscribers in different sectors, but the Board determined that these transmissions were in different frames, rather than a single frame.

111. The combination of Atsuta and Vornefeld merely substitutes one known frame structure in place of another, using Atsuta's design of transmitting to different sectors in one frame. Atsuta also provides the benefit of the simplified signal processing apparatus, creating a single frame rather than multiple simultaneous frames.

112. Vornefeld's system is already capable of assigning time slots to specific subscribers and directing antenna beams to that subscriber location. Ex. 1004, 53. And Vornefeld recognizes that certain combinations of users cannot be transmitted to concurrently due to interference. Ex. 1004, 56. This may occur, for example, if the users are in neighboring sectors, and one or more users is near the border of the two sectors. Concurrent transmission to both sectors using the same frequency channel may cause interference for the user near the border. Sending the transmissions at separate times, as Vornefeld suggests, mitigates this interference, as the user near the border receives its data without interference, and can disregard

PETITIONER NOKIA
Ex.1002

the data for other users. Ex. 1004, 55. Atsuta describes transmitting to users in different sectors sequentially in a single frame, while also simplifying the necessary hardware. Ex. 1005, 2:60-3:8, 6:31-58.

113. Because Vornefeld recognized the need to split up transmissions on the time axis, implementing Atsuta's teachings of transmitting sequentially within a single frame, and enjoying the benefits of Atsuta's simplified hardware, would have been an obvious variation to a POSA.

5. Dependent Claim 29

Claim 29[p]: "The method as set forth in claim 19,"

114. As established above in Sec. VIII(A)(1), Vornefeld describes all of the features of Claim 19.

> **Claim 29[a]: "further comprising: transmitting, in said downlink portion of said TDD frame, second downlink data traffic to substantially only wireless access devices in a second of said sectors using a second directed scanning beam signal."**

115. For the reasons noted above at Claim 28, this claim is obvious over Vornefeld in view of Atsuta.

X. Ground 2: The Challenged Claims are Obvious Over Vornefeld in Combination with Goldburg

A. Goldburg

116. Goldburg was filed on December 10, 1997, and issued on November 28, 2000.

PETITIONER NOKIA
Ex.1002

117. Like Vornefeld, Goldberg is directed to TDMA frame-based communication between a base station and subscribers. Ex. 1006, Abstract, 2:13-33. Goldburg describes sending downlink signals from a base station to users in different regions within a single TDD frame. Ex. 1006, 12:11-24. Goldburg defines a "region" as a subdivision of the cell area. Ex. 1006, 20:8-39 ("Partition the parameter space into a finite number of regions whose union is the entire space"). Goldburg uses the term "sector" to mean the coverage area of an antenna array. Ex. 1006, 4:6-18 ("the intended coverage region (i.e., the sector) of the antenna array"). Goldburg "regions" are created without regard to antenna array transmission area, and instead divide the area such that there are at least as many regions as subscribers. Ex. 1006, 20:8-39 ("the number of regions is the number of co-channel users. Note that other embodiments may have less users than regions").

118. I understand that in a related litigation, Patent Owner uses the term "sector" to mean a "geographic portion of the cell site." I have been informed that Patent Owner's allegations in that litigation would not require that each sector have an antenna array assigned to it, as is described in the '931 patent. Ex. 1001, 12:21-46, 16:4-19. Consequently, I have been asked to consider other known methods of dividing the coverage area around a base station, including Goldburg's description of "regions."

PETITIONER NOKIA
Ex.1002

119. Goldburg describes calculating a weight vector for each region. Ex. 1006, Abstract, 6:6-7:53. The weight vector for each region (which has at most one subscriber) modifies the phase (timing) and amplitude (signal strength) of the downlink signal to that region, and weight vectors for all regions can be calculated to minimize interference between transmissions to neighboring regions. Ex. 1006, 6:22-37. For example, by controlling the phase (timing) of downlink signals, signals to neighboring subscribers can be sent at different times, minimizing interference. And by controlling the amplitude (signal strength) of the downlink signal, the signal can be received by the targeted subscriber without overwhelming neighboring subscribers. In this way, weight vectors permit more targeted beam to be used, and may be used to achieve desirable overall radiation patterns. Ex. 1006, 17:55-65 ("design D weight vectors, each causing a directional pattern to a corresponding MS without causing interference with the other MSs, while maintaining a net NOR pattern in the whole region in which a NOR pattern is desired or required"). Certain overall radiation patterns are desirable because, for example, a base station may need to broadcast common information such as timing or synchronization data omnidirectionally to all subscribers, maintaining an omnidirectional radiated power pattern ensures that the common information reaches all users effectively. Ex. 1006, 1:17-47, 2:6-67.

PETITIONER NOKIA
Ex.1002

120. Goldburg transmits to multiple subscribers within the same frame as part of the TDMA protocol. Ex. 1006, 3:47-4:18, 9:59-11:23. TDMA allows multiple users to share the same frequency channel by dividing the signal into different timeslots. Goldburg describes eight timeslots in a frame, where the first timeslot may be reserved for common broadcast information, while the rest of the slots may be used to transmit directionally to specific subscribers. Ex. 1006, 3:47-4:18, 10:10-15, 12:11-24. This aligns with Vornefeld's teachings, which reserves timeslots at the start of the frame for common information, and allows later timeslots to be used for downlink and uplink data for specific subscribers. Ex 1004, 54.

B. Motivation to Combine Vornefeld and Goldburg

121. A POSA would have been motivated to combine Goldburg's frame structure with Vornefeld's system because Goldburg provides a solution to a transmission interference problem recognized by Vornefeld. Both references are directed to similar technologies, such as TDMA frame-structured communication between a base station and subscribers that includes common broadcast information along with timeslots for specific subscribers.

122. Vornefeld recognizes that certain sets of subscribers are not suited for concurrent transmission due to signal interference constraints, for example, where the subscribers are in adjacent sectors, and one or more subscribers are near the

PETITIONER NOKIA
Ex.1002

border of the sectors—concurrent transmission may cause interference for subscribers near the border. Ex. 1004, 56. Vornefeld's solution is splitting up these transmissions on the time axis, rather than transmitting them concurrently. *Id.*, 55. Goldburg describes this splitting on the time axis by assigning timeslots within a single frame to subscribers in different regions, while reserving slots for common broadcast information to all subscribers and maintaining an overall desired radiation pattern using weight vectors. Vornefeld similarly reserves timeslots for common broadcast information to all subscribers and also utilizes weight vectors to determine efficient broadcasting patterns.

123. Both Vornefeld and Goldburg use a common channel to broadcast common information to all subscribers and transmit directed data to specific subscribers. Ex. 1004, Fig. 3, 54-55; Ex. 1006, 3:1-15, 3:40-4:5. This common information may consist of base station identification, timing, and synchronization data that coordinates the subscribers to the base station. And both use weight vectors to calculate efficient transmission patterns to subscribers. Ex. 1004, 53, 56; Ex. 1006, 2:7-11, 6:20-8:45, 17:34-62. Because of the fit between these technologies, this combination would not result in any difference in function, as a POSA would have appreciated.

124. A POSA would have also had a reasonable expectation of success in incorporating Goldburg's regions into Vornefeld's system. Goldburg's method for

transmitting to subscribers in different regions within a single frame matches Vornefeld's MAC protocol, which allows transmission to specific subscribers with the "granularity of a single time slot." Ex. 1006, 54. Also, Vornefeld's antenna array allows the transmission beam to move for each time slot, allowing different beams to be directed (using weight vectors) to specific regions. Ex. 1004, 53. Because Vornefeld recognizes that transmissions to certain sets of subscribers must occur sequentially rather than concurrently, and Goldburg describes transmitting to subscribers in different regions sequentially within a single frame, while aligning with Vornefeld's teaching of broadcasting common information and utilizing weight vectors, combining the teachings would have been obvious, and would result in transmission to different regions within a single frame.

125. I have considered whether the combined solution would have any disadvantages and I am not aware of any disadvantages that would dissuade a POSA from even considering the combination. Goldburg addresses Vornefeld's issue of needing to avoid interference when transmitting to different subscribers by assign specific regions and calculating weight vectors to minimize interference and achieve a desirable overall radiation pattern.

PETITIONER NOKIA
Ex.1002

C. Dependent Claim 28

Claim 28[p]: "The transceiver as set forth in claim 1"

126. As established above in Sec. VIII(A)(1), Vornefeld teaches all the features of claim 1.

Claim 28[a]: "wherein said transmit path circuitry transmits, in said downlink portion of said TDD frame, second downlink data traffic to substantially only wireless access devices within an other of said sectors using an other of said directed scanning beam signals."

127. Goldburg describes transmitting to subscribers in different regions[3] within a single TDD frame. Ex. 1006, 12:11-18 ("Data destined for multiple mobiles and from multiple logical channels are put together to form a GSM downlink frame. For example, time-slot 0 might contain a synchronization control channel (SCH) burst, time-slot 1 might contain TCH/F data for one mobile, . . . time-slot 6 might contain slow-associated control channel (SACCH) data for

[3] Again, I understand that in a related litigation, Patent Owner uses the term "sector" to mean a "geographic portion of the cell site," rather than the portion of the cell site defined by the transmission area of an antenna array. Ex. 1001, 16:8-15, 28:1-13. To the extent Patent Owner's implied definition of "sector" applies, Goldburg's "regions," being portions of the cell site that include at most one subscriber (Ex. 1006, 7:24-29, 20:8-40), describe these "sectors."

PETITIONER NOKIA
Ex.1002

another mobile, and time-slot 7 might contain TCH/F data for yet another mobile").

128. Regarding "transmit path circuitry," Goldburg describes a "subsystem" for building TDD frames in a TDMA system. Ex. 1006, 12:25-13:13, Figs. 1(a), 1(b). This subsystem generates a frame that includes a downlink portion with timeslots assigned to subscribers in different regions. Ex. 1006, 12:11-33. The circuitry is also taught by Vornefeld, as established above.

129. Regarding the "transmit[ting], in said downlink portion of said TDD frame, second downlink data traffic to substantially only wireless devices within an[]other sector," Goldburg describes how data "destined" for subscribers in different regions are put together to form a single TDD frame. Ex. 1006, 12:11-33. Transmitting to subscribers in different regions is done through beamforming and the use of weight vectors to target beams to specific subscribers while minimizing interference in neighboring regions. Ex. 1004, 53; Ex. 1006, 2:37-67.

130. Vornefeld describes transmitted beams targeted to specific subscribers. Ex. 1004, 53, 55. By targeting beams to specific subscribers, the transmissions are directed to "substantially only" devices within a particular region, as taught by Goldburg. Indeed, the only issue identified by the Board with respect to Vornefeld was that it did not describe transmitting second downlink data traffic in the *same* frame, but instead described transmitting second downlink data

PETITIONER NOKIA
Ex.1002

traffic in a "different (spatially separated) TDD frame that is simultaneously transmitted." Ex. 1009, 23. Setting aside whether Vornefeld describes a single frame or multiple simultaneous frames, Goldburg describes transmitting first and second downlink data traffic in a single frame. For example, Goldburg describes a downlink frame wherein "time-slot 1 might contain TCH/F data for one mobile," and "time-slot 6 might contain slow-associated control channel (SACCH) data for another mobile." Ex. 1006, 12:11-24. In the example, the mobile device in time-slot 6 is receiving "second downlink data traffic," distinct from the first downlink data traffic received by the mobile device in time-slot 1. Ex. 1006, 12:11-24.

131. Goldburg's method of transmitting to devices in different regions within a single frame could be implemented in Vornefeld by simply applying Goldburg's technique of partitioning the parameter space into regions, each region having at most one subscriber. The resulting frame in Vornefeld would transmit to subscribers in different regions within a single frame. Both Vornefeld and Goldburg reserve timeslots to broadcast common information to all subscribers, and both utilize weight vectors to maintain desired overall radiation patterns, with Goldburg's technique of partitioning into regions furthering the goal of achieving a radiation pattern that facilitates efficient broadcasting.

132. Regarding "using an[]other of said directed scanning beam signals," Goldburg and Vornefeld (see Sec. VIII(A)(1), supra) both describe using an

PETITIONER NOKIA
Ex.1002

antenna array to send different scanning beam signals to different subscribers. Ex. 1006, 5:25-58 ("orthogonal signals are then beamformed so that the orthogonal signals are delivered to the different beams in the array antenna"), 8:57-65, 13:34-63, Fig 1(d). Figure 1(d) illustrates antenna arrays that transmit beam signals to each subscriber. A POSA would understand that antenna arrays transmit data to subscribers using different beams for each transmission, with weight vectors used to weight signals to different regions.

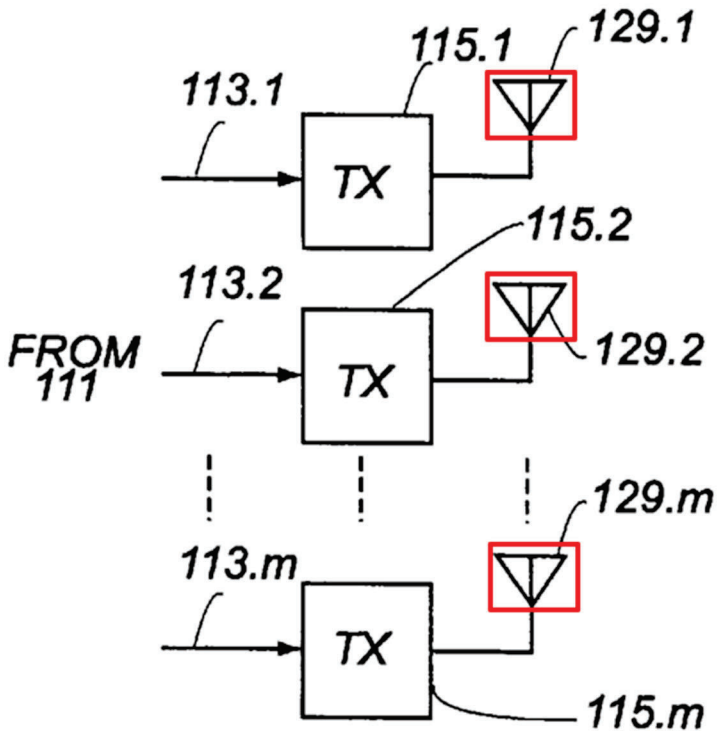

Figure 1(d)

Ex. 1006, Fig. 1(d).

PETITIONER NOKIA
Ex.1002

133. The use of different scanning beam signals is also met by Vornefeld, as discussed above. Ex. 1004, 55 ("Forming directive beams … to send different information to several locations").

134. A POSA would have readily understood how to incorporate Goldburg's technique of transmitting to subscribers in different regions within a single downlink TDD frame into Vornefeld's system, given Vornefeld provides a framework for using weight vectors, and Goldburg describes a particular implementation of them through the use of regions.

135. Ultimately, the combination would be a simple incorporation of Goldburg's regions into Vornefeld's system for sending downlink data to devices in different locations.

D. Dependent Claim 29

Claim 29[p]: "The method as set forth in claim 19,"

136. As established above in Ground 1, Vornefeld teaches all the features of Claim 19.

Claim 29[a]: "further comprising: transmitting, in said downlink portion of said TDD frame, second downlink data traffic to substantially only wireless access devices in a second of said sectors using a second directed scanning beam signal."

137. For the reasons noted above with respect to claim 28, this claim is obvious over Vornefeld in view of Goldburg.

XI. Ground 3: Claims 28 and 29 Are Obvious Over Youssefmir in Combination with Atsuta

A. Youssefmir

138. Youssefmir was filed on September 29, 2000.

139. Like the ’931 Patent, Youssefmir is directed to systems and method for wireless communication between a “base station having a smart antenna system” and “remote communication devices.” Ex. 1007, Abstract. In the illustration allow, Youssefmir shows a base station (102) with an array of antenna elements (104) transmitting to user terminals (105-108) each of which has its own antenna element. Ex. 1007, 4:33-48; 1:29-56.

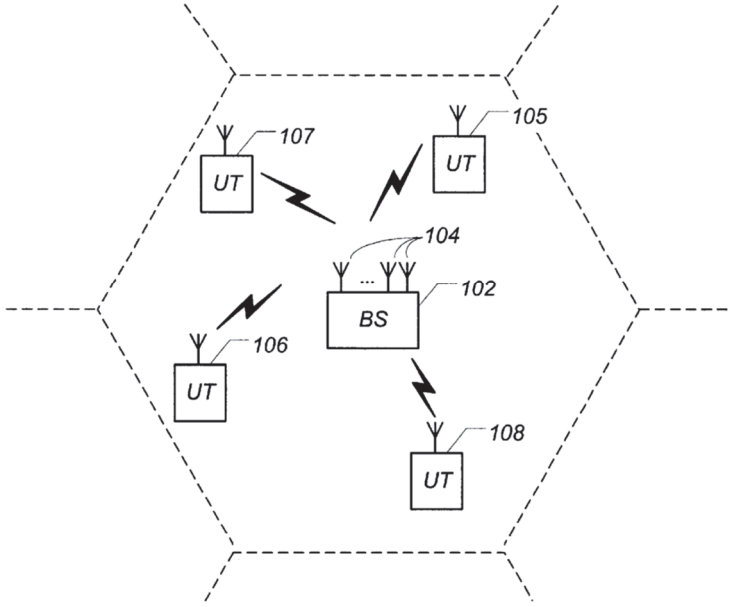

Ex. 1007, Fig. 1 (excerpt).

140. Youssefmir further describes that the system may use a beamforming network and array antennas. Ex. 1007, 1:47-52, 7:33-61. Youssefmir also describes

the sectorization of a cell site. Ex. 1007, 14:5-19. A POSA would understand that an antenna array system performing beamforming would have sectors defined by the transmission area of the corresponding antenna array. This is made clear in Atsuta, which shows that each antenna element is an array that is responsible for a section of the overall site. Ex. 1005, 1:13-18 ("fan-shaped beam antenna for sectoring a service area"); Ex. 1006, 4:6-18 ("the intended coverage region (i.e., the sector) of the antenna array"). A POSA would understand that each antenna array in a sectorized system transmits beams to substantially only the subscribers within its corresponding sector given Youssefmir's discussion of sectorization and beamforming, and in view of Atsuta's explanation of the same. Ex. 1007, 1:29-2:12.

PETITIONER NOKIA
Ex.1002

141. These features are generally similar to the design in the system in the ’931 Patent, which uses a base station (110) to communicate with various devices at user premises (121-123), as well as a beamforming network for the base station. Ex. 1001, Abstract, 9:16-34.

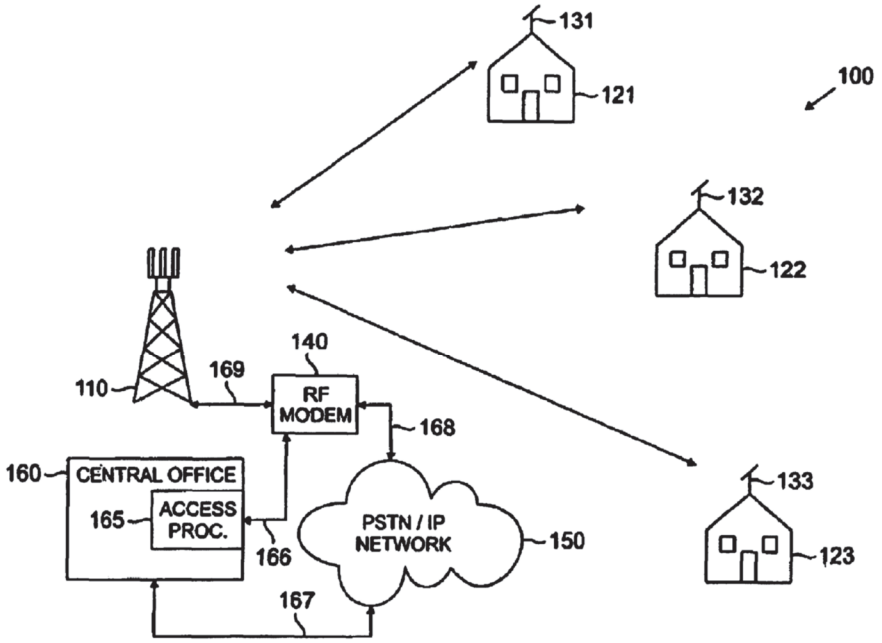

FIG. 1

Ex. 1001, Fig. 1.

142. Also, like the ’931 Patent, Youssefmir describes a TDMA system that uses TDD “so that the uplink and downlink frequency … are the same.” Ex. 1007, 7:1-7, 6:38-48 (describing the additional use of SDMA to transmit to multiple user terminals on one channel). Youssefmir also explains that its “directional signal pattern” design—i.e., directional antenna arrays—is intended to “enhance[]” the signal by, in part, “mitigating interference.” Ex. 1007, 6:38-48.

143. Youssefmir also provides details on the structure of frames that may be used in its TDMA communications. For instance, as shown in Fig. 3A-C, below, an example frame comprises a number of downlink slots (*e.g.*, D1, D2, etc.) and a number of uplink slots (*e.g.*, U1, U2, etc.), which allow for transmission to multiple different user terminals in one frame. Ex. 1007, 18:15-19:8. Downlink data for different subscribers may be assigned to different downlink slots, thus each frame may contain downlink data for multiple subscribers.

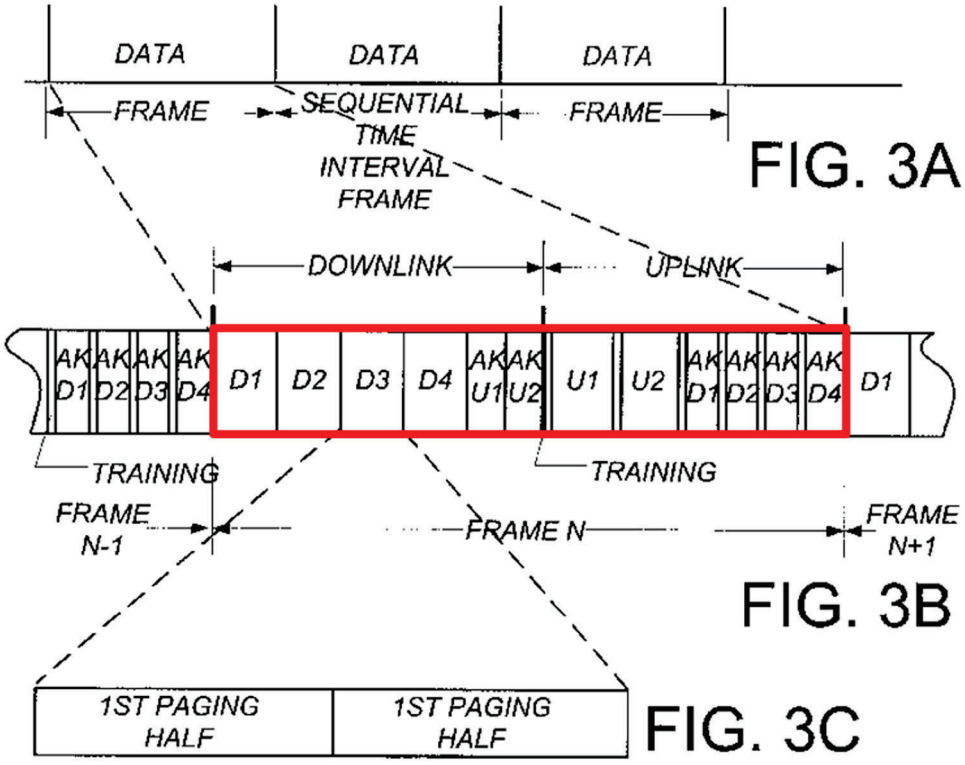

Ex. 1007, Fig. 3A-C.

144. While Youssefmir does not explicitly state that the different downlink slots D1, D2 would be allocated to user terminals in different sectors, such a frame

design was already known in the field, as discussed in detail above with respect to Atsuta (see Sec. VIII(B), supra). Atsuta describes transmitting to subscribers in different sectors within a single frame by employing a frame structure in which different timeslots are allocated to subscribers in different sectors. Ex. 1005, 6:24-58.

B. Motivation to Combine Youssefmir and Atsuta

145. A POSA would have been motivated to combine Youssefmir and Atsuta for at least the same reasons discussed above with respect to the combination of Vornefeld and Atsuta, including simplifying the necessary signal processing circuitry. Both are directed to TDMA frame-structured communication between a base station and subscribers. Moreover, Youssefmir describes transmitting downlink data to multiple subscribers in a single frame, and Atsuta provides additional detail by describing that the different subscribers may be in different sectors. Ex. 1007, 24:18-34; Ex. 1005, 6:24-58. Youssefmir recognizes cell site sectorization (Ex. 1007, 9:13-19, 14:5-19), thus implementing Atsuta's feature of assigning timeslots to subscribers in different sectors into Youssefmir's TDD frame structure would have been a simple and obvious design choice. And by implementing Atsuta's features, Youssefmir receives the benefit of simplified hardware requirements.

PETITIONER NOKIA
Ex.1002

146. Atsuta's method also allows the signal processing circuitry to be simplified, reducing its size and power consumption. Ex. 1005, 2:60-64. Because Atsuta merely describes details about frame structures and timeslot data assignments that are already suggested by Youssefmir's system, this combination would not result in any difference in function.

147. A POSA would have also had a reasonable expectation of success in combining Atsuta and Youssefmir. Atsuta's description of transmitting to subscribers in different sectors within a single frame matches Youssefmir's protocol, which also transmits to multiple subscribers within a single frame. Ex. 1007, 24:18-34. Youssefmir recognizes what the POSA already knew, namely that the cell area may be sectorized and that an antenna array can send downlink data to the desired subscribers in their respective sectors in the necessary timeslot. Ex. 1007, 1:35-40, 6:38-48, 9:13-19, 14:5-19.

148. I have considered whether the combined solution would have any disadvantages and I am not aware of any disadvantages that would dissuade a POSA from even considering the combination. Youssefmir and Atsuta both describe transmitting to different subscribers within a single frame, and Atsuta describes the additional feature that these subscribers may be located in different sectors.

PETITIONER NOKIA
Ex.1002

C. Independent Claim 1

Claim 1[a]: "For use in a wireless access network comprising a plurality of base stations, each of said plurality of base stations capable of bidirectional time division duplex (TDD) communication with wireless access devices disposed at a plurality of subscriber premises in an associated cell site of said wireless access network,"

149. Youssefmir describes and/or suggests "a wireless access network comprising a plurality of base stations," in that it describes a "cellular wireless communication system 100 having at least two base stations." Ex. 1007, Fig. 1, 4:33-47. Further, "each of said plurality of base stations [is] capable of bidirectional time division duplex (TDD) communication," because Youssefmir describes using "time domain duplexing (TDD), so that the uplink and downlink frequency between a particular user terminal and its associated base station are the same." Ex. 1007, 7:1-7, 23:36-39.

150. Further, Youssefmir suggests that its TDD design involves "communication with wireless access devices disposed at a plurality of subscriber premises in an associated cell site of said wireless access network." Specifically, Youssefmir describes "a plurality of remote, possibly mobile user terminals" that conduct wireless TDD communication with the base station. Ex. 1007, Fig. 1, 4:33-47, 7:1-7, 26:36-39. These user terminals may be mobile (*e.g.*, a "cellular telephone") or fixed (*e.g.*, a "computer" or "video monitor"). Ex. 1007, 2:41-63, 4:33-48, 5:46-65. These "user terminals" dispersed throughout a cell site qualify as

PETITIONER NOKIA
Ex.1002

"wireless access devices disposed at a plurality of subscriber premises in an associated cell site." See Ex. 1007, Fig. 1.

Claim 1[b]: "a transceiver associated with a first of said plurality of base stations comprising:"

151. Youssefmir explains that each base station includes at least one transceiver 206/227 for use in a wireless access network. See Ex. 1007, 4:54-62 ("transceivers"), Fig. 1. Figures 2A and 2B illustrate embodiments of these transceivers. Ex. 1007, 1:29-56.

PETITIONER NOKIA
Ex.1002

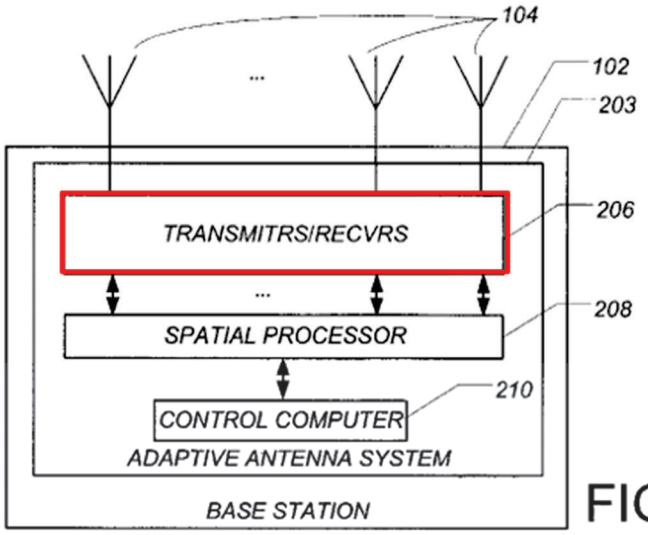

FIG. 2A

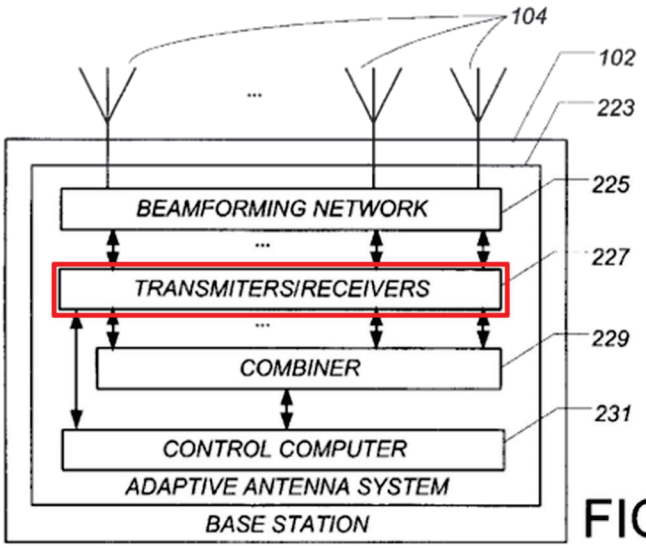

FIG. 2B

Ex. 107, Figs. 2A-B.

Claim 1[c]: "transmit path circuitry associated with a beam forming network capable of transmitting directed scanning beam signals each directed to substantially only wireless access devices within a different one of a plurality of sectors of a cell site associated with said first base station,"

152. Regarding "transmit path circuitry associated with a beam forming network," Youssefmir describes an adaptive antenna system with a beamforming network, transceivers, combiner, and control computer. Ex. 1007, Fig 2B, 7:33-60.

These elements comprise hardware components that may be controlled by one or more processors. Ex. 1007, 28:39-29:12. A POSA would understand that this disclosure suggests "transmit path circuitry."

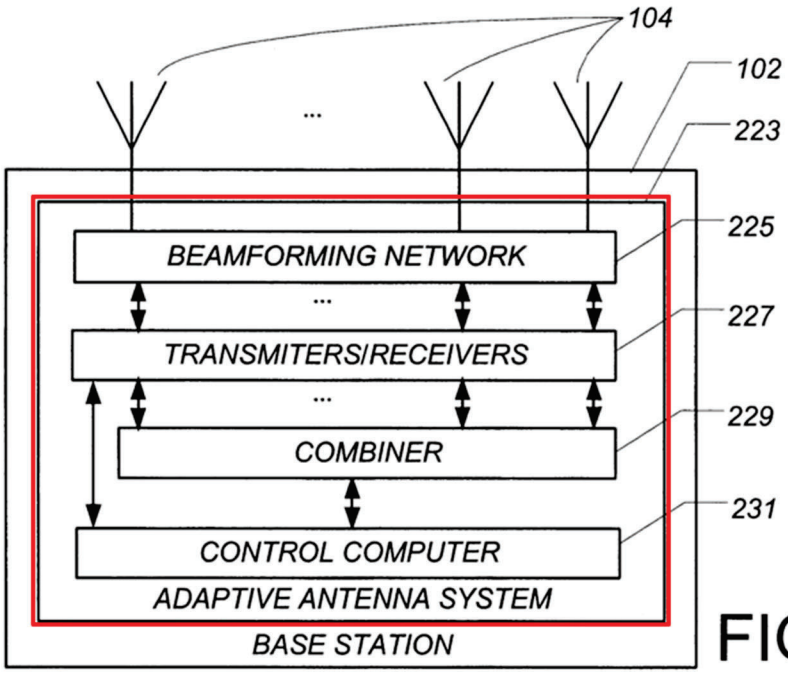

FIG. 2B

Ex. 1007, Fig. 2B.

153. Regarding "a beam forming network capable of transmitting directed scanning beam signals each directed to substantially only wireless access devices within a different one of a plurality of sectors of a cell site," Youssefmir describes a base station transceiver capable of transmitting downlink data directionally to remote users. Ex. 1007, 1:35-51 ("it is desirable to use directional antenna systems such as smart antenna systems"), 4:34-48 ("a smart antenna system that has an array of antenna elements"), 6:23-37. Moreover, Youssefmir describes using an antenna array to transmit different beams to different sectors of the cell site. Ex.

1007, 5:31-40 ("smart antenna system has an array of antenna elements, a beamforming network that forms a set of fixed beams for the antenna elements"), 6:23-48 ("With SDMA, more than one user terminal associated with the first base station can communicate with the first base station on the uplink on the same "conventional" channel . . . so long as the co-channel remote users are spatially separated"), 9:13-19 ("sectorized system"; "within the sector"), 14:5-19. In particular, Youssefmir describes using the beams in a directional manner to mitigate interference, just like the '931 Patent. Ex. 1007, 5:31-40, 7:62-8:4, 14:5-19, 9:13-19; Ex.1001, 26:10-42. The base station antenna arrays described in Figs. 2A and 2B transmit throughout the cell site (Ex. 1007, 7:33-61, 8:5-12), and therefore, in a sectorized cell site, would be understood to a POSA to transmit directed scanning beam signals each directed to substantially only devices within their respective sectors of the cell site.

Claim 1[d]: "wherein said transmit path circuitry transmits, at a start of a TDD frame, a broadcast beam signal to wireless access devices within more than one of said sectors, the broadcast beam signal comprising a start of frame field, and"

154. Regarding "transmit[ting], at a start of a TDD frame, a broadcast beam signal," Youssefmir describes the use of TDD frames, as shown in Figs. 3, 4, and 5. Ex. 1007, 17:50-59, 18:15-19:29, 23:35-50, 24:11-45, 25:52-26:11. At the start of each TDD frame, Youssefmir describes sending a "signaling segment" and

"frame marker," as shown below with respect to Figs. 5A-C. Ex. 1007, Figs. 5A-5C, 18:23-33. The signaling segment and frame marker coordinate the remote user terminals to the timing sequence of the base station. Ex. 1007, 25:52-62.

PETITIONER NOKIA
Ex.1002

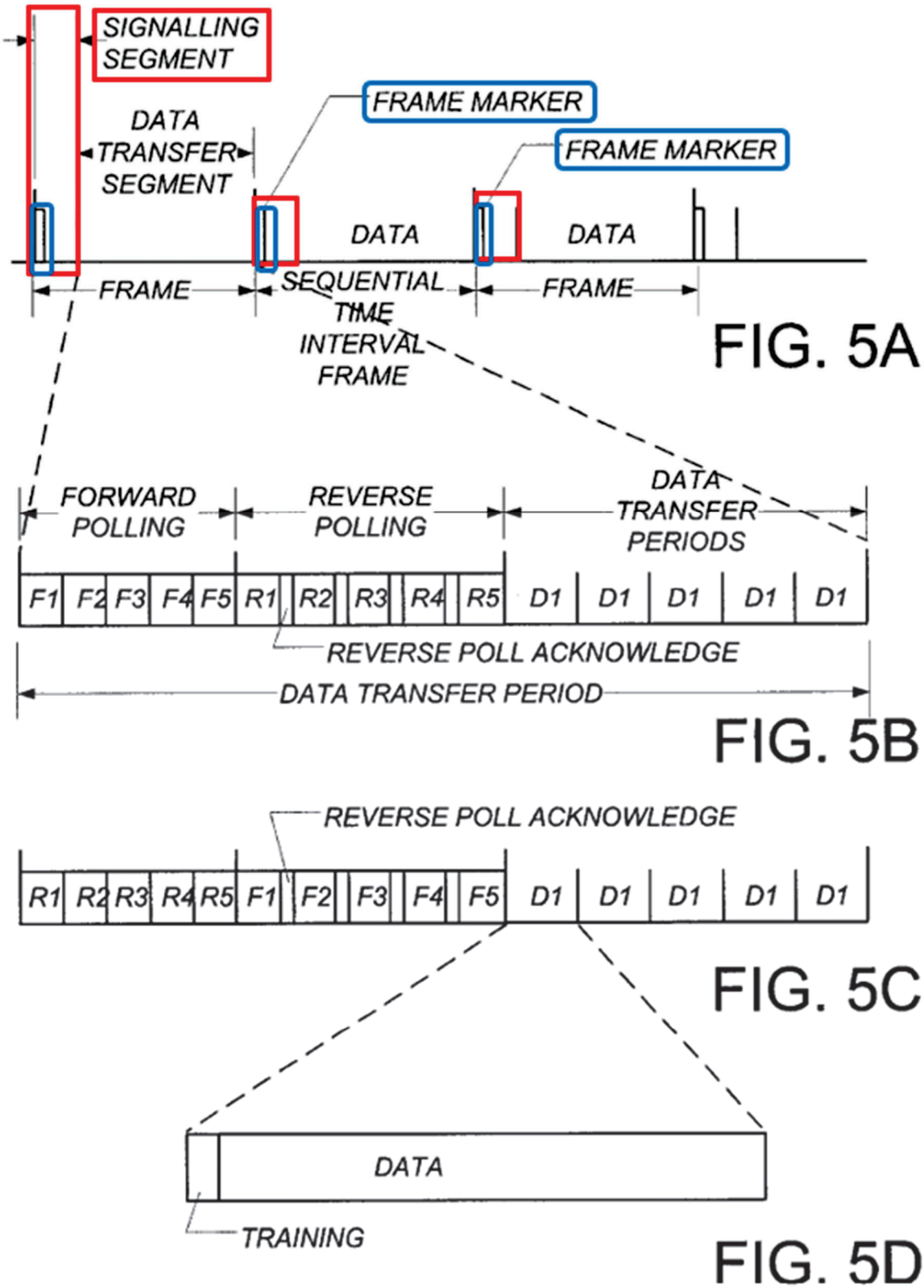

Ex. 1007, Figs. 5A-5C; *see also* Figs. 3A-C.

PETITIONER NOKIA
Ex.1002

155. Regarding transmitting the starting signal to "wireless access devices within more than one of said sectors," Youssefmir's signaling segment and frame marker are sent to all users in the cell site to coordinate the timing sequence with the base station. Ex. 1007, Fig. 5A. As Youssefmir explains, the cell site may be sectorized such that the transmission would be to devices across sectors since subscribers in different sectors would be receiving the transmission. Ex. 1007, 9:6-19, 14:13-19; *see also* Ex. 1005, 1:13-24 (explaining that the conventional sector system, as referred to by Youssefmir, uses different antenna apparatuses for different sectors to form a "fan-shaped beam antenna" for each sector). Thus, those starting signals are sent to all sectors of the cell.

156. Regarding "the broadcast beam signal comprising a start of frame field," a POSA would understand that the "signaling segment" is a "start of frame field" because, as shown above with respect to Fig. 5A, the signaling segment appears at the start of the frame. This signaling segment may include base station identification, timing, and synchronization data that coordinates subscribers to the base station.

Claim 1[e]: "subsequently transmits, in a downlink portion of said TDD frame, first downlink data traffic to substantially only wireless access devices within one of said sectors using one of said directed scanning beam signals."

157. Regarding "subsequently transmit[ting], in a downlink portion of said TDD frame, first downlink data traffic," Youssefmir's Fig. 5 illustrates that,

PETITIONER NOKIA
Ex.1002

subsequent to the signaling segment at the start of the TDD frame, multiple data slots are reserved for downlink data traffic, as shown below. Ex. 1007, 13:12-24, 25:52-26:11, Figs. 3-5.

PETITIONER NOKIA
Ex.1002

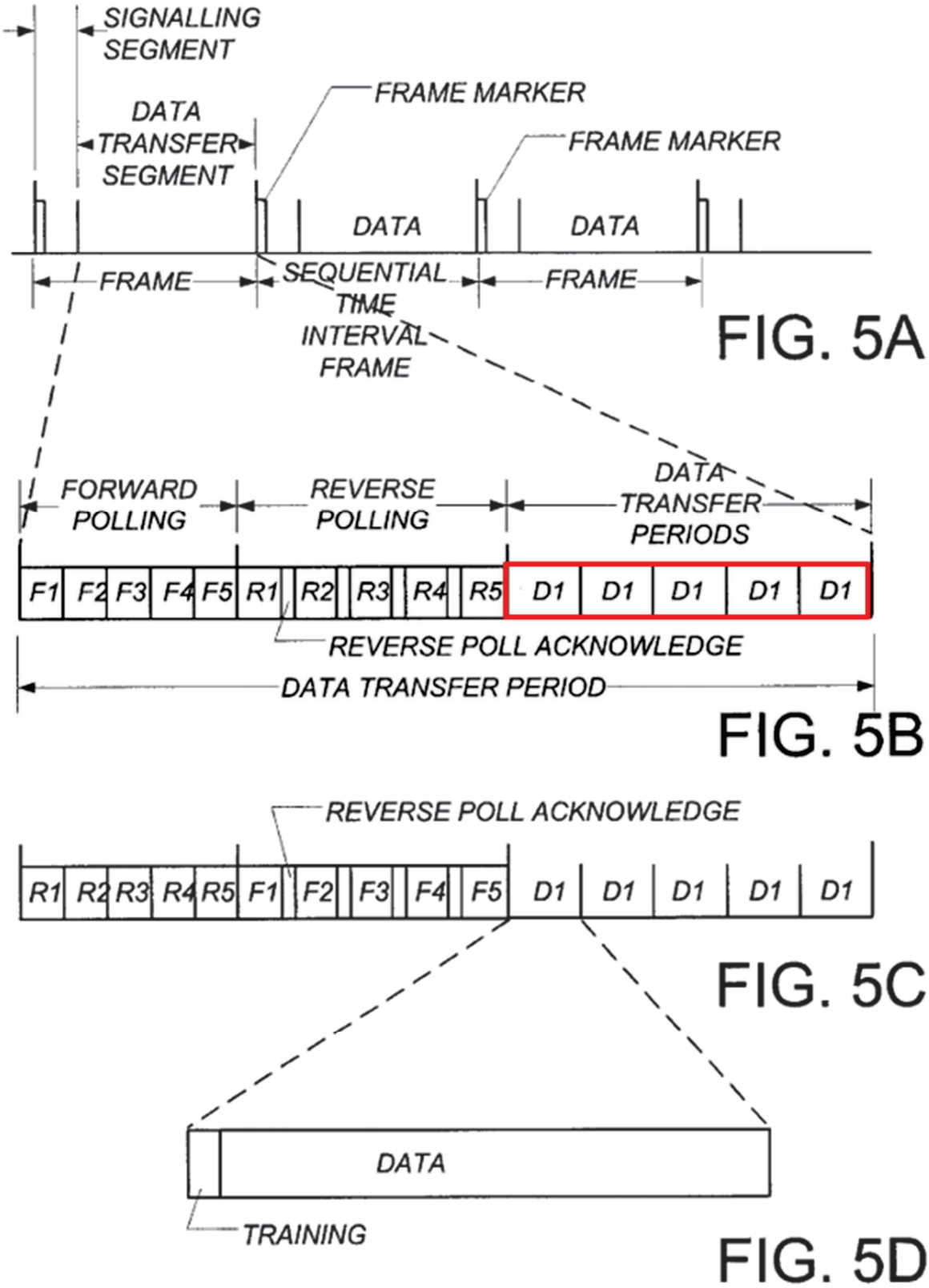

Ex. 1007, Figs. 5A-5D.

PETITIONER NOKIA
Ex.1002

158. Regarding transmitting downlink data "to substantially only wireless access devices within one of said sectors," as discussed above, Youssefmir describes using "directional signal patterns" to transmit to subscribers in a particular sector. Ex. 1007, 7:33-8:39; 9:13-19, 14:12-19. Moreover, Atsuta further clarifies that a sectorized system uses "fan-shaped beam antenna" for each sector. Ex. 1005, 1:13-24. By transmitting to a particular sector, Youssefmir's system is able to "transmit downlink data to substantially only wireless access devices within one of said sectors."

159. Regarding the transmission "using one of said directed scanning beam signals," Youssefmir describes using a smart antenna system and a beamforming network to transmit downlink data to a particular subscriber in a particular sector. Ex. 1007, 1:40-55, 5:31-40, 6:23-67, 7:33-61, Abstract. Youssefmir states that the smart antenna system is able to transmit a "directional signal pattern" that enhances the signal from the base station to the user terminal. Ex. 1007, 6:38-48. The use of a smart antenna system and a beamforming network to transmit data using a fixed beam suggests the use of a "directed scanning beam signal."

D. Dependent Claim 28

Claim 28[p]: "The transceiver as set forth in claim 1"

160. For the reasons established above in Sec. X(A), this claim is obvious over Youssefmir in view of Atsuta.

PETITIONER NOKIA
Ex.1002

Claim 28[a]: "wherein said transmit path circuitry transmits, in said downlink portion of said TDD frame, second downlink data traffic to substantially only wireless access devices within an other of said sectors using an other of said directed scanning beam signals."

161. As discussed above, Youssefmir describes transmitting downlink data from a base station to subscribers throughout the cell site within a single TDD frame. Ex. 1007, 13:1-44, 18:66-19:8, 24:18-34. And Atsuta describes transmitting to subscribers in different sectors within a single TDD frame. Ex. 1005, 6:24-61, Fig. 3.

162. To begin, regarding "transmit path circuitry," as established above in Sec. X(A), Youssefmir describes an adaptive antenna system with a beamforming network, transceivers, combiner, and control computer. Ex. 1007, Fig. 2b, 7:33-60.

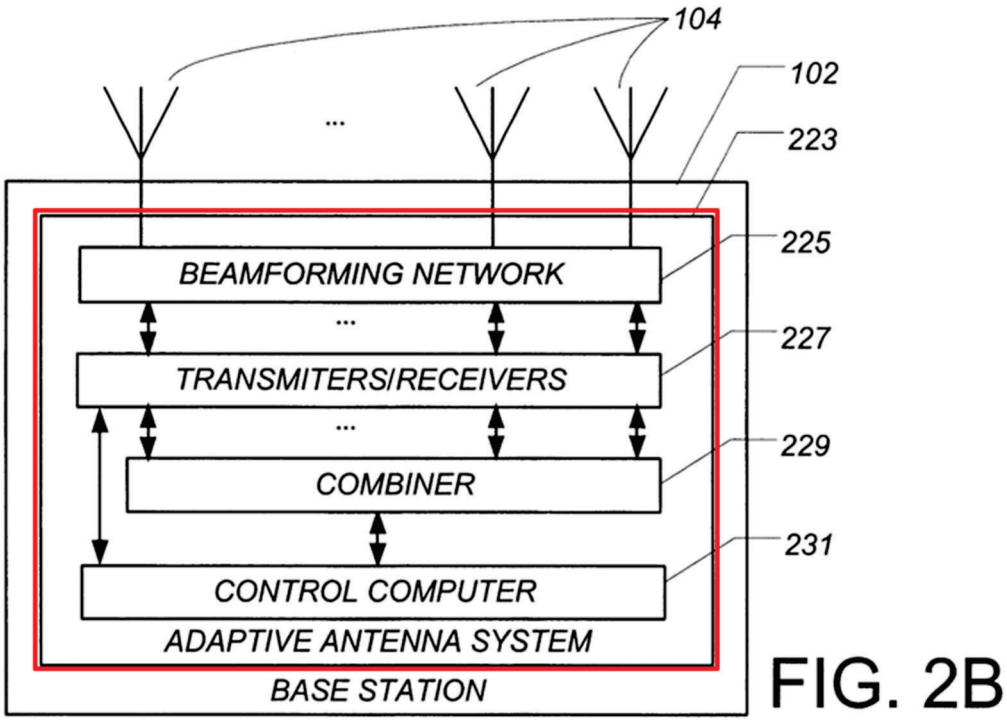

Ex. 1007, Fig. 2B.

163. Atsuta also describes "transmit path circuitry" in the form of a control circuit, modulating circuit, separating unit, frequency converters, and power amplifiers. Ex. 1005, 6:35-64, Fig 4.

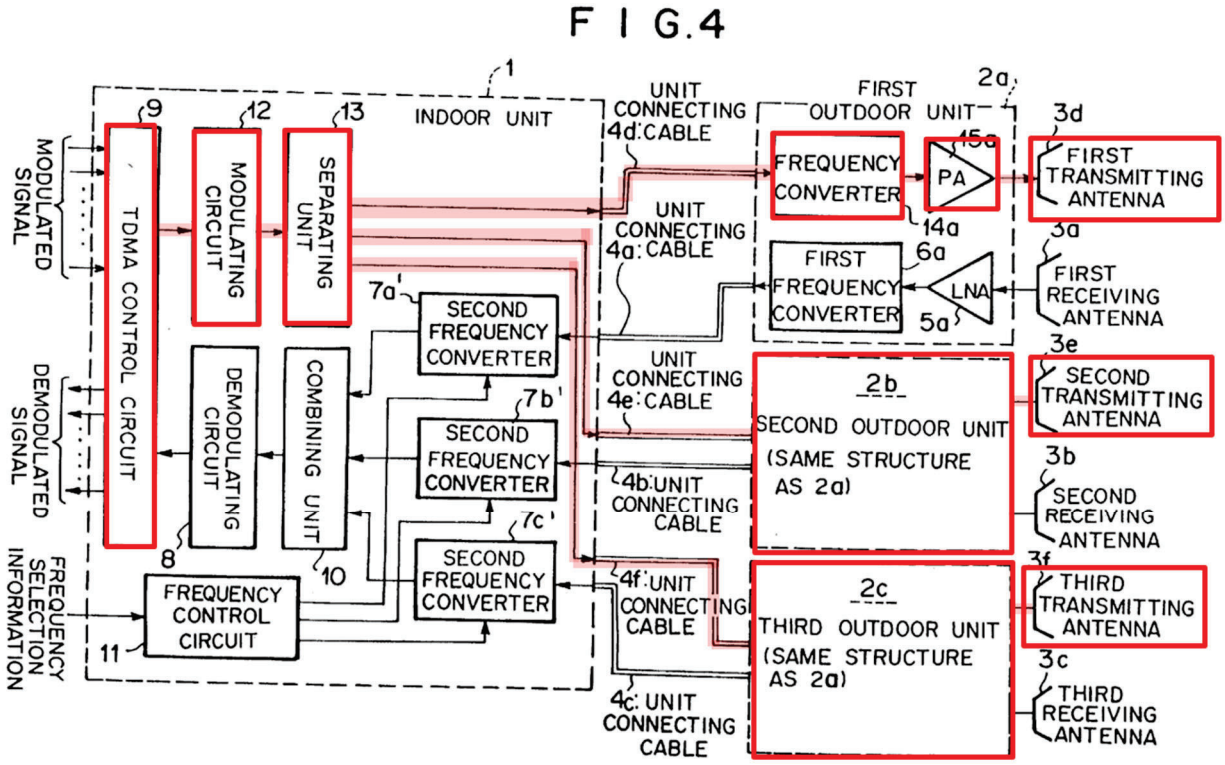

Ex. 1005, Fig. 4.

164. Both Youssefmir's "adaptive antenna system" and Atsuta's "indoor unit" are used to transmit downlink data from the base station to subscribers. Ex. 1007, 7:33-8:12, Abstract; Ex. 1005, 6:35-58. Both utilize a "control unit"— *e.g.*, a "control computer" in Youssefmir and a "control circuit" in Atsuta—to handle downlink data for all the subscribers and pass the downlink data through a "combining/separating unit" —*e.g.*, a "combiner" in Youssefmir and a "separating

unit" in Atsuta—to distribute the downlink data to the appropriate transmitting antenna array. Ex. 1007, 6:49-8:12; Ex. 1005, 6:24-61. Both these systems suggest "transmit path circuitry," as claimed.

165. Regarding "transmit[ting], in said downlink portion of said TDD frame," Youssefmir describes a TDD frame system that sends both uplink and downlink signals. Ex. 1007, 7:1-22 ("TDD"), 13:11-24, 15:15-17, 23:35-50, Fig. 4B. Each frame includes "a selected number of downlink data transfer periods (timeslot)." Ex. 1007, 13:11-24, 24:18-34. Users are assigned to these downlink timeslots. Ex. 1007, 24:18-34, Fig. 4B. Similarly, Atsuta describes TDD frame with both "up link" and "down link" capacity. Ex. 1005, 5:65-6:64. The frames described by Atsuta are TDD frames, as claimed, because they reserve timeslots for data in the uplink and downlink direction within a single "synchronous frame." Ex. 1005, 5:65-6:64.

166. Claim 1, discussed above, recites transmitting first downlink data to devices within one of the sectors. Claim 28 adds a transmission of "second downlink data to substantially only wireless access devices within an[]other of said sectors" in the same TDD frame. In Youssefmir, "each frame is divided into a selected number of downlink data transfer periods (timeslot)." Ex. 1007, 13:12-41, 24:18-34, Fig. 4B. Figure 4B below is annotated to show the downlink "data transfer periods" or timeslots. Note Fig. 4B (perhaps erroneously) labels the

PETITIONER NOKIA
Ex.1002

"downlink" timeslots U1, U2, U3, etc, and the "uplink" data timeslots D1, D2, D3, etc., but this does not affect the applicability of the information.

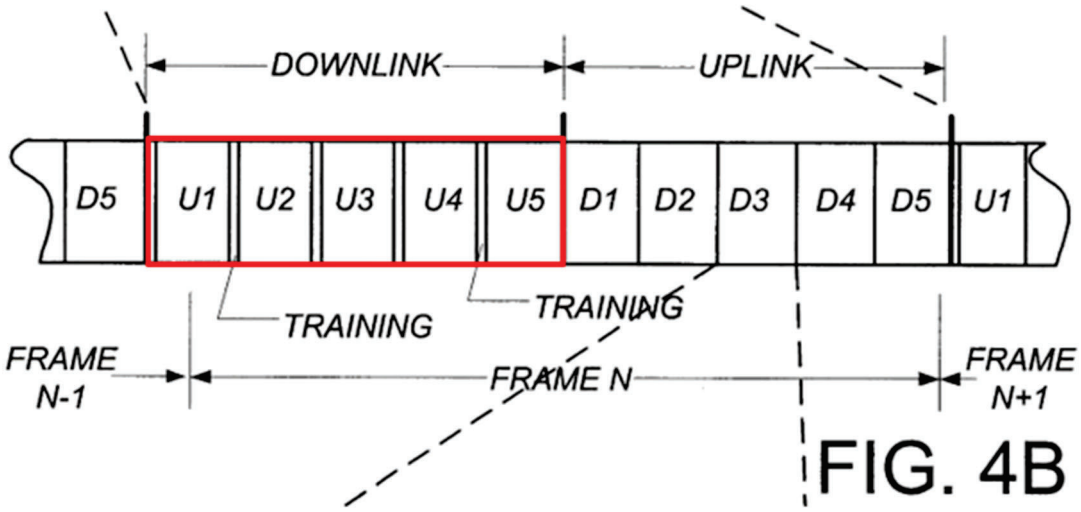

Ex. 1007, Fig. 4B.

167. Youssefmir describes assigning each downlink timeslot to a user. Ex. 1007, 24:18-34. Thus, during the first downlink timeslot U1, first downlink data is transmitted to a first user, and during the second downlink timeslot U2, second downlink data is transmitted to a second user. This occurs in a single TDD frame ("Frame N"). Thus, Youssefmir describes transmitting "second downlink data." Youssefmir does not explicitly disclose that the users assigned to certain downlink timeslot are in different sectors, but does recognize sectorization of the cell site, which was also well known at the time. Ex. 1007, 9:13-19, 14:5-19. Given that users will be located throughout a sectorized cell site, users in different sectors may assigned to downlink timeslots within a single TDD frame.

PETITIONER NOKIA
Ex.1002

168. Atsuta describes how the users in different sectors may be assigned to downlink slots in a single TDD frame. Ex. 1005, 6:24-58, Fig. 3. Atsuta's Fig. 3 (below) illustrates data transmission to subscribers in different sectors within a single TDD frame. The frame comprises 60 timeslots ("TS"), and every 20 TS is assigned to a different sector: first 20 TS to sector 1, second 20 TS to sector 2, and last 20 TS to sector 3. As discussed above, Atsuta uses the term "zone" synonymously with "sector." Ex. 1005, 1:13-25 ("using a fan-shaped beam antenna for sectoring a service area").

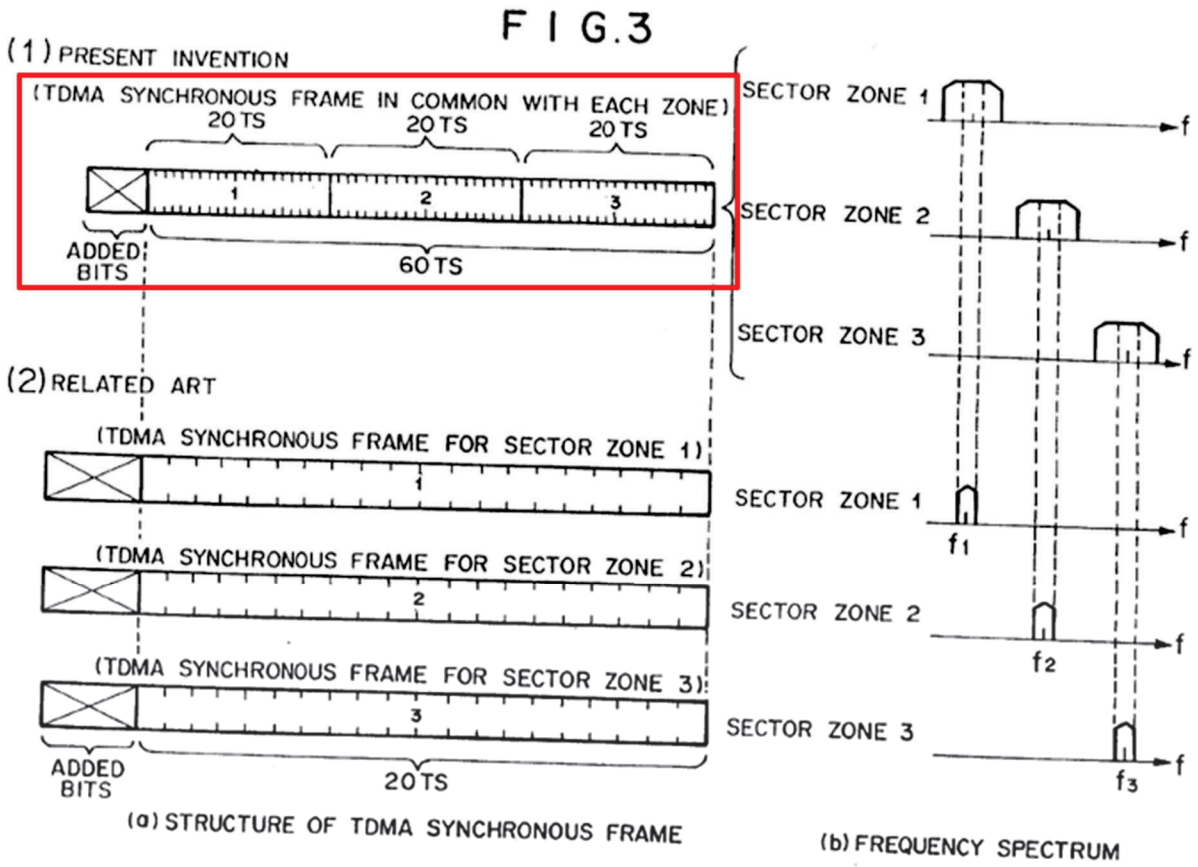

Ex. 1005, Fig. 3.

PETITIONER NOKIA
Ex.1002

169. Applying Atsuta's feature of transmitting downlink data to different sectors within a single frame to Youssefmir permits usage of simplified hardware. As discussed above in Sec. VIII(B), Atsuta's method also allows one signal processing apparatus to be used, rather than one per antenna array, thus reducing the overall size and power consumption of the signal processing structure. Ex. 1005, 2:60-64. Youssefmir recognizes that insufficient processing capabilities is a concern. Ex. 1007, 22:24-33 (suggesting "alternative embodiments" for scenarios where "the control computer does not have sufficient computational power"). Atsuta's frame structure alleviates these concerns by reducing the required number of functional circuits (and therefore the overall computational requirements) to a single circuit, while still enjoying benefits of sectorization.

170. With respect to the second transmission "using an[]other of said directed scanning beam signals," (*i.e.*, a beam different than that used to send the first traffic data to the "one sector"), it was well known that antenna arrays employ different beams to communicate with different users and different sectors. Ex. 1005, 1:13-18 ("using a fan-shaped beam antenna for sectoring a service area"); Ex. 1007, 1:29-65 ("smart antenna system may alternately be an adaptive antenna array system that includes a smart antenna processing strategy determining mechanism that can achieve an infinitely variable antenna radiation pattern"), 7:33-8:12 ("a smart antenna system that is a switched beam system"). Both Atsuta and

PETITIONER NOKIA
Ex.1002

Youssefmir describe sectorized cell sites. Ex. 1005, 1:13-65; Ex. 1007, 9:13-19, 14:5-19. Youssefmir describes using a "directional" smart antenna system with an array of antenna elements and a beamforming network to transmit downlink data from the base station to subscribers throughout the cell site. Ex. 1007, 1:35-56, 5:31-40, 6:23-67 ("the first base station is also used to transmit a signal . . . in a manner that effectively provides a directional signal pattern"), 7:33-61. Because this "directional signal pattern" is transmitted from the base station to a subscriber in their particular location, it is necessarily being sent to whatever sector the subscriber is in. Similarly, Atsuta describes sending downlink data to each sector using the directional transmitting antenna array assigned to that sector. Ex. 1005, 6:31-64 ("first to third transmission antennas . . . radiate the transmission frequency signals"), Fig. 4 ("first transmitting antenna," "second transmitting antenna," "third transmitting antenna"). In Atsuta, the downlink data meant for subscribers in different sectors is arranged into a single frame, and then transmitted using antenna arrays to each respective sector. Ex. 1005, 6:31-64.

PETITIONER NOKIA
Ex.1002

FIG.4

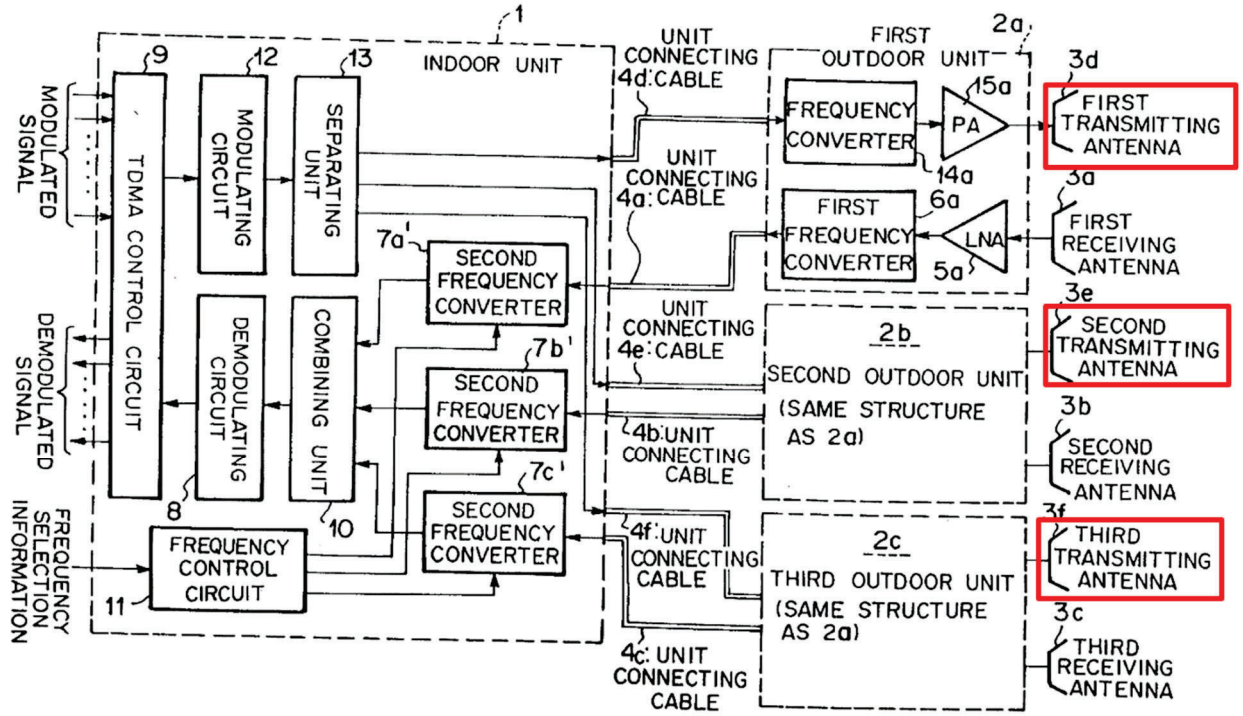

Ex. 1005, Fig. 4.

171. The use of multiple directional transmitting antenna arrays, each transmitting downlink data different users in different sectors, suggests the use of "an[]other of said directed scanning beam signals." And the use of directed scanning beam signals sending downlink data to more than one subscriber, to each subscriber's respective sector, suggests second downlink data traffic to substantially only wireless access devices within another of said sectors.

172. In addition, Atsuta's technique of transmitting to subscribers in different sectors within a single TDD frame can be incorporated into Youssefmir's system because the downlink portions of the frame are both comprised of timeslots that can be assigned to the desired subscribers. Ex. 1007, 24:18-34 ("downlink data

transfer periods D1, D2, D3, etc"), Ex. 1005, 5:21-54 ("20 timeslots assigned to subscriber stations in each fan-shaped divided zone"). The equivalent downlink data in Youssefmir Fig. 4B and Atsuta Fig. 3 are highlighted below.

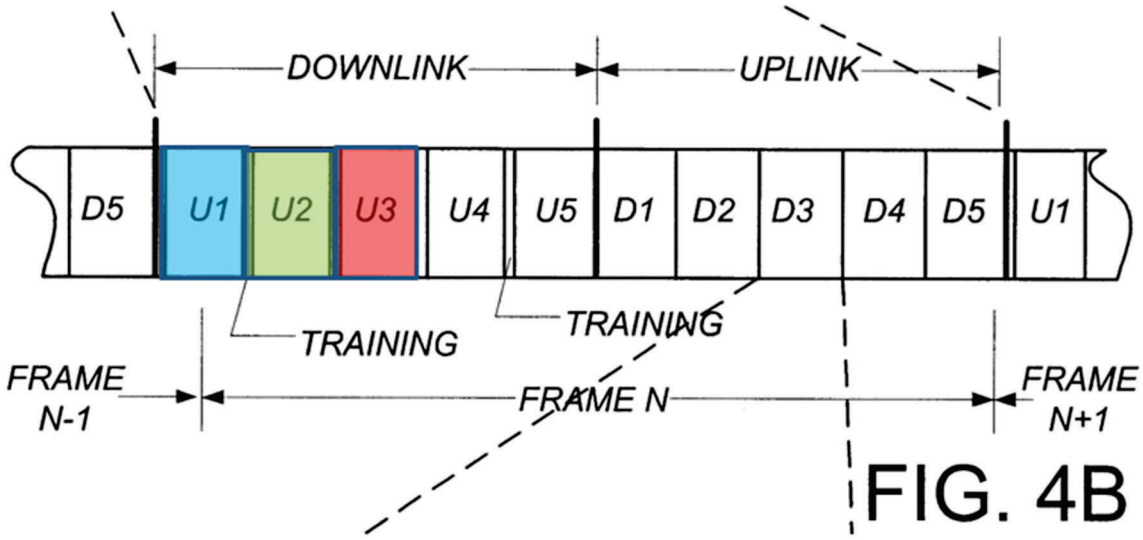

Ex. 1007, Fig. 4B.

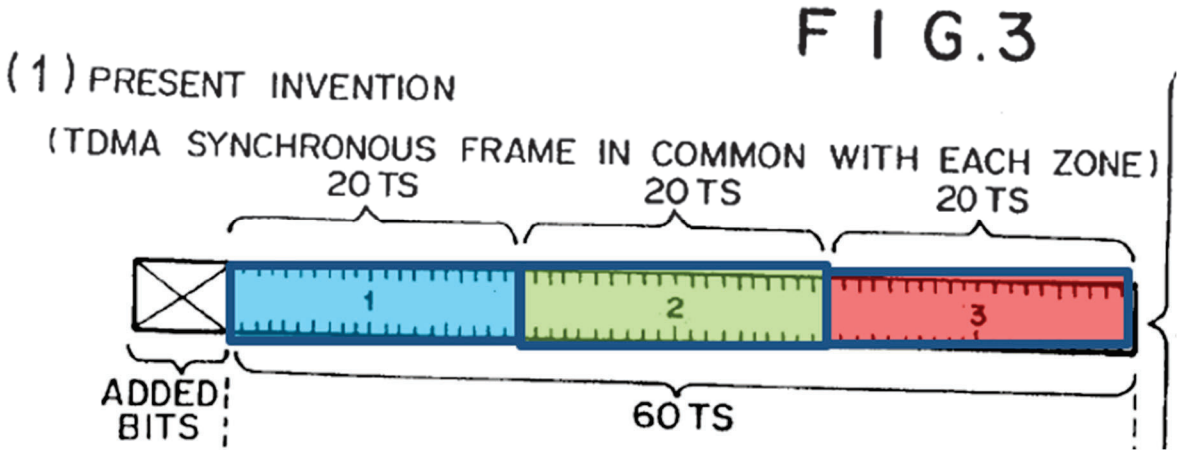

Ex. 1005, Fig. 3.

173. Atsuta assigns downlink timeslots within a single TDD frame to subscribers in different sectors, while Youssefmir also assigns downlink timeslots within a single TDD frame to subscribers, but does not specify or limit what sector that subscriber is located in. Because of the similarities of the techniques, a POSA

PETITIONER NOKIA
Ex.1002

would understand that the combination would simply mean specifying that Youssefmir's downlink timeslots are assigned to subscribers in different sectors.

E. Independent Claim 19

> **Claim 19[a]: "For use in a wireless access network comprising a plurality of base stations, each of said plurality of base stations capable of bidirectional time division duplex (TDD) communication with wireless access devices disposed at a plurality of subscriber premises in an associated cell site of said wireless access network, a method of communicating with a first of said plurality of base stations comprising the steps of:"**

174. For the reasons argued above in Sec. X(A), 1[a], this claim is obvious over Youssefmir in view of Atsuta.

> **Claim 19[b]: "transmitting, at a start of a TDD frame, a broadcast beam signal to wireless access devices within more than one of a plurality of sectors within said associated cell site,"**

175. For the reasons argued above in Sec. X(A), 1[d], this claim is obvious over Youssefmir in view of Atsuta.

> **Claim 19[c]: "the broadcast beam signal comprising a start of frame field capable of synchronizing receivers in said wireless access devices; and"**

176. Regarding a "broadcast beam signal comprising a start of frame field," Youssefmir describes the use of TDD frames, as shown in Figs. 3, 4, 5. Ex. 1007, 17:50-59, 18:15-19:29, 23:35-50, 24:11-45, 25:52-26:11. Youssefmir also describes a "signaling segment" that is broadcast at the beginning of each TDD

PETITIONER NOKIA
Ex.1002

frame from the base station to all remote users. Ex. 1007, 25:52-52, Figs. 5A-5C. Indeed, as shown below in Fig. 5A, the signaling segment appears at the start of the frame.

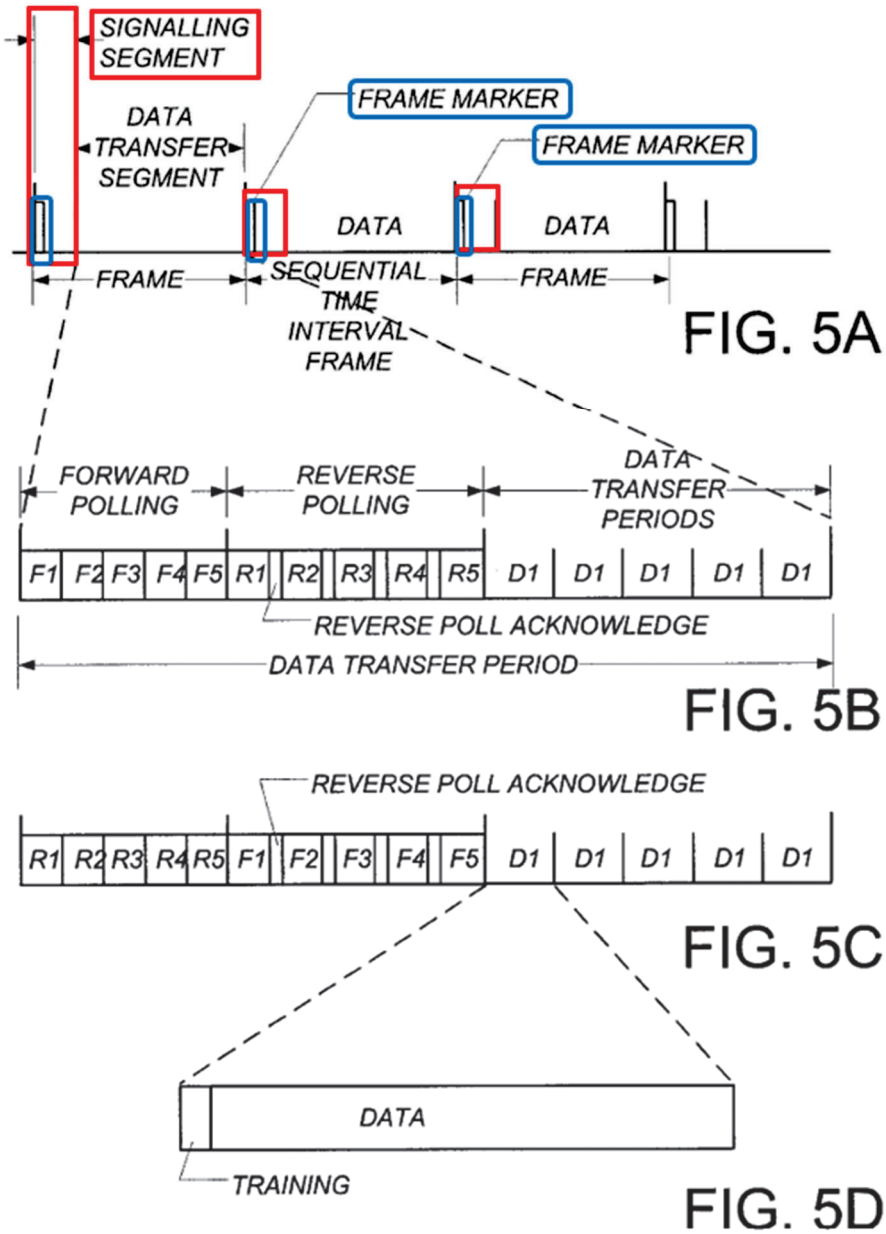

Ex. 1007, Figs. 5A-D.

177. Regarding the start of frame field being "capable of synchronizing receivers in said wireless access devices," Youssefmir describes the signaling

segment "synchroniz[ing] all remote units to the timing sequence of the base station." Ex. 1007, 25:51-62. Synchronizing remote units to the timing sequence of the base station suggests "synchronizing receivers in wireless access devices."

178. For these reasons and the reasons established above in Sec. X(A), 1[d], this claim is obvious over Youssefmir in view of Atsuta.

Claim 19[d]: "transmitting, in a downlink portion of said TDD frame, first downlink data traffic to substantially only wireless access devices in a first of said sectors using a first directed scanning beam signal."

179. For the reasons established above in Sec. X(A), 1[e], this claim is obvious over Youssefmir in view of Atsuta.

F. Dependent Claim 29

Claim 29[p]: "The method as set forth in claim 19,"

180. For the reasons established above with respect to claim 19, this element is obvious over Youssefmir in view of Atsuta.

Claim 29[a]: "further comprising: transmitting, in said downlink portion of said TDD frame, second downlink data traffic to substantially only wireless access devices in a second of said sectors using a second directed scanning beam signal."

181. For the reasons established above with respect to claim 28, this element is obvious over Youssefmir in view of Atsuta.

PETITIONER NOKIA
Ex.1002

XII. Grounds 4 and 5: The Challenged Claims are Obvious Over Vornefeld and Atsuta, in Further View of Tangemann and Over Vornefeld and Goldburg, in Further View of Tangemann

182. I understand that in a related litigation, Patent Owner uses the term "sector" to mean a "geographic portion of the cell site."

183. I also have been informed that Patent Owner's allegations in that litigation would not require that each sector have an antenna array assigned to it, as is described in the '931 patent. Ex. 1001, 12:21-46, 16:4-19. Consequently, I have been asked to consider other known methods of dividing the coverage area around a base station, including Tangemann description of "minisectors."

A. Tangemann

184. Tangemann was published in 1994.

185. Like the '931 Patent, Tangemann describes a one-to-many wireless communication system, with a base station broadcasting in a sectorized cell area. Ex. 1008, 745. Tangemann describes dividing a cell area into "minisectors," each "minisector" being a "slice" of the total cell area. Ex. 1008, 746, Fig. 2.

PETITIONER NOKIA
Ex.1002

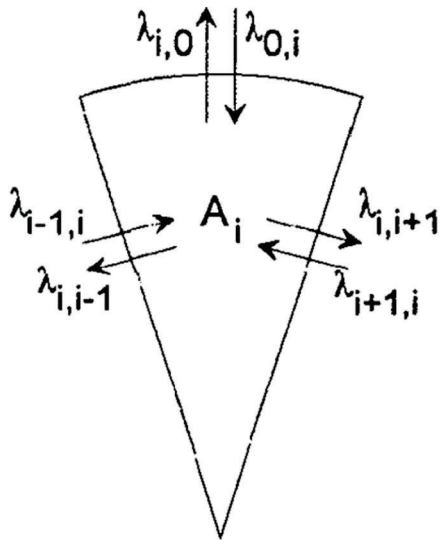

Fig. 2: Flow model for a minisector

Ex. 1008, Fig. 2.

186. Dividing the cell into minisectors allows a calculation of angular user density—how many users are in each minisector—and that information can be put into a queueing model to determine efficient transmission patterns. Ex. 1008, 746-747. Efficient transmission allows frequency channels to be re-used and reduces interference between channels. Ex. 1008, 745.

187. Tangemann's minisectors divide the cell area as needed, without regard to the transmission area of an antenna array. Ex. 1008, 746. Although this does not match the specific description of "sector" in the '931 patent—namely the area predefined by the transmission area of an antenna array—it would be useful in Vornefeld's design.

PETITIONER NOKIA
Ex.1002

B. Motivation to Combine Vornefeld and Tangemann

188. A POSA would have been motivated to combine Tangemann's minisectors with Vornefeld's system because both Tangemann describes a method to optimize the use of available frequency bandwidth and reduce transmission interference, which are both issues Vornefeld seeks to address. Both Vornefeld and Tangemann utilize SDMA techniques to broadcast throughout the cell area. Ex. 1004, Fig. 2; Ex. 1008, Fig. 1. And both attempt to optimize the use of available transmission resources while minimizing interference between transmissions. Vornefeld describes using "spatial information" of subscribers in order to direct beams to specific subscribers in specific timeslots, but does not provide the details of implementation. Ex. 1004, 52 ("algorithms make use of the spatial information in the [spatial covariance matrix]"). A POSA would look at a variety of ways to implement this functionality, including Tangemann's user mobility model using minisectors. By dividing the cell area into smaller minisectors to define subscriber locations, Tangemann allows a beamforming system to utilize targeted, narrower beams, which reduces interference to nearby subscribers, and allow the beams to transmit to substantially only subscribers within the targeted minisector.

PETITIONER NOKIA
Ex.1002

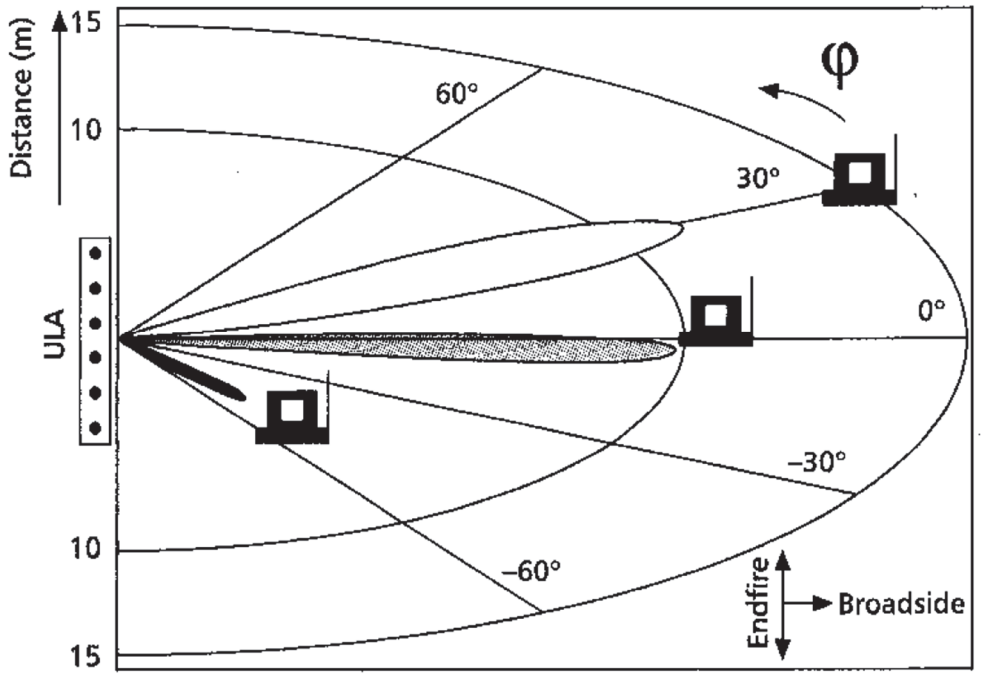

Ex. 1004, Fig. 2.

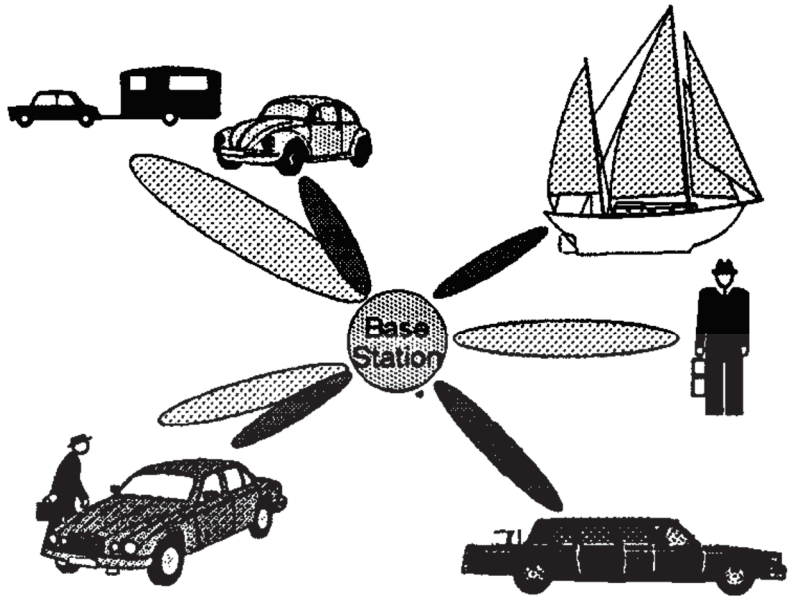

Fig. 1: Typical scenario for A-SDMA application

Ex. 1008, Fig. 1.

189. Vornefeld identifies efficient use of the available frequency bandwidth as a "crucial issue," (Ex. 1004, 52), and Tangemann's minisector and queueing model boosts this bandwidth by allowing frequencies to be re-used in

PETITIONER NOKIA
Ex.1002

different minisectors. Ex. 1008, 745-746. Vornefeld also seeks to minimize interference between transmissions (Ex. 1004, 57), and Tangemann's method of calculating angular user density using minisectors reduces transmission overlap, thereby reducing interference. Ex. 1008, 745-746.

190. Because Vornefeld recognized the need to optimize the use of available frequency resources and minimize interference, applying Tangemann's "minisectors" would have been an obvious design choice. Tangemann's method both increases frequency bandwidth by allowing frequencies to be re-used, and reduces interference between transmissions. Ex. 1008, 745-746.

191. Tangemann's details about calculating subscriber locations are suggested by Vornefeld. Ex. 1004, 52 (estimating the "directions of arrival" of each user), 55 (using "spatial input parameters" of users to schedule transmission and reception). Because of the fit between the technologies, the combination would not result in any difference in function.

192. A POSA would also have a reasonable expectation of success in combining Vornefeld and Tangemann. Tangemann's minisector technique to calculate angular user density aligns with Vornefeld's system, which already considers subscriber location. Ex. 1004, 52-53. And Vornefeld describes applying "spatial signal processing algorithms" to calculate transmission patterns; such

PETITIONER NOKIA
Ex.1002

algorithms could include Tangemann's queueing model. Ex. 1004, 52; Ex. 1008, 746.

193. With respect to the combination set forth in Ground 1, Tangemann's minisectors are compatible with the sectorization described in Atsuta. Atsuta describes a sector as the area corresponding to an antenna array. Ex. 1005, 1:13-18. Atsuta also describes tracking the density of subscribers in each sector. Ex. 1005, 3:9-13. Tangemann describes dividing the cell site into minisectors of desired width to calculate angular user density, which aligns with the goal of tracking subscriber density by sector. Ex. 1008, 746. And Tangemann's method of calculating user density operates separately from the predefined coverage patterns of the base station antenna arrays. Ex. 1008, 746. Vornefeld's antenna arrays can direct beams towards specific subscribers, which allows for transmitting downlink data to substantially only the subscriber(s) within each minisector. Ex. 1004, 52, 53, 55. Combining Tangemann with Vornefeld and Atsuta results in transmission to subscribers in different minisectors (equivalent to the "sectors" as implicitly defined by Patent Owner) within a single TDD frame.

194. With respect to the combination already set forth in Ground 2, Tangemann's minisectors are compatible with the regions described in Goldburg. Goldburg describes "regions" as areas of the cell site. Ex. 1006, 20:12-16. Both Goldburg and Tangemann describe using the location data of subscribers. Ex.

PETITIONER NOKIA
Ex.1002

1006, 6:66-7:53; Ex. 1008, 746. Tangemann's described "minisectors" can be formed independently from the intended coverage area of the base station antenna arrays. Ex. 1008, 746. And both Goldburg's "regions," as portions of a sector, and Tangemann's "minisectors," as portions of the cell area, match Patent Owner's use of "sector" to mean a "geographic portion of the cell site."

195. Adding Tangemann's minisectors to the combinations of (1) Vornefeld and Atsuta, and (2) Vornefeld and Goldburg would render obvious claims 28 and 29, particularly under Patent Owner's desired definition of sector as a "geographic portion of the cell site."

196. I have considered whether the combined solutions would have any disadvantages and I'm not aware of any disadvantages that would dissuade a POSA from even considering the combination. Vornefeld and Tangemann both seek to optimize frequency bandwidth and reduce transmission interference, and Tangemann's "minisector" method is readily applied to Vornefeld's system.

XIII. Secondary Considerations

197. From my work in the field, I am not aware of any secondary considerations, let alone ones that would affect the strong case of obviousness. I understand that secondary considerations are the Patent Owner's burden to identify.

PETITIONER NOKIA
Ex.1002

XIV. Conclusion

198. For the foregoing reasons, it is my opinion that claims 28 and 29 of the ’931 recite subject matter that would have been obvious to a POSA.

199. All statements made herein of my own knowledge are true, and all statements made on information and belief are believed to be true. Further, I am aware that these statements are made with the knowledge that willful false statements and the like so made are punishable by fine or imprisonment, or both, under 18 U.S.C. § 1001. I declare under penalty of perjury that the foregoing is true and correct.

Executed on May 26, 2023

Kevin C Almeroth

Dr. Kevin C. Almeroth

PETITIONER NOKIA
Ex.1002