ATES INTERNATIONAL TRADE COMMISSION
Washington, D.C.

In the Matter of **CERTAIN DERMATOLOGICAL TREATMENT DEVICES AND COMPONENTS THEREOF**	**Inv. No. 337-TA-1356**

ORDER NO. 35: **CONSTRUING CERTAIN TERMS OF THE ASSERTED CLAIMS (*MARKMAN* CLAIM CONSTRUCTION)**

(October 25, 2023)

Table of Contents

I. BACKGROUND 3
II. APPLICABLE LAW 5
  A. Claim Construction Generally 5
  B. Indefiniteness 7
III. THE ASSERTED PATENTS AND CLAIMS AT ISSUE 8
  A. The ’536, ’774, and ’812 Patents (Needle Assembly Patents) 8
  B. The ’836, ’379, and ’444 Patents (Na Effect Patents) 11
IV. PERSON OF ORDINARY SKILL IN THE ART 13
  A. Legal Standard 13
  B. The Adopted Definitions 13
V. ADOPTED CLAIM TERMS 15
  A. Needle Assembly Patents 15
  B. Na Effect Patents 39
VI. TERMS CONSTRUED IN THIS ORDER 67
VII. PROCEEDINGS GOING FORWARD 68
  A. Supplementation in Response to This Order 68
  B. Streamlining the Investigation 69
  C. Settlement 69
VIII. CONCLUSION 69

ILOODA EXHIBIT 1005 - 1/69

Table of Abbreviations

Compl.	Complaint
CMBr.	Complainant' *Markman* Brief
RMBr.	Respondents' *Markman* Brief
SMBr.	Staff's *Markman* sBrief
CPHMBr.	Complainant's Post-Hearing *Markman* Brief
RPHMBr.	Respondents' Post-Hearing *Markman* Brief
SPHMBr.	Staff's Post-Hearing *Markman* Brief
JCCC	Amended Joint Claim Construction Chart
PH JCCC	Post-Hearing Joint Claim Construction Chart
CXM	Complainant's *Markman* Exhibit
RXM	Respondents' *Markman* Exhibit
SXM	Staff's *Markman* Exhibit
JXM	Joint *Markman* Exhibit
MHr'g Tr.	*Markman* Hearing Transcript
PTAB	Patent and Trial and Appeal Board
IPR	*Inter Partes* Review

ILOODA EXHIBIT 1005 - 2/69

I. BACKGROUND

On April 6, 2023, the Commission instituted this Investigation pursuant to subsection (b) of Section 337 of the Tariff Act of 1930, as amended, to determine:

> whether there is a violation of subsection (a)(1)(B) of section 337 in the importation into the United States, the sale for importation, or the sale within the United States after importation of certain products identified in paragraph (2) by reason of infringement of one or more of claims 1, 2, 5-6, 9-14, 16-17, 19, and 22 of the '836 patent; claims 1-5, 7-10, and 15 of the '379 patent; claims 1-10 of the '444 patent; claims 1-2, 4-5, 8-9, 11-13, and 16-17 of the '536 patent; claims 1 and 6-15 of the '774 patent; and claims 1, 5-7, 9-10, and 12-19 of the '812 patent, and whether an industry in the United States exists as required by subsection (a)(2) of section 337[.][1]

88 Fed. Reg. 20551-53 (Apr. 6, 2023).

The Notice of Investigation ("NOI") names as complainant: Serendia, LLC of Lake Forest, CA ("Complainant" or "Serendia"). *Id*. at 20552. The NOI names as respondents: Sung Hwan E&B Co., LTD., d/b/a SHEnB Co. LTD. of Seoul, Korea; Aesthetics Biomedical, Inc. of Phoenix, AZ; Cartessa Aesthetics, LLC of Melville, NY; Lutronic Corporation of Gyeonggi-do, Korea; Lutronic Aesthetics, Inc. AKA Lutronic, Inc. of Billerica, MA; Lutronic, LLC of Billerica, MA; Ilooda Co., Ltd. of Gyeonggi-do, Korea; Cutera, Inc. of Brisbane, CA; Jeisys Medical Inc. of Seoul, Korea; Cynosure, LLC of Westford, MA; Rohrer Aesthetics, LLC of Homewood, AL;[2] Rohrer Aesthetics, Inc. of Homewood, AL;[3] EndyMed Medical Ltd. of

---

[1] The asserted patents are U.S. Patent No. 9,480,836 ("the '836 patent"), U.S. Patent No. 10,058,379 ("the '379 patent"), U.S. Patent No. 11,406,444 ("the '444 patent"), U.S. Patent No. 9,320,536 ("the '536 patent"), U.S. Patent No. 9,775,774 ("the '774 patent"), and U.S. Patent No. 10,869,812 ("the '812 patent") (collectively, the "Asserted Patents").

[2] An Initial Determination granting Respondent Rohrer Aesthetics, LLC's motion to terminate the Investigation as to Respondent Rohrer Aesthetics, LLC's based upon a consent order stipulation and proposed consent order was issued on September 18, 2023. (*See* Order No. 26 (Sept. 18, 2023), *unreviewed*, Doc. ID No. 805949 (Oct. 16, 2023).).

[3] On October 20, 2023, Complainant and Respondent Rohrer Aesthetics, Inc. jointly moved to terminate the Investigation as to Respondent Rohrer Aesthetics, Inc. based upon a settlement between the moving parties. (Motion Docket No. 1356-029 (Oct. 20, 2023).). The motion is pending.

Caesarea, Israel; EndyMed Medical, Ltd. of New York, NY; and EndyMed Medical Inc. of Freehold, NJ (collectively, "Respondents," and with Complainant, the "Private Parties"). *Id*.

Commission Investigative Staff ("Staff," and with Complainant and Respondents, the "Parties") is a party in this Investigation. *Id.*

On June 21, 2023,[4] pursuant to Order No. 10 ("Amended Adopted Procedural Schedule"), the Parties filed a Joint Claim Construction Chart. (Doc. ID No. 799011 (June 21, 2023).). On June 26, 2023, the Parties filed an amended Joint Claim Construction Chart ("JCCC"). (Doc. ID No. 799320 (June 26, 2023).).

Additionally, each of the Parties filed a *Markman* Brief. (Doc. ID No. 799251 (June 23, 2023) (CMBr.); Doc. ID No. 799427 (June 27, 2023) (RMBr.); Doc. ID No. 799773 (July 3, 2023) (SMBr.).).

Pursuant to Order No. 17, a *Markman* hearing was held on July 13, 2023 ("*Markman* Hearing"). (Order No. 17 (July 3, 2023); *see also* Doc. ID No. 805543 (Oct. 6, 2023) (MHr'g Tr.).).

On July 21, 2023, the Parties filed a Post-Hearing Joint Claim Construction Chart ("PH JCCC"). (Doc. ID No. 800737 (July 21, 2023).). The PH JCCC contains 14 agreed claim terms and 11 disputed claim terms upon which the proposed constructions referenced in this Order are based. (*Id.*).

On July 27, 2023, each of the Parties filed a Post-Hearing *Markman* Brief to address certain terms discussed during the *Markman* Hearing[5] and to brief the term "mechanism for causing the plurality of the extendable needles to extend a desired distance from the end surface"

[4] This is the official received date.

[5] *See* Mhr'g Tr. at 285:16-290:10.

ILOODA EXHIBIT 1005 - 4/69

in claim 13 of the ’774 patent (“new disputed claim term”).[6] (Doc. ID No. 801004 (July 27, 2023) (CPHMBr.); Doc. ID No. 801007 (July 27, 2023) (RPHMBr.); Doc. ID No. 800997 (July 27, 2023) (SPHMBr.).).

Complainant filed two (2) unopposed motions to partially terminate this Investigation by withdrawing certain claims. (*See* Motion Docket Nos. 1356-009 (June 22, 2023), 1356-018 (Sept. 20, 2023).). Both motions were granted. (*See* Order Nos. 16 (June 29, 2023), 27 (Sept. 25, 2023).).

On September 20, 2023,[7] the Parties filed a Joint Notice Regarding Mooted Claim Constructions (“Joint Notice”). (Doc. ID No. 804524 (Sept. 20, 2023).). In the Joint Notice, the Parties identified the following three (3) disputed claims terms as moot: (i) “draft shaft” (claim 13 of the ’536 patent); (ii) “energiz[e/ing] the plurality of extended needles” (claims 1 and 9 of the ’536 patent); and (iii) “mechanism for causing the plurality of the extendable needles to extend a desired distance from the end surface” (claim 13 of the ’774 patent). (Joint Notice at 1.). As a result, there is a total of eight (8) disputed claim terms that are addressed in this Order.

II. APPLICABLE LAW

A. Claim Construction Generally

Claim construction begins with the language of the claims themselves. Claims should be given their ordinary and customary meaning as understood by a person of ordinary skill in the art, viewing the claim terms in the context of the entire patent. *Phillips v. AWH Corp.*, 415 F.3d 1303, 1312-13 (Fed. Cir. 2005). In some cases, the plain and ordinary meaning of claim

[6] *See* Order No. 20 (July 5, 2023) (granting Rohrer’s motion for leave to raise the new disputed claim term after applicable claim construction deadlines). The new disputed claim term was not addressed during the *Markman* Hearing.

[7] This is the official received date.

ILOODA EXHIBIT 1005 - 5/69

language is readily apparent and claim construction will involve little more than "the application of the widely-accepted meaning of commonly understood words." *Id.* at 1314. In other cases, claim terms have a specialized meaning and it is necessary to determine what a person of ordinary skill in the art would have understood disputed claim language to mean by analyzing "the words of the claims themselves, the remainder of the specification, the prosecution history, and extrinsic evidence concerning relevant scientific principles, as well as the meaning of technical terms, and the state of the art." *Id*. (quoting *Innova/Pure Water, Inc. v. Safari Water Filtration Sys., Inc.*, 381 F.3d 1111, 1116 (Fed. Cir. 2004)).

The claims themselves provide substantial guidance with regard to the meaning of disputed claim language. *Phillips*, 415 F.3d at 1314. "[T]he context in which a term is used in the asserted claim can be highly instructive." *Id.* Similarly, other claims of the patent at issue, regardless of whether they have been asserted against respondents, may show the scope and meaning of disputed claim language. *Id.*

In cases in which the meaning of a disputed claim term in the context of the patent's claims is uncertain, the specification is the "single best guide to the meaning of a disputed term." *Id.* at 1321. Moreover, "[t]he construction that stays true to the claim language and most naturally aligns with the patent's description of the invention will be, in the end, the correct construction." *Id*. at 1316. As a general rule, however, the particular examples or embodiments discussed in the specification are not to be read into the claims as limitations. *Id.* at 1323.

The prosecution history may also explain the meaning of claim language, although "it often lacks the clarity of the specification and thus is less useful for claim construction purposes." *Id.* at 1317. The prosecution history consists of the complete record of the patent examination proceedings before the U.S. Patent and Trademark Office ("PTO"), including cited

ILOODA EXHIBIT 1005 - 6/69

prior art. *Id.* The prosecution history may reveal "how the inventor understood the invention and whether the inventor limited the invention in the course of prosecution, making the claim scope narrower than it would otherwise be." *Id.*

If the intrinsic evidence is insufficient to establish the clear meaning of a claim, a court may resort to an examination of the extrinsic evidence. *Zodiac Pool Care, Inc. v. Hoffinger Indus., Inc.*, 206 F.3d 1408, 1414 (Fed. Cir. 2000). Extrinsic evidence may shed light on the relevant art, and "consists of all evidence external to the patent and prosecution history, including expert and inventor testimony, dictionaries, and learned treatises." *Phillips*, 415 F.3d at 1317. In evaluating expert testimony, a court should disregard any expert testimony that is conclusory or "clearly at odds with the claim construction mandated by the claims themselves, the written description, and the prosecution history, in other words, with the written record of the patent." (*Id*. at 1318.). Moreover, expert testimony is only of assistance if, with respect to the disputed claim language, it identifies what the accepted meaning in the field would be to one skilled in the art. *Symantec Corp. v. Comput. Assocs. Int'l, Inc.*, 522 F.3d 1279, 1289 n.3., 1290-91 (Fed. Cir. 2008). Testimony that recites how each expert would construe the term should be accorded little or no weight. *Id*. Extrinsic evidence is inherently "less reliable" than intrinsic evidence, and "is unlikely to result in a reliable interpretation of patent claim scope unless considered in the context of the intrinsic evidence." *Phillips*, 415 F.3d at 1318-19.

Extrinsic evidence is a last resort: "[i]n those cases where the public record unambiguously describes the scope of the patented invention, reliance on any extrinsic evidence is improper." *Vitronics Corp. v. Conceptronic, Inc.*, 90 F.3d 1576, 1583 (Fed. Cir. 1996).

B. Indefiniteness

Indefiniteness must be proven by clear and convincing evidence. *See Cox Commc'ns, Inc. v. Sprint Commc'ns Co. LP*, 838 F.3d 1224, 1228 (Fed. Cir. 2016). A patent claim is not

indefinite if it "inform[s], with reasonable certainty, those skilled in the art about the scope of the invention." *Nautilus, Inc. v. Biosig Instruments, Inc.*, 572 U.S. 898, 901 (2014). The indefiniteness "inquiry trains on the understanding of a skilled artisan at the time of the patent application" and must be conducted in light of the intrinsic evidence. *Id.* at 911, 901.

III. THE ASSERTED PATENTS AND CLAIMS AT ISSUE

The Asserted Patents all share the same named inventor, Dr. Jongju Na, and are members of two (2) patent families. (*See* Compl. at ¶ 1.1, Doc. ID No. 791505 (Mar. 1, 2023).). The '536, '774, and '812 patents are members of one (1) patent family and share a common specification ("Needle Assembly Patents") (*see id.*). The '836, '379, and '444 patents are members of another patent family and share a common specification ("Na Effect Patents") (*see id.*).

According to Complainant, the Needle Assembly Patents all claim priority to U.S. Provisional Application No. 61/449080, filed on March 3, 2011. (*See* Complainant's Notice of Patent Priority Dates/Dates of Conception at 1-2, Doc. ID No. 795792 (May 5, 2023).). The Na Effect Patents all claim priority to U.S. Application No. 14/006,930, filed on June 14, 2012, and Korean Application Nos. 10-2011-0057691 and 10-2011-0057692, both filed on June 14, 2011. (*Id.* at 2-3.).

A. The '536, '774, and '812 Patents (Needle Assembly Patents)

The Needle Assembly Patents describe the claimed invention as being "used in treating derma[to]logical tissue." (JXM-0001 ('536 patent) at 1:25-27.).[8] The Needle Assembly Patents depict and describe that the "derma[to]logical treatment apparatus" comprises "a user handle 220

[8] Because the Needle Assembly Patents share a common specification, citations in this Order are to the specification of the '536 patent.

coupled to an acupuncture plate 200." (*Id.* at 2:51-55, Figs. 1A, 1B.). The plate includes "a plurality of acupuncture pins or needles 230. (*Id.* at 2:61-67; *see also id.* at Figs. 1B, 1C.).

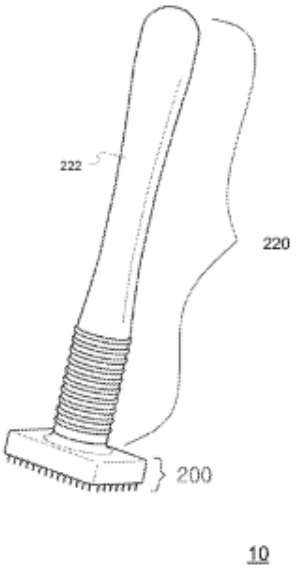

FIGURE 1A

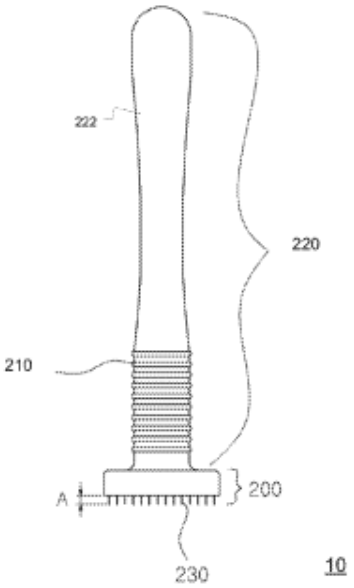

FIGURE 1B

(*Id.* at Figs. 1A, 1B.).

In operation, a user employs the apparatus "to create a plurality of micro-wounds or holes in derma[to]logical layers of mammal's [] skin or dermis." (*Id.* at 3:21-23.). Creating such micro-wounds or holes in the skin "may improve the absorption or application of one or more chemicals applied on or about the micro-wounds or holes" (*id.* at 3:23-26) and "may increase cellular activity and help heal tissue faster and facilitate the delivery, uptake and use in the cell of the cosmetics, medications, or chemicals [] used" (*id.* at 7:51-54).

To assist in creating the micro-wounds or holes in the skin, "electrical signal generation system 300 may be electrically coupled to the acupuncture apparatus 320 via one or more wires 300A and to a mammal 20 to be treated via one or more wires 300B" so as to "generate a variety of signals . . . to vibrate one or more pins 351 electrically coupled to system 300." (*Id.* at 3:27-

45, Figs. 2A-2C.). Additionally, the Needle Assembly Patents depict and describe that the dermatological treatment apparatus may include "a disposable needle module 924 . . . to be removed [from hand module 920] and disposed after one or more treatments or for each patient, client, or user." (*Id.* at 9:26-30, Figs. 9C, 9D.).

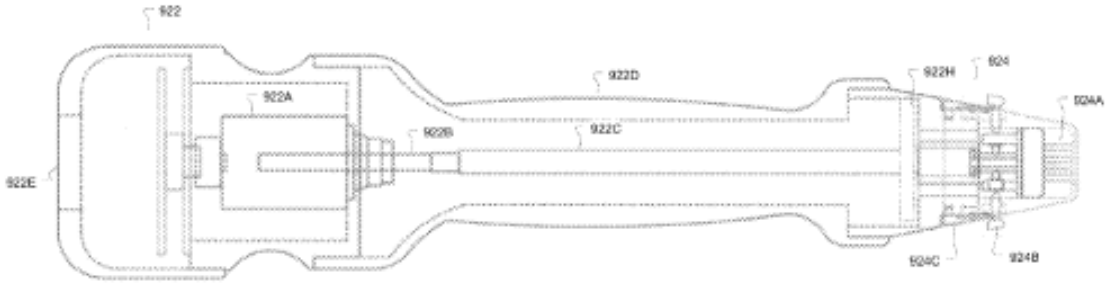

920

FIGURE 9C

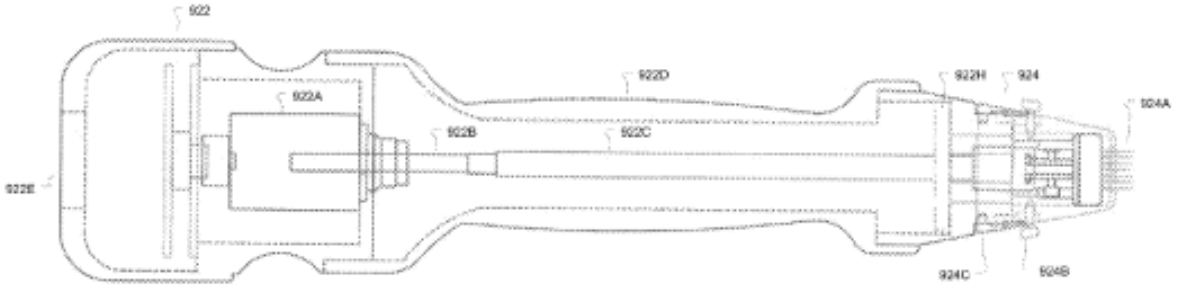

922

FIGURE 9D

(*Id.* at Figs. 9C, 9D.).

Figures 10A-10D depict how the needle module 924 can be attached and removed from the user handle. Figures 10A and 10C are depicted below.

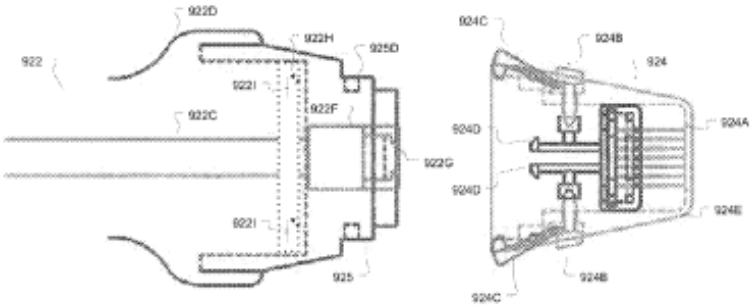

FIGURE 10A

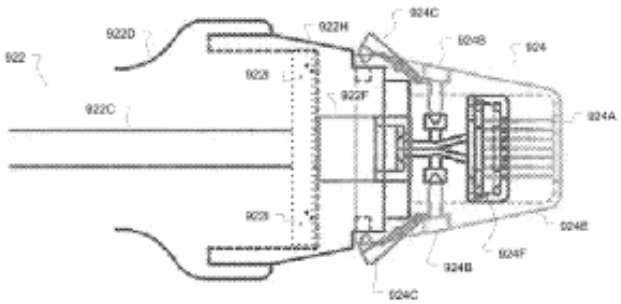

FIGURE 10C

(*Id.* at Figs. 10A, 10C.).

As depicted in Figures 10E and 11A, needles 924A can be deployed or extended from the needle module 924. (*See id.* at 2:30-32, 12:18-23, 12:41-43.). Figure 10E is depicted below.

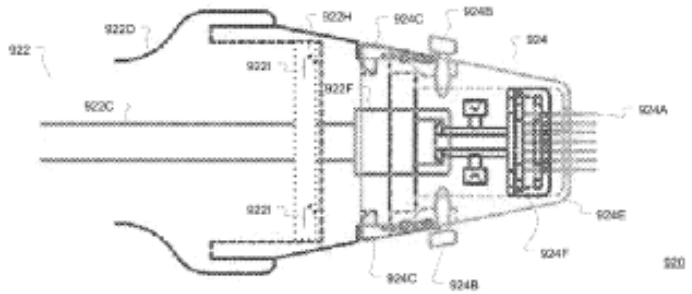

FIGURE 10E

(*Id.* at Fig. 10E.).

B. The ’836, ’379, and ’444 Patents (Na Effect Patents)

The Na Effect Patents describe the claimed invention as being “for medical treatment including skin treatment using electrical energy, especially with the primary purpose for skin treatment for aesthetics[.]” (JXM-0007 (’836 patent) at 1:24-26.).[9] The Na Effect Patents describe a “method and apparatus that provides electric stimulation directly to a body region including the dermis via needles. (*Id.* at 2:37-41.). The method purportedly “revitalizes and regenerates the body region including collagen by wounding the dermis.” (*Id.* at 2:39-41.).

[9] Because the Na Effect Patents share a common specification, citations in this Order are to the specification of the ’836 patent.

Figure 5 depicts a "a simplified diagram of treatment architecture using non insulated needles according to an embodiment[.]" (*Id.* at 4:41-43.). More specifically, Figure 5 depicts needles 300 with needle tips 302 for generating energy field 909. (*See id.* at 7:27-32 (referencing Fig. 6); *see also id.* at 9:25-26.).

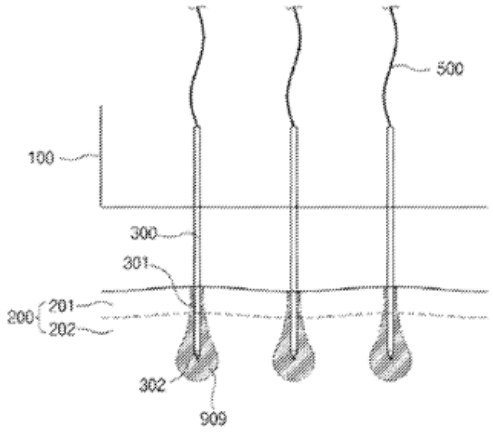

FIGURE 5

(*Id.* at Fig. 5.).

Figure 6 depicts an embodiment where "adjacent or neighboring needles may be configured to have opposite polarities (+) and (-)[.]" (*Id.* at 4:1-3.).

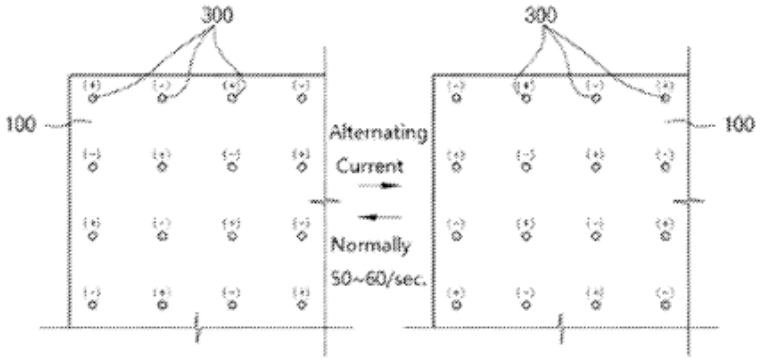

FIGURE 6

(*Id.* at Fig. 6.).

The Na Effect Patents further disclose:

> In an embodiment, the temperature is raised about the tip of each needle, not between needles. The method of the present invention may control electrical factors or distance between needles to control the energy field applied between needles. A method of the present invention may enable users to control the number of treatments in target areas by controlling the dissipated energy in needles.

(*Id.* at 3:30-36.).

IV. PERSON OF ORDINARY SKILL IN THE ART

A. Legal Standard

A hypothetical person is a person of ordinary skill and "ordinary creativity." *KSB Int'l Co. v. Teleflex, Inc.*, 550 U.S. 398, 420 (2007). "Factors that may be considered in determining [the] level of ordinary skill in the art include: (1) the educational level of the inventor[s]; (2) type of problems encountered in the art; (3) prior art solutions to the problems; (4) rapidity with which inventions are made; (5) sophistication of the technology; and (6) educational level of active workers in the field." *Envtl. Designs Ltd. v. Union Oil Co. of California*, 713 F.2d 693, 696-97 (Fed. Cir. 1983) (citations omitted). "These factors are not exhaustive but merely a guide to determining the level of ordinary skill in the art." *Daiichi Sankyo Co. v. Apotex, Inc.*, 501 F.3d 1254, 1256 (Fed. Cir. 2007).). The hypothetical person of skill is also separately presumed to have knowledge of all the relevant prior art in the field. *Custom Accessories, Inc. v. Jeffrey-Allan Indus., Inc.*, 807 F.2d 693, 697 (Fed. Cir. 1983).

B. The Adopted Definitions

Respondents propose one definition for all Asserted Patents, while Complainant proposed one definition for the Needle Assembly Patents and a somewhat similar definition for the Na Effect Patents.

For the Needle Assembly Patents, the Private Parties propose similar levels of ordinary skill in the art. The Private Parties' proposed definitions are as follows (material differences

ILOODA EXHIBIT 1005 - 13/69

identified in bold):

Complainant's Definition	Respondents' Definition
"(1) seven to ten years of experience with developing and/or using ***of tissues***, and (2) a related graduate engineering degree or M.D. and may have worked as part of a multidisciplinary team and drawn upon not only his or her own skills, but also would have taken advantage of certain specialized skills of others on the team when solving a technical problem." (CMBr. at 21 (emphasis added).).	"(1) 7-10 years of experience with developing and/or ***using treatment systems for delivery of electromagnetic radiation energy to skin or other tissues***, and (2) a related graduate engineering degree or M.D. The POSA may have worked as part of a multidisciplinary team and drawn upon not only his own skills, but also taken advantage of certain specialized skills of others on the team when solving a technical problem." (SMBr. at 14 (emphasis in original) (citing Ilooda's Supplemental Response to Serendia's Interrogatory No. 14 (June 14, 2023)); *see also* CMBr. at 21-22.).

The Patent and Trial and Appeal Board ("PTAB"), in its decision denying institution of *inter partes review* ("IPR") of the '536 patent, adopted the same definition as proposed by Respondents in this Investigation. (*See* JXM-0016 (IPR2022-00378 Decision Denying Institution of *Inter Partes Review* of the '536 Patent) at 10 (noting that "Serendia does not contest" the proposed definition).). Although there does not appear to be a material difference between the Private Parties' proposals, Respondents' proposed definition for the Needle Assembly Patents is adopted in view of the PTAB's decision and because Complainant did not dispute that definition during the IPR proceeding.

For the Na Effect Patents, Private Parties propose substantively identical levels of ordinary skill in the art. The Private Parties' proposed definitions are as follows:

Complainant's Definition	Respondents' Definition
"(1) 7-10 years of experience with developing and/or using treatment systems for delivery of electromagnetic radiation energy to skin or other tissues, and (2) a related graduate	"(1) 7-10 years of experience with developing and/or using treatment systems for delivery of electromagnetic radiation energy to skin or other tissues, and (2) a related graduate

Complainant's Definition	Respondents' Definition
engineering degree or M.D. and may have worked as part of a multidisciplinary team and drawn upon not only his or her own skills, but also would have taken advantage of certain specialized skills of others on the team when solving a technical problem." (CMBr. at 21.).	engineering degree or M.D. The POSA may have worked as part of a multidisciplinary team and drawn upon not only his own skills, but also taken advantage of certain specialized skills of others on the team when solving a technical problem." (SMBr. at 15 (citing Ilooda's Supplemental Response to Serendia's Interrogatory No. 14 (June 14, 2023)); *see also* CMBr. at 21-22.).

The Private Parties' proposed definition for the Na Effect Patents is adopted as follows: "(1) 7-10 years of experience with developing and/or using treatment systems for delivery of electromagnetic radiation energy to skin or other tissues, and (2) a related graduate engineering degree or M.D. and may have worked as part of a multidisciplinary team and drawn upon not only his or her own skills, but also would have taken advantage of certain specialized skills of others on the team when solving a technical problem."

V. ADOPTED CLAIM TERMS

A. Needle Assembly Patents

1. Agreed Upon Claim Terms

Term and Claim(s)	Agreed Construction
Preambles ('536 patent, claims 1, 11; '774 patent, claim 11;[10] '812 patent, claims 1, 12)	Preambles are limiting
"extendable needles" vs. "extended needles" /	Plain and ordinary meanings:

[10] Complainant is no longer asserting claim 11 of the '774 patent. (*See* Order No. 16 (June 29, 2023); Motion Docket No. 1356-009 (June 22, 2023); PH JCCC at 1 n.1.). Complainant included this claim in the respective charts because Complainant is still asserting claims that are dependent from claim 11. (*See, e.g.*, PH JCCC at 1 n.1.).

Term and Claim(s)	Agreed Construction
"needles one of extending or extendable" ('536 patent, claims 1, 9, 11; '774 patent, claim 11)	extendable needles: needles that can be extended [from the deployable needle assembly end surface] extended needles: needles that are extended [from the deployable needle assembly end surface] needles one of extending or extendable: needles that are either extended or can be extended [from the device surface] (needles "extending" a desired distance from the surface covers non-extendable needles having a fixed length; "extendable" needles covers needles which are not fixed)
"a plurality of needles one of extending or extendable . . . the plurality of extended needles" ('774 patent, claim 11)	Plain and ordinary meaning: two or more extendable needles or extending needles . . . the two or more extended needles
"a user holdable device releasably couplable deployable needle module end surface" ('812 patent, claim 1)	Plain and ordinary meaning: the end surface of the deployable needle module past which needles can be extended, the module is releasably couplable to a user holdable device proximal end
"a particular signal" ('536 patent, claim 11; '812 patent, claim 13)	Plain and ordinary meaning: an electrical motor control signal
"predetermined intensity" ('536 patent, claim 9; '812 patent, claim 6)	Plain and ordinary meaning: the electrical signal intensity selected for treatment

2. Disputed Claim Terms

a) "a [user holdable device releasably couplable] deployable needle assembly end surface" / "the releasably couplable deployable needle assembly end surface" ('536 patent, claims 1, 11; '812 patent, claims 1, 12)

Complainant's Proposed Construction	Respondents' Proposed Construction	Staff's Proposed Construction	Adopted Construction

the deployable needle assembly end surface is the plane defined by the tips of the needles of the deployable needle assembly when the needles are not extended, the needle assembly can be movable within a needle module that is releasably couplable to the proximal end of a user holdable device (same as Staff's construction)	the end surface of a [user holdable device] deployable needle assembly from which the plurality of needles protrude, wherein the deployable needle assembly is releasably couplable to a [user holdable device] proximal end	The deployable needle assembly end surface is the plane defined by the tips of the needles of the deployable needle assembly when the needles are not extended, the needle assembly can be movable within a needle module that is releasably couplable to the proximal end of a user holdable device	the deployable needle assembly end surface is the plane defined by the tips of the needles of the deployable needle assembly when the needles are not extended, the needle assembly can be movable within a needle module that is releasably couplable to the proximal end of a user holdable device

The Parties dispute whether the "needle assembly end surface" recited in the independent claims of the '536 and '812 patents is the plane defined by the tips of the needles when the needles are not extended (Complainant and Staff'), or whether the claims require a separate, physical planar surface (i.e., pin cover) for the recited "end surface" of the deployable needle assembly (Respondents). For the reasons discussed below, because the needles must be "extendable from . . . the end surface," Complainant and Staff's proposed construction is adopted.

Complainant and Staff's proposed construction is consistent with the claim language. For example, claim 1 of the '536 patent recites that the needle assembly's plurality of needles are extendable from the "end surface":

> 1. A method of treating dermatological tissue, comprising:
>
> placing a user holdable device releasably couplable ***deployable needle assembly end surface*** on or near dermatological tissue to be treated, the holdable device including a proximal end and the releasably couplable deployable needle assembly, the deployable needle assembly mechanically separatably from the proximal end and including ***a***

> ***plurality of needles extendable from the deployable needle assembly end surface***, one of the proximal end and the deployable needle assembly including at least one electrical conductor and the other including at least one restorably deflectable electrical contact couplable to the one of the proximal end and the deployable needle assembly at least one electrical conductor;
>
> communicating electrical signals from the proximal end to the plurality of the extendable needles;
>
> energizing a motor coupled to a plurality of extendable needles to cause ***a plurality of the extendable needles to extend a desired distance from the needle assembly end surface***; and
>
> energizing the plurality of extended needles via a signal generator electrically coupled to the plurality of extended needles.

(JXM-0001 at claim 1 (emphases added).).[11]

In relevant part, the claim recites: (1) a deployable needle assembly including a plurality of needles ***extendable*** from the assembly end surface; (2) placing the deployable needle assembly end surface on/near tissue to be treated; and (3) causing the extendable needles to ***extend from the needle assembly end surface***. (*Id.*). Accordingly, Complainant and Staff's proposed construction, which refers to the tips of the needles before the needles are extended, is supported by the words of the claim themselves (i.e., "extendable ***from*** . . ."). (*See id.* (emphasis added).). Complainant and Staff's proposed construction is also consistent with the Parties' agreed upon construction of the term "extendable needles": "needles that can be extended [from the deployable needle assembly end surface]." (*See* PH JCCC at 1.).

Additionally, the claims of the '536 and '812 patents explain how the needles are extended from the "needle assembly end surface." Claim 1 of the '536 patent specifies that a

---

[11] Claim 1 of the '536 patent is a method claim. (*See* JXM-0001 at cl. 1.). Claim 11 of the '536 patent is the apparatus counterpart to claim 1's method. (*See id.* at cl. 11.). Claim 1 of the '812 patent is also a method claim and recites similar language with the additional requirement that the deployable needle assembly is a component of, and movable within, a deployable needle module. (*See* JXM-0005 at cl. 1.).

The "end surface" of the deployable needle module is separately claimed and addressed herein as an agreed-upon construction. (*See* Section V.A.1, *supra*.).

"motor" is used to extend the needles "from the needle assembly end surface." (JXM-0001 at cl. 1.). Claim 1 of the '812 patent recites that the needle assembly is "movable within" a "needle module to extend" the needles from the "needle assembly end surface." (JXM-0005 at cl. 1.).

Moreover, Complainant and Staff's proposed construction is supported by the specifications of the '536 and '812 patents.[12] The common specification identifies the needle assembly and explains both how a motor is used to extend the needles and how a needle assembly moves within a needle module to extend the needles. The needle assembly 924F is shown in Figure 11B below. (*See* JXM-0001 at 2:40-41, 12:64-66.).

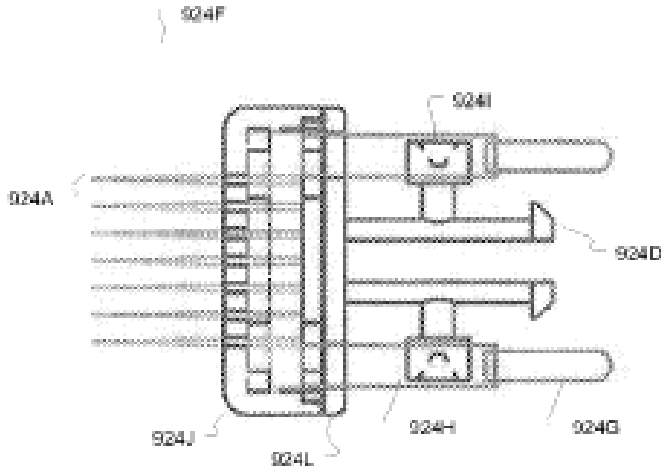

FIGURE 11B

(*Id.* at Fig. 11B.).

Figure 11A, below, depicts needle assembly 924F (rotated 180º compared to Figure 11B above) within the needle module 924 "with needles 924A deployed." (*Id.* at 12:41-42.).

[12] As discussed in Section III, *supra*, the Needle Assembly Patents share a common specification.

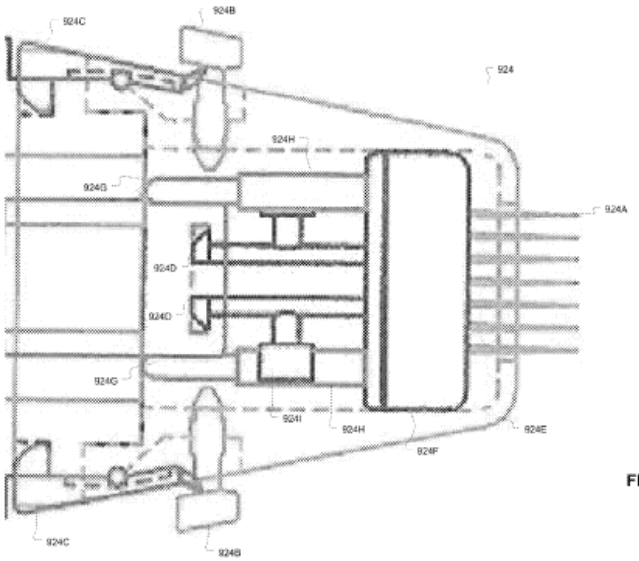

FIGURE 11A

(*Id.* at Fig. 11A.).

The "needle assembly 924F is moved" to deploy the needles. (*Id.* at 12:60-64.). As shown in Figures 9C and 9D below, a motor 922A coupled to a drive shaft 922C can "drive the one or more needles 924A" from a "retracted" position (Figure 9C) to a "deployed" position (Figure 9D) by moving the needle assembly forward within the needle module 924. (*Id.* at 11:27-31.).

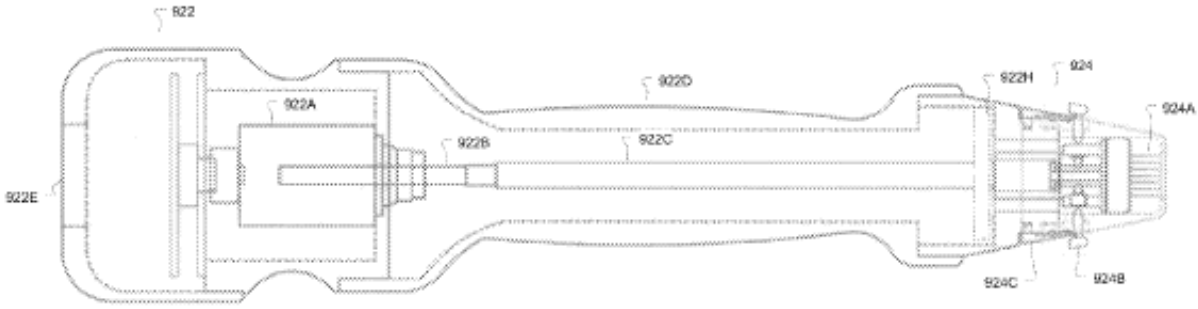

920

FIGURE 9C

(*Id.* at Fig. 9C.).

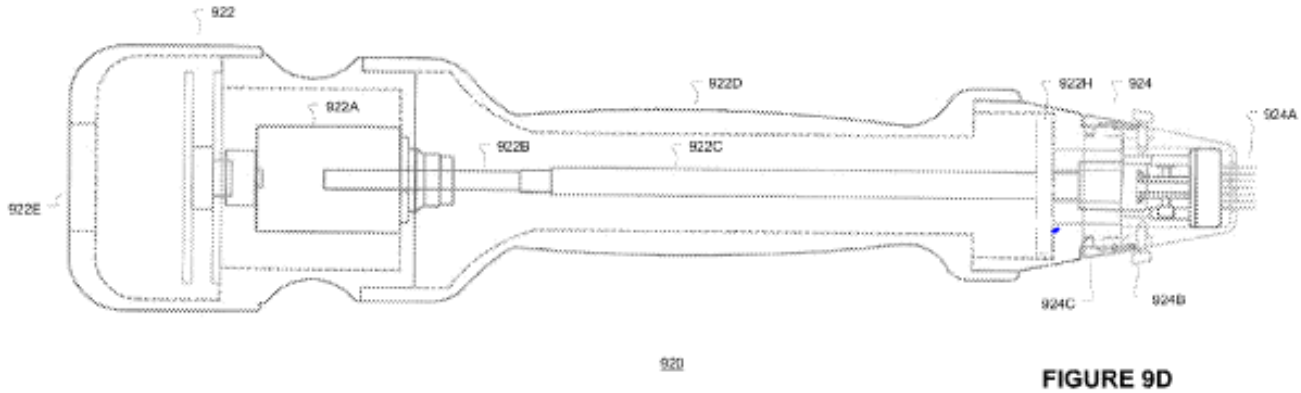

FIGURE 9D

(*Id.* at Fig. 9D.).

Figures 10D and 10E, below, provide a closer view of how the motor moves needle assembly 924F within the needle module 924 from the retracted position (Figure 10D) to "controllably deploy" the needles 924A as shown in Figure 10E. (*Id.* at 12:12-21.).

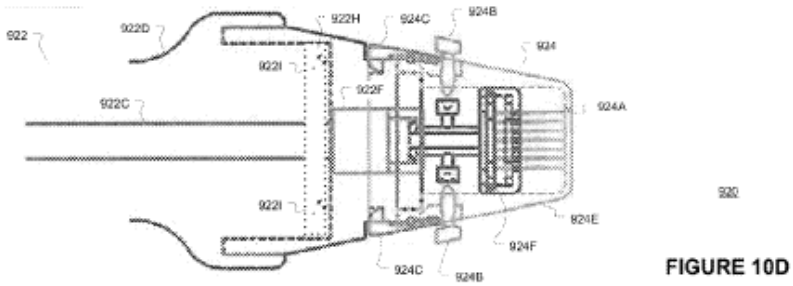

FIGURE 10D

(*Id.* at Fig. 10D.).

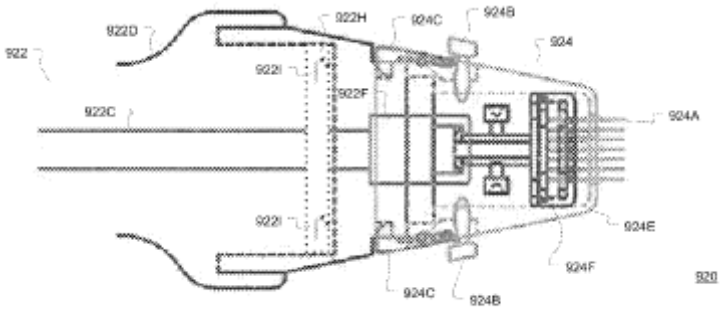

FIGURE 10E

(*Id.* at Fig. 10E.).

Thus, in accordance with the claims' plain language and as described in the specification,

the "deployable needle assembly end surface" from which the needles are extended is the plane defined by the tips of the needles when the needles are not extended. The "deployable needle assembly end surface" is identified below (by the green line) in Figures 9C (excerpted) and 9D (excerpted). As the claims recite, and consistent with the specification, the needles extend from this end surface when the motor is energized ('536 patent) and the needle assembly moves within the needle module ('812 patent) to extend the needles.

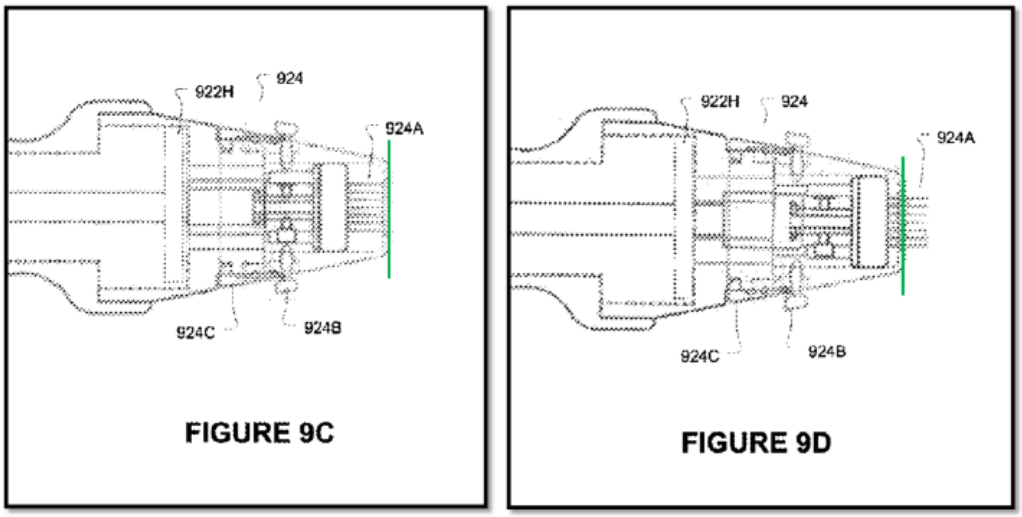

(*Id.* at Figs. 9C, 9D (annotated figures copied from CMBr. at 28).).

In contrast, Respondents' construction, which construes the "deployable needle assembly end surface" as "the end surface of a [user holdable device] deployable needle assembly from which the plurality of needles ***protrude***," conflicts with the claims themselves and improperly excludes disclosed embodiments supporting the claims.

According to Respondents:

> As shown in Figure 11B-11C, "the needle assembly 924F may include a pin cover 924J." [JXM-0001] at 13:2-3. And the "pin cover 924J" represents the outer most surface of the "needle assembly 924F." *Id.* No other "surface" of the needle assembly comes closer to the "dermatological tissue." *Id.* Further, as depicted and as the claims require, the needles all extend "***from*** the . . . end surface" of the needle assembly pin cover. *Id.* at 15:18-24 (emphasis added). The needle tips, moreover, do not start behind and extend ***through*** the pin cover upon actuation;

> the needles protrude ***from*** the pin cover. This leaves only one available "surface" at the end of the needle assembly from which needles extend. Thus, a POSITA would understand "needle assembly end surface" to refer to the outer surface of the pin cover 924J . . . .
>
> Complainant and Staff contend the needle assembly end ***surface*** is a theoretical "plane defined by the tips of the needles." JCCC at 3. As shown in Figure 11B above, no such plane exists.

(RMBr. at 15-16 (emphases in original).).

Respondents provided an annotated Figure 11B showing pin cover 924J, which is copied below.

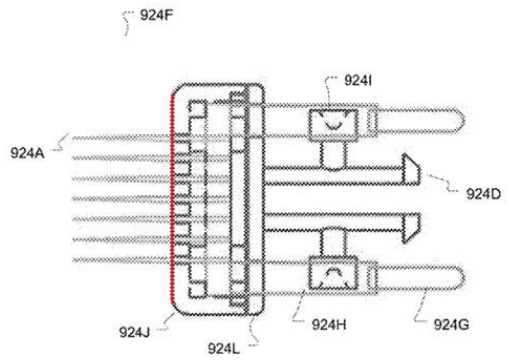

FIGURE 11B

(*Id.* at 16 (citing JXM-0001 at Fig. 11B (annotated)).).

Shown below (by the red line) in the context of Figures 9C (excerpted) and 9D (excerpted) is the surface of the needle assembly of Respondents' proposed construction when the needle assembly is in the retracted position (Figure 9C) and deployed position (Figure 9D).

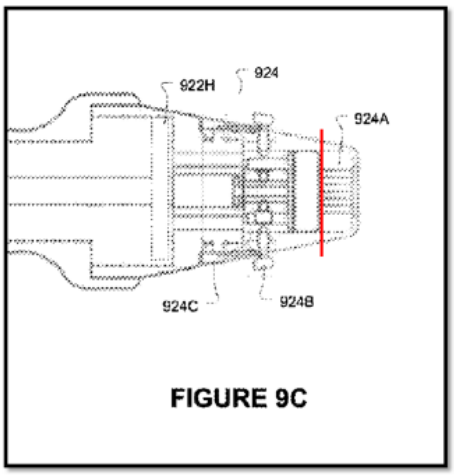

FIGURE 9C

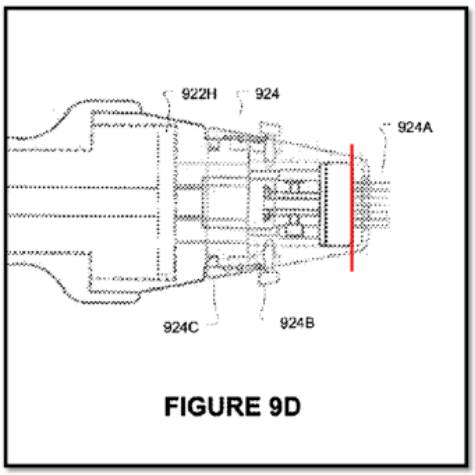

FIGURE 9D

(*Id.* at Figs. 9C, 9D (annotated figures copied from CMBr. at 30).).

As Complainant points out, the surface Respondents have identified "simply moves back and forth, with the needles always protruding from it." (CMBr. at 31.). Respondents' proposed construction defines the surface as one "from which the plurality of needles protrude" but from which the needles are ***not*** "extendable" and ***cannot*** "extend," as the claims require. As Complainant correctly notes, Respondents improperly interpret the "end surface" in isolation, without considering the surrounding claim language. (*Id.* (citing *Wasica Fin. GmbH v. Continental Auto. Sys., Inc.*, 853 F.3d 1272, 1288 (Fed. Cir. 2017) ("the context of the surrounding words of the claim must also be considered in determining the ordinary and customary meaning of terms in a claim"); *IGT v. Bally Gaming Int'l, Inc.*, 659 F.3d 1109, 1117 (Fed. Cir. 2011) ("We caution that claim language must be construed in the context of the claim in which it appears. Extracting a single word from a claim divorced from the surrounding limitations can lead construction astray.").).

Moreover, as Staff notes, such an interpretation would render the claim language "extendable from" meaningless because "Respondents' purported 'end surface' remains a ***fixed*** distance from the needle tips both before and after the extendable needles are extended[.]" (SMBr. at 19 (emphasis added).). *See, e.g.*, *Wasica*, 853 F.3d at 1289 n.10 ("It is highly disfavored to construe terms in a way that renders them void, meaningless, or superfluous.") (citation omitted).

Respondents' proposed construction also improperly excludes disclosed embodiments covered by the claims. *See, e.g.*, *Epos Techs. Ltd. v. Pegasus Techs. Ltd.*, 766 F.3d 1338, 1347 (Fed. Cir. 2014) ("[A] claim construction that excludes a preferred embodiment . . . is rarely, if ever correct and would require highly persuasive evidentiary support."). Figures 9-11 show

embodiments containing a needle assembly with extendable needles. (JXM-0001 at 10:42-13:15, Figs. 9-11.). Respondents' proposed construction would improperly exclude them.

Additionally, as Staff points out, none of the embodiments describe a planar surface at the base of the needles from which the needles are ***extendable***. (SMBr. at 20.). Rather, in the one embodiment where the 924J pin cover is identified as an optional component of the needle assembly, the needles are depicted in a fixed position relative to pin cover—they cannot be extended from the pin cover when the needle assembly is deployed. (JXM-0001 at Fig. 11B.).

Staff also correctly notes that Respondents are improperly reading an optional structure into the claims. (SMBr. at 20.). Respondents have not cited to any requirement or disclaimer in the intrinsic evidence that would support such a narrow construction. The specification unambiguously states that a pin cover component is ***optional***: "As shown in FIGS. 11B and 11C, the needle assembly 924F ***may*** include a pin cover 924J . . . ." (JXM-0001 at 13:1-3 (emphasis added); *cf.* RMBr. at 15 ("No other 'surface' of the needle assembly comes closer to the 'dermatological tissue.'").). Thus, the intrinsic evidence does not support Respondents' narrow proposal that "surface" must refer to a physical planar surface. Importing the optional pin cover structure into the claims would constitute legal error. *Markman v. Westview Instruments, Inc.*, 52 F.3d 967, 979 (Fed. Cir. 1995) (en banc), aff'd, 517 U.S. 370 (1996) (noting that "particular examples or embodiments discussed in the specification are not to be read into the claims as limitations"); *see also Phillips*, 415 F.3d at 1323 ("although the specification often describes very specific embodiments of the invention, we have repeatedly warned against confining the claims to those embodiments").

Respondents also mischaracterize the Parties' agreed upon constructions by attempting to conflate the end surface of the "deployable needle ***module***" with the disputed end surface of the

"deployable needle ***assembly***." Respondents state that because the agreed construction for "a user holdable device releasably couplable deployable needle module end surface" is the "the outer-most surface of the needle module shell, not a hypothetical plane," the term "end surface" must be a physical planar structure. (RMBr. at 18.). However, the agreed upon construction for the end surface of the "deployable needle ***module***" does not state that the end surface of the needle module is the needle module "shell." As shown in the PH JCCC and in Respondents' own brief, the agreed construction is: "plain and ordinary meaning: the end surface of the deployable needle module past which needles can be extended, the module is releasably couplable to a user holdable device proximal end." (PH JCCC at 1-2; RMBr. at 93.).

Furthermore, the intrinsic evidence describes the needle module and needle assembly as different components with different features and functionalities. Accordingly, there is no basis to impose the disclosures of the needle ***module*** on the needle ***assembly***. *See e.g.*, *Comaper Corp. v. Antec, Inc.*, 596 F.3d 1343, 1348 (Fed. Cir. 2010) ("There is an inference . . . that two different terms used in a patent have different meanings.") (citation omitted).

For the foregoing reasons, Complainant and Staff's proposed construction is adopted. The term "a [user holdable device releasably couplable] deployable needle assembly end surface" / "the releasably couplable deployable needle assembly end surface" is construed to mean "the deployable needle assembly end surface is the plane defined by the tips of the needles of the deployable needle assembly when the needles are not extended, the needle assembly can be movable within a needle module that is releasably couplable to the proximal end of a user holdable device."

b) "separatably" ('536 patent, claims 1, 11; '812 patent, claims 1, 12)

Complainant's Proposed Construction	Respondents' Proposed Construction	Staff's Proposed Construction	Adopted Construction
separable (same as Staff's construction)	Indefinite	should be interpreted as "separable"	separable

The Parties dispute whether the term "separatably," which appears in all asserted independent claims of the '536 patent and the '812 patent, should be interpreted as "separable" (Complainant and Staff) or whether that term as written renders the subject claims indefinite (Respondents). As discussed below, under applicable Commission precedent and in view of the intrinsic evidence, Complainant and Staff's proposed construction is adopted. The term "separatably" is interpreted to mean "separable" and is not indefinite.

The Federal Circuit has held that errors in patent claims can be corrected outside the statutory authority of the PTO under 35 U.S.C. §§ 254 and 255 "if (1) the correction is not subject to reasonable debate based on consideration of the claim language and the specification and (2) the prosecution history does not suggest a different interpretation of the claims." *Novo Indus., L.P. v. Micro Molds Corp.*, 350 F.3d 1348, 1354 (Fed. Cir. 2003). In reaching that conclusion, the court distinguished the authority of the PTO, which, among other things, "extends even to broadening corrections." *Id.* at 1356.

Relying on *Novo*, the Commission has held that it has the ability to interpret claim language to correct certain claim drafting errors. *See Certain Multiple Mode Outdoor Grills and Parts Thereof*, Inv. No. 337-TA-895, Comm'n Op. at 24 (Feb. 3, 2015) ("*Multiple Mode Outdoor Grills*"). In that investigation, the Commission analyzed claim terms in independent

and dependent claims to interpret the disputed claim term to correct a drafting error. *Id.* at 23-26 (interpreting a claim reciting "exhaust" as reciting "exhaust means" because the patentee had mistakenly stricken the word "means" when amending the claim); *see also Certain Consumer Elecs. and Display Devices with Graphics Processing and Graphics Processing Units Therein*, Inv. No. 337-TA-932, Order No. 20 at 59-60 (Apr. 2, 2015) (ALJ held that the disputed claim term "is an obvious typographical error that a person of ordinary skill in the art reading [the claim in which the disputed term appeared] in the context of the other claims of the patent would understand," construed the disputed term to correct that error, and rejected Respondents' indefiniteness contention); *Certain Devices for Mobile Data Commc'n*, Inv. No. 337-TA-809, Order No. 46 at 140 (Sept. 28, 2012) (interpreting a disputed claim term to correct a grammatical error because it was "not subject to reasonable debate" and was supported by the prosecution history).

Here, the plain language of the claims demonstrates that there is no reasonable debate that the term "separatably" should be interpreted to mean "separable." In relevant part, claim 1 of the '536 patent recites:

> A method of treating dermatological tissue, comprising: placing a user holdable device releasably couplable deployable needle assembly end surface on or near dermatological tissue to be treated, the holdable device including a proximal end and the releasably couplable deployable needle assembly, ***the deployable needle assembly mechanically separatably from the proximal end*** and including a plurality of needles extendable from the deployable needle assembly end surface . . . .

(JXM-0001 at cl. 1 (emphasis added).).

Claim 11 of the '536 patent, and claims 1 and 12 of the '812 patent, use the term "separatably" in a similar manner. (*See id.* at cl. 11 ("the deployable needle assembly mechanically separatably from the proximal end"); JXM-0005 at cl. 1 ("the releasably couplable deployable needle module mechanically separatably from the user holdable device proximal

end"); and claim 12: ("the releasably couplable deployable needle module mechanically separatably from the user holdable device proximal end"). Based on the plain language of the claims, a person of ordinary skill would understand that the recited structure (needle assembly/module) must be mechanically separable from the proximal end of the user holdable device, i.e., that "separatably" means "separable."[13] *See Phillips*, 415 F.3d at 1314 (noting that "the context in which a term is used in the asserted claim can be highly instructive").

Consistent with Complainant and Staff's proposed construction, the specification describes and depicts the recited mechanically separable functionality. (*See* JXM-0001 at Figs. 10A-B (depicting the needle module 924, and the needle assembly component 924F therein, separated from the end of the user holdable device), Figs. 10C-D (depicting the needle module 924, and the needle assembly component 924F therein, attached to the proximal end of the user holdable device); *see also id.* at Figs. 9C-9D (depicting the needle module 924 connected to the proximal end of the user holdable device).

The specification also describes how the needle module, which includes the needle assembly component, can be mechanically separated and connected from the proximal end of the user holdable device. (*See, e.g.*, *id.* at 11:3-21 (describing how the needle module 924 can be engaged and locked to the end of the user holdable device), 11:35-39 ("FIG. 10A-10D are simplified, partial, cross-sectional diagrams of the ***DNM 924 in various stages of attachment*** to the MLM 922 via the arms 924C and 924D according to various embodiments. As shown in FIG. 10A the ***DNM or DCM 924 is decoupled*** from the MLM 922.") (emphasis added), 11:46-12:40 (describing embodiments and coupling elements for attaching the needle module 924 to

[13] The Parties separately identified and proposed constructions for the "the deployable needle assembly mechanically separatably from the proximal end." (*See* PH JCCC at 4.). The Parties separately identified and agreed upon a construction for the term "a user holdable device releasably couplable deployable needle module end surface." (*See* PH JCCC at 1-2.).

the end of the user holdable device).). Thus, the specification would indicate to one of ordinary skill that the claim term "separatably" is meant to reflect that the needle module/assembly includes functionality such that they can be "attached" or "decoupled," i.e., separable, from the end of the user holdable device.

Additionally, the prosecution history of the '536 and '812 patents support this interpretation of the claims. Respondent Cartessa Aesthetics, LLC, ("Cartessa") in its petitions for *inter partes* review of the '536 and '812 patents, requested that "the Board construe '***mechanically separatably***' to mean 'mechanically ***separable***'" because that is how the term "would be understood by a POSA." (JXM-0013 (IPR2022-00378 Petition for *Inter Partes* Review of '536 Patent) at 18 (citing Ex. 1012 (JXM-0014) at ¶48 (Declaration of Dr. Robert E. Grove) (emphases in original); JXM-0021 (IPR2022-00377 Petition for *Inter Partes* Review of '812 Patent) at 24 (citing Ex. 1012 (JXM-0022) at ¶48 (Declaration of Dr. Robert E. Grove)).).[14] Thus, at least one of the Respondents, and its expert, Dr. Robert E. Grove, agreed that a skilled artisan would understand the term "separatably" as "separable."

However, Respondents argue that the Commission lacks the statutory authority to correct typographical errors, and therefore, the claims as written are indefinite. (*See* RMBr. at 22 (citing *Certain Audio Players and Components Thereof (II)*, Inv. No. 337-TA-1330, Order No. 14 (Feb. 15, 2023) ("*Audio Players II*"); *Certain Bio-Layer Interferometers & Components Thereof*, Inv. No. 337-TA-1344, Order No. 16 (May 31, 2023) ("*Bio-Layer Interferometers*").). Respondents' position is unsupported for the following reasons.

First, Respondents mischaracterize the dispute and misrepresent Complainant and Staff's

[14] In its non-institution decisions, the PTAB did not construe the term "mechanically separatably" because "the threshold issue of institution in this case can be decided regardless of its construction." (JXM-0016 (IPR2022-00378 Decision Denying Institution of *Inter P*artes Review of '536 Patent) at 5; JXM-0024 (IPR2022-00377 Decision Denying Institution of *Inter Partes* Review of '812 Patent) at 5.).

position. (*See* RMBr. at 20 ("Staff and Complainant agree that 'separatably' is an error and therefore request a 'typographical correction to 'separable.'"); *id.* ("Requests for correction of a patent must be submitted to the 'Certificates of Correction Branch[.]'").). Complainant and Staff are not requesting that the Commission correct the claims to swap out the term "separatably" and replace it with the term "separable." Rather, Complainant and Staff propose that, in view of the intrinsic evidence, "separatably" would be understood by one of ordinary skill to mean "separable."

Second, as discussed above, Respondents' contention that the Commission has no authority to interpret "separatably" as "separable" is contrary to Commission precedent. *See Multiple Mode Outdoor Grills*, Inv. No. 337-TA-895, Comm'n Op. at 23-26. (*See also* SMBr. at 27 (noting that *Multiple Mode Outdoor Grills* controls).). Respondents rely on two (2) orders that Respondents claim "confirm[] this point of law." (RMBr. at 22 (citing *Audio Players II* and *Bio-Layer Interferometers*).). However, as Staff points out, neither order is Commission precedent. (SMBr. at 27.). Moreover, both orders cite to the Commission's opinion in *Certain Variable Speed Wind Turbines and Components Thereof*, which addressed whether the Commission has the authority to correct ***inventorship***, and not whether it can construe a claim term as it would be understood by one of ordinary skill in view of the intrinsic evidence. *Audio Players II*, Order No. 14 at 23 (citing *Certain Variable Speed Wind Turbines and Components Thereof*, Inv. No. 337-TA-641, Comm'n Op. at 36 (Mar. 2, 2010) ("*Wind Turbines*"); *Bio-Layer Interferometers*, Order. No. 16 at 21 (citing *Wind Turbines*, Comm'n Op. at 36). Neither order Respondents cited addressed the Commission's opinion in *Multiple Mode Outdoor Grills*.

Based upon the claim language and the intrinsic evidence, there can be no reasonable debate that a person of ordinary skill in the art would understand the claim term "separatably" to

mean "separable." Thus, for these reasons, Complainant and Staff's proposed construction is adopted. The term "separatably" is construed to mean "separable/" It is not indefinite.

c) "the deployable needle assembly mechanically separatably from the proximal end" ('536 patent, claims 1, 11)

Complainant's Proposed Construction	Respondents' Proposed Construction	Staff's Proposed Construction	Adopted Construction
the deployable needle assembly is mechanically separable from the proximal end of the user holdable device (the deployable needle assembly can be within a needle module that mechanically separates from the proximal end of the user holdable device) (same as Staff's construction)	Indefinite due to "separatably." To the extent the term is not held to be indefinite, the term should be construed as follows: the needle assembly has mechanical elements for coupling the needle assembly to and decoupling the needle assembly from the proximal end.	the deployable needle assembly is mechanically separable from the proximal end of the user holdable device (the deployable needle assembly can be within a needle module that mechanically separates from the proximal end of the user holdable device)	the deployable needle assembly is mechanically separable from the proximal end of the user holdable device (the deployable needle assembly can be within a needle module that mechanically separates from the proximal end of the user holdable device)

Respondents raise the same indefiniteness argument for "separatably" that has been discussed above as incorrect. Respondents propose an alternative construction that improperly limits the claims by reading in a direct (rather than indirect) mechanical, ***structural*** connection between the needle assembly and the proximal end of the user holdable device. For the following reasons, in view of the intrinsic evidence, Complainant and Staff's proposed construction is adopted.

Complainant and Staff's construction properly reflects that the "needle assembly" can be mechanically separable from the proximal end because the needle assembly can be part of a needle module that mechanically connects to the proximal end. In relevant part, claim 1 of

the ’536 patent recites:

> A method of treating dermatological tissue, comprising: placing a user holdable device releasably couplable deployable needle assembly end surface on or near dermatological tissue to be treated, the holdable device including a ***proximal end*** and the ***releasably couplable deployable needle assembly***, ***the deployable needle assembly mechanically separatably from the proximal end*** and including a plurality of needles extendable from the deployable needle assembly end surface . . . .

(JXM-0001 at cl. 1 (emphases added).).

The claim recites the structure of a user holdable device including two structural components: (a) a proximal end; and (b) a releasably couplable deployable needle assembly. (*Id.*). The claim then describes functionality for structure (b), which is “mechanically separatably,” i.e., separable, from structure (a). (*Id.*). As Complainant points out, nothing in the claims limits ***how*** the deployable needle assembly is mechanically separable from the proximal end. (CMBr. at 39.). Specifically, nothing in the claims requires that the “deployable needle assembly” itself include “mechanical elements” for coupling and decoupling from the proximal end, as Respondents propose.

Moreover, claims 1 and 11 of the ’536 patent are “comprising” claims and thus are “open-ended and do[] not exclude additional, unrecited elements or method steps.” *CollegeNet, Inc. v. ApplyYourself, Inc.*, 418 F.3d 1225, 1235 (Fed. Cir. 2005) (finding that claims that do “not expressly provide for human intervention” are open to including unrecited human actions); *Crystal Semiconductor Corp. v. TriTech Microelectronics Int’l, Inc.*, 246 F.3d 1336, 1348 (Fed. Cir. 2001) (noting that because the disputed claims use the transitional phrase “comprising,” there is “a presumption that the recited elements are only a part of the device, that the claim does not exclude additional, unrecited elements”) (internal citations omitted). Thus, as Staff notes, there is no explicit requirement in the claims that the needle assembly have mechanical elements for directly coupling and decoupling from the proximal end, as opposed to the unrecited needle

module (of which the assembly is a component) with mechanical coupling/decoupling elements. (SMBr. at 35 n.17.).

The intrinsic evidence also supports Complainant and Staff's proposed construction. The specification describes and depicts that: (i) the deployable needle assembly can be a component of the deployable needle module; and (ii) the deployable needle module can be coupled and decoupled via exemplary mechanical elements to the proximal end of the user holdable device. The specification, for example, describes and depicts how a needle module, which can surround a needle assembly, can be mechanically coupled to the proximal end of the user holdable device. (JXM-0001 at Figs. 10A-D, 11A; *id.* at 11:3-21 (describing exemplary mechanical coupling/decoupling elements).). Additionally, Figure 11A depicts an embodiment where the needle assembly 924F is deployed in a way that "may prevent unintentional decoupling of the DNM [deployable need module] 924.").[15] (*Id.* at 12:53-47.). In view of these disclosures, a skilled artisan would understand that the claim does not require a specific way or structure to mechanically couple and decouple the needle module, let alone the needle assembly.

Respondents nevertheless propose construing the claim to add an additional structural component such that the needle assembly itself be directly connected via mechanical elements to the proximal end of the user holdable device. (*See* RMBr. at 32-35 (contending that the "coupling arms 924D" are depicted and described as a component of the needle assembly).). However, the plain language of the claim does not recite a mechanical structure for coupling/decoupling the needle assembly. Respondents have not cited to a requirement in the intrinsic evidence whereby the needle assembly must itself include a mechanical coupling structure. Therefore, it would be legal error to read into the claims the mechanical coupling

[15] "DNM" is defined as the "deployable needle module." (JXM-0001 at 10:49.).

structure from the figures for the needle assembly. *See i4i Ltd. P'ship v. Microsoft Corp.*, 598 F.3d 831, 843 (Fed. Cir. 2010) ("[A] claim is not limited to the embodiments described in the specification unless the patentee has demonstrated a clear intention to limit the claim's scope with words or expressions of manifest exclusion or restriction . . . In light of the specification's permissive language, the prosecution history, and the claim language, we conclude that independent manipulation is a benefit of separate storage, but not itself a limitation.") (internal citations and quotations omitted); *cf.* RMBr at 32 (citing to structures in figures).

Furthermore, Respondents' proposed construction would preclude connecting and separating a needle assembly from the proximal end by, for example, including the needle assembly in a needle module that connects and separates from the proximal end using the needle module's connecting arms. Respondents seek to read in a requirement that the needle assembly be directly coupled to the proximal end, rather than being indirectly coupled through use of a needle module. However, Respondents did not present any basis for reading a "direct coupling" requirement into the claims.

Moreover, nothing in the intrinsic record imposes a "direct coupling" requirement. There is no clear and unambiguous disclaimer of an indirect connection between the needle assembly and the proximal end. *Omega Eng'g, Inc. v. Raytek Corp.*, 334 F.3d 1314, 1323 (Fed. Cir. 2003) ("We indulge a 'heavy presumption' that claim terms carry their full ordinary and customary meaning, unless the patentee unequivocally imparted a novel meaning to those terms or expressly relinquished claim scope . . . ."). To the extent that Respondents point to particular embodiments in the specification to try to justify reading in a "direct coupling" limitation, that is also inappropriate. *See Phillips*, 415 F.3d at 1323 (the Federal Circuit has "repeatedly warned against confining the claims to [described] embodiments" and "expressly rejected the contention

that if a patent describes only a single embodiment, the claims of the patent must be construed as being limited to that embodiment").

For the reasons discussed above, Complainant and Staff's proposed construction is adopted. The term "the deployable needle assembly mechanically separatably from the proximal end" is construed to mean "the deployable needle assembly is mechanically separable from the proximal end of the user holdable device (the deployable needle assembly can be within a needle module that mechanically separates from the proximal end of the user holdable device)." It is not indefinite.

d) "pulsed radio frequency signals" ('774 patent, claim 11)

Complainant's Proposed Construction	**Respondents' Proposed Construction**	**Staff's Proposed Construction**	**Adopted Construction**
Plain meaning and ordinary meaning: radio frequency signals that are normally off and suddenly on for a period of time (i.e., a rapid, transient change from a baseline to a different amplitude, followed by rapid return to baseline) (same as Staff's construction)	a radio frequency signal that is normally off with an amplitude of zero and is suddenly on with a constant amplitude for a brief portion of time	Plain meaning and ordinary meaning: radio frequency signals that are normally off and suddenly on for a period of time (i.e., a rapid, transient change from a baseline to a different amplitude, followed by rapid return to baseline)	Plain meaning and ordinary meaning: radio frequency signals that are normally off and suddenly on for a period of time (i.e., a rapid, transient change from a baseline to a different amplitude, followed by rapid return to baseline)

The Parties dispute whether the term "pulsed radio frequency signals" should be construed pursuant to its plain and ordinary meaning, or whether it should be construed to specifically require: (i) exactly zero amplitude when no signals are produced; and (ii) a constant amplitude for a brief portion of time when the signals are produced. For the following reasons,

the term "pulsed radio frequency signals" is given its plain and ordinary consistent with Complainant and Staff's proposed construction. Respondents' unsupported proposal improperly reads additional requirements into the claim term.

The '774 patent discloses that in "various embodiments," the "signal waveform . . . includes square-wave pulses," shown in Figures 5A (copied below) and 5B. (JXM-0003 ('774 patent) at 6:12-6:18.). The specification also discloses "pulses" having the shape shown in Figure 6, copied below. (*Id.* at 6:59-61.). Complainant and Staff's construction, "radio frequency signals that are normally off and suddenly on for a period of time (i.e., a rapid, transient change from a baseline to a different amplitude, followed by rapid return to baseline)," appropriately explains the plain meaning of "pulses" and embrace those shown in Figures 5A, 5B, and 6. (*See, e.g.*, CXM-0008.0007 (Excerpt of Modern Dictionary of Electronics (7th ed. 1999)) (definition and graphic showing the plain and ordinary meaning of a "pulse," which tracks Commission and Staff's construction).).

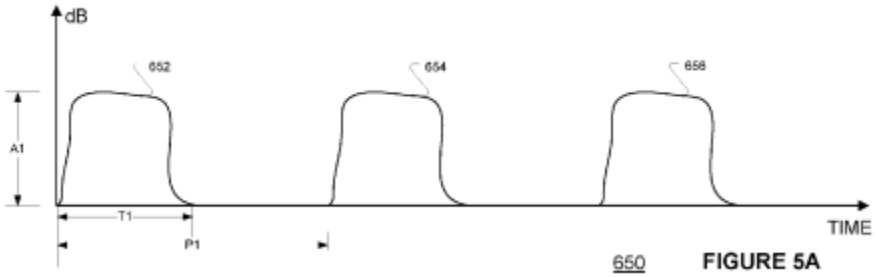

FIGURE 5A

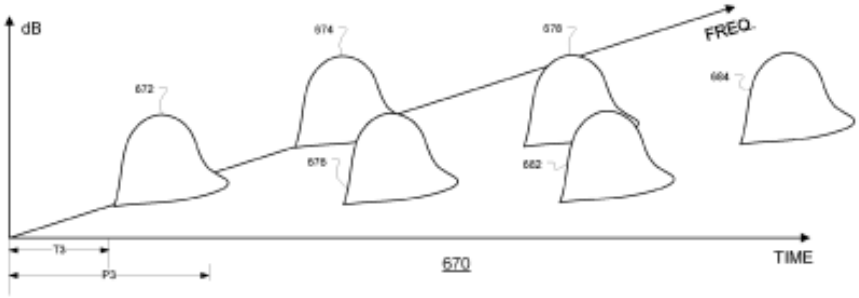

FIGURE 6

(JXM-0003 at Figs. 5A, 6.).

Complainant and Staff's proposed plain and ordinary meaning embraces, but does not limit, the scope of pulsed radio frequency signals to those depicted in Figures 5A-B and 6. This is consistent with the specification's non-limiting disclosure that "a ***variety*** of signals (such as shown in FIGS. 5A to 6)" may be produced by the signal generator. (*Id.* at 3:56-58 (emphasis added).).

In contrast, Respondents improperly seek to read the "square-wave pulses" embodiment of Figures 5A and 5B into the '774 patent claims, and to impose additional requirements through their proposed construction. However, the Federal Circuit has "repeatedly warned against confining the claims to [described] embodiments" and "expressly rejected the contention that if a patent describes only a single embodiment, the claims of the patent must be construed as being limited to that embodiment." *Phillips*, 415 F.3d at 1323.

In arguing for a construction that requires a pulse to have "constant amplitude," Respondents further seek to limit the claims to ideal square-wave pulses. As Figures 5A and 5B depict, even the square-wave pulses in the '774 patent do not have "constant amplitude" (i.e., a horizontal line for the top of the pulses). In addition, Respondents' construction would improperly exclude Figure 6, in which the amplitude of the pulses varies over the entire pulse. *Epos*, 766 F.3d at 1347 ("[A] claim construction that excludes a preferred embodiment . . . is rarely, if ever correct and would require highly persuasive evidentiary support."); *see also Vitronics*, 90 F.3d at 1583.

Furthermore, Respondents seek to read in a requirement that there be an "amplitude of zero" when there is no pulse. However, there is nothing in the '774 patent that would support the zero-amplitude limitation that Respondents seek to read into the claims.

Complainant and the Staff's proposed construction also tracks Complainant's proposed construction in the IPRs: "a radio frequency signal that is normally off and suddenly on for a portion of time." (JXM-0019 (IPR2022-00376 Patent Owner's Preliminary Response ("POPR")) at 22.). Respondents improperly seek to insert additional, more rigid requirements into that proposed construction: "a radio frequency signal that is normally off ***with an amplitude of zero*** and is suddenly on ***with a constant amplitude*** for a brief portion of time." However, Complainant did not propose such a rigid construction, let alone clearly and unmistakably disclaim the plain and ordinary meaning of "pulse." *Aylus Networks, Inc. v. Apple Inc.*, 856 F.3d 1353, 1361 (Fed. Cir. 2017) (While prosecution disclaimer can apply based on statements made in IPR proceedings, "to invoke the doctrine of prosecution disclaimer, any such statements must 'be both clear and unmistakable.'"). To the contrary, Complainant relied on the ordinary meaning of "pulse" from a general-purpose dictionary as a starting point for its proposed construction in the IPRs. (JXM-0019.0022 (IPR2022-00376 POPR) at 22.).

For these reasons, Complainant and Staff's proposed construction is adopted. The term "pulsed radio frequency signals" is given its plain and ordinary meaning, i.e., "radio frequency signals that are normally off and suddenly on for a period of time (i.e., a rapid, transient change from a baseline to a different amplitude, followed by rapid return to baseline)."

B. Na Effect Patents

1. Agreed Upon Claim Terms

Term and Claim(s)	Agreed Construction
Preambles ('836 patent, claims 1, 14; '379 patent, claim 1; '444 patent, claim 1)	Preambles are limiting
"configured to"	Plain and ordinary meaning: adapted to

Term and Claim(s)	Agreed Construction
('836 patent, claims 1, 2, 14; '379 patent, claims 1, 2; '444 patent, claims 1, 2)	
"radio frequency (RF) generation module" ('836 patent, claims 1, 2; '379 patent, claims 1, 2; '444 patent, claims 1, 2)	Plain and ordinary meaning: a device that generates electrical signal(s) having a radio frequency
"nearest electrodes" ('444 patent, claim 1)	Plain and ordinary meaning: the closest neighboring electrodes
"electrodes configured to cause coagulation around each electrode rather than coagulating between the electrodes" ('836 patent, claims 1, 14)	Plain and ordinary meaning: two or more electrodes adapted to cause coagulation around each electrode without such coagulation fully extending from one electrode to another electrode
"apply energy to body segments around each electrode rather than to body segments between the electrodes" ('379 patent, claim 1)	Plain and ordinary meaning: energy application occurs around each electrode without such energy application fully extending from one electrode to another electrode (i.e., the energy application must be configured such that energy application between electrodes does not extend continuously between the electrodes)
"electrodes being bipolar"; "electrodes are bipolar" ('836 patent, claims 1, 14; '379 patent, claim 1; '444 patent, claim 4)	Plain and ordinary meaning, electrodes change or alternate between being positive or negative as the current alternates between them (as opposed to a monopolar configuration where current flows from one or more electrodes that deliver current to one or more ground electrodes)
"an RF signal" ('444 patent, claim 2)	"an RF signal" in claim 2 of the '444 patent refers to the same "RF signal with oscillating current" in claim 1 of the '444 patent

2. Disputed Claim Terms

a) "plurality of electrodes" ('836 patent, claims 1, 2, 5, 9, 11, 12, 13, 14, 17, and 22; '379 patent, 1, 2, 5, 7, 8, and 9; '444 patent, 1, 2, 4, 5, 6, 7, 8, and 9)

Complainant's Proposed Construction	Respondents' Proposed Construction	Staff's Proposed Construction	Adopted Construction
Plain and ordinary meaning, which is two or more electrodes (which can be needles or pins)	Plurality of non-insulated electrodes	two or more electrodes/needles/ pins	Plain and ordinary meaning, which is two or more electrodes (which can be needles or pins)

The Parties dispute whether "electrodes:"(i) should be construed to be interchangeable with the terms "needles" and "pins;" and (ii) whether the patentee disclaimed during prosecution all types of electrodes except for non-insulated electrodes.

Respondents seek to improperly read a limitation into the claims, that would require electrodes to be "non-insulated." Respondents' proposed construction is improper because it: (i) strays from the plain language of the claims; (ii) reads out some dependent claims and renders other meaningless; (iii) excludes disclosed embodiments; and (iv) conflicts with the prosecution history of the Na Effect Patents. For the following reasons, the term "plurality of electrodes" is given its plain and ordinary meaning consistent with Complainant's proposed construction.

The plain language of the claims does not support Respondents' attempt to limit the claims reciting a "plurality of electrodes" to "a plurality of ***non-insulated*** electrodes." The plain language of the independent claims simply requires a "plurality" (i.e., two or more) of "electrodes." (JXM-0007 ('836 patent) at cls. 1, 19; JXM-0009 ('379 patent) at cls. 1, 10; JXM-0011 ('444 patent) at cls. 1, 10.).

Moreover, dependent claims recite that each electrode can be "non-insulated," include "a

section" which is "non-insulated," or be "***insulated*** except at [their] tips." (JXM-0007 at cls. 6, 12-13, 24-26; JXM-0009 at cls. 8-9, 17-18; JXM-0011 at cls. 8-9, 17-18.). These recitations confirm that the term "electrodes" on its own conveys nothing about insulation. The recitation of "non-insulated" electrodes in the dependent claims means that it is presumed that the independent claims are not so limited. *See Phillips*, 415 F.3d at 1315 ("the presence of a dependent claim that adds a particular limitation gives rise to a presumption that the limitation in question is not present in the independent claim."). Respondents' proposal to read a "non-insulated" requirement into the independent claims would directly contradict the dependent claims expressly reciting electrodes "insulated except at [their] tips," thereby rendering those claims inoperative and meaningless. *See id.* at 1314.

Respondents' attempt to limit the claims to "non-insulated electrodes" also explicitly contradicts the specification. The specification expressly discloses that the "invention ***may employ insulating needles*** in an area where it comes in contact with epidermis" but "insulation is not required." (JXM-0007 at 3:42-45 (emphasis added).). Thus, certain embodiments "may use non-insulated needles" while "***[o]ther embodiments may use insulated needles***." (*Id.* at 3:53-56; *see also id.* at 6:66-7:1 ("In an embodiment, energized needles may be completely electrically insulated, uninsulated, and only insulated near its tip."), 7:15-18 (needles "***may be insulated*** while generating a desired energy field about the needle in the dermis.") (emphasis added).). The Na Effect Patents recognize that insulation may be required in some cases, but that insulation is generally unnecessary. (*Id.* at 3:41-42 (the invention does "not require insulated needles except for special cases"); *see also id.* at 7:1-6 ("[n]eedle insulation may not be necessary"), 7:12 ("In an embodiment, the needles may not be insulated.").

Respondents' proposed construction would improperly exclude the insulated needle

embodiments expressly disclosed in the specification and therefore, are not correct. *Vitronics*, 90 F.3d at 1583 (constructions that exclude embodiments are "rarely, if ever, correct"); *see also Epos*, 766 F.3d at 1347 ("[A] claim construction that excludes a preferred embodiment . . . is rarely, if ever correct and would require highly persuasive evidentiary support."). In addition to excluding explicitly disclosed embodiments relating to insulated (or partially insulated) electrodes, Respondents' construction commits "one of the cardinal sins of patent law," by reading a particular embodiment, non-insulated needles, into the claims. *Phillips*, 415 F.3d at 1320.

While the specification notes that using non-insulated needles may provide an "advantage" so "insulation is not required" and may offer greater "effectiveness of treatments" in some cases, that at most constitutes a ***preference*** for non-insulated needles and falls far short of disclaiming the (expressly contemplated) use of insulated needles. (JXM-0007 at 3:37-56.). *See i4i Ltd. P'ship v. Microsoft Corp.*, 598 F.3d 831, 844 (Fed. Cir. 2010) (permissive statements about "advantages" "d[id] not clearly disclaim systems lacking these benefits"); *Epistar Corp. v. Int'l Trade Comm'n*, 666 F.3d 1321, 1335 (Fed. Cir. 2009) (affirming the Commission's finding of no disclaimer, stating, "[e]ven if the patent specification did disparage the use of ITO as a window layer, this criticism does not rise to the level of a disavowal").

Respondents' proposed construction also is not supported by the prosecution history, which similarly lacks any "clear and unmistakable" disclaimer of insulated electrodes. *Avid Techs., Inc. v. Harmonic, Inc.*, 812 F.3d 1040, 1045 (Fed. Cir. 2016). To the contrary, the prosecution history confirms that mere reference to "electrodes" was never understood to specify that they are not insulated. In the PCT application to which the Na Effect Patents claim priority, the applicant specified that needles were "not insulated" in claims when that was intended. See

JXM-0008.0033 (Prosecution History for U.S. Patent No. 9,480,836) (claim 12 reciting "[n]eedles in the dermis area are not insulated").). Moreover, claims were added during prosecution that recite both insulated and non-insulated needles. For example, in a preliminary amendment, the applicant added claims requiring that the "plurality of needles:" (i) be "substantially non-insulated" (claim 40); (ii) include "an insulated section and a non-insulated section" (claim 41); and (iii) have an "insulated section [that] is longer than the non-insulated section along the needle length" (claim 42). (*Id.* at .0046 ("Newly Added" claims 40-42).[16] Versions of these claims are included in the issued patents. Thus, there was no "clear and unmistakable" disavowal of insulated (or partially insulated) electrodes during the prosecution. *Avid*, 812 F.3d at 1045.

Respondents rely on a translation of the Korean priority application PCT/KR2012/ 004695) in support of their argument. (RMBr. at 53 (citing JXM-0008.0023 at [34]) (other citations omitted).). According to Respondents, the translated specification identifies several "required components" of the Na Effect, which include, *inter alia*, "the use of non-insulated needles." (*Id.*). Respondents also contend that Dr. Na's translation of the specification "repeatedly disparages the use of insulation on electrodes, and distinguishes prior devices and methods that do employ insulation on needles." (*Id.*).

As Complainant points out, although the Korean priority application expresses a preference for non-insulated needles, it also states that insulated needles may be required "for special cases." (JXM-0008.0022 at ¶¶ [29], [32]).). Specifically, the Korean priority application

[16] Although the language of the proposed claims was adjusted in a July 7, 2015 amendment responding to the examiner's restriction requiring the applicant to identify which species of invention the applicant intended to claim, the amended language still covered both non-insulated and insulated (or partially insulated) electrodes. (*See, e.g.*, See JXM-0008.0261 (including "Currently Amended" claims 37 through 39 which required electrodes which are "non-insulated," "wherein a section of each electrode . . . is non-insulated," and "wherein each electrode . . . is insulated except at its tip").).

expressly states that insulation "***may be necessary***" in certain treatment cases. (*Id.* (emphasis added)). The application also includes a figure which it explains is "the picture of area where the temperature is raised using ***partially insulated needles*** in epidermis in Na-effect or Na-Plus effect." (*Id.* at JXM-0008.0025 at ¶ [66] (emphasis added) (discussing Figure 9).). Respondents may have identified some arguably conflicting disclosure that "insulated needles prevent Na-effect and Na-Plus effect to take place" and that "needle insulation does not entirely prevent Na Effect and Na-Plus effect to occur." (*Id.* at JXM-0008.0025 at ¶¶ [41], [79]).). However, conflicting disclosure falls far short of establishing "clear and unmistakable" disclaimer of insulated needles. *See Avid*, 812 F.3d at 1045; see also *i4i*, 598 F.3d at 844; *Epistar*, 666 F.3d at 1335.

Complainant and Staff have similar constructions. According to Complainant, Staff proposed its construction in view of disclosure in the specification labeling section 300 of the figures as "pin/needle/electrode." (*See* CMBr. at 51 n.10 (citing JXM-0007 at 5:20); *see also* SMBr. at 47-48.). Complainant states that its "position is that a POSITA would understand that the plain and ordinary meaning of a 'plurality of electrodes' would encompass needles or pins (per the parenthetical in Serendia's proposed construction), but need not be needles or pins." (CMBr. at 51 n.10.). Staff's proposed construction narrows the meaning of the term to a disclosed embodiment, which is improper. *See, e.g.*, *Phillips*, 415 F.3d at 1323. In any event, as Complainant notes, this difference is not material to any infringement or validity issue.

For the foregoing reasons, Complainant's proposed construction is adopted. The term "plurality of electrodes" is given its plain and ordinary meaning, i.e., "two or more electrodes (which can be needles or pins)."

b) "a plurality of electrodes, the electrodes being bipolar" / "a plurality of electrodes . . . the electrodes are bipolar" ('836 patent, claims 1, 14; '379 patent, claims 1; '444 patent, claim 4)

Complainant's Proposed Construction	Respondents' Proposed Construction	Staff's Proposed Construction	Adopted Construction
See Serendia's proposed construction for "plurality of electrodes" and agreed-upon construction for bipolar electrodes terms	See Respondents' construction for "plurality of electrodes" and agreed-upon construction for bipolar electrodes terms and excludes devices having rows of electrodes that are all positive or all negative polarity	See Staff's proposed construction for "plurality of electrodes" term and agreed-upon construction for the bipolar electrodes terms; disclaimer as to Intracel configuration (alternating rows of commonly-polarized electrodes): 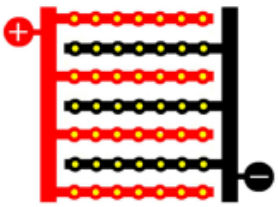	two or more electrodes (which can be needles or pins) that change or alternate between being positive or negative as the current alternates between them (as opposed to a monopolar configuration where current flows from one or more electrodes that deliver current to one or more ground electrodes);[17] excludes the Intracel configuration (alternating rows of commonly-polarized electrodes): 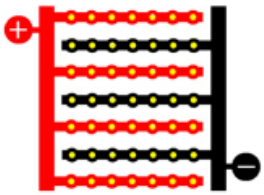

The Parties dispute whether Complainant's arguments made during the IPR of the '836 and '379 patents with respect to the bipolar configuration of alternating rows of commonly-

[17] This portion of the adopted construction includes the adopted construction of "plurality of electrodes," *supra*, and the Parties' agreed upon construction for "electrodes being bipolar" / "electrodes are bipolar," *supra*.

polarized electrodes disclosed in the prior art "Intracel – Fractional RF technology" video ("Intracel"): (i) constitute prosecution disclaimer; and if so, (ii) the scope of that disclaimer, that is whether the disclaimer is limited to, or broader than, Intracel's electrode configuration.

As the Federal Circuit has explained, "[t]he doctrine of prosecution disclaimer is well established in Supreme Court precedent, precluding patentees from recapturing through claim interpretation specific meanings disclaimed during prosecution." *Omega Eng'g*, 334 F.3d at 1323. For prosecution disclaimer to apply, "precedent requires that the alleged disavowing actions or statements made during prosecution be both clear and unmistakable." *Id.* at 1325-26. "Prosecution disclaimer can arise from both claim amendments and arguments made to the PTO." *Tech. Properties Ltd. LLC v. Huawei Techs. Co.*, 849 F.3d 1349, 1357 (Fed. Cir. 2017). The Federal Circuit has held that statements made during an IPR proceeding, either before or after an institution decision, can be relied on to support a finding of prosecution history disclaimer. *Aylus*, 856 F.3d at 1362. "Extending the prosecution disclaimer doctrine to IPR proceedings will ensure that claims are not argued one way in order to maintain their patentability and in a different way against accused infringers." *Id.* at 1360. For the following reasons, Complainant clearly and unmistakably distinguished its bipolar electrode configuration over the Intracel bipolar electrode configuration.

In its IPR petitions of the '836 and '379 patents, Cartessa contended that all claims are unpatentable over the Intracel in view of another prior art reference, US 2010/0023003 ("Mulholland"). (*See* JXM-0025 (IPR2022-00594 Petition for *Inter Partes* Review for the '836 Patent) at 12-16, 57-95; JXM-0029 (IPR2022-00593 Petition for *Inter Partes* Review for the '379 Patent).). The Intracel video includes "audio narration that describes the INTRAcel RF Micro-needling workstation ('INTRAcel device') for treating skin." (JXM-0028 (IPR2022-

00594 Decision Denying Institution of *Inter Partes* Review of the ’836 Patent) at 26).). “The INTRAcel device can operate in bi-polar mode[.]” (*Id.* at 27.). The following “RF circuit diagram” from the video “shows an arrangement of needles used to achieve bipolar mode.” (*Id.* at 28-29.).

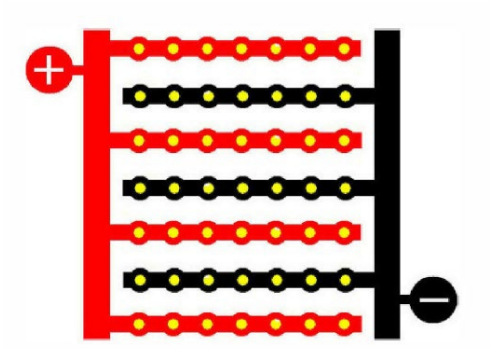

(*Id.*).

In response to the petitions, Complainant argued that the electrode configuration in the prior art Intracel reference is “vastly different” from the claims of those patents. (JXM-0027 (IPR2022-00594 POPR) at 39; JXM-0031 (IPR2022-00593 POPR) at 34.). In presenting this argument with respect to the ’836 patent, Complainant tied this” vastly different” distinction directly to the claim language now sought to be construed.

ii. The Intracel Video Discloses an Electrode Configuration and Applied Energy Vastly Different from the ’836 Patent’s Device

As introduced above, claims 1 and 14 require, in relevant part, “a plurality of electrodes, the electrodes being bipolar.” The ’836 patent describes a bipolar electrode arrangement with respect to the embodiment shown in FIG. 6. There, “a needle configuration 100 may include needles 300 arranged in a rectangular shape

(JXM-0027 (IPR2022-00594 POPR) at 34 (copied from RMBr. at 65) (highlighting added by Respondents); *see also* JXM-0031 (IPR2022-00593 POPR) at 34 (arguing the same for claims 1 and 10 of the ’379 patent).).

As set forth in the subheading in the Patent Owner Preliminary Response above, Complainant's argument centered on the patents' "electrode configuration," which Complainant described with reference to Figure 6 of the patents, and asserted is captured in each of these patents by the claim term "a plurality of electrodes, the electrodes being bipolar." (JXM-0027 (IPR2022-00594 POPR) at 39; JXM-0031 (IPR2022-00593 POPR) at 34.). Complainant avowed that its "Electrode Configuration" is "vastly different" from Intracel's arrangement. (*Id.*) Complainant stated that its "electrode configuration" is shown by Figure 6, reproduced below.

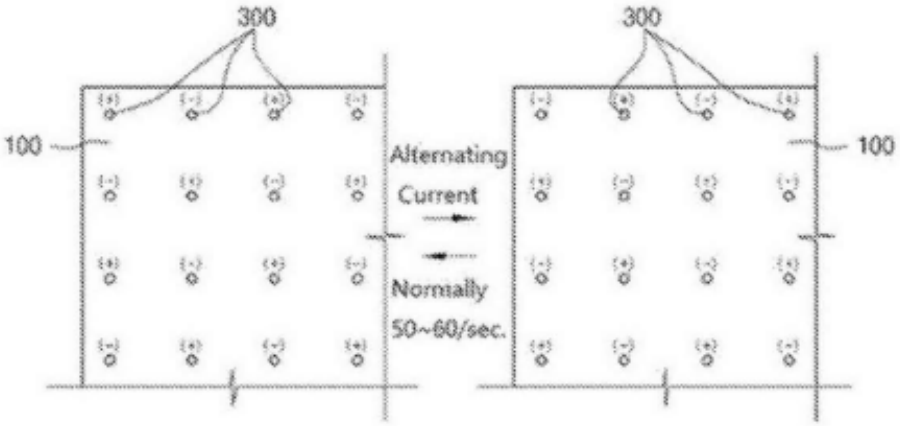

(JXM-0027 (IPR2022-00594 POPR) at 39; JXM-0031 (IPR2022-00593 POPR) at 35.).

Complainant characterized Figure 6 as showing "a needle configuration 100 [that] may include needles 300 arranged in a rectangular shape where needles on each corner are configured to have a polarity opposite its adjacent or neighboring needles . . . . [D]ifferent AC signals having opposite polarities may be applied to needles 300 designated (+) and (-)." (JXM-0027 (IPR2022-00594 POPR) at 39 (citing JXM-0007 at 7:27-32); JXM-0031 (IPR2022-00593 POPR) at 34 (citing JXM-0009 at 7:29-34).

To distinguish the claim language "a plurality of electrodes, the electrodes being bipolar" recited in the claims of the '836 patent from the Intracel electrode configuration, Complainant argued that in the '836 patent, "a cross-section along ***any row or column of electrodes*** captures

alternating polarities." (JXM-0027 (IPR2022-00594 POPR) at 39 (emphases added); *see also* JXM-0031 (IPR2022-00593 POPR) at 35 (arguing the same for claims 1 and 10 of the '379 patent).). Complainant contended that the Intracel arrangement, "[i]n contrast, . . . discloses ***alternating rows of commonly polarized electrodes***[,]" as shown below. (JXM-0027 (IPR2022-00594 POPR) at 40 (emphasis added); *see also* JXM-0031 (IPR2022-00593 POPR) at 35-36 (arguing the same for claims 1 and 10 of the '379 patent).).

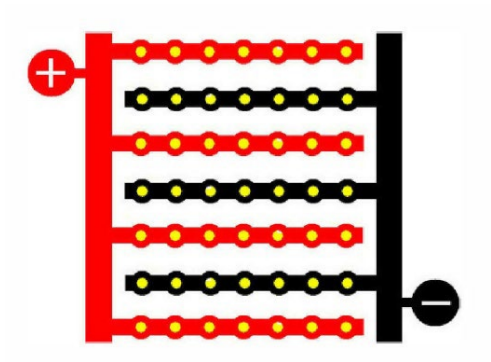

(JXM-0027 (IPR2022-00594 POPR) at 40; *see also* JXM-0031 (IPR2022-00593 POPR) at 35-36.).

To make this distinction clearer, Complainant added that "[u]nlike Figure 6 of the ['836 and '379 patents], a cross-section taken along a ***row*** of electrodes in this image ***only captures electrodes of identical polarity***, i.e., ***all positive electrodes or all negative electrodes***. Moreover, a cross-section taken along a diagonal (45° to horizontal) could capture electrodes of different polarities, although they would not be the closest adjacent electrodes." (JXM-0027 (IPR2022-00594 POPR) at 40 (first emphasis in original) (additional emphases added); *see also* JXM-0031 (IPR2022-00593 POPR) at 36 (arguing the same for claims 1 and 10 of the '379 patent).).

For these reasons, Complainant's statements clearly and unmistakably disclaimed the "vastly different" Intracel embodiment from the claims of the '836 and '379 patents.

In an effort to avoid its disclaimer, Complainant argues that its IPR arguments about the Intracel configuration were directed to other limitations, specifically, "caus[ing] coagulation

around each electrode rather than coagulating between the electrodes" in the '836 patent and "apply[ing] energy to body segments around each electrode rather than to body segments between the electrodes" in the '379 patent (together, the "coagulation" limitations). (*See* CMBr. at 58-64.). However, as Staff notes, Complainant's arguments with respect to the coagulation limitations were made in addition to it arguments concerning the claimed requirement of "a plurality of electrodes, the electrodes being bipolar." (SMBr. at 61.). As Staff explains, Complainant's arguments concerning the coagulation limitations were made ***after*** its arguments for the regarding bipolar electrode configurations and under a ***separate*** section heading. (*Id.*; *compare* JXM-0027 (IPR2022-00594 POPR) at 39 *with id.* at 42.).

Moreover, that Complainant distinguished on other grounds is irrelevant. "An applicant's argument that a prior art reference is distinguishable on a particular ground can serve as a disclaimer of claim scope even if the applicant distinguishes the reference on other grounds as well." *SpeedTrack, Inc. v. Amazon.com*, 998 F.3d 1373, 1380 (Fed. Cir. 2021) (internal citations and quotations omitted). It is similarly inapposite that the PTAB did not base its non-institution decisions on Complainant's arguments with respect to the "vastly different" Intracel bipolar configuration. (*See* CMBr. at 58.). The disclaimer need not be necessary to overcome prior art or an examiner's rejection. *See Tech. Properties*, 849 F.3d at 1358-59 ("The patentee's disclaimer may not have been necessary, but its statements made to overcome Magar were clear and unmistakable . . . . The question is what a person of ordinary skill would understand the patentee to have disclaimed during prosecution, not what a person of ordinary skill would think the patentee needed to disclaim during prosecution.").

Both Staff's and Respondents' proposed constructions embody critical distinctions between the Intracel arrangement and the claims of the '836 and '379 patents that Complainant

explicitly pointed out in the POPRs. Staff's and Respondents' constructions require that the claim term excludes "alternating rows of commonly-polarized electrodes" and "rows of electrodes that are all positive or all negative polarity," respectively. These capture Complainant's disclaimer with respect to the configuration disclosed in the '836 and '379 patents that "a cross-section along ***any*** row or column of electrodes captures ***alternating*** polarities," and Complainant's statements regarding Intracel's rows "having ***identical*** polarity" and diagonals having "different polarities" (despite not being the "closest adjacent electrodes"). (JXM-0027 (IPR2022-00594 POPR) at 39 (first emphasis in original) (additional emphases added); *see also* JXM-0031 (IPR2022-00593 POPR) at 35.).

However, Respondents' proposed construction includes a disclaimer that is not limited to the Intracel bipolar electrode configuration. (*See* RMBr. at 69-70.). The doctrine of prosecution disclaimer "narrows the ordinary meaning of the claim congruent with the scope of the surrender." *Omega Eng'g*, 334 F.3d at 1324. Here, "the only disavowal of claim scope that is clear and unmistakable" is Complainant's disclaimer of an electrode configuration comprised of alternating rows of commonly-polarized electrodes, which is illustrated in the Intracel RF circuit diagram depicted above.[18] *Genuine Enabling Tech. LLC v. Nintendo Co.*, 29 F.4th 1365, 1374 (Fed. Cir. 2022) (reversing the district court's overbroad construction resulting from prosecution disclaimer). As Staff points out, Complainant's arguments made during the IPRs say nothing about bipolar electrode configurations, where, for example, only two (as opposed to all) of the rows of electrodes are "all positive or all negative polarity." (SMBr. at 62.). Thus, Respondents'

[18] Respondents incorrectly represent that the Staff's construction is limited to the "specifically depicted 7 x 7 square array of electrodes" depicted in the Intracel diagram. (*See* RMBr. at 69.). As Staff notes, its proposed construction on its face is not limited to a 7 x 7 square electrode array. (SMBr. at 62 n.30.). "Rather, the Staff's proposed construction reflects Serendia's disclaimer of a bipolar configuration of alternating rows of commonly-polarized electrodes." (*Id.*).

proposed construction, which is not congruent with the scope of Complainant's surrender, is rejected. *Omega Eng'g*, 334 F.3d at 1324.

The Federal Circuit has cautioned against, and reversed, claim constructions that capture an overbroad scope of disclaimer. This is because the disclaimer must be "clear and unmistakable." To the extent that the subject "statements may implicate other claim scope," such "implication" does not rise to the level of "clear and unmistakable" disclaimer. *Genuine Enabling Tech.*, 29 F.4th at 1374. For example, in *Genuine Enabling Technology*, the Federal Circuit held that the district court erred by broadening the scope of disclaimer to signals of frequency up to 500 Hz, instead of limiting the disclaimer to the specific distinction made in the intrinsic evidence, which were signals below the audio frequency spectrum. *See id.* at 1374-75. Here, Respondents similarly seek to improperly broaden the scope of disclaimer to capture bipolar electrode configurations that were not distinguished in the IPRs. In contrast, Staff's proposed construction is congruent with the scope of surrender because it is a verbatim recitation of how Complainant described to the PTAB the "vastly different" Intracel bipolar electrode configuration.

For the foregoing reasons, the term "a plurality of electrodes, the electrodes being bipolar" / "a plurality of electrodes . . . the electrodes are bipolar" is construed to mean "two or more electrodes (which can be needles or pins) that change or alternate between being positive or negative as the current alternates between them (as opposed to a monopolar configuration where current flows from one or more electrodes that deliver current to one or more ground electrodes); excludes the Intracel configuration (alternating rows of commonly-polarized electrodes)," which includes the diagram of the Intracel configuration, reproduced below.[19]

[19] *See* n.17, *supra*.

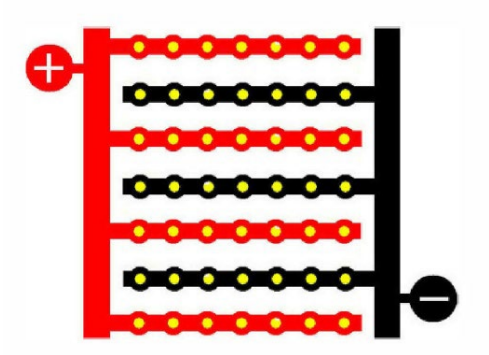

c) "[a/an] Alternating Current (AC) [RF/Radio Frequency (RF)] signal"; "an RF signal with oscillating current" ('836 patent, claims 1, 2, 14; '379 patent, claims 1, 2; '444 patent, claim 1)

Complainant's Proposed Construction	Respondents' Proposed Construction	Staff's Proposed Construction	Adopted Construction
Plain and ordinary meaning: an electrical signal with oscillating current (current alternating polarities), and having a radio frequency (measured in MHz) (same as Staff's construction)	A signal combining an AC frequency rate and an RF frequency rate	Plain and ordinary meaning: an electrical signal with oscillating current (current alternating polarities), and having a radio frequency (measured in MHz)	Plain and ordinary meaning: an electrical signal with oscillating current (current alternating polarities), and having a radio frequency (measured in MHz)

The Parties dispute whether the terms "[a/an] Alternating Current (AC) [RF/Radio Frequency (RF)] signal" and "an RF signal with oscillating current" would be understood to have a plain and ordinary meaning pertaining to parameters of the recited electric signal (Complainant and Staff), or whether it should be construed to require combining two (2) signals, each with different frequency rates (Respondents). For the following reasons, the terms are construed pursuant to their plain and ordinary meaning, where an electrical signal with oscillating current (i.e., understood as alternating current) oscillates at a frequency (measured in MHz) that falls

within the range commonly understood as "radio frequency," as proposed by Complainant and Staff.

First, the claims' plain language recites a "radiofrequency" ("RF") signal of "alternating current," "AC," or "oscillating current." Claim 1 of the '836 patent recites:

> 1. A skin treatment apparatus, comprising:
>
> a plurality of electrodes, the electrodes being bipolar and configured to be insertable into skin to be treated; and
>
> a radio frequency (RF) generation module, the **RF generation module** electrically coupled to the plurality of electrodes and **configured to provide** an ***Alternating Current (AC) RF signal*** to the plurality of electrodes configured to cause coagulation around each electrode rather than coagulating between the electrodes.

(JXM-0007 ('836 patent) at cl. 1 (emphasis added).).[20]

The '379 and '444 patents recite an RF signal with ***oscillating*** current in place of an ***AC*** RF signal. For example, claim 1 of the '379 patent recites:

> 1. A mammalian body treatment apparatus, comprising:
>
> a plurality of electrodes, the electrodes being bipolar and configured to be insertable into a body segment to be treated; and
>
> a radio frequency (RF) generation module, the **RF generation module** electrically coupled to the plurality of electrodes and **configured to provide** an ***RF signal with oscillating current*** to the plurality of electrodes to apply energy to body segments around each electrode rather than to body segments between the electrodes.

(JXM-0009 ('379 patent) at cl. 1 (emphasis added).[21]

As Staff notes, by grouping the two disputed terms, i.e., AC and oscillating current, together and proposing a single construction for those terms, the Parties agree that alternating

---

[20] Claim 1 of the '536 patent is an apparatus claim, and claim 14 is the method counterpart to claim 1's apparatus. Claim 2 is dependent from claim 1 and does not provide any further limitation to the disputed claim term.

[21] Claim 1 of the '379 patent is an apparatus claim, and claim 2 is dependent from claim 1 and does not provide any further limitation to the disputed claim term. Claim 1 of the '444 patent is an apparatus claim.

current has the same scope as oscillating current. (SMBr. at 64.).

The Parties agreed to the following two (2) constructions embedded in the relevant portion of the disputed claims' second limitation.

Term and Claim(s)	Agreed Construction
"configured to" ('836 patent, claims 1, 2, 14; '379 patent, claims 1, 2; '444 patent, claims 1, 2)	Plain and ordinary meaning: adapted to
"radio frequency (RF) generation module" ('836 patent, claims 1, 2; '379 patent, claims 1, 2; '444 patent, claims 1, 2)	Plain and ordinary meaning: a device that generates electrical signal(s) having a radio frequency

(PH JCCC at 2.).

In view of the agreed upon constructions, the second limitation describes in relevant part a radio frequency ("RF") generation module (i.e., a device that generates electrical signal(s) having a radio frequency) configured to (i.e., adapted to) provide an [alternating/oscillating] current RF signal. (*Id.*).

Based on the plain language of the claims, there is no requirement that the signal ***combine*** an AC signal with a particular frequency rate, and an RF signal with a different frequency rate, as proposed by Respondents. Rather, the plain language of the claims recites ***characteristics*** of the signal provided by the RF generation module provide—that the signal provided by the ***radio frequency*** generation module is: (1) is at a radio frequency; and (2) with current that oscillates/alternates polarities—i.e., the frequency of the alternating current (AC) can be at radio frequency (RF). These characteristics of electrical signals are well-known in the art.

(*See* CMBr. at 68 (collecting evidence).).[22] Accordingly, Complainant and Staff's proposed plain and ordinary meaning is consistent with the plain language of the claims.

The specification of the Na Effect Patents also supports Complainant and Staff's proposed plain and ordinary meaning. The specification describes that "RF generator may generate signal or signals" having a variety of parameters, including "a desired voltage, ***current***, energy, resistance, ***RF frequency***, on cycle, off cycle, and other ***parameters*** according to various embodiments." (JXM-0007 at 5:54-57 (emphases added).). Similarly, the specification describes that "[a] user input device 16 may enable a user to set several ***parameters*** that control the energy field 909 . . . including the voltage, ***current***, and ***frequency*** applied to the needles 300..." (*Id.* at 5:35-38 (emphases added).

With respect to the alternating current parameter of the signals, the specification explains that AC "changes magnitude and direction periodically," and "differ(s) from direct current (DC), which flows in one direction and has constant polarity." (*Id.* at 6:1-6.). The specification also explains that "[o]n-grid AC provided by power companies commonly alternates polarity about

[22] As Complainant notes, the ordinary meanings of "alternating current" and "radiofrequency" are well-understood in the art. (CMBr. at 68 (citing CXM-0009.0003 (Excerpt of McGraw-Hill Dictionary of Science and Technical Terms (6th ed. 2003)) (defining "alternating current" as "electric current that reverses direction periodically, usually many times per second."); *id.* at CXM-0009.0006 (defining "radio frequency" as "[a] frequency at which coherent electromagnetic radiation of energy is useful for communication purposes; roughly the range from 10 kilohertz to 100 gigahertz."); CXM-0011.0003 (Excerpt of the Penguin Dictionary of Science (2009)) ("alternating current" defined as "current in an electric circuit that changes direction periodically"); *id.* at CXM-0011.0004 ("radio frequency" defined as "the range of frequencies of electromagnetic radiation below 300 Ghz"); CXM-0008.0005 (Excerpt of Modern Dictionary of Electronics (7th ed. 1999)) (explaining "alternating current" "usually means that the current changes polarity with time"); *id.* at CXM-0008.0008 (explaining that "radio frequency" "is usually considered to denote frequency above 150 kHz and extending up to the infrared range"); *see id.* at CXM-0008.0009 (defining "RF current" as "[a]lternating current having a frequency higher than 10,000 hertz"); CXM-0012.0003 (Excerpt of IEEE 100, the Authoritative Dictionary of IEEE Standards Terms (7th ed. 2000)) (defining "alternating current" as "[a]n electrical that reverses direction at regular recurring interval of time"); *id.* at CXM-0012.0005 (defining "radio frequency" as "[t]he frequency in the portion of the electromagnetic spectrum that is between the audio-frequency portion and the infrared portion . . . .").).

either at 50 Hz or 60 Hz worldwide." (*Id.* at 6:6-10.). Further, "[i]n an embodiment . . .the neighboring needles may be configured to have opposite polarities when signals are applied by the RF signal generator 14 (FIG. 1)." (*Id.* at 7:45-48.). These disclosures support Complainant and Staff's proposed construction that the provided signals are "with oscillating current (current alternating polarities)."

With respect to the radio frequency characteristic of the signals, the specification identifies multiple embodiments of AC signals in the radio frequency range, measured in MHz. The specification describes that "the AC source may have a frequency above 0.5 MHz and about 2 MHz," and "[o]ther embodiments may employ an AC signal having a frequency from 0.5 to 10 MHz, 1 to 4 MHz, and 1.5-2.5 MHz." (*Id.* at 6:22-28.). Based on "electricity conductivity tests electricity conductivity tests for dry skin and wet skin," the specification explains that "***RF energy flow*** or conductance may be smoother or less resistive when applied to wet skin at 2 MHz." (*Id.* at 6:29-36 (emphasis added).). Thus, the specification discloses that the frequency of the signal provided with oscillating current by the ***radio frequency*** signal generator is within a range of the radio frequency spectrum.

The dependent claims of the '836 and '379 patents also support Complainant and Staff's proposed construction. For example, claim 8 of the '836 patent recites in relevant part: "The skin treatment apparatus of claim 1, wherein the ***RF is about 2.0 MHz*** . . . ." (*Id.* at cl. 8 (emphasis added).). Claim 22 of the '836 patent recites in relevant part: "The method of treating skin of claim 14, wherein the ***RF is from 0.5 to 10 Mhz*** . . . . (*Id.* at cl. 22 (emphasis added). These claimed radio frequency ranges, measured in MHz, are consistent with the MHz ranges described in the specification.[23]

[23] *See also* JXM-0009 ('379 Patent) at cl. 6 ("The mammalian body treatment apparatus of claim 1, wherein the ***RF is about 2.0 MHz*** . . . .") (emphasis added), cl. 15 ("The method of treating a mammalian

Respondents contend that the plain and ordinary meaning does not apply, and that the disputed claims require combining the frequency rate of an AC signal with the frequency rate of a separate RF signal. For instance, Respondents cite to the following passage: "An embodiment of the present invention may employ bipolar needles, alternating current (AC) signals, ***and*** high frequency signals." (RMBr at 76 (citing JXM-0007 at 5:58-59) (emphasis added by Respondents).). However, this broad disclosure does not preclude a single signal with oscillating current at a radio frequency from being within the scope of the claim.

With respect to the prosecution history, Respondents contend that all embodiments except those requiring a signal combining the frequency rate of an AC signal with a frequency rate of a separate RF signal, were disclaimed. (*See* RMBr. at 71-75.). Specifically, Respondents point to claim amendments and arguments made in distinguishing the Manstein reference (US 2005/0222565) ("Manstein") during prosecution of the '836 patent. For the following reasons, the portions of the file histories upon which Respondents rely do not a constitute clear and unmistakable narrowing of the disputed terms.

During prosecution, pending claims 17 and 43 (which ultimately issued as independent claims 1 and 12) were amended in several times. The applicant first amended these claims to add the requirement that a high frequency ***Alternating Current (AC)*** signal as the type of signal provided by the signal generation module:

---

body of claim 10, wherein the ***RF is about 2.0 MHz*** . . . .") (emphasis added).

17. (Currently Amended) A skin treatment apparatus that enables non-intersecting coagulation of skin dermis about electrodes, comprising:

~~a set~~ at least three ~~of bipolar~~ electrodes configured to be insertable into skin to be treated; and

a signal generation module, the signal generation module electrically coupled to the at least three ~~set of bipolar~~ electrodes and providing a high frequency Alternating Current (AC) ~~signals~~ signal for a predetermined time interval to the at least three ~~set of bipolar~~ electrodes to form bipolar pairs between electrodes of the at least three electrodes ~~to that enable non-intersecting coagulation about each electrode of the bipolar set~~.

(JXM-0008.0310 ('836 patent prosecution history) (Oct. 18, 2015 Response to Office Action) (copied from SMBr. at 68).).

The applicant argued that "the Manstein reference does not teach applying a high frequency Alternating Current signal to bipolar electrodes." (*Id.* at JXM-0008.0317.). The applicant later amended the claims to add, *inter alia*, the requirements that: (i) the signal generation module was specifically a ***radio frequency (RF)*** generation module; and (ii) the signal provided by the RF generation module, in addition to being of Alternating Current, is not just a "high frequency" signal, but specifically an ***RF*** signal:

17. (Currently Amended) A skin treatment apparatus ~~that enables non-intersecting coagulation of skin dermis about electrodes~~, comprising:

~~at least three~~ a plurality of electrodes, the electrodes being bipolar and configured to be insertable into skin to be treated; and

a ~~signal~~ radio frequency (RF) generation module, the ~~signal~~ RF generation module electrically coupled to the ~~at least three~~ plurality of electrodes and configured to ~~providing~~ provide ~~a high frequency~~ an Alternating Current (AC) RF signal ~~for a predetermined time interval to the at least three~~to the plurality of electrodes to ~~form bipolar pairs between electrodes of the at least three electrodes~~coagulate around each electrode rather than coagulating between the electrodes.

(*Id.* at JXM-0008.0371 (May 5, 2016 Response to Office Action) (copied from SMBr. at 69).).

With respect to these amendments, the applicant argued that Manstein only disclosed an RF signal and an AC signal as ***separate embodiments***. (*Id.* at JXM-0377 ("Manstein, critically however, teaches providing a RF signal in one embodiment ***OR*** an AC or DC signal in another embodiment.").). The applicant further argued that "Manstein clearly does ***not*** teach or suggest providing ***a high frequency AC signal*** to bipolar electrodes," and that it was "clear error" to reject this aspect of the claims based on Manstein.[24] (*Id.* at JXM-0008.0378 (emphases added).).

The Examiner agreed, explaining in the Notice of Allowance that Manstein failed to teach the claimed "RF AC signal":

> The examiner agrees that with the applicant's argument that the AC signal and RF signal are applied in different embodiments in the prior art (e.g. see [0032] of Manstein) and that there would be no motivation to combine the embodiments. [0052] of the applicant's specification is where the applicant discloses the RF AC signal being implemented in one embodiment.

(*Id.* at JXM-0008.391 (May 18, 2016 Notice of Allowance).).

The foregoing excerpts from the prosecution history reflect that the claims were ***not*** distinguished on the basis of combining an AC signal with its own frequency rate with a separate RF signal with a different frequency (RF) rate. Frequency rates were not mentioned at all. Instead, the prosecution history indicates that the claims were narrowed from a "signal generator" providing a "high frequency signal," to a particular kind of signal generator—a ***radio frequency*** signal generator, providing a ***radio frequency*** signal, and that the RF signal provided be of alternating current. In other words, the claims were distinguished because Manstein did not have an embodiment with an AC signal having a radio frequency. This is consistent with Complainant and the Staff's proposed construction. Thus, Respondents' disclaimer argument is

[24] As shown above, "high frequency" was amended to "radio frequency." (JXM-0008.0371.).

rejected. *See, e.g.*, *Golight, Inc. v. Wal- Mart Stores, Inc*., 355 F.3d 1327, 1332 (Fed. Cir. 2004) (finding no disclaimer because "the statements in the prosecution history are subject to multiple reasonable interpretations, they do not constitute a clear and unmistakable departure from the ordinary meaning of the term.").

For these reasons, Complainant and Staff's proposed construction is adopted. The terms "[a/an] Alternating Current (AC) [RF/Radio Frequency (RF)] signal" / "an RF signal with oscillating current" are given its plain and ordinary meaning, i.e., "an electrical signal with oscillating current (current alternating polarities), and having a radio frequency (measured in MHz)."

d) ". . . [causes/to cause] energy to be substantially applied to body segments around each electrode" ('444 patent, claim 1)

Complainant's Proposed Construction	**Respondents' Proposed Construction**	**Staff's Proposed Construction**	**Adopted Construction**
Plain and ordinary meaning, [causes/to cause] energy to be substantially applied to body segments around each electrode (as opposed to, e.g., between the electrodes)	"substantially applied" renders the claims indefinite	Indefinite (re "energy to be substantially applied")	Indefinite

The Parties dispute whether the language "energy to be ***substantially*** applied to body segments around each electrode" renders claim 1 of the '444 patent indefinite. Staff and Respondents contend that this claim term "substantially" is a term of degree, which Complainant does not dispute. (*See* CMBr. at 74-75.). Claim 1 is indefinite because the intrinsic evidence does not provide objective boundaries for those of skill in the art as to the scope of energy to be "substantially" applied to body segments around each electrode.

"[A] patent is invalid for indefiniteness if its claims, read in light of the specification delineating the patent, and the prosecution history, fail to inform, with reasonable certainty, those skilled in the art about the scope of the invention." *Nautilus, Inc. v. Biosig Instruments, Inc.*, 572 U.S. 898, 901 (2014). "[A] patent must be precise enough to afford clear notice of what is claimed, thereby appris[ing] the public of what is still open to them." *Id.* at 909.

The Federal Circuit has long recognized that the claim term "substantially" is a term of degree. *See generally, Interval Licensing LLC v. AOL, Inc.*, 766 F.3d 1364, 1370 (Fed. Cir. 2014) (collecting cases). Terms of degree "necessarily call[] for a comparison against some baseline." *See Liberty Ammunition, Inc. v. United States*, 835 F.3d 1388, 1395-96 (Fed. Cir. 2016). "Terms of degree are problematic if their baseline is unclear to those of ordinary skill in the art." *Id.* While "post-Nautilus cases indicate that terms of degree are not 'inherently indefinite' in light of the Supreme Court's decision, we have recognized that claims having terms of degree will fail for indefiniteness unless they 'provide objective boundaries for those of skill in the art' when read in light of the specification and the prosecution history." *Id.* at 1395-96 (citing *Interval Licensing LLC*, 766 F.3d at 1370-71); *see also Niazi Licensing Corp.*, 30 F.4th 1339, 1348 ("[T]erms of degree render a claim indefinite where the intrinsic evidence (or extrinsic evidence, where relevant and available) provides insufficient guidance as to any objective boundaries for the claims."). "Ultimately, patent claims with descriptive words or terms of degree 'must provide objective boundaries for those of skill in the art' in the context of the invention to be definite." *Niazi*, 30 F.4th at 1349 (internal citations omitted).

Complainant's proposed construction, that this term receive its plain and ordinary meaning, does not define the metes and bounds of "substantially applied" or otherwise provide any explanation of what is meant by substantial application of energy to body segments around

each electrode. Rather, Complainant's construction copies the language from the claim and adds the parenthetical "(as opposed to, e.g., between the electrodes)," which does not appear in the claim language. This parenthetical about what is not done between the electrodes provides no information about the substantial application of energy to body segments around each electrode.

Moreover, the term "substantially applied" does not appear in the specification of the '444 patent. The specification does not provide any standard for determining how much energy is required for substantially applying energy. Rather, the specification only describes two energy field formations: (i) embodiments with overlapping or intersecting energy fields, such as Figure 9A; and (ii) embodiments with non-overlapping or non-intersecting energy fields, such as Figure 9B. These Figures are shown below.

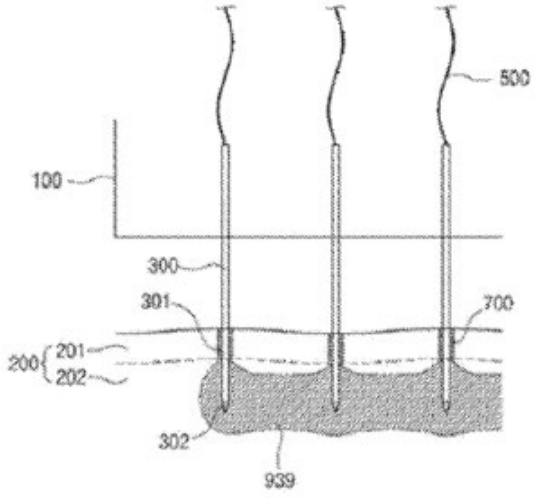

FIGURE 9A

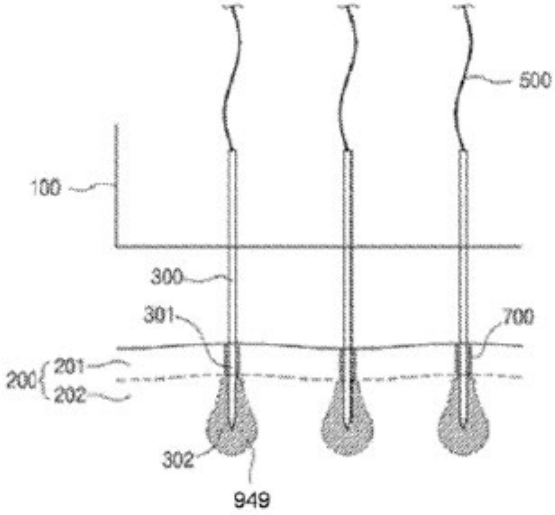

FIGURE 9B

(JXM-0011.0009.).

Complainant agreed that the specification only describes the two energy field formations discussed above. In its response to Cartessa's request for *inter partes* review of the '379 patent, one of the parent patents of the '444 patent, Complainant argued that Figures 2, 5, and 9B,

"illustrat[e] energy fields focused around each needle, ***without*** connection or intersection between the electrodes," while Figures 4, 7 and 8 are the embodiments ***with*** connected energy fields. (JXM-0031 (IPR2022-00593 POPR) at 14-18 (emphasis added).). Figures 5 (embodiment depicting energy applied around each electrode without connection) and 7 (embodiment depicting energy application between electrodes with connected energy fields) are reproduced below.

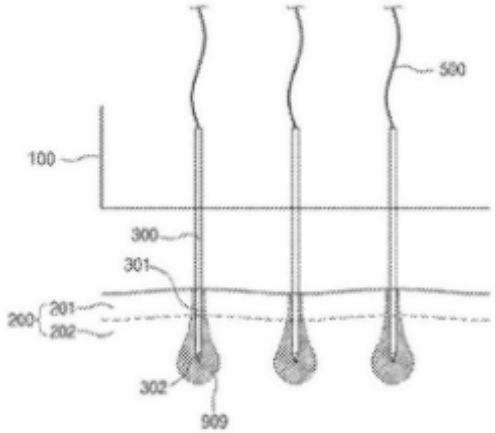

FIGURE 5

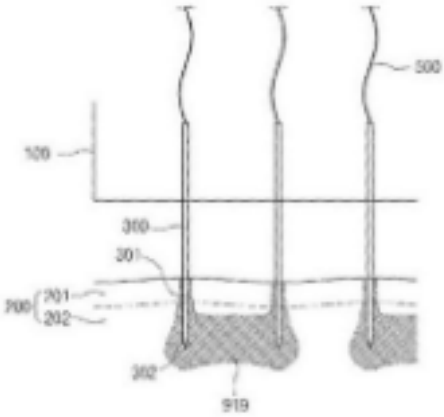

FIGURE 7

(JXM-0031 (IPR2022-00593 POPR) at 16 (Fig. 5), 18 (Fig. 7).).

As Respondents note, other than the two (2) embodiments of completely overlapping energy fields and non-overlapping energy fields, no other energy field formation is described in the specification or shown in its drawings that would elucidate the meaning of "substantially" in the context of the claims. (RMBr. at 85.).

In that IPR, Complainant argued that the non-overlapping/non-intersecting energy field embodiments (e.g., Figs. 2, 5, and 9B) require that the energy field for each electrode be applied only around the electrode (and no energy be transferred between electrodes). (JXM-0031 (IPR2022-00593 POPR) at 17-18.). That only leaves the ***overlapping/intersecting*** energy field

embodiments as potential support for understanding what substantially applying an energy field around an electrode means. However, the prosecution history of the ’444 patent shows that at least the examiner did not believe that the overlapping/intersecting energy field embodiments were covered by the independent claims of the ’444 patent. Specifically, the examiner allowed the claims because he understood the independent claim to require ***no*** overlap in energy fields, i.e., that each electrode complete the positive/negative flow path itself.

> ***Reasons for Allowance***
>
> The following is an examiner's statement of reasons for allowance: The applicant included the allowable subject matter requiring the RF signal to be oscillating current. This is illustrated in figure 6 of the applicant's drawings in which each individual needle changes polarity rapidly from negative to positive and vice versa. This produces the effect illustrated in figures 5 and 9B where the RF energy flows around individual needles rather than between needles as each individual needle is completing the positive/negative flow path itself. This subtle distinction does not appear to be disclosed in the Manstein reference.

(JXM-0012 (Prosecution History for the ’444 patent) at 429.).

Additionally, “cause[s] energy to be substantially applied to body segments around each electrode,” recited in claims 1 and 10 of the ’444 patent, must have a different meaning than “apply energy to body segments around each electrode ***rather*** than to body segments between the electrodes,” recited in claims 1 and 10 of the ’379 patent. *See Kara Tech. Inc. v. Stamps.com Inc.*, 582 F.3d 1341, 1347 (Fed. Cir. 2009) (“Difference among claims [including claims in different members of the same family] can . . . be a useful guide in understanding the meaning of particular claim terms”); *see also id.* at 1348 (“The asserted claims, in contrast to other claims in these patents, do not contain a limitation to a key embedded in the preestablished data, and we decline to read such a limitation into them”); *Helmsderfer v. Bobrick Washroom Equip., Inc.*,

527 F.3d 1379, 1382 (Fed. Cir. 2008) (declining to "construe the term 'partially hidden from view' to have the same meaning as 'generally hidden from view' or 'at least partially hidden from view" because different claim terms are presumed to have different meanings"); *In re Rambus Inc.*, 694 F.3d 42, 47-48 (Fed. Cir. 2012) (when "other claims in the" family include a specific limitation, the absence of the same language in a claim limitation of another family member means that the claim limitations do not have the same scope).

In sum, there is no disclosure in the intrinsic record that would help a person of ordinary skill in the art know how much or little overlap is needed to be considered substantial application around an electrode. While the law does not require mathematical precision in patent disclosures, *Interval Licensing*, 766 F.3d at 1371, a patentee cannot simply use the word of degree "substantially" and expect it to be understood by a person of ordinary skill in the art. Where, as here, the intrinsic record does not provide any standard of measure or other disclosure that provides "objective boundaries" of the claim scope, the claim term, "[causes/to cause] energy to be substantially applied to body segments around each electrode," is indefinite.[25]

VI. TERMS CONSTRUED IN THIS ORDER

Claim terms are construed in this Order solely for the purposes of this Section 337 Investigation. Only claim terms in controversy need to be construed, and then only to the extent necessary to resolve the controversy. *Vanderlande Indus. Nederland BV v. Int'l Trade Comm.*,

[25] Courts have previously found claims qualified by terms such as "substantially" to be indefinite. *See, e.g.*, *Effective Exploration, LLC v. Bluestone Nat. Res. II, LLC*, 2017 WL 3193322, at *22 (E.D. Tex. July 27, 2017) (term "extend in ***substantially*** opposite directions" held indefinite) (emphasis added); *Fiber, LLC v. Ciena Corp.*, 2017 WL 3896443, at *13 (D. Colo. Sep. 6 , 2017) (term "***substantially*** complete set" held indefinite where "[t]here is nothing in the specification that clarifies what portion of a 'complete set' would be a 'substantially complete set,'" as it could be a majority or at least one) (emphasis added); *Fairfield Indus., Inc. v. Wireless Seismic, Inc.*, 2015 WL 1034275, at *15 (S.D. Tex. Mar. 10, 2015) (holding term "***substantially*** prevent communication interference" to be indefinite where "the specification and prosecution history lack evidence that would inform a person skilled in the art as to how much interference prevention the patent contemplates sets it apart from patents that have overcome indefiniteness challenges") (emphasis added).

366 F.3d 1311, 1323 (Fed. Cir. 2004); *Vivid Tech., Inc. v. Am. Sci. & Eng'g, Inc.*, 200 F.3d 795, 803 (Fed. Cir. 1999).

As the Investigation proceeds, including during the evidentiary hearing ("Hearing") scheduled to be held **November 1-3, 6-7, 2023** and **December 12, 2023**, the Parties will be limited to the constructions adopted in this Order. Ground Rule 1.14 states that "[t]he parties will be bound by their claim construction positions set forth on the date they are required to submit a joint list showing each party's final proposed construction of the disputed claim terms and will not be permitted to alter these absent a timely showing of good cause." Modified or new constructions set forth for the first time in post-hearing briefs will be considered waived unless a party agrees with the other on a construction, thereby conceding its position.

Similarly, it will not be appropriate for any party to seek additional claim construction during the Hearing or merely to state that a claim term that may be implicated in an expert report or expert testimony has either a "plain or ordinary" meaning. (*See* G.R. 1.14.). If any party posits a "plain and ordinary meaning," it must be explained with a detailed rationale. (Order No. 9 at 2.). More to the point, there should not be any new, let alone previously disclosed claim terms that have an alleged "plain and ordinary" meaning without clear explanations. *Ipse dixit* arguments are not sufficient.

VII. PROCEEDINGS GOING FORWARD

A. Supplementation in Response to This Order

The Parties may not file supplemental expert reports in response to this Order. No additional discovery will be permitted because of this Order. No re-argument of the claims construed in this Order may occur.

As the Parties proceed in this Investigation, ***including before the Hearing that is about to commence***, they will be expected to notify Chambers of any issues that have become moot or

have been eliminated for any reason through a filing on EDIS. The Parties' required outlines that must identify any issues, claims, defenses, prior art, theories, or any other content that was originally asserted or argued, should identify all issues or contentions and claims that have been dropped or become moot for any reason.

The Parties should redact from expert reports and from any other documents upon which they intend to rely any issues, claims, defenses, prior art, theories, or any other content that has been rendered moot or disallowed as a result of this or other Orders, or termination from this Investigation of patent claims or allegations. The Parties must file on EDIS any expert reports or other documents upon which they intend to rely that have been redacted for the reasons stated above, and send copies to Chambers via McNamara337@usitc.gov.

B. Streamlining the Investigation

To the extent that this *Markman* Order will enable the Parties to streamline the Investigation, the Parties are encouraged to resolve promptly each issue in this Investigation for which there is no reasonable dispute or little, or weak, evidentiary support.

C. Settlement

It is strongly recommended that the Parties take informal opportunities to engage in settlement.

VIII. CONCLUSION

Constructions of the disputed claim terms are hereby adopted by this Order.

SO ORDERED.

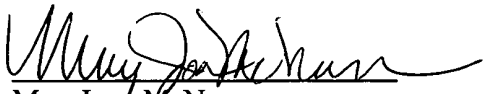

MaryJoan McNamara
Administrative Law Judge

ILOODA EXHIBIT 1005 - 69/69