IN THE UNITED STATES PATENT AND TRADEMARK OFFICE

BEFORE THE PATENT TRIAL AND APPEAL BOARD

In re *Inter Partes* Review of:

U.S. Patent No. 10,846,812

DECLARATION OF DANY BÉRUBÉ, PH.D.

TABLE OF CONTENTS

I. INTRODUCTION 1

II. BACKGROUND AND QUALIFICATIONS 2

III. MATERIALS REVIEWED 7

IV. RELEVANT LEGAL STANDARDS 9

V. TECHNOLOGY BACKGROUND 11

A. Microneedling Devices in the Aesthetics Industry 12

B. Use of Disposable Needles in Microneedling Devices 13

C. Fine Control of Microneedle Insertion Depth 13

D. Illumination of Treatment Areas 14

VI. OVERVIEW OF U.S. PATENT NO. 10,846,812 16

A. Summary 16

B. Prosecution History 20

C. Priority 21

D. Level of Ordinary Skill in the Art 25

E. Claim Construction 26

1. Agreed Constructions 26

2. Adopted Constructions 26

3. "a desired distance" / "predetermined depth" 27

VII. OVERVIEW OF THE PRIOR ART 29

A. Mehta (Ex-1006) 29

B. Na'848 (Ex-1007) 33

C. Lee (Ex-1008, Ex-1009) 34

D. Livneh (Ex-1010) 35

VIII. CLAIMS ANALYSIS 36

A. Ground I: Claims 1–3, 6, 8, and 12–16 Are Anticipated by Mehta 36

1. Independent Claim 12 36

2. Dependent Claim 13 53

3. Dependent Claim 14 60

4. Dependent Claim 15 64

5. Dependent Claim 16 66

6. Independent Claim 1 69

7. Dependent Claim 2 75

8. Dependent Claim 3 76

9. Dependent Claim 6 76

10. Dependent Claim 8 80

B. Ground II: Claims 1–6, 8, 10, and 12–17 Would Have Been Obvious over Mehta and the Knowledge of a POSA 80

1. Independent Claims 1 and 12 80

2. Dependent Claims 2 and 13 82

3. Dependent Claims 3 and 14 91

4. Dependent Claims 6, 8, and 15–16 91

5. Dependent Claims 4–5 and 17 93

6. Dependent Claim 10 100

C. Ground III: Claims 4–5 and 17 Would Have Been Obvious over Mehta, Na'848, and the Knowledge of a POSA 103

1. Motivation to Combine Mehta and Na'848 103

2. Dependent Claims 4 and 17 108

3. Dependent Claim 5 110

D. Ground IV: Claims 2–3, 6, 8, and 13–16 Would Have Been Obvious Over Mehta, Lee, and the Knowledge of a POSA 111

1. Motivation to Combine Mehta with Lee 111

2. Dependent Claims 2 and 13 114

3. Dependent Claims 3, 6, 8, and 14–16 116

E. Ground V: Claims 4–5 Would Have Been Obvious over Mehta, Lee, Na'848, and the knowledge of a POSA 116

1. Motivation to Combine Mehta, Lee and Na'848 117

F. Ground VI: Claims 1, 7, 9–12, and 18–20 Would Have Been Obvious over Livneh, Mehta, and the Knowledge of a POSA 117

1. Motivation to Combine Livneh with Mehta 118

2. Independent Claim 12 130

3. Dependent Claim 18 139

4. Dependent Claim 19 142

5. Dependent Claim 20 144

6. Independent Claim 1 144

7. Dependent Claim 7 149

8. Dependent Claim 9 150

9. Dependent Claim 10 150

10. Dependent Claim 11 153

IX. AVAILABILITY FOR CROSS-EXAMINATION 153

X. RIGHT TO SUPPLEMENT 154

XI. JURAT 154

I. INTRODUCTION

1. I, Dany Bérubé, Ph.D., declare as follows:

2. I have been retained as a technical consultant on behalf of Ilooda Co., Ltd. and Jeisys Medical Inc. (collectively "Petitioner"), who I understand is the petitioner in the present proceeding. I have been asked to consider whether the references listed as Exhibits 1006–1010 below disclose or render obvious the limitations recited in claims 1–20 of U.S. Patent No. 10,846,812 (the "'812 patent"). I have also been asked to consider the state of the art and the prior art available before the time of the alleged invention of the '812 patent. My opinions are provided in this declaration.

3. To the best of my knowledge, I have no financial interest in Petitioner. I have been informed that a company known as Serendia, LLC ("Serendia" or "Patent Owner") purports to own the '812 patent. To the best of my knowledge, I have no financial interest in Serendia and, to the best of my recollection, I have had no contact with Serendia or the named inventor of the '812 patent, Jongju Na. To the best of my knowledge, I similarly have no financial interest in the '836 patent. To the extent any mutual funds or other investments that I own have a financial interest in the Petitioner, the Patent Owner, or the '836 patent, I am not aware of, nor do I have control over, any financial interest that would affect or bias my judgment.

4. I am being compensated at my standard consulting rate for my time. My compensation is in no way contingent on the results of these or any other proceedings relating to the ’812 patent.

II. BACKGROUND AND QUALIFICATIONS

5. My name is Dany Bérubé. My qualifications and professional experience are described in my curriculum vitae, a copy of which is provided as Exhibit 1004. The following is a brief summary of my relevant qualifications and professional experience.

6. I currently work for Lutronic Aesthetic, Inc. as Vice President of Advanced Research and Innovations. I started the position on August 11, 2023.

7. I previously held the position of Vice President of Scientific Affairs and Innovations with Sofwave Medical. In that position, I identified and developed strategies and products aimed at addressing existing and new market opportunities in the area of skin treatment technology in the aesthetic industry. In addition, I developed the company’s intellectual property portfolio, including IP related to the company’s skin treatment technology. While working for Sofwave Medical, I performed finite element analyses (FEA) to model tissue heating for skin treatment devices for the treatment of wrinkles and skin laxity in the aesthetic industry using different energy types, including ultrasound and radiofrequency (RF). I have also used FEA to model various competitive devices such as RF microneedling devices.

I have extensive experience in thermal analysis, acoustic, RF, microwave, and laser modeling.

8. I received a Doctor of Philosophy degree from École Polytechnique de Montréal in Biomedical Engineering in 1998. I received my First Degree (Bachelor's) in 1993 from Université Laval in Quebec, Canada in Physic Engineering. During my Ph.D. thesis, I developed and characterized Microwave Ablation Systems for the Treatment of Cardiac Arrhythmias using electromagnetic energy. The aim of the study was to overcome known issues and limitations with current and traditional RF ablation systems.

9. During my studies, I received numerous Scholarships and Awards, such as a High Distinction form the Montreal University for Ph.D. thesis, which was selected in the top three best thesis of the year. I received scholarships from the Canadian government during my Ph.D. studies, and from the government of Quebec during my Master studies. I also received scholarships from the Canadian government during my undergraduate studies, and have been selected as member of the Table of Honor after the completion of my Engineering studies.

10. I have worked in the area of biomedical engineering for over 25 years, always involved with products using electromagnetic, radiofrequency, or ultrasonic energy interaction with biological tissues to treat medical issues or conditions. I have experience in research and development of medical devices, scientific affairs,

patent strategies, finite element analysis, and the treatment of skin using RF and other energy modalities. In particular, I am experienced in modeling the effects of treatment devices on biological tissue using thermal, acoustic, RF, microwave, and laser modeling. I have also written and published peer-reviewed articles related to RF microneedling technology, science, and clinical results. In particular, I published peer-reviewed article characterizing the thermodynamic aspects of collagen denaturation and its influence on clinical results for the treatment of facial wrinkles and skin laxity.

11. From 2008 to 2020, I worked as Vice President of Research and Development (Profound Division) and Vice President of Global Business Development and Strategy for Candela Medical (f/k/a Syneron) and for Primaeva Medical before its acquisition by Syneron. I led the development of the company's RF microneedling technology called "Profound" from inception to commercial release and managed all products and software updates during my tenure. In addition, I developed and implemented the IP portfolio related to the Profound technology. I acted as a hands-on scientist and performed Finite Element Analysis to model the radiofrequency and laser interactions with biological tissues in order to investigate and improve treatment concepts. Shown below are some of the RF microneedling devices I developed:

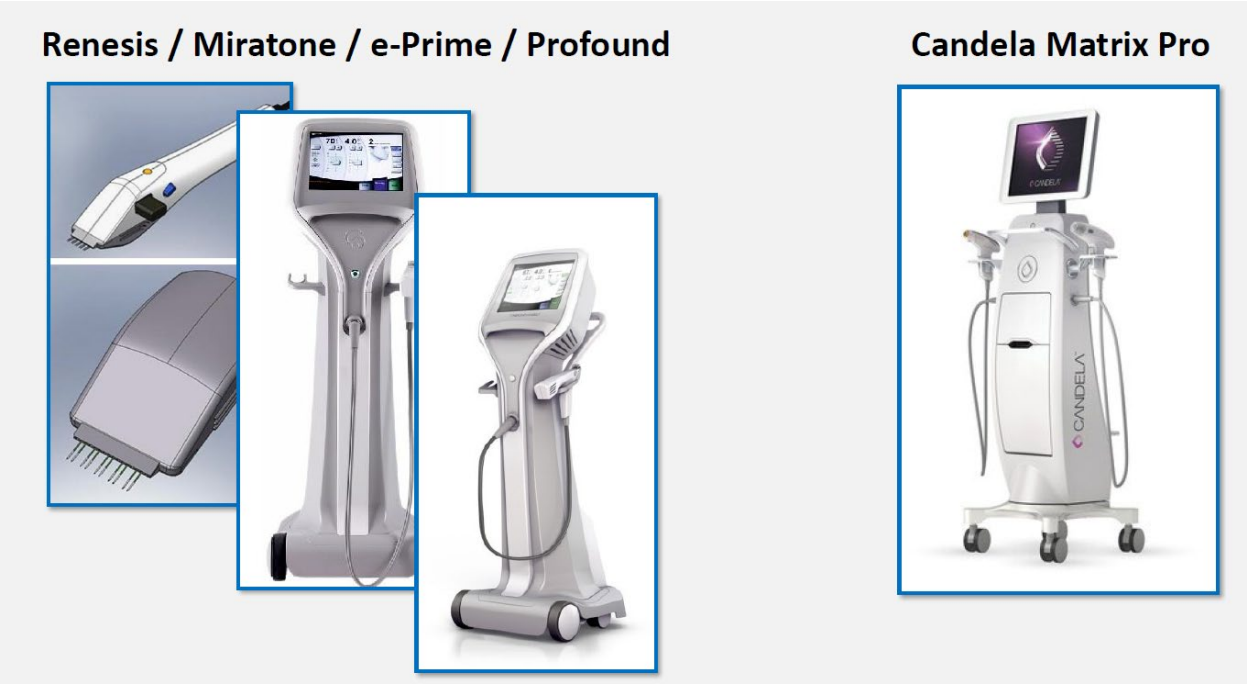

12. In the past five years, I have testified at trial or by deposition in the following matters:

- ITC investigation by Syneron Medical Ltd. – Certain Radio Frequency Micro-Needle Dermatological Treatment Devices and Components Thereof, 337-TA-1112, ITC, Judge Lord.
- ITC investigation by Serendia, LLC – Certain Dermatological Treatment Devices and Components Thereof, 337-TA-1356, ITC, Judge McNamara.

13. I have been working in the cardio-vascular space from 1998 to 2008 prior to starting in the esthetic field. During my tenure at AFx, I developed the first surgical microwave ablation system to treat stand-alone atrial fibrillation (AF) on beating heart without cardio-pulmonary bypass, using thoracoscopic or robotic access. I also worked with cardiac surgeons to develop the technical aspects of the

surgical procedure. I also published several technical and clinical papers, and abstracts.

14. During my PhD study, I reviewed and characterized TTC-stained myocardium obtained acutely and 1 month after receiving microwave ablation treatments using different energy settings. I also performed similar measurements during my tenure at AFx to provide data aimed at obtaining 510k clearance for the microwave ablation devices. During my tenure at Primaeva/Syneron/Candela, I have also been directly involved in reading histology slides in human skin to characterize the zones of thermal injuries created by an array of bipolar radiofrequency needles, and to distinguish between collagen denaturation and coagulation. I have been involved in techniques used to evaluate skin tissue sections in order to properly characterize the maximal cross-sectional dimensions of a thermal injury. I received direct in-house training from Dr. Basil Hantash, PhD, who is a board-certified dermatologist with direct expertise in the field of skin science and research. I published a peer-reviewed article where a simulation model of a pair of bipolar RF needle used to create thermal injuries in the skin was validated using human skin histology results. I have also reviewed numerous histology slides to assess human adipocyte apoptosis or necrosis obtained with a clinical prototype using RF energy. During my tenure with Sofwave, I reviewed numerous histology slides obtained with a non-focused ultrasonic transducer to

create thermal injuries in the skin of an animal model. I presented the results of a simulation model validation during an international dermatology meeting (ASLMS 2021) where histology data was used, and where I showed how to compensate the measurements data for tissue shrinkage.

III. MATERIALS REVIEWED

15. I am not an attorney and offer no legal opinions, but in my work, I have had experience studying and analyzing patents and patent claims from the perspective of a person skilled in the art.

16. In preparing this declaration, I reviewed the ’812 patent, including the claims of the patent in view of the specification, and I have reviewed the prosecution history of the ’812 patent and numerous prior art and technical references from the time of the alleged invention. More specifically, I have reviewed each of the following:

Exhibit	Description
1001	U.S. Patent No. 10,869,812 (“the ’812 Patent”)
1002	File History of the ’812 Patent
1005	Order No. 35: Construing Certain Terms of the Asserted Claims, Inv. No. 337-TA-1356
1006	U.S. Patent No. 8,608,737 to Mehta *et al.* (“Mehta”)
1007	International Patent Application Publication No. WO 2010/016848 by Na et al. (“Na’848”)

Exhibit	Description
1008	Korean Registered Utility Model KR20–0441552 to Lee *et al.* ("Lee")
1009	Certified Translation of Korean Registered Utility Model KR20–0441552 to Lee *et al.* ("Lee")
1010	International Publication Number WO 2008/005477 by Livneh ("Livneh")
1011	U.S. Patent No. 8,540,705 to Mehta *et al.* ("Mehta'705")
1012	U.S. Patent No. 9,775,774 to Na ("'774 patent")
1013	U.S. Patent Application Publication No. 2009/0093749 by Shalev *et al*. ("Shalev")
1014	U.S. Patent Application Publication No. 2009/0048557 by Yeshurun *et al*. ("Yeshurun")
1015	Korean Registered Patent KR10-0719395 to Kang ("Kang")
1016	Certified Translation of Korean Registered Patent KR10-0719395 to Kang ("Kang")
1017	U.S. Patent No. 7,824,394 to Manstein ("Manstein")
1018	U.S. Patent No. 7,618,429 to Mulholland ("Mulholland")
1019	U.S. Patent Application Publication No. 2007/0142885 by Hantash *et al*. ("Hantash")
1020	U.S. Application No. 61/449,080 by Na ("Na'080")

IV. RELEVANT LEGAL STANDARDS

17. I am not an attorney. For the purposes of this declaration, I have been informed about certain aspects of the law that are relevant to forming my opinions. I have applied the following understanding of the law:

18. I have been informed that a patent claim may be "anticipated" if each element of that claim is present either explicitly or inherently in a single prior art reference, and that the elements should be arranged in the reference as in the claim. Petitioner's counsel has informed me that for a claimed limitation to be inherently present, the prior art need not expressly disclose the limitation, so long as the claimed limitation necessarily flows from a disclosure in the prior art.

19. I have been informed that a patent claim can be considered to have been obvious to a person of ordinary skill in the art at the time the application was filed. This means that, even if all of the requirements of a claim are not found in a single prior art reference, the claim is not patentable if the differences between the subject matter in the prior art and the subject matter in the claim would have been obvious to a person of ordinary skill in the art at the time the application was filed.

20. I have been informed that a determination of whether a claim would have been obvious should be based upon several factors, including, among others:

- the level of ordinary skill in the art at the time the application was filed;

- the scope and content of the prior art; and
- what differences, if any, existed between the claimed invention and the prior art.

21. I have been informed that a single reference can render a patent claim obvious if any differences between that reference and the claims would have been obvious to a person of ordinary skill in the art. Alternatively, the teachings of two or more references may be combined in the same way as disclosed in the claims, if such a combination would have been obvious to one having ordinary skill in the art. In determining whether a combination based on either a single reference or multiple references would have been obvious, it is appropriate to consider, among other factors:

- whether the teachings of the prior art references disclose known concepts combined in familiar ways, and when combined, would yield predictable results;
- whether a person of ordinary skill in the art could implement a predictable variation, and would see the benefit of doing so;
- whether the claimed elements represent one of a limited number of known design choices, and would have a reasonable expectation of success by those skilled in the art;

- whether a person of ordinary skill would have recognized a reason to combine known elements in the manner described in the claim;
- whether there is some teaching or suggestion in the prior art to make the modification or combination of elements claimed in the patent; and
- whether the innovation applies a known technique that had been used to improve a similar device or method in a similar way.

22. Petitioner's counsel has informed me that one of ordinary skill in the art has ordinary creativity and is not an automaton. Petitioner's counsel has informed me that in considering obviousness, it is important not to determine obviousness using the benefit of hindsight derived from the patent being considered.

V. TECHNOLOGY BACKGROUND

23. For this declaration, I have assumed that the priority date of the challenged claims is March 3, 2011.[1] Thus, for purposes of this analysis, I assume that the time of the purported invention of the '812 patent was March 3, 2011 and have provided an overview of the background of the relevant technology at that time.

[1] *See infra* Section VI.C.

A. Microneedling Devices in the Aesthetics Industry

24. Microneedling devices were well-known in the aesthetics industry prior to March 3, 2011. For example, in 2008, Syneron began development of the ePrime system (also known by the names "Renesis" and "Miratone" and now marketed by Candela Medical (who acquired Syneron) as the Profound system). The Profound system is a bipolar RF microneedle system designed to create fractional thermal injuries in the dermis and thereby elicit the production of new collagen, elastin, and hyaluronic acid. The Profound system (then known as ePrime) was cleared by the U.S. Food and Drug Administration (FDA) for hemostasis and electrocoagulation in 2007 and for the percutaneous treatment of facial wrinkles in 2009. The Profound system was fully commercialized and sold in the US by 2010.

25. In addition, Jeisys commercially released, in 2009, a bipolar RF microneedle system (i.e. the INTRAcel system) in Asia. The INTRAcel system utilized a rectangular array of multiple microneedles to create fractional thermal injuries in dermis, thereby providing for the percutaneous treatment of facial wrinkles.

26. Furthermore, microneedle systems had also been disclosed, prior to March 3, 2011, by Mehta (*i.e.*, Ex-1006), Na'848 (*i.e.*, Ex-1007), U.S. Patent No. 7,824,394 to Manstein ("Manstein") (*i.e.*, Ex-1017), U.S. Patent No. 7,618,429 to

Mulholland ("Mulholland") (*i.e.*, Ex-1018), and U.S. Patent Application Publication No. 2007/0142885 by Hantash et al.("Hantash") (*i.e.*, Ex-1019).

B. Use of Disposable Needles in Microneedling Devices

27. Before March 3, 2011, it was well-known to use disposable components in medical devices and, in particular, to use disposable cartridges in microneedling devices in the aesthetics industry. For example, the Profound system, which was commercialized and sold in the U.S. in 2010, utilized detachable, disposable needle cartridges designed for the Profound console and handpieces. The user manual for the Profound system included warnings that cautioned against reusing the disposable needle cartridges to limit the risk of infection and patient-to-patient transmission of blood-based diseases. In addition, detachable, disposable needle cartridges were also disclosed by Mehta (*see*, *e.g.*, Ex-1006, Fig. 2D), Hantash (*see*, *e.g.*, Ex-1019, Fig. 14B, ¶72), and U.S. Patent Application Publication No. 2009/0093749 by Shalev et al. ("Shalev") (*see*, *e.g.*, Ex-1013, Fig. 8, ¶¶179–180).

C. Fine Control of Microneedle Insertion Depth

28. Before March 3, 2011, it was known to provide for fine control of needle insertion depth in microneedling treatment.

29. Components suitable for producing fine translational control of microneedles, such as, step-motors, solenoids, pneumatic actuators, and other

similar technologies, had been known for decades prior to March 3, 2011. Furthermore, the use of a step-motor in a microneedling device to control microneedle insertion depth in a microneedling treatment device was disclosed by Lee. *See* Ex-1009, <21>, <44>, <50>, <60>–<61>, and <69>. The use of a step-motor in a microneedling device to provide translational movement of an electrode assembly containing RF microneedles was also disclosed by Mehta. *See* Ex-1006, 15:36–40.

D. Illumination of Treatment Areas

30. Before March 3, 2011, it was generally known to illuminate medical devices. And it was known in the aesthetics industry to illuminate microneedling treatment devices and components thereof—as well as to illuminate an area of the skin being treated by a microneedling treatment device.

31. Prior to March 3, 2011, the Profound system was sold with a 3-color LED (red, green, blue) assembly provided on the top of the handpiece. The Profound system's LED assembly provided different colors of illumination to communicate the status of the device, or of a patient's tissue, to a physician (specifically, a red color was provided to indicate an error, a blue color was provided during application of RF energy to provide a visual indication of the application of the RF energy, and a green color was provided when the needles were retracted within the cartridge to provide a visual indication that it is safe to

move the handpiece to a next adjacent treatment location). The same feature is still being used by the Profound system that is marketed and sold today. In addition, Shalev disclosed the use of an LED to provide a physician with a signal indicating that the temperature of a patient's skin has exceeded a threshold value in response to receiving RF energy. *See* Ex-1013, ¶¶287–288. Korean Registered Patent KR10-0719395 to Kang ("Kang") (*i.e.*, Ex-1015, Ex-1016) teaches a dermatological radiofrequency device for cosmetic treatment and, specifically, a device in which a light-emitting member (*e.g.*, LED) "emits a predetermined color at the same time as the high frequency is applied." Ex-1016, 4; *see also id*., Abstract, cl. 4.

32. Prior to March 3, 2011, it was also well-known to provide illumination during the treatment of skin, e.g. using microneedling devices. Multiple types of light therapy for treating skin were well known and had been known for decades. Such light therapy includes, for example, using wavelengths in the infrared spectrum, provided, *e.g.*, by a laser or light emitting diode (LED), to heat a region of the patient's skin. Na'848, for example, discloses the use of an LED to generate infrared radiation that is directed to skin tissue into which microneedles are to be inserted. *See*, *e.g.*, Ex-1007, ¶¶44–48. As another example, U.S. Patent Application Publication No. 2009/0048557 by Yeshurun *et al*. ("Yeshurun") (*i.e.*, Ex-1014) discloses a handheld device for providing dermabrasion treatment, the handheld device having LEDs for providing

illumination to the region of skin subject to dermabrasion. *See*, *e.g.*, Ex-1014, ¶¶86, 90, and 94. It was also well-known to embed such LEDs into a handheld device, as evidenced by Yeshurun. *See*, *e.g.*, *id*., Fig. 8, 94.

VI. OVERVIEW OF U.S. PATENT NO. 10,846,812

A. Summary

33. The ’812 patent relates to systems and methods “used in treating dermatological tissue.” Ex-1001, 1:33–35. Specifically, the ’812 Patent describes a handheld dermatological treatment apparatus 10 with a handle 220 coupled to an acupuncture plate 200, which includes an acupuncture section or layer 250 with a plurality of acupuncture pins or needles 230. *Id*., 2:65–67, 3:11–12. A treatment apparatus including a plurality of acupuncture pins or needles 230 is used to create a plurality of “micro-wounds or holes in dermatological layers of a mammal’s [] skin or dermis.” *Id.*, 3:34–36. These micro-wounds or holes created by the dermatological treatment apparatus 10 enhance absorption or application of chemicals applied to the mammal’s skin. *Id.*, 36–39.

34. The ’812 patent describes at least two general ways in which the plurality of needles can be utilized in the dermatological treatment apparatus. Specifically, the needles may either be fixed and non-extendable (such as depicted in Fig. 2B (reproduced below)) or extendable via a motor (such as depicted in Figs. 9C–9D (excerpts reproduced below)):

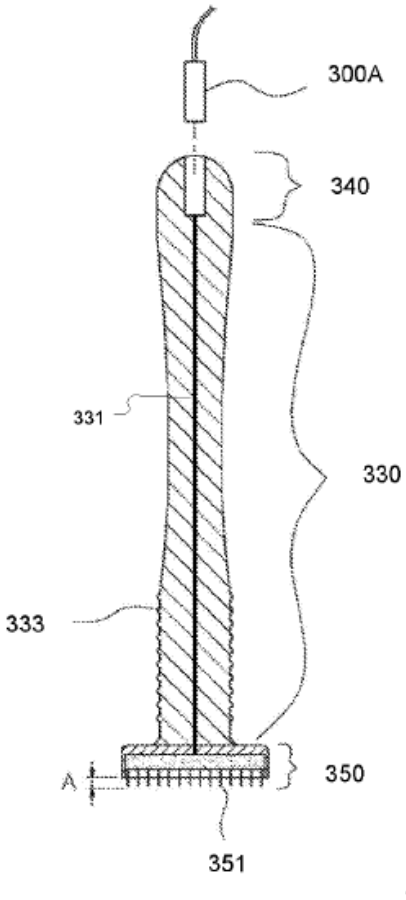

FIGURE 2B

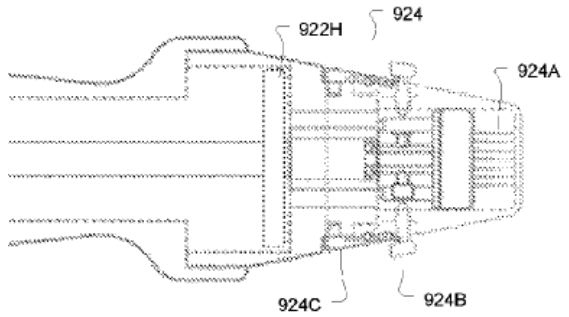

FIGURE 9C

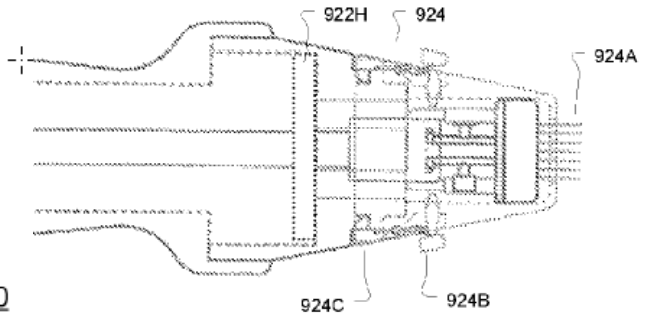

FIGURE 9D

'812 Patent—Figs. 2B, 9C, and 9D

The hand module 920 includes "a deployable needle module (DNM) 924," that "may be changed between therapy application(s) or client(s)" and "disposed after usage or cleaned," and "a motor and LED module (MLM) 922." Ex-1001, 11:6–14. Fig. 10A (reproduced below) illustrates the DNM 924 decoupled from the MLM 922.

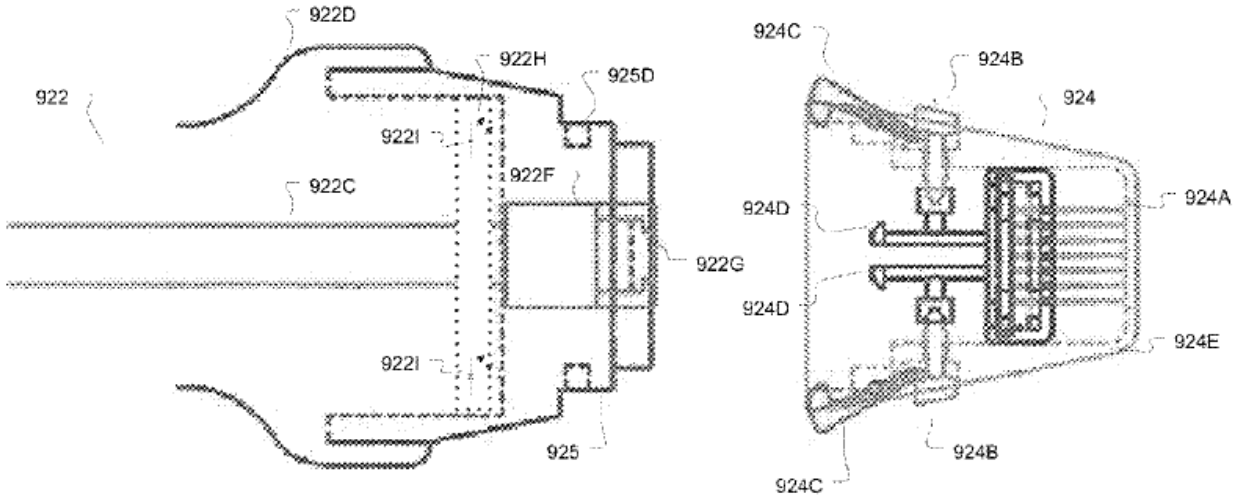

'812 Patent—Fig. 10A

The MLM 922 includes one or more motors and drive shafts to deploy and retract needles 924A of the DNM 924. Ex-1001, 11:15–19. Fig. 11A (reproduced below) illustrates needles 924A in a deployed position.

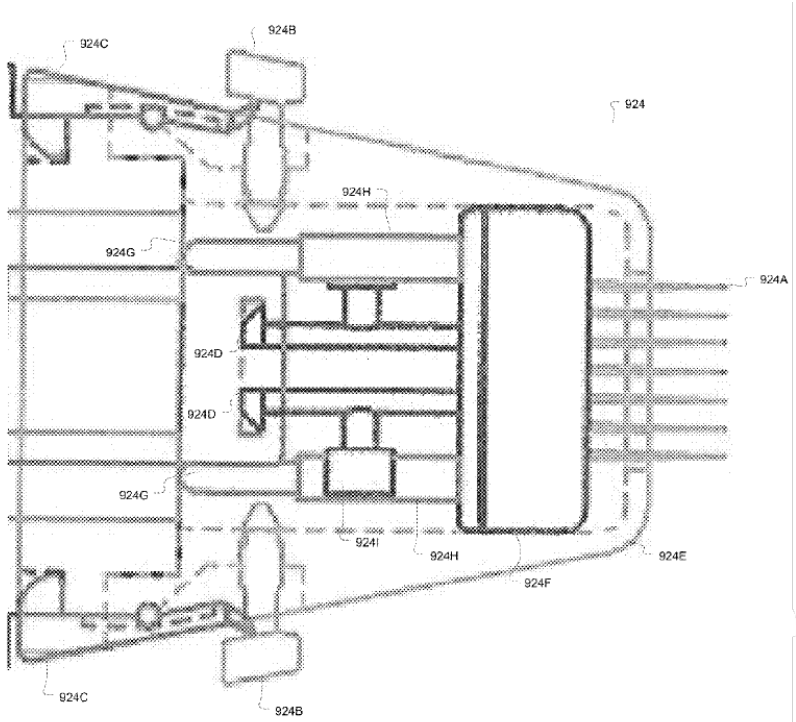

'812 Patent—Fig. 11A

The DNM 924 includes needle assembly 924F, illustrated in Figs. 11B and 11C (reproduced below).

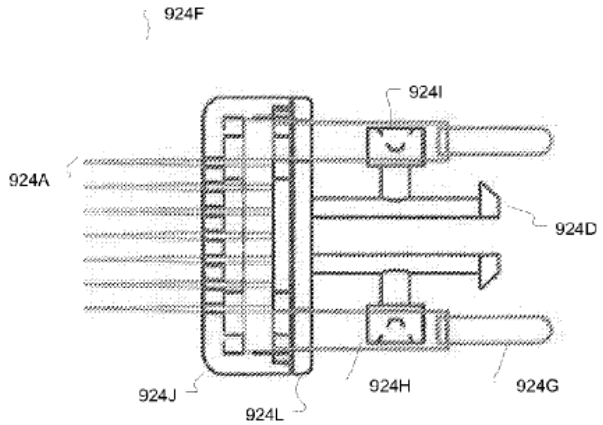

FIGURE 11B

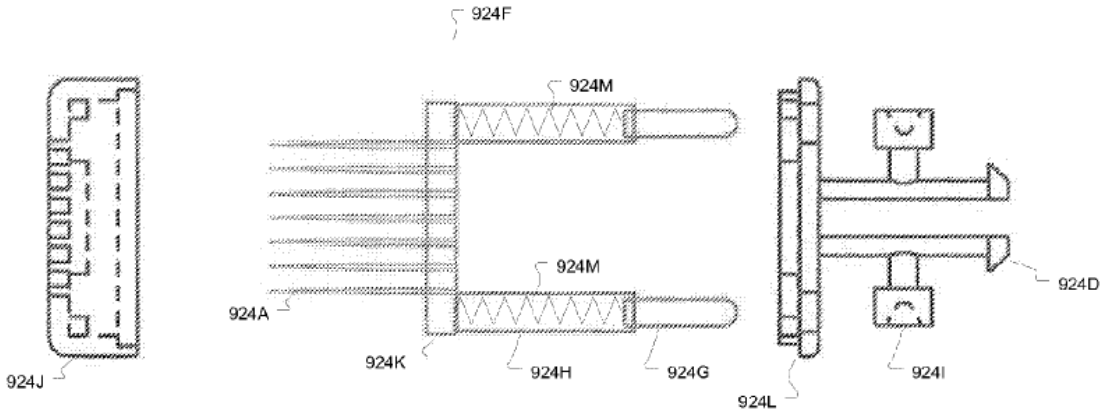

FIGURE 11C

'812 Patent—Figs. 11B and 11C

35. To apply treatment, a controller module generates signals to control deployment of the needles, and a signal generator module generates electrical signals applied to the needles. *Id.*, 10: 33–51.

B. Prosecution History

36. I have reviewed the prosecution history of Application No. 15/724,261 that led to the ’812 patent.

37. The application leading to the ’812 patent (U.S. Appl. No. 13/825,083) was filed on October 3, 2017, with 20 original claims. Ex-1002, 106–108. The Applicant submitted a Preliminary Amendment, on November 15, 2017, in which all 20 original claims were cancelled and new claims 21–40 were added. *Id.,* 522–526. On August 7, 2018, the Patent Office issued a Non-Final Office Action in which claims 21–40 were rejected as being unpatentable over The General Hospital (“General,” WO 2005/09699) in view of Yang, Won Dong (“Yang”, KR 10-2011-00002210). *Id.,* 579–580. In the same Office Action, claims 21–40 were also rejected on the ground of nonstatutory double patenting as being unpatentable over claims 1–20 of the ’536 Patent. *Id.,* 579–580. During the Applicant-initiated interview on October 4, 2018, the Applicant amended claims 21–30, 32–34, and 36–40. *Id.* 615–619. On March 4, 2019, the Patent Office issued a Final Office Action, in which the nonstatutory double patenting rejection was maintained because of the terminal disclaimer filed by the Applicant was not in compliance. *Id.,* 647–649. The Applicant failed to timely filed a proper reply to the Final Office Action, and a Notice Of Abandonment was issued on September 17, 2019. *Id.,* 656–657. A terminal disclaimer was filed on April 10, 2020 with further

amendments to the claims 21, 22, 24–34, and 36–40. *Id.* 664, 674–78. The Patent Office disapproved the terminal disclaimer was disapproved. *Id.,* 682. The terminal disclaimer was approved on April 20, 2020. *Id.* at 685. A Notice of Allowance was then issued on August 20, 2020, and the ’812 patent issued on December 22, 2020. *Id.,* 716.

C. Priority

38. I understand that the priority date of the claims of the ’812 patent depends on whether the features recited in the claims of the ’812 patent are disclosed in the documents to which priority is claimed. I also understand the claims of the ’812 patent only have priority to the earliest document in which claimed features are disclosed.

39. As depicted below, the ’812 patent recites priority to a parent application which in turn claims priority to two separate chains: (1) the “2011 provisional chain” and (2) the “2008 Korean chain,” which includes Na’848 (*i.e.*, Ex-1007).

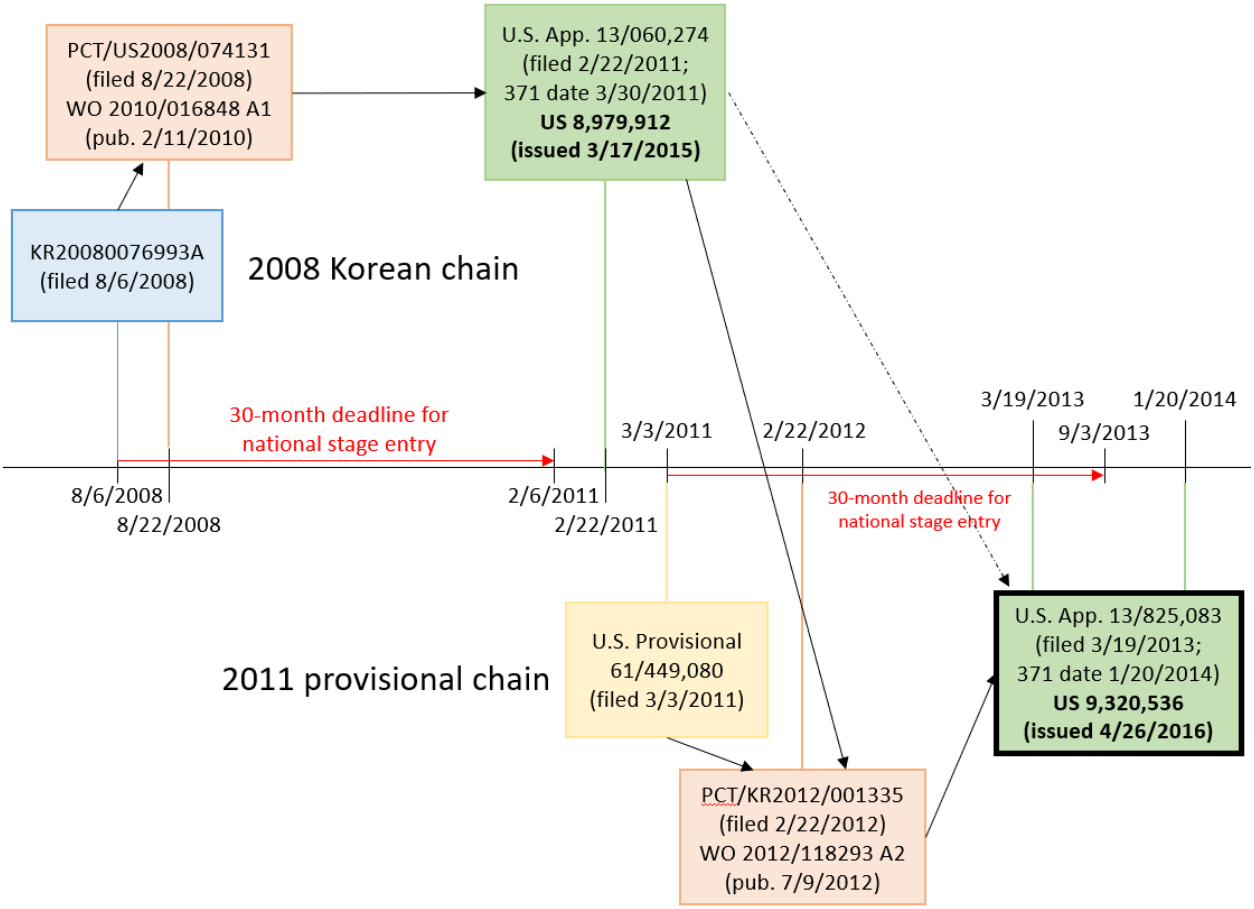

I understand that a patent application may rely on the filing date of an earlier-filed application only if one or more claims have written description support in the earlier-filed application. I also understand that, in order to satisfy the written description requirement, the specification must reasonably convey to a POSA that the inventor had possession of the claimed subject matter.

40. Independent claims 1 and 12 of the ’812 patent require “the needle assembly movable within the releasably couplable deployable needle module to extend the plurality of needles from the releasably couplable deployable needle assembly end surface.” It is my opinion that Figs. 11B and 11C illustrate the

needle assembly 924F and Fig. 11A illustrates the deployable needle module 924 which includes the needle assembly 924F. Further, Figs. 9C–9D of the ’812 patent illustrates “the needle assembly movable within the releasably couplable deployable needle module.” In the Detailed Description regarding Figs. 9C–9D, the ’812 patent describes that a motor is used to drive needles of the treatment apparatus between a retracted position, as illustrated in Fig. 9C, and a deployed position, as illustrated in Fig. 9D. Ex-1001, 10:66–11:8, 11:23–27.

41. I have reviewed Na’848, the international patent application from the 2008 Korean chain to which the ’812 Patent claims priority. Na’848 discloses figures and written descriptions regarding needles which are fixed and non-extendable, which are largely similar to the figures and written descriptions regarding fixed and non-extendable needles in the ’812 Patent. For example, Fig. 2B of Na’848 is identical to Fig. 2B of the ’812 patent. However, Na’848 does not disclose “a releasably couplable needle module” which includes a needle assembly, let alone a “needle assembly movable within the releasably couplable deployable needle module to extend the plurality of needles from the releasably couplable deployable needle assembly end surface.” *See* Na’848 at Figs. 1A, 1B, 2B, 2C, 2D, 3A, 3B (which are identical to Figs. 1A, 1B, 2B, 2C, 2D, 3A, 3B of the ’812 patent).

42. Based on the absence of disclosure in Na'848 of "needle assembly movable within the releasably couplable deployable needle module to extend the plurality of needles from the releasably couplable deployable needle assembly end surface," it is my opinion that Na'848 does not provide adequate disclosure to support claims 1 and 12 of the '812 patent. It is therefore my understanding that the claims of the '812 patent do not have priority to the filing date of Na'848.

43. U.S. Application No. 61/449,080 ("Na'080"; Ex-1020), *i.e.*, the progenitor application of the 2011 provisional chain, to which the '812 patent also claims priority, is a provisional application filed after Na'848 on March 3, 2011. In contrast to Na'848, Na'080 illustrates and describes "needle assembly movable within the releasably couplable deployable needle module to extend the plurality of needles from the releasably couplable deployable needle assembly end surface," as illustrated in Figs. 9C, 9D, 11A, 11B, 11C of Na'080. Accordingly, it is my opinion that Na'080 provides adequate disclosure to support independent claims 1and 12 of the '812 patent. It is therefore my understanding that the claims of the '812 patent would have priority to the filing date of Na'080, which is March 3,

2011. It is further my understanding that the critical date of the ’812 with respect to prior art would therefore also be March 3, 2011.[2]

D. Level of Ordinary Skill in the Art

44. It is my understanding that factors defining the level of ordinary skill in the art include: (1) the types of problems encountered in the art; (2) the prior art solutions to those problems; (3) the rapidity with which innovations are made; (4) the sophistication of technology; and (5) the educational level of active workers in the field.

45. I understand that, in the ITC lawsuit by Serendia, LLC – Certain Dermatological Treatment Devices and Components Thereof, 337-TA-1356, ITC, Judge McNamara (“ITC Lawsuit”), the Administrative Law Judge ruled that a person of ordinary skill in the art (“POSA”) would have had “(1) 7-10 years of experience with developing and/or using treatment systems for delivery of electromagnetic radiation energy to skin or other tissues, and (2) a related graduate engineering degree or M.D. The POSA may have worked as part of a multidisciplinary team and drawn upon not only his or her own skills, but also

[2] I have been informed irregularities in both the 2008 Korean chain and the 2011 provisional chain may result in the priority date of certain claims of the ’812 patent being as late as March 19, 2013, *i.e.*, the filing date of the application that issued as the ’536 patent (the parent patent of the ’812 patent). However, for the purposes of this declaration, I have assumed that the priority date of the claims of the ’812 patent is March 3, 2011.

would have taken advantage of certain specialized skills of others on the team when solving a technical problem." Ex-1005, 14.

46. I applied this definition of a POSITA in forming my opinion in this declaration.

E. Claim Construction

1. Agreed Constructions

47. In forming my opinion in this declaration, I have been asked to assume that the following terms have the meaning that the Petitioners and the Patent Owner have agreed to in the ITC Lawsuit, shown below. Ex-1005, 15–16.

Term	Claims	Agreed Construction
Preamble	1, 12	Preambles are limiting
"a user holdable device releasably couplable deployable needle module end surface"	1	Plain and ordinary meaning: the end surface of the deployable needle module past which needles can be extended, the module is releasably couplable to a user holdable device proximal end
"a particular signal"	13	Plain and ordinary meaning: an electrical motor control signal
"predetermined intensity"	6	Plain and ordinary meaning: the electrical signal intensity selected for treatment

2. Adopted Constructions

48. I understand that the Administrative Law Judge in the ITC Lawsuit adopted the following constructions. Ex-1005, 16–32.

Term	Claims	Adopted Construction
"deployable needle assembly end surface"	1, 12, 13	the plane defined by the tips of the needles of the deployable needle assembly when the needles are not extended, the needle

Term	Claims	Adopted Construction
		assembly can be movable within a needle module that is releasably couplable to the proximal end of a user holdable device
"separatably"	1, 12	separable

3. "a desired distance" / "predetermined depth"

49. In my opinion, the terms "a desired distance" (in claims 2, 8, and 13) and "predetermined depth" (in claim 6) should be given their plain and ordinary meaning. The term "desired distance" simply distinguishes between needles which extend a desired distance as opposed to an undesired distance. For example, a POSA would understand in the context of the '812 patent that "a desired distance" corresponds to a distance that is suitable for treatment of dermatological tissue (as opposed to an undesirable distance where the needles are too long or too short for the intended treatments). A POSA would have understood the plain and ordinary meaning of "predetermined depth" to be a depth that is determined beforehand.

50. I understand that Serendia may contend that the plain and ordinary meaning of the term "desired distance" should be interpreted to require a user-selectable distance of needle extension along the axis of needle extension. I further understand that Serendia may contend that "desired distance" should be interpreted to exclude: (1) needles which are extendable by a "fixed," predetermined distance; and (2) needles which are extendable to a distance chosen by selecting a particular

angle of insertion. Serendia's proposed interpretation of "desired distance" should be rejected because they are contrary to the plain meaning of that term.

51. Furthermore, Serendia's proposed interpretation of "desired distance" is inconsistent with the context provided by the specification of the '812 patent. The '812 patent describes non-extendable needles or pins 351 of a dermatological treatment apparatus that may be placed in contact with skin to cause micro-wounds or cuts in the skin. *See* Ex-1001, 3:51–54, 4:49–53. Indeed, in the related '774 patent (Ex-1012), the term "desired distance" is used in claims 1 and 11 to refer to non-extendable needles extending a fixed distance from a surface. *See also* Ex-1005, 16. Accordingly, the '812 patent describes that a distance of needle extension may include a fixed or predetermined distance dictated by the length of needles. It is my opinion that a POSA would understand the plain meaning of "desired distance" to encompass such a fixed, predetermined, and/or manually selected distance, e.g. a distance dictated by the length of one or more needles.

52. The '812 patent describes that in the context of extendable (*e.g.*, retractable and deployable) needles, the needles of a dermatological treatment device may be deployed "to a desired extension beyond [a detachable cartridge module] 924…to enable a desired depth of needle 924A penetration within tissue." Ex-1001, 14:14–20. This "desired extension" may be selected by a user and implemented by a central processing unit (CPU) 911 via control of a motor for

deploying the needles. *Id.*, 14:21–34, Fig. 12. The "desired extension" of the needles is selected once along with other parameters selected by a user or the CPU, such as electrical signal intensity, signal start delay, number of shots per activation, and signal duty cycle. *Id.*, 13:63-66, 14:21–24, Fig. 12. The treatment apparatus is then repeatedly "activated" (*e.g.*, caused to carry out its intended function by energizing and actuating its various components) based on the selected parameters. *Id.*, Fig. 12. Therefore, a POSA would understand the plain meaning of "desired distance" to also encompass any user-selected and/or repeatedly implemented needle deployment distance.

VII. OVERVIEW OF THE PRIOR ART

A. Mehta (Ex-1006)

53. Mehta is a U.S. patent that issued from an application filed on April 20, 2009, which is a continuation of a patent application filed on February 6, 2009. Ex-1006, Title Page. I understand that Mehta qualifies as prior art at least under pre-AIA 35 U.S.C. § 102(e). Mehta teaches a microneedling treatment device having needles, wherein energy is applied through the needles to affect a patient's skin into which the needles are inserted. *Id.*, 2:63–3:17.

54. Mehta describes a microneedling device having an extendable array of probes. *Id.,* Abstract, 15:42–49. The probes are used to treat tissue in the human body by precisely delivering energy to regions beneath the surface of tissue

without affecting the outer layer of skin. *Id.*, Abstract, 1:14–19, 2:37–57. The energy delivered by the probes can break down subcutaneous fat cells or other specifically targeted layers of tissue, allowing the device to aid in body contouring, reducing cellulite, and treating other skin surface imperfections and blemishes. *Id.*, 2:45–57.

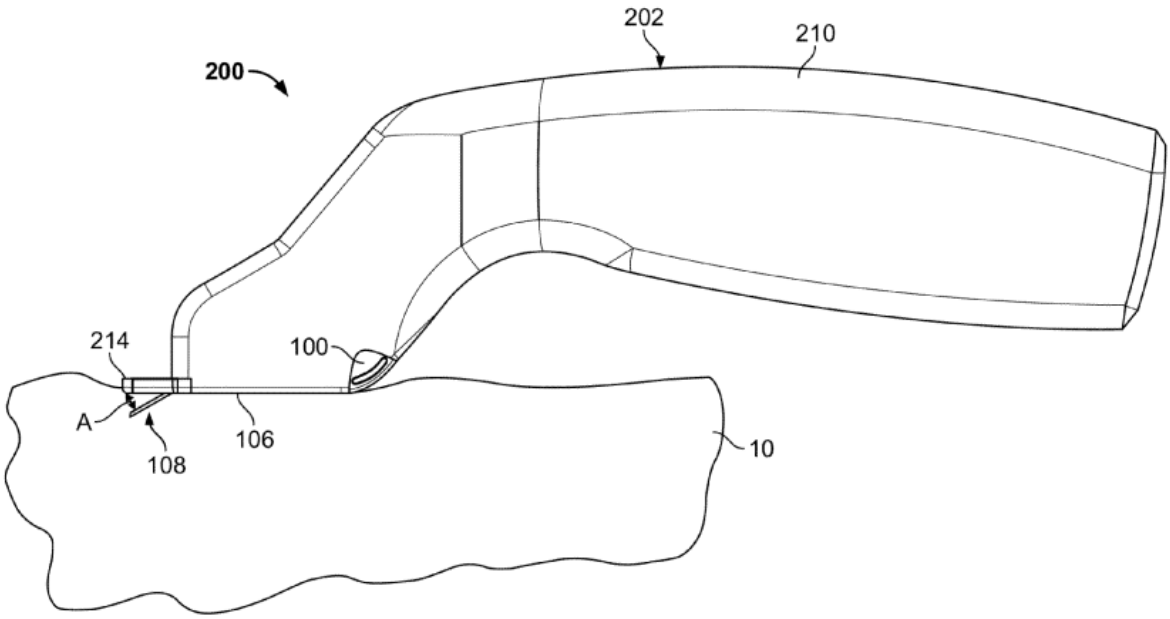

FIG. 2B

55. Mehta uses the terms "needles," "electrodes," and "probes" interchangeably. *Id.*, 9:41–55 ("The term probes 104…is intended to include any electrode, energy transfer element…or source of therapeutic treatment."), 12:54–58 ("The stabilization surface…can also be used to hold and therefore tension the skin at the insertion points to facilitate the needle insertion in the skin"), 14:13–19 ("the cartridge assembly places the probes 104 in an array 108…to provide the probes 104 on a probe assembly 102"), 15:42–49 ("electrode assembly 102 includes any

number of electrodes that form an array 108"), 17:6–8 ("needle assembly 102"). The needles or probes 104 of the device described in Mehta are extendable and retractable from a surface of the device, and may be arranged on or in a changeable cartridge in the device. *Id.*, 3:63–5:2, 4:66–5:2, 6:53–54, 9:41–43, 9:51–55, 15:42–49, 16:19–22, Figs. 2A, 2B, 2D, 4A.

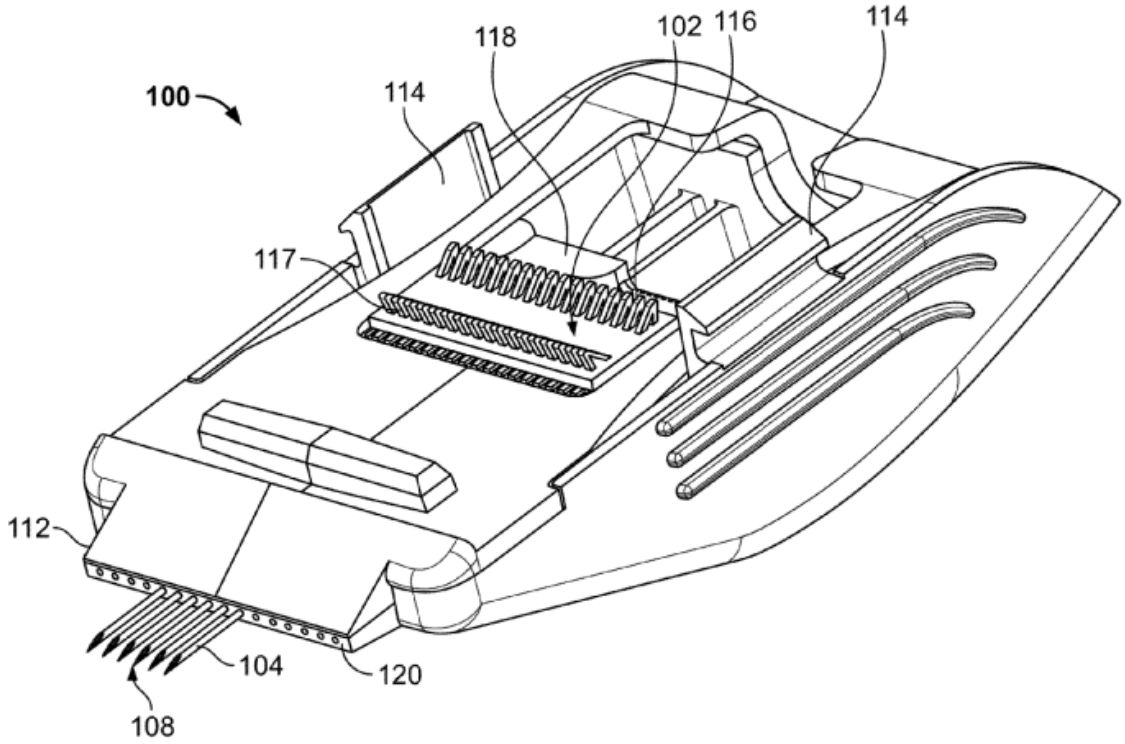

FIG. 4A

56. The microneedling device of Mehta includes an energy supply unit 90, which may not only power actuators of the device, but also provide energy that is delivered to a patient's tissue via needles 104. *Id.*, 10:38–39, 10:23–55, 11:14–15. The energy supply unit 90 can be an RF energy unit that RF energy through the needles 104 that is then applied to a patient's tissue. *Id.*, 2:63–3:17, 11:33–35, 20:16–19. The RF energy can be delivered continuously or in pulses with a pulsed

duty cycle that allows for improved temperature measurements in periods between pulsed energy deliveries. *Id.*, 11:60–20:16–47. The energy supply unit 90 can also be used to supply power necessary to provide or remove thermal energy, ultrasound energy, microwave energy, laser energy, pulsed light energy, infrared energy, and combinations thereof. *Id.*, 11:14–20.

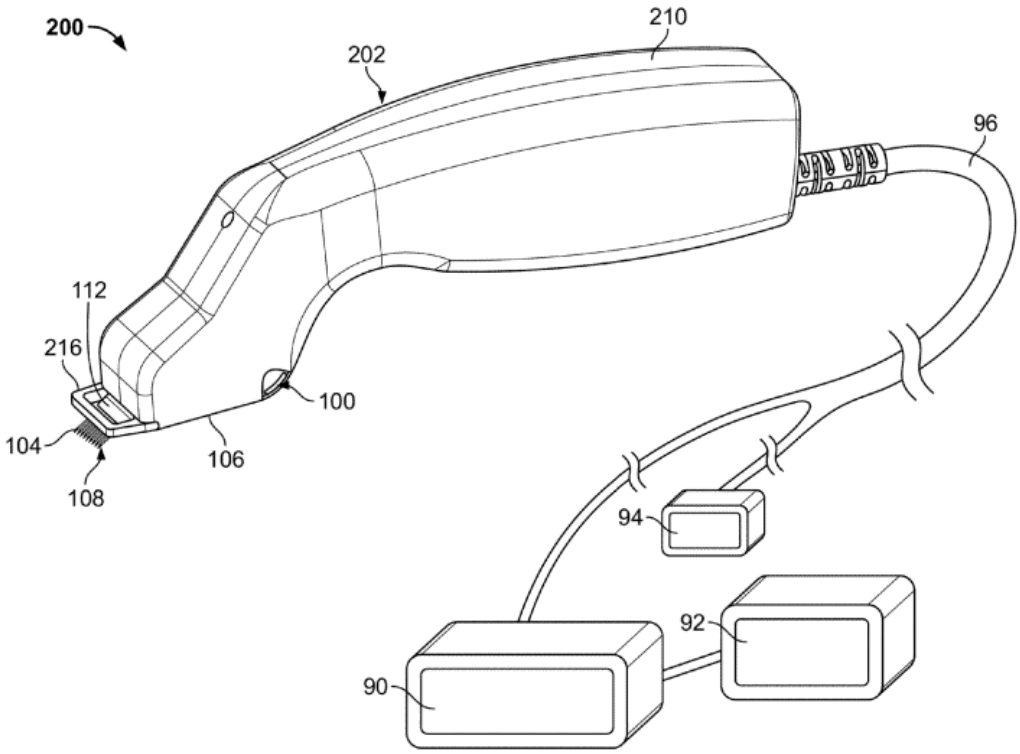

FIG. 2A

57. Mehta was not considered by the Examiner during prosecution of the applications leading to the ’812 patent. Ex-1001, 1–2. I understand that U.S. Patent No. 8,540,705 to Mehta was cited on the face of the ‘812 patent but not cited or discussed by the Examiner during prosecution of the ’812 patent. *See* Ex-1001, 2. Although there is some overlap between the disclosures of Mehta and those of

Mehta'705, the latter omits key material relevant at least to the disputed "desired distance" limitations. For example, whereas Mehta describes "further advancement" of the needles—making clear that the physician can extend the needles of Mehta to varying degrees, as discussed further below—and that the "system described [in Mehta] can be adjusted to guide probe placement" to the desired target layer of tissue, Ex-1006, 33:21–34, those statements are absent from Mehta'705, see generally Ex-1011.

B. Na'848 (Ex-1007)

58. Na'848 is a WIPO patent publication that published on February 11, 2010. Ex-1007, Title Page. It is my understanding that Na'848 qualifies as prior art at least under pre-AIA 35 U.S.C. § 102(b).

59. Much of Na'848 is identical or substantially identical to portions of the '812 Patent. For example, Paragraphs [0002]–[0059] and Figs. 1–8 of Na'848 are substantially identical to cols. 1:31–9:39, cols. 14:35–15:45 and Figs. 1–8 of the '812 patent. The claims of Na'848 also have substantial overlap with the claims of the '812 patent.

60. Cols. 9:40–14:34 and Figs. 9A–12 of the '812 patent contain matter which was not described or illustrated in Na'848. It is my understanding that the subject matter described in cols. 9:39–14:34 and illustrated in Figs. 9A–12 of the '812 Patent thus contains new matter relative to Na'848. It is also my

understanding that Na'848 was not considered as prior art during examination of the application that was the basis for issuance of the '812 Patent.

C. Lee (Ex-1008, Ex-1009)

61. Lee is a Korean registered utility model that published on August 25, 2008. Ex-1009, Title Page. Thus, Lee qualifies as prior art under at least under pre-AIA 35 U.S.C. § 102(b). Lee teaches a microneedling treatment device for cosmetic treatment, and specifically, a device in which "depth-controllable insertion of microneedles" is provided for. *Id.*, Abstract, cl. 1.

62. Lee discloses a skin treatment device that uses microneedles. *Id.*, <13> ("The present invention relates to a skin regeneration apparatus capable of controlling the insertion depth of microneedles and, more particularly, to a skin regeneration apparatus capable of controlling microneedles that can provide effective multi-hole treatment as well as safety and precision as to the depth of microneedles by making it possible to automatically control the insertion depth of the microneedles during multi-hole treatment.").

63. Lee discloses inserting the needles into skin to create perforations. *Id.*, <15> ("In this method, for example, hundreds to tens of thousands of tiny holes are created on the human skin to regenerate tissues by using its self-healing ability to heal the skin that is damaged in the process of making the tiny holes").

64. Lee discloses an actuator and mode switch to control the precise insertion depth of the microneedles. *Id.*, <44> ("the present invention provides an actuator means that can control the insertion depth of the microneedles"); *Id.*, <33> ("Pressing the mode switch changes the mode. The selected mode controls the speed of reciprocating insertions (number of repetitive insertions) and the insertion depth of the needles.").

D. Livneh (Ex-1010)

65. Livneh is a WIPO patent publication that published on January 10, 2008. Ex-1010, Title Page. Thus, Livneh qualifies as prior art at least under pre-AIA 35 U.S.C. § 102(b). Livneh also teaches a microneedling treatment device that include a plurality of needles for applying a combination of thermal and mechanical treatment to a patient's skin. *Id.*, ¶¶4-8.

66. Livneh discloses a skin treatment device that uses radio frequency (RF) electrodes. *Id.*, ¶2 ("This invention relates to an apparatus and method for skin tightening. More specifically, the present invention provides an apparatus and method for introducing thermal and mechanical injury to skin via electrodes carrying an electric current."), ¶32 ("The apparatus 30 is capable of delivering electrical current to skin using a plurality of electrodes 32 which enter the skin. Preferably, the apparatus 30 is utilized in skin tightening procedures."), ¶39 ("Specifically, in bipolar operation, as shown in Figure 1, the RF signal is applied

through a first set 54 of the electrodes 32 and utilizes a second set 56 of electrodes 32 as a return path to the power supply 50."). Livneh discloses that its device "creates mechanical and thermal injuries to the skin." *Id.*, ¶60. "As these injuries heal, the effect is tightening of the skin, which is normally perceived to be the appearance of younger and tighter skin." *Id.*

67. For the RF signal, Livneh discloses "a power supply 50 for supplying the electrical current to the electrodes 32." *Id.*, ¶37. "Preferably, a cable (not shown) or other electrical connection allows transmission of the RF signal from the power supply 50 in the control unit 48 to the electrodes 32 in the handheld unit 34." *Id.* "The power supply 50 preferably converts commercial AC electrical power, e.g., a 120 volt, 60 hertz signal, to a radio frequency (RF) signal, i.e., an AC signal operating at a radio frequency." *Id.*

VIII. CLAIMS ANALYSIS

A. Ground I: Claims 1–3, 6, 8, and 12–16 Are Anticipated by Mehta

68. In my opinion, Mehta anticipates claims 1–3, 6, 8, and 12–16 of the '812 Patent.

1. Independent Claim 12

69. As discussed in more detail below, Mehta discloses each and every element of independent claim 12. Therefore, Mehta anticipates claim 12 of the '812 patent.

a) [12pre] An apparatus for treating dermatological tissue, comprising:

70. Mehta discloses a microneedling device (*i.e.*, apparatus) for treating dermatological tissue to, for example, enhance the appearance of a patient's skin. *See*, *e.g.*, Ex-1006, 2:37–43. Microneedling treatment devices, like that described by Mehta, both (i) trigger the skin's natural healing response to stimulate collagen production and (ii) percutaneously deliver energy to cause contraction of existing collagen tissue in the skin's dermis. The result of a microneedling treatment provided by such devices is tightened and rejuvenated skin that has fewer visible fine lines and wrinkles.

71. Mehta teaches devices and methods to "treat cosmetic conditions affecting the skin of various body parts." Ex-1006, 1:14–19. Mehta's devices and methods target specific layers of the skin for treatment. *See*, *e.g.*, *id*., 8:45–48 ("[W]hen applying cosmetic treatment to the skin for tightening or removal of wrinkles, it is desirable to deliver energy to the dermis."); *see also id*., 2:37–62, 3:42–56, 5:3–6, 7:52–59, 19:17–19, 24:46–47. Treatment of the skin—and specific layers thereof—constitutes treatment of dermatological tissue.

72. Accordingly, Mehta discloses [12pre], *i.e.*, an apparatus for the treatment of dermatological tissue.

b) [12a] a user holdable device including a proximal end and a releasably couplable deployable needle module, the releasably couplable deployable needle module mechanically separatably from the user holdable device proximal end and including a needle assembly including a plurality of needles,

73. The microneedling apparatus disclosed by Mehta includes a handpiece with a handle that is designed to be grasped by a user, *e.g.*, an aesthetician or dermatologist, during treatment of a patient's skin. *See*, *e.g.*, Ex-1006, 4:1–2, 9:34–39, 9:59–62. In addition, the microneedling apparatus disclosed by Mehta includes a removable cartridge having needles that are designed to penetrate a patient's skin and apply subcutaneous treatments thereto. *See*, *e.g.*, *id.*, 4:63–5:2; 9:40–64.

74. Mehta illustrates a microneedling apparatus, *i.e.*, "treatment system 200," in Fig. 2A.

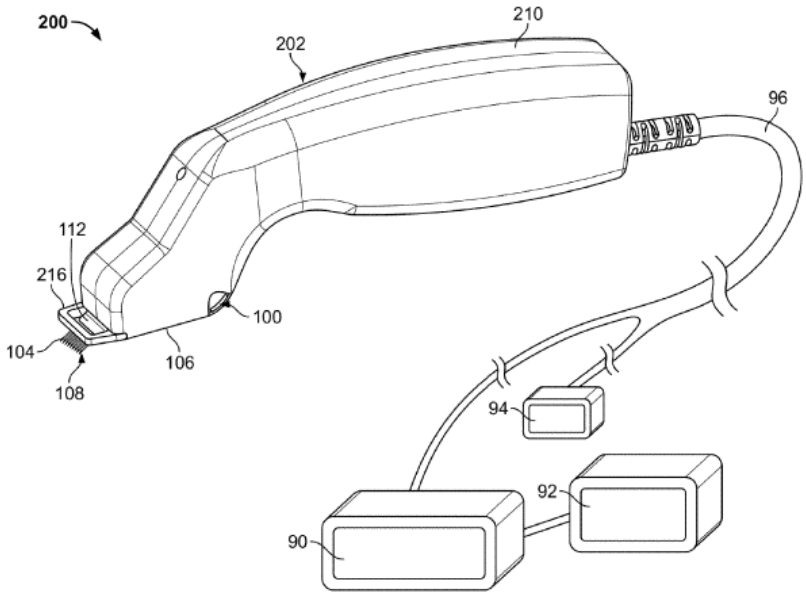

FIG. 2A

Mehta—Fig. 2A

The microneedling apparatus 200 includes "a treatment unit 202 having a hand-piece or device body 210," which "facilitates…grasp[ing] by the hand" of a user, and "a plurality of retractable probes 104" that "are coupled to the body 210 via a removable cartridge 100." *Id*., 9:36–43, 9:56–64. During the application of treatment to a patient's dermatological tissue, the treatment unit 202 is held, at the handpiece/device body 210, by a user (e.g. and aesthetician or dermatologist). *See id*., 2:37–41, 9:56–64. Accordingly, the treatment unit 202 is a "user holdable device" as recited by claim 12 of the '812 patent.

75. The microneedling treatment unit 202 includes a portion (designated by the red box in Fig. 2B of Mehta, reproduced below) that is designed to be positioned proximal to a patient's dermatological tissue, *i.e.*, tissue 10, during treatment.

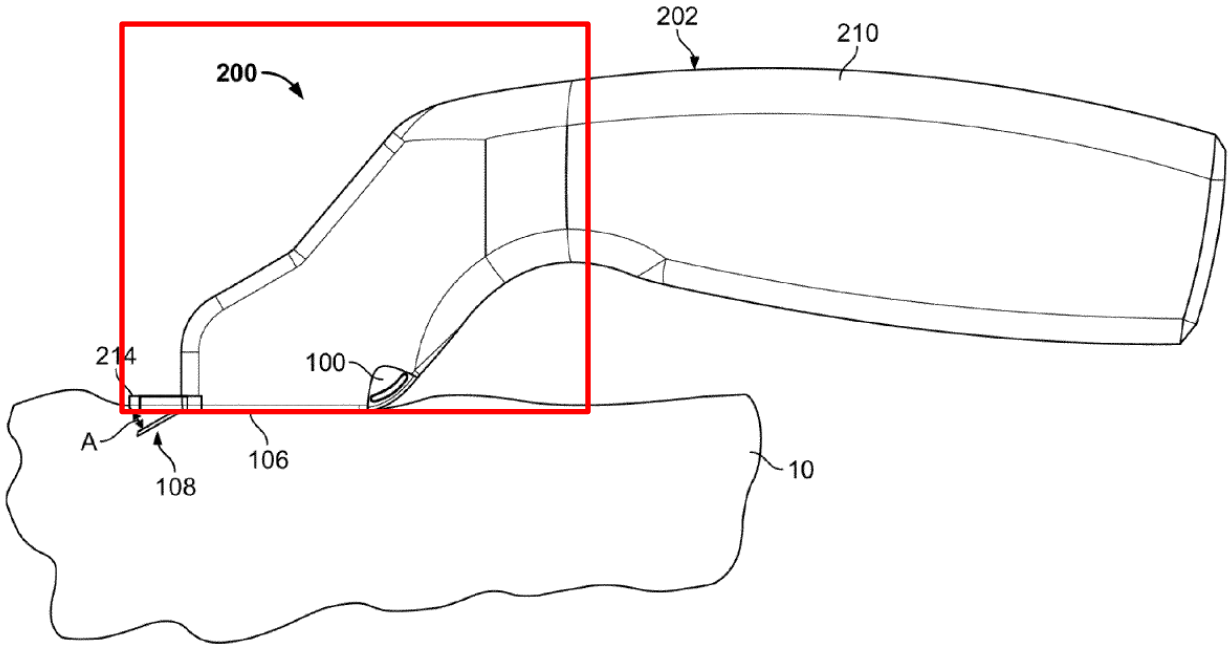

Mehta—Fig. 2B

Specifically, during treatment of a patient's dermatological tissue (*e.g.*, skin on a patient's face or neck), a user would hold the handle portion, which is located at the right-hand side of the treatment unit 202 in Fig. 2B of Mehta, and position the proximal end of the microneedling treatment unit 202 near the dermatological tissue to be treated such that a tissue engaging surface 106 engages the dermatological tissue near a treatment region. *See, e.g.*, *id.,* 12:23–30. Accordingly, the treatment unit 202 includes a "proximal end" as recited by claim 12 of the '812 patent.

76. The microneedling treatment unit 202 also includes a cartridge 100 that has a needle assembly 102 with a plurality of microneedles 104 designed to penetrate a patient's skin and apply subcutaneous treatments thereto. *See id*., 9:40–43, 14:15–19. Fig. 2D of Mehta illustrates the microneedling treatment unit 202 with the cartridge 100 mechanically separated from the device body 210. *See id*., 14:5–7.

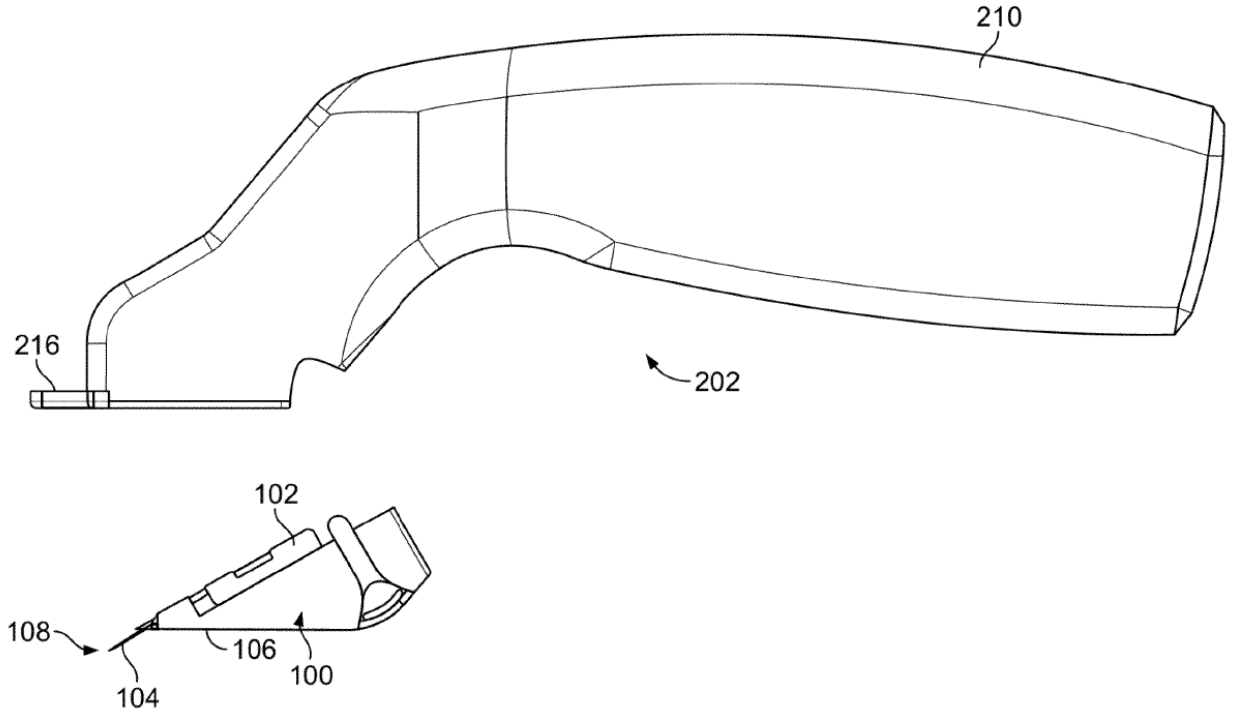

Mehta—Fig. 2D

Mehta interchangeably refers to elements 104 as "probes," "electrodes," and "needles" (*see*, *e.g.*, *id*., 9:41–55, 12:47–58, 21:34–38, 31:37–41, 37:7–16). Likewise, Mehta refers to the same assembly 102 as a probe assembly 102 (*see*, *e.g.*, *id*., 14:15–19), an electrode assembly 102 (*see*, *e.g.*, *id*., 15:34–36 and 15:42–49), and a needle assembly 102 (*see*, *e.g.*, *id*., 17:6–8). Mehta also repeatedly indicates that the term "needles" is intended to be interchangeable with "electrodes" and "probes." *See*, *e.g.*, *id*., 17:6–12 ("upon distal advancement of the needle assembly 102 . . . the temperature of the electrodes can be continuously monitored"), 40:45–51 ("[w]hen used with a bi-polar RF energy modality, the use of minimally invasive micro-needle electrode pairs appears to have several clear

advantages"), 31:37–41 ("[w]hen more than 2 needles/probes have been placed in the tissue, sensing can be done between any two needles/probes to determine the tissue properties therebetween"). Moreover, Mehta states that "the term probe shall be used to refer to any electrode, energy transfer element or source of therapeutic treatment unless specifically noted otherwise," and "is intended to include any electrode, energy transfer element (*e.g.*, thermal, electrical, electromagnetic, microwave, mechanical, ultrasound, light, radiation, monopolar RF, bipolar RF, chemical, radioactive, etc.), or source of therapeutic treatment." *Id*., 9:43–51. Furthermore, the dermatological treatment device described by Mehta is a type of device commonly known in the skincare field as a "microneedling" device, and a POSA would have understood that the elements designated by reference numeral 104 throughout Mehta are needles—regardless of whether or not they are referred to as "probes" or "electrodes."

77. In microneedling devices that include detachable cartridges, like the microneedling treatment unit 202, a user (*e.g.*, an aesthetician or dermatologist) can customize the treatment provided by the microneedling device by selecting a particular cartridge with a particular microneedle configuration from a set of different cartridges having different microneedle configurations. *See*, *e.g.*, *id*., 9:40–55, 9:65–10:32. To fit a particular cartridge 100 to the proximal end of the handpiece/device body 210, Mehta teaches that "any number of structures can be

incorporated into the device to permit removable coupling of the cartridge body 100," for example, "retention fasteners 114 allowing for coupling with the device body as well as removal from the device body." *Id*., 15:27–33. An example of retention fasteners 114 is provided in Fig. 4A of Mehta, reproduced below.

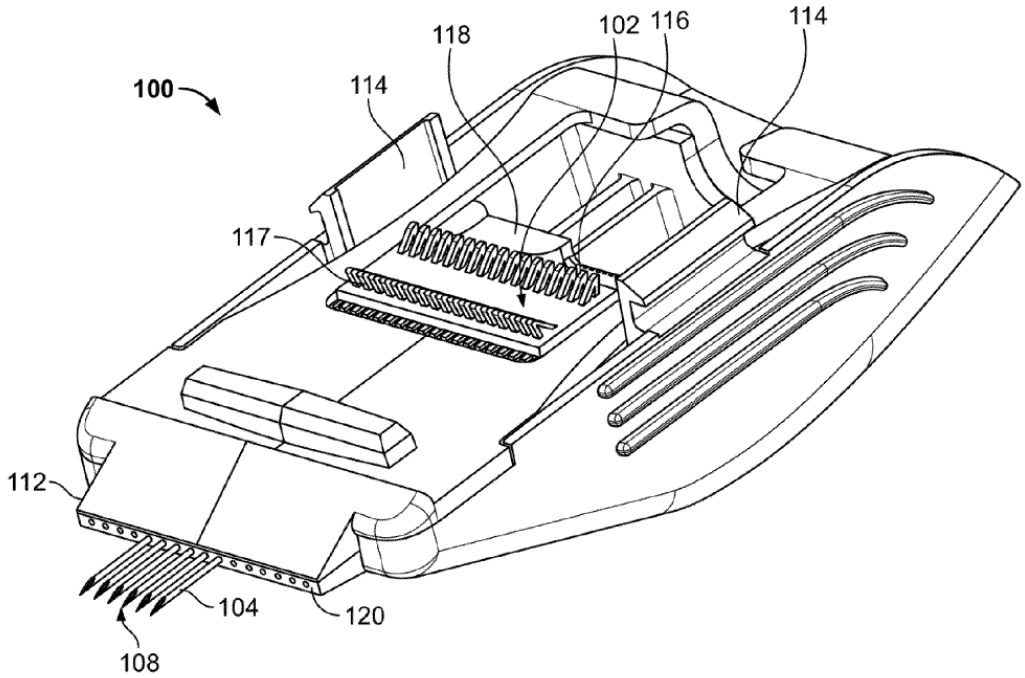

Mehta—Fig. 4A

Because the cartridge 100 can be attached, or coupled, to and detached, or removed, from the handpiece/device body 210—*e.g.*, via the action of retention fasteners 114, the cartridge 100 is "releasably couplable" to the proximal end of

the device body 210. *See, e.g.*, *id*., Figs. 2B, 2D, 4A[3] and 3:63–64, 6:41–42, 14:5–7, 15:28–33. Accordingly, the cartridge 100 of Mehta is a "releasably couplable deployable needle module" that is "mechanically separatable from the proximal end," as recited by claim 12 of the '812 patent.

78. Mehta discloses a needle assembly 102 (colored in yellow in Fig. 4C, reproduced below) included in the cartridge 100.

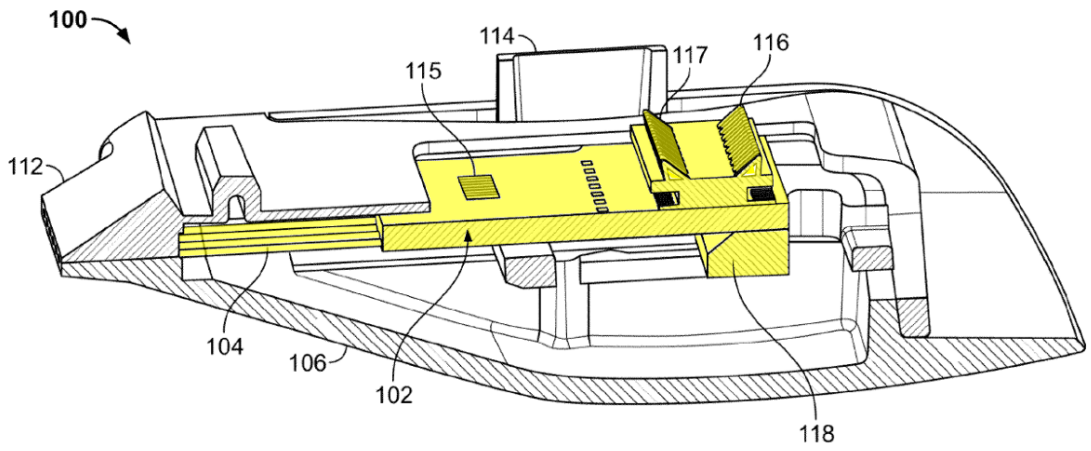

Mehta—Fig. 4C (annotated)

[3] Figs. 2A–2B of Mehta depict a system 200 generally, and Figs. 4A–4F and 7A–7E depict components included in that system 200 (e.g. in different variations thereof). Ex-1006 at 6:51-62, 7:1-12. For example, Fig. 4A depicts an exemplary implementation of a cartridge 100 that may be incorporated into the system 200 of Figs. 2A–2D, and Fig. 7A depicts a side view of how needles 104 of the cartridge 100 of Figs. 2A–2D would enter human tissue. Mehta also states "[i]t is expressly intended that, wherever possible, the invention includes combinations of aspects of the various embodiments described herein or even combinations of the embodiments themselves." *Id.* 6:3-6.

The needle assembly 102 includes at least a plurality of needles 104, connection portions 116, 117, and a coupling portion 118. *See, e.g.*, *id.,* 9:40–55 ("the removable cartridge 100 contains a plurality of retractable probes 104 arranged in an array 108"), 15:40-42 ("the electrode assembly 102 can include a coupling portion or structure 118"), 15:45–49 ("The electrode assembly 102 includes any number of electrodes 104"), 16:65–66 ("the electrode assembly 102 can have multiple connection portions 116, 117 per individual electrode"). Accordingly, the removable cartridge 100/needle assembly 102 of Mehta form a "releasably couplable deployable needle module…including a needle assembly including a plurality of needles," as recited by claim 12 of the '812 patent.

79. Accordingly, Mehta discloses a user holdable device (*i.e.*, the treatment unit 202) including a proximal end (*i.e.*, a portion of the device body 210 proximal to a patient's tissue 10) and a releasably couplable deployable needle module (*i.e.*, removable cartridge 100), the releasably couplable deployable needle module mechanically separable from the user holdable device proximal end and including a needle assembly (*i.e.*, needle assembly 102) including a plurality of needles (*i.e.*, needles 104). Therefore, Mehta discloses [12a].

c) [12b] the needle assembly movable within the releasably couplable deployable needle module to extend the plurality of needles from the releasably couplable deployable needle assembly end surface

80. The microneedling apparatus disclosed by Mehta includes a plurality of needles that extend into a patient's skin and provide for percutaneous delivery of electromagnetic energy to dermatological tissue. *See*, *e.g.*, *id.,* 2:37–43. In the microneedling apparatus of Mehta, the microneedles are extendable from a fully retracted position and from a front portion of a removable cartridge. *See*, *e.g.*, *id*. 14:14–19, 15:45–49, 16:19–22.

81. Mehta discloses a needle assembly 102, having a plurality of needles 104, that is "slidable relative to the cartridge body 100 and the device body 210" to enable the needles 104 to "be driven into tissue." Ex-1006, 14:14–19. The removable cartridge 100 includes "channels 120…to support and guide" the needles "as they advance and retract relative to the cartridge 100." Ex-1006, 16:19–22. As the needle assembly 102 slides relative to the cartridge body, the needles 104 move between an extended position and a retracted position.

82. Because the needle assembly 102 is part of the cartridge 100 (*supra* Section VIII.A.1.b)), when the cartridge 100 (*i.e.*, needle module) is released and removed from the proximal end of the device body 210, the needle assembly 102 is also released and removed. Conversely, when the cartridge 100 (*i.e.*, needle module) is coupled to the proximal end of the device body 210, the needle

assembly 102 is also coupled to the proximal end of the device body 210. Accordingly, the needle assembly 102 of Mehta is a "releasably couplable deployable needle assembly."

83. Fig. 4C of Mehta (reproduced below) illustrates the cartridge 100 with the needle assembly 102—and therefore the needles 104—in a retracted position. *See* Ex-1006, 16:59–60.

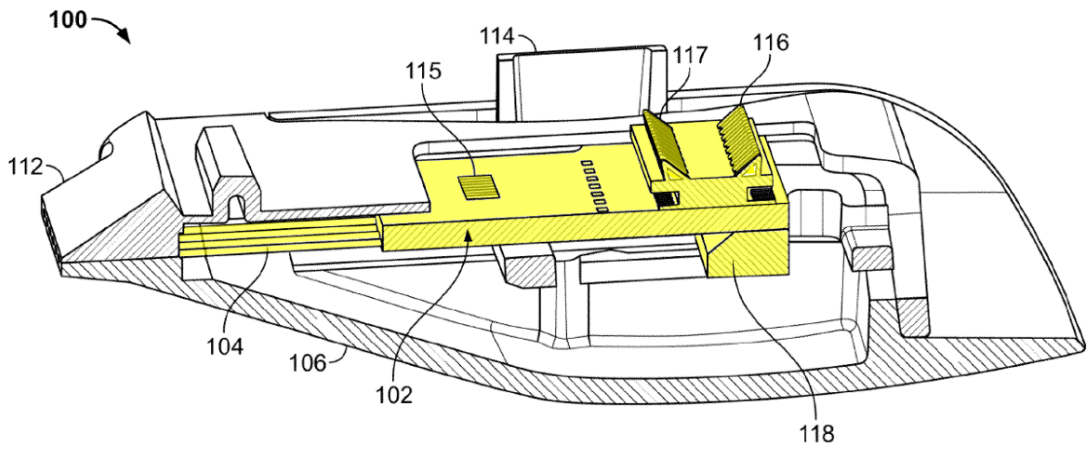

Mehta—Fig. 4C (annotated)

84. As discussed *supra* Section VI.E.2, the term "a deployable needle assembly end surface" has been construed in the ITC Lawsuit—in a manner consistent with the meaning that term would have had to a POSA—to mean:

> The deployable needle assembly end surface is the plane defined by the tips of the needles of the deployable needle assembly when the needles are not extended, the needle assembly can be movable within a needle module that is releasably couplable to the proximal end of a user holdable device.

Ex-1005, 16–26. The definition of "deployable needle assembly end surface" provided in the ITC Lawsuit corresponds to the retracted tip plane, *i.e.*, the plane that extends along the tips of the needles when they are in the retracted position. *Supra* VI.E.2. When the needle assembly 102 is in the fully retracted position, the tips of the needles 104 define a retracted tip plane, *i.e.*, a plane that extends along the tip of each of the retracted needles. In Fig. 4C, that plane may correspond to the front portion 112 of the cartridge 100, or that plane may lie behind the front portion 112 of the cartridge.

85. Fig. 4A of Mehta (reproduced below) illustrates the removable cartridge 100 with the needle assembly 102 in an extended position.

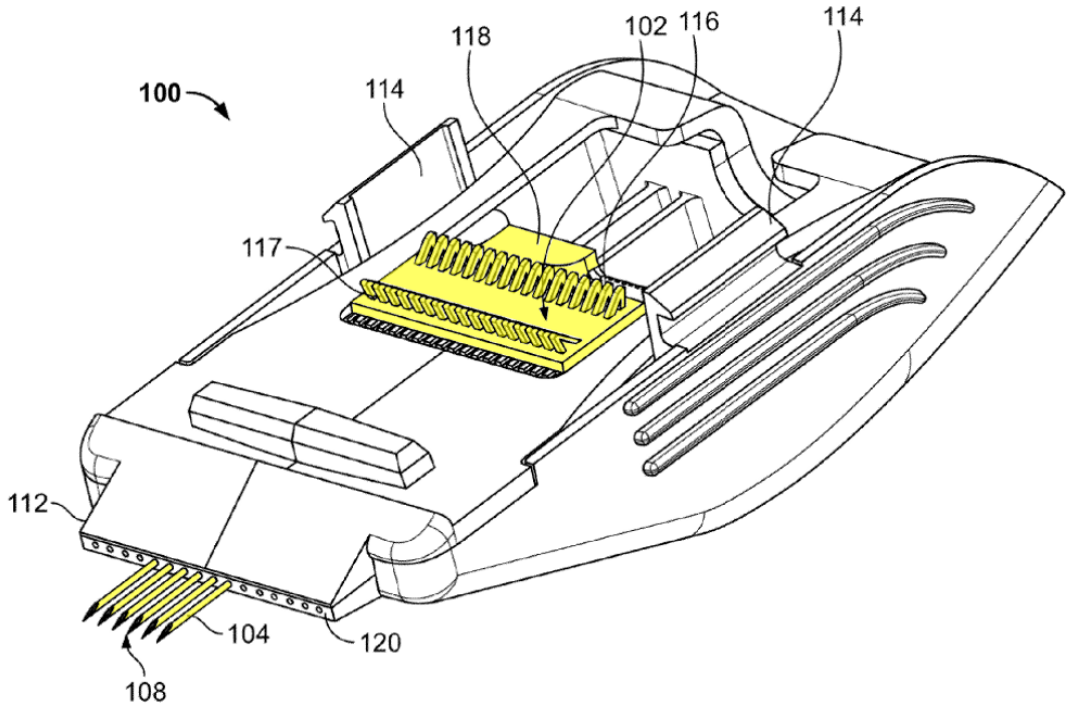

Mehta—Fig. 4A (annotated)

As illustrated in Fig. 4A, when the needle assembly 102 (colored in yellow) is in the extended position, the needles 104 extend from both (i) the retracted tip plane, *i.e.*, the plane that extends along the tips of the needles when they are in the retracted position, and (ii) the front portion 112 of the cartridge 100. Because the needles 104 are extendable from the retracted tip plane, as evidenced by Figs. 4A and 4C of Mehta, the needles 104 are "extendable from the . . . deployable needle assembly end surface," as recited by claim 12 of the '812 patent. Furthermore, as can be seen in Fig. 4A of Mehta, the needles 104 are also extendable from the front portion 112 of the cartridge 100.

86. Accordingly, Mehta discloses the needle assembly 102 movable within the releasably couplable deployable needle module (*i.e.*, the removable cartridge 100) to extend the plurality of needles from the releasably couplable deployable needle assembly end surface (*i.e.*, the retracted position tip plane).

d) [12c] while at least one electrical contact of the needle assembly remains electrically coupled to at least one electrical contact of the user holdable device proximal end.

87. In the microneedling apparatus of Mehta, an electrical pathway is provided for transmitting electrical power from a power supply to the needles, *i.e.*, needles 104. *See*, *e.g.*, Ex-1006, 15:55–59. Because (i) the needles 104 are part of a needle assembly 102 that is a component of the removable cartridge 100 (*see*, *e.g.*, Ex-1006, 9:40–43, 14:15–19) and (ii) the power supply is either connected to the

handpiece/device body 210 via a cable 96 or provided in the handpiece/device body 210 itself (*see*, *e.g.*, Ex-1006, 9:40–43, 10:53–65), the electrical pathway between the power supply and the needles extends across the interface between the removable cartridge 100 and the handpiece/device body 210 in order for electrical power to be delivered from the power supply to the needles to deliver electrical energy (*e.g.*, RF energy) or to measure temperature or impedance of the skin tissue. *Infra* Section VIII.A.6.f). Accordingly, there must be at least one electrical contact (or a set of electrical contacts) disposed on the removable cartridge 100/needle assembly 102 and at least one electrical contact (or a set of electrical contacts) disposed on the handpiece/device body 210 such that, when the removable cartridge 100 is coupled to the handpiece/device body 210, at least one electrical contact of the needle assembly remains electrically coupled to at least one electrical contact of the user holdable device proximal end.

88. Mehta discloses a set of electrical contacts, which are located on the removable cartridge 100 (specifically on needle assembly 102) at its interface with the proximal end of the handpiece/device body 210, provided in the form of a spring contact or spring pin. *See*, *e.g.*, Ex-1006, 16:12–18. Specifically, Mehta teaches that the needles 104 of the needle assembly 102 of the removable cartridge 100 have "contact portions 116," which "comprise spring contacts or spring pins," and "couple to a connection board on a treatment unit to provide an electrical

pathway from the power supply" to the needles 104. Ex-1006, 15:55–59 and 16:12–18. Fig. 4A of Mehta (reproduced below) illustrates the contact portions 116 in the form of spring contacts or spring pins.

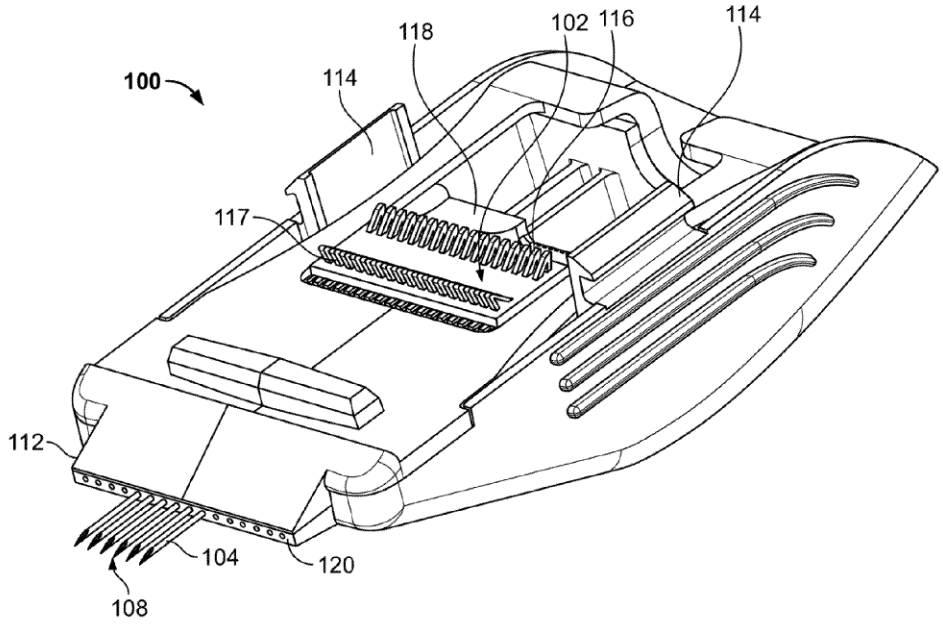

Mehta—Fig. 4A

Mehta discloses that "the connection portions 116 can maintain contact with a corresponding contact point trace on a connection board during movement" of the needle assembly 102. Ex-1006, 16:15–18. Because (i) the contact portions 116 protrude from the top side of cartridge 100 and (ii) the top side of cartridge 100 interfaces with the proximal end of handpiece 210 when the cartridge 100 is coupled thereto, the "corresponding contact point trace" is "at least one electrical contact" included on "the proximal end" of the handpiece/device body 210, as recited by claim 12 of the '812 patent.

89. As noted *supra* ¶87, in order for an electrical pathway that provides for transmission of electrical power from the power supply to the needles, there must be at least one electrical contact (or a set of electrical contacts) disposed on the handpiece/device body 210 such that, when the removable cartridge 100 is coupled thereto, said at least one electrical contact (or a set of electrical contacts) contacts a corresponding at least one electrical contact (or a set of electrical contacts) disposed on the needle assembly. Thus, in the case of the contact portions 116 disposed on the needle assembly 102, there must be one or more corresponding electrical contacts disposed on the handpiece/device body 210 configured to electrically contact the contact portions 116. The corresponding one or more electrical contacts are "at least one electrical contact" as recited by claim 12 of the '812 patent. Furthermore, because the removable cartridge 100 couples to the proximal end of the handpiece/device body 210, the interface between the removable cartridge 100 and the handpiece/device body 210 is located at the proximal end of thereof, the corresponding at least one electrical contact is included on the proximal end of the handpiece/device body 210.

90. Accordingly, Mehta discloses at least one electrical contact (*i.e.*, at least one electrical contact to which one or more of the contact portions 116 are couplable) of the needle assembly (*i.e.*, needle assembly 102) remains electrically coupled (via the contact portions 116) to at least one electrical contact of the user

holdable device proximal end (*i.e.*, the device body 210). Therefore, Mehta discloses [12c].

* * *

91. For the foregoing reasons (*supra* Sections VIII.A.1.a)–VIII.A.1.d)), Mehta anticipates claim 12.

2. Dependent Claim 13

92. Claim 13 recites the apparatus of claim 12, "further including a motor coupled to the needle assembly to extend the plurality of needles a desired distance from the releasably couplable deployable needle assembly end surface when the motor is energized with a particular signal." In my opinion, Mehta discloses the additional limitation of claim 13 of the '812 patent. Therefore—and for the reasons set forth *supra* Section VIII.A.1—Mehta anticipates claim 13.

93. In the microneedling apparatus of Mehta, a motor is provided that couples to the needle assembly 102 in order to slide the needle assembly towards a front portion 112 of the cartridge 100 and thereby cause the needles 104 of the needle assembly 102 to extend from the front portion of the cartridge 100 or the retracted tip plane. Section VIII.A.1.c); *see also*, *e.g.*, *id.*, Figs. 4A, 4C, 14:14–18, 15:34–40, 16:19–22, 16:59–64, 18:21–37. The motor is controlled by a control system. *See*, *e.g.*, *id.*, 10:38–39.

94. Mehta discloses "a moveable actuator 250" which can be provided in

the form of "any number of actuation means, including, but not limited to, pneumatic cylinders, springs, linear actuators, *or other such motors*." Ex-1006, 18:34–37 (emphasis added). Accordingly, Mehta discloses an actuator provided in the form of a motor. Mehta further discloses that "movement of the actuator causes advancement or retraction of the first plurality of electrodes" (*id.,* 5:1–2), and "[t]he mode of movement of the actuator can include…sliding, rotation, incremental indexing (via a ratchet-type system), [and] stepping (via an [*sic*] step-motor)" (*id.*, 15:36–40). Mehta further teaches that the "motor…provides sufficient force, speed or impact to" the needles "to drive them into tissue" (Ex-1006, 13:63–65), and that the motor "moves the shaft 256 where an engagement portion 252 on the shaft couples to" the needle assembly 102 "via a coupling portion 118 . . . to advance and retract" the needles. Ex-1006, 18:26–30. The actuator 250 and the shaft 256 are illustrated in Fig. 5 of Mehta (reproduced below).

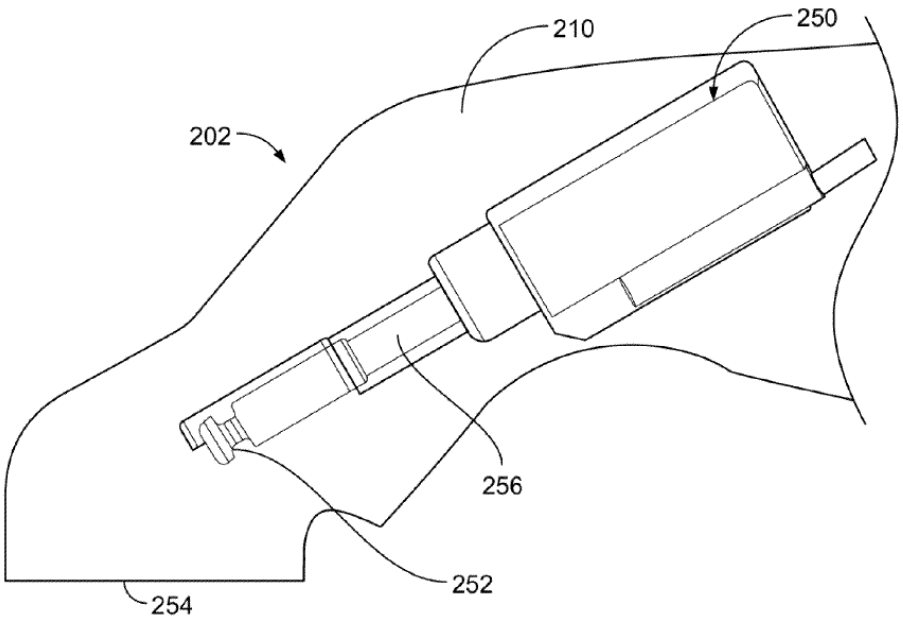

Mehta—Fig. 5[4]

The coupling portion 118 is illustrated, *e.g.*, in Fig. 4A of Mehta (reproduced below).

[4] Mehta describes Fig. 5 as illustrating "a cross sectional view of a distal end of a variation of treatment unit." Ex.1006, 6:63-64; *see also id.*, 18:21-23. However, Mehta uses the terms "proximal" and "distal" with reference to a user of the device. *See*, *e.g.*, *id.*, 4:35-43, 6:63-65, 9:62-64, 18:21-23, 35:8-10, Figs. 3A, 3B, 5, 12A, 12B. Accordingly, the "distal end" referred to by Mehta is an end of the handpiece 210 that is proximal to dermatological tissue to be treated, *i.e.*, the proximal end recited by the claims of the '812 patent.

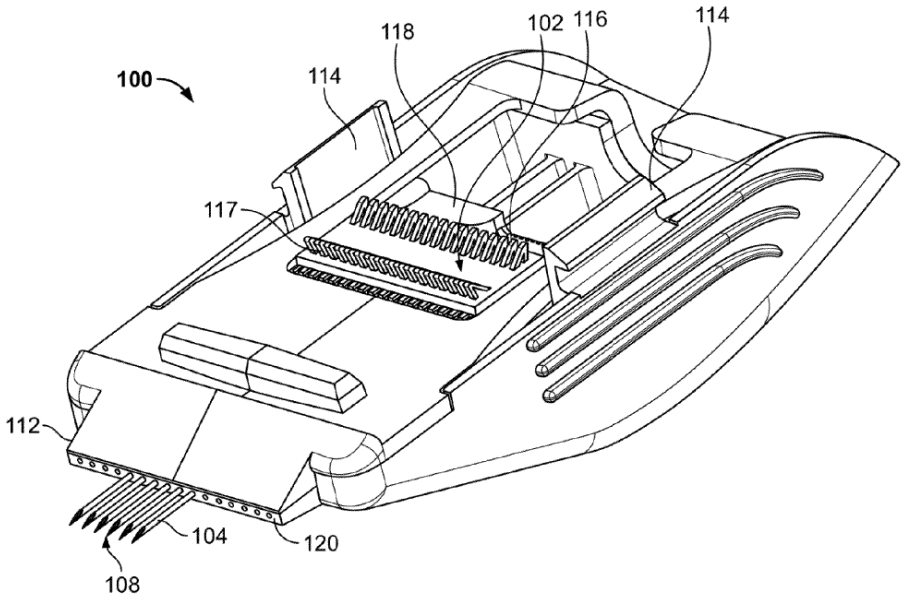

Mehta—Fig. 4A

Accordingly, Mehta discloses a motor (*i.e.*, the actuator 250) coupled (via the shaft 256, the engagement portion 252 of the shaft, and the coupling portion 118 of the needle assembly 102) to the needle assembly 102.

95. Mehta also discloses the motor to extend the plurality of needles a desired distance from the releasably couplable deployable needle assembly end surface. The distance by which the needles extend from the needle assembly end surface can be selected by a user, *e.g.*, by choosing to couple a particular removable cartridge 100 having needles of a particular length to the proximal end of the handpiece/device body 210. A distance that is selected by a user is a "desired distance" that, *e.g.*, corresponds to a target tissue layer. Mehta discloses that placement of tissue engaging surface 106 on skin causes the needles to reach

"the desired depth." Ex-1006, 32:16–20. A user may select the distance by which the needles extend from the needle assembly end surface by choosing a particular removable cartridge having needles of a particular length—*e.g.*, a length that corresponds to deployment in the dermal region of a patient's tissue when fully extended from the needle assembly end surface. Mehta specifically teaches that "the system can be provided with a number of electrode cartridges…for the physician to control treatment or placement of the electrodes[, *i.e.*, needles,] by exchanging cartridges" (*id*., 17:66–18:3), that "the individual probes[, *i.e.*, needles,] 104 can have any number of shapes or profiles depending on the particular application" (*id*., 10:17–19), that "for skin resurfacing, the length…is generally selected so that the energy delivery occurs in the dermis layer of the skin 10," (*id*. 10:21–23), and that "[s]electing probes[, *i.e.*, needles,] having sufficient length to reach the subcutaneous fat layer allows for such probes[, *i.e.*, needles,] to apply energy in the subcutaneous fat layer." (*id*., 8:16–18). Mehta teaches that "a more reliable insertion" can be achieved by "[o]ver inserting and then partially retracting" the needles to the desired distance. *Id*., 16:34–41. And Mehta also indicates that a distance of needle extension can be selected by, *e.g.*, choosing an angle A (*see id.*, Fig. 2B) "between nearly 0 and 90 degrees" such that the needles 104 are inserted at "a desired location in tissue." *Id*., 12:23–46. Accordingly, Mehta discloses that the motor causes the plurality of extendable needles to extend

a desired distance from the needle assembly end surface (*i.e.*, a distance corresponding to a length of the needles of a removable cartridge selected by a user for a particular application).

96. Mehta discloses a user interface showing "depth/angle," and states that this interface can "show a desired probe [, *i.e.*, needle,] location (e.g. array 342 can represent the desired depth of placement for providing treatment)." *Id*., 32:67–33:3, Figs. 10B, 10E. In addition to showing the desired location, the user interface also shows "an actual placement of the probe[, *i.e.*, needle,] array," "probes that are not located in the target region via a specific color, flashing, or other visual indicator," and "any number of prior probe locations," *e.g.*, "in a less prominent color (*e.g.*, gray, faded, etc.) to clearly separate the previous treatment locations from the current location." *Id*., 32:52–57, 33:3–14. If a physician initially positions the needles too shallow into the tissue (*i.e.*, into a "first layer") for the intended treatment, "the physician would be informed that further advancement of the probes[, *i.e.*, needles,] is necessary to place the probes within the second layer" of tissue. *Id*. 33:24–27. Further advancement of the needles would entail a further extension thereof. In order to provide the capability of adjusting the amount of needle extension/needle insertion depth, and to provide for fine adjustments of needle position relative to previous treatment positions, Mehta provide a stepper-motor for advancing and retracting the needles 104. *See id*., 10:33–39, 12:5–8,

15:34–42, 33:30–34.

97. Mehta's motor is driven by a control system/energy supply unit. *See*, *e.g.*, *id*., 10:38–39. Mehta also teaches that the control system/energy supply unit "may also include an input/output (I/O) device that allows the physician to input control and processing variables, to enable the controller to generate appropriate command signals." *Id*., 12:5–8. Controlling the motor via a control system involves transmitting command signals from the control system to the motor, the command signals causing the motor to create a mechanical force that drives the shaft coupled to the needle assembly 102 to cause the needles 104 to extend from the needle assembly end surface. Such command signals are electrical motor control signals.

98. Stepper motors, such as the step-motor disclosed by Mehta, are electromechanical devices that convert electrical pulses into rotational motion. Unlike traditional electric motors, which spin continuously when voltage is applied, step motors move in discrete steps. Each step corresponds to a specific angular displacement, and the motor will move from one step to the next in response to electrical pulses. Step-motors are therefore suitable for applications where precise control of position and speed is crucial—as is the case in controlling the deployment of an array of RF microneedles. For a step-motor, like that disclosed by Mehta, the command signals are provided as electrical motor control

signals in the form of a pulse train, *i.e.*, a series of consecutive pulses. A "rotation-to-translation" mechanical conversion unit, such as a gear assembly, is used between the motor and the array of needles to obtain the desired translational movement. The rotation-to-translation mechanical conversion unit can be constructed in such a manner to provide a desired rotation-to-translation ratio, *i.e.*, to provide a desired translational motion in response to a particular rotation of the step-motor.

99. Accordingly, Mehta discloses a motor (*i.e.*, the actuator 250) coupled (via the shaft 256 and the coupling portion 118 of the assembly 102) to the needle assembly 102 to extend the plurality of needles (*i.e.*, the needles/electrodes/probes 104) a desired distance (*e.g.*, using a step-motor) from the releasably couplable deployable needle assembly end surface when the motor is energized with a particular signal (*i.e.*, an appropriate command signal from control system/energy supply unit 90). Accordingly, Mehta discloses the additional limitations in claim 13 regardless of which interpretation of "desired distance" is applied. anticipates claim 13. Therefore—and for the reasons set forth *supra* Section VIII.A.1—Mehta anticipates claim 14.

3. Dependent Claim 14

100. Claim 14 recites the apparatus of claim 13, "further including a signal generator electrically coupled to the user holdable device proximal end to energize

the plurality of needles." In my opinion, Mehta discloses the additional limitation of claim 14 of the '812 patent. Therefore—and for the reasons set forth *supra* Sections VIII.A.1 and VIII.A.2—Mehta anticipates claim 14.

101. In Mehta's microneedling apparatus, a signal generator is electrically coupled to the needles when they are extended from the needle assembly end surface and provides energy to, *i.e.*, energizes, the plurality of needles to percutaneously deliver energy to the patient's skin and thereby provide treatment. *See*, *e.g.*, Ex-1006, 2:37–62, 10:53–65, 15:55–59, 17:3–12,

102. Mehta discloses that "[t]he system 200 also includes an energy supply unit 90 coupled to the treatment unit 202 via a cable 96 or other means." *Id.,* 10:53–55. Fig. 2A of Mehta, reproduced below, illustrates the system 200—including the treatment unit 202, cable 96, and energy supply unit 90.

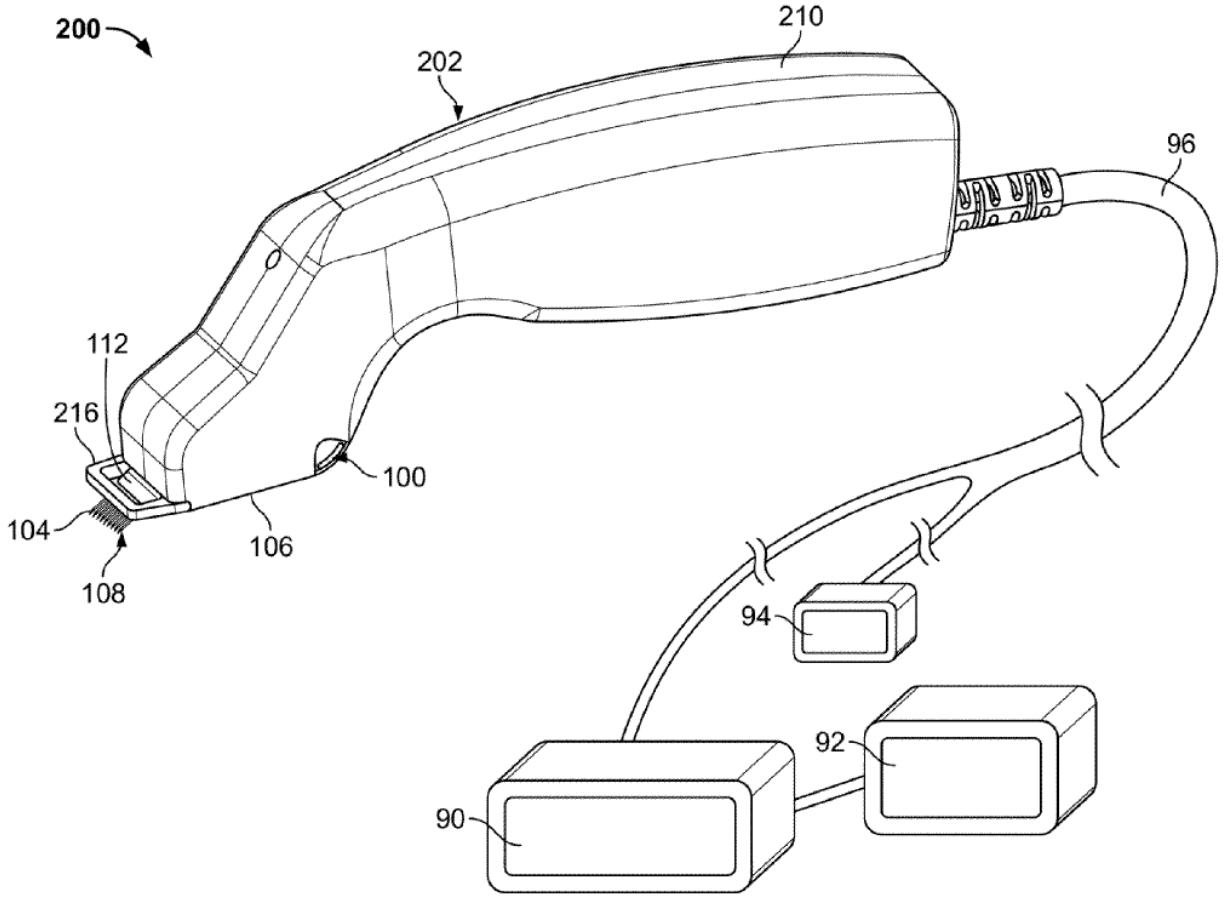

Mehta—Fig. 2A

Mehta teaches that "the energy supply unit 90 contains the software and hardware required to control energy delivery" (*id.,* 10:57–59) and that the "electrodes 104 in the electrode assembly 102" have "connection or contact portions 116 that couple to a connection board on a treatment unit to provide an electrical pathway from the power supply to the electrodes[, *i.e.*, needles,] 104" (*id.,* 15:55–59). Mehta further teaches that "in certain variations of the system, the electrodes are only coupled to the power supply when in a treatment position and are incapable of delivering energy when in a retracted position" (*id.,* 15:62–65), while in other variations "the

system can be configured so that the electrodes can be energized whether in the treatment or retracted positions" (*id.,* 16:8–11). In Mehta, the energy is delivered in the form of parameterized RF pulse signals—which are generated by the power supply. *See id*., 20:13–55. As an alternative to the externally-located energy supply unit 90 depicted in Fig. 2A, Mehta discloses that "the CPU, software and other hardware control systems," as well as "the power supply necessary to deliver treatment," may "reside in the handpiece 210." *Id.,* 10:53–65. Mehta's energy supply unit 90/power supply residing in handpiece 210 is electrically coupled to the user holdable device proximal end because (1) the cartridge 100 (including the needles) is coupled to the user holdable device proximal end and (2) the energy supply unit 90/power supply is electrically coupled to the needles 104 via an electrical pathway so that the energy generated by the energy supply unit 90 is transported to and energize needles 104. *See*, *e.g.*, Ex-1006, 15:55–59, 15:62–65, 16:8–11; *supra* Section VIII.A.1.b).

103. Accordingly, Mehta discloses a signal generator (*i.e.*, energy supply unit 90 or power supply residing in the handpiece) electrically coupled to the user holdable device proximal end (*i.e.*, of the device body 210) to energize the plurality of extended needles (*i.e.*, the probes/electrodes 104). Therefore, Mehta discloses the additional limitation of claim 14 of the '812 patent. Therefore—and for the reasons set forth *supra* Sections VIII.A.1 and VIII.A.2—Mehta anticipates

claim 14.

4. Dependent Claim 15

104. Claim 15 recites the apparatus of claim 14, "the user holdable device proximal end includes an electrical connector couplable to the signal generator." In my opinion, Mehta discloses the additional limitation of claim 15 of the '812 patent. Therefore—and for the reasons set forth *supra* Sections VIII.A.1, VIII.A.2, and VIII.A.3—Mehta anticipates claim 15.

105. In order for electrical power to be delivered from the power supply to the needles, there must be a continuous, uninterrupted electrical connection from the power supply to the needles. Due to the geometry of Mehta's microneedling apparatus and its various components, that continuous, uninterrupted electrical connection must extend from (a) the power supply, through (b) the device proximal end, (c) an electrical conductor on the device proximal end configured to electrically contact the contact portions 116, (c) the contact portions 116 themselves, and (d) the needles 104. Such pathway must necessarily include an electrical connector in the device proximal end that is couplable to a signal generator (*i.e.*, the power supply), as recited by claim 15 of the '812 patent.

106. As discussed *supra* paragraph 81, (i) the needles 104 are part of a needle assembly 102 that is a component of the removable cartridge 100 (*see*, *e.g.*, Ex-1006, 9:40–43, 14:15–19) and (ii) the power supply is either connected to the

handpiece/device body 210 via a cable 96 or provided in the handpiece/device body 210 itself (*see*, *e.g.*, *id*., 9:40–43, 10:53–65). The electrical pathway between the power supply and the needles must necessarily—in order for electrical power to be delivered from the power supply to the needles—extend across the interface between the removable cartridge 100 and the handpiece/device body 210. As discussed *supra* Section VIII.A.1.d), there must be (a) at least one electrical contact (or a set of electrical contacts) disposed on the removable cartridge 100 or a component thereof and (b) at least one electrical contact (or a set of electrical contacts) disposed on the handpiece/device body 210 such that, when the removable cartridge 100 is coupled to the handpiece/device body 210, the electrical contacts on both sides contact one another to provide an electrical connection therebetween. Moreover, in order for electrical power to be transmitted from the power supply *(i.e.*, signal generator) to the needles, there must be an electrical connector on the proximal end of the user holdable device that is electrically connected to the power supply *(i.e.*, signal generator) in order to transmit the electrical signal to the handpiece/device body 210.

107. As discussed *supra* Section VIII.A.1.d), the proximal end of the handpiece/device body 210 includes at least one electrical contact (*e.g.*, the "corresponding contact point trace," Ex-1006, 16:15–18) corresponding to and configured to contact the contact portions 116 disposed on the needle assembly

102. In order for electrical power to be transmitted from the power supply to the needles 104, the electrical connector on the proximal end of the handpiece/device body 210 must be electrically connected to the power supply. Therefore, there necessarily must be an electrical connector, located in the proximal end of the handpiece/device body 210, couplable to the signal generator. Absent such an electrical connector, energy could not flow from the signal generator to the needles 104.

108. Accordingly, Mehta discloses that the user holdable device proximal end includes an electrical connector (*i.e.*, the interface between the device body 210 and the cable 96) couplable (via the cable 96) to the signal generator (*i.e.*, the energy supply unit 90). Therefore, Mehta discloses the additional limitation of claim 15 of the '812 patent. Therefore—and for the reasons set forth *supra* Sections VIII.A.1, VIII.A.2, and VIII.A.3—Mehta anticipates claim 15.

5. Dependent Claim 16

109. Claim 16 recites the apparatus of claim 13, "wherein the user holdable device proximal end includes the motor, the motor including a drive shaft releasably couplable to the needle assembly." In my opinion, Mehta discloses the additional limitation of claim 16 of the '812 patent. Therefore—and for the reasons set forth *supra* Sections VIII.A.1 and VIII.A.2—Mehta anticipates claim 16.

110. As discussed *supra* Section VIII.A.2, Mehta discloses a motor (*i.e.*,

the actuator 250) and a drive shaft (*i.e.*, the shaft 256) couplable to the deployable needle assembly (*i.e.*, via the coupling portion 118 of the needle assembly 102) positioned within the proximal end of the handpiece/device body 210. A POSA would have understood the drive shaft 256 to be a component of the motor (*i.e.*, actuator 250). Furthermore, because the cartridge 100 is attachable and detachable from the handpiece/device body 210, the connection between the drive shaft 256 and the coupling portion 118 of the needle assembly 102 can be interrupted by detaching the cartridge from the handpiece/device body 210. The drive shaft 256 is thus releasably couplable to the deployable needle assembly.

111. Mehta discloses that a motor (*i.e.*, the actuator 250) and a drive shaft (*i.e.*, the shaft 256) releasably couplable to the deployable needle assembly (*i.e.*, via the coupling portion 118 of the needle assembly 102) are positioned within the proximal end of the handpiece/device body 210. Mehta teaches that "the device body 210 includes a moveable actuator 250 adjacent to the cartridge receiving surface 254" (Ex-1006, 18:23–25). The part "adjacent to the cartridge receiving surface 254" is the proximal end of the device body 210. Thus, the proximal end of the device body 210 includes the motor.

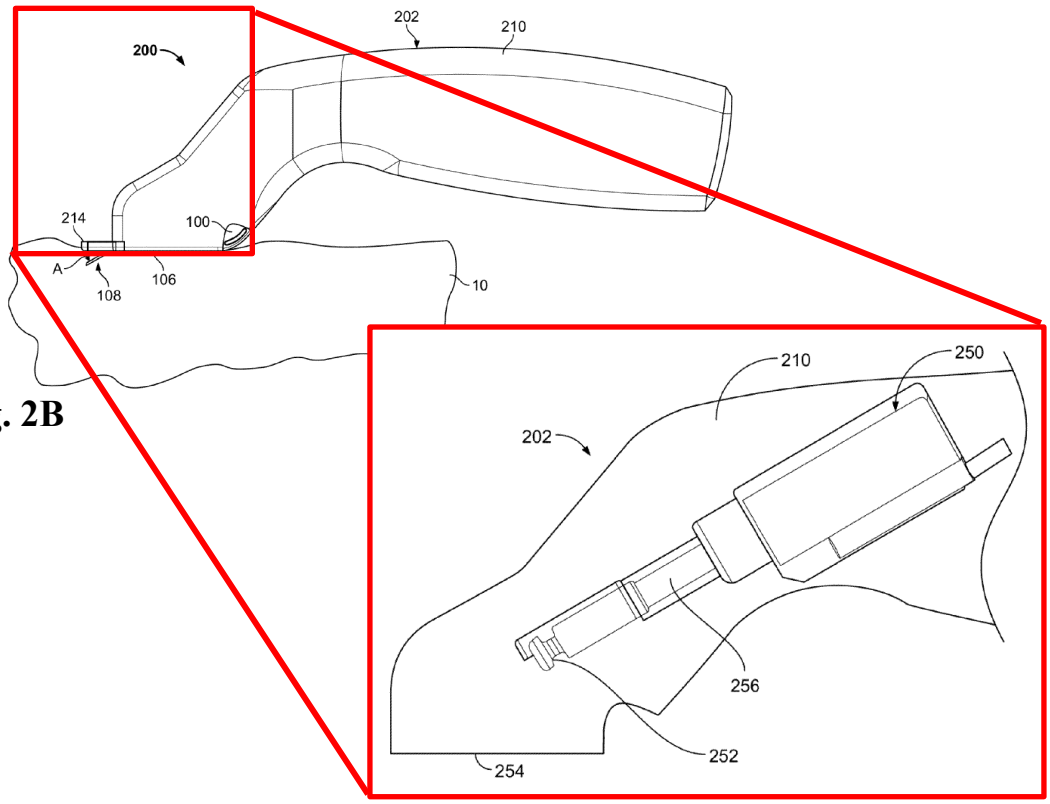

Mehta—Fig. 2B

Mehta—Fig. 5

Mehta further teaches that "an engagement portion 252 on the shaft couples to the probe assembly (e.g. via a coupling portion 118 shown above) to advance and retract the probes." Ex-1006, 18:27–30. Figs. 2B and 5 of Mehta, reproduced above, illustrates the actuator 250, including the shaft 256 with engagement portion 252, disposed in proximal end of the device body 210.

112. Accordingly, Mehta teaches that the user holdable device proximal end includes the motor (*i.e.*, the actuator 250), the motor including a drive shaft (*i.e.*, the shaft 256) releasably couplable (via engagement of the engagement portion 252 of the shaft 256 with the coupling portion 118 of assembly 102) to the needle assembly (*i.e.*, the assembly 102). Accordingly, Mehta discloses the

additional limitation of claim 16 of the ’812 patent. Therefore—and for the reasons set forth *supra* Sections VIII.A.1 and VIII.A.2—Mehta anticipates claim 16.

6. Independent Claim 1

113. As discussed in more detail below, Mehta discloses each and every element of independent claim 1. Therefore, Mehta anticipates claim 1 of the ’812 patent.

a) [1pre] A method of treating dermatological tissue, comprising:

114. Mehta discloses microneedling methods for treating dermatological tissue to, for example, enhance the appearance of a patient’s skin. *See*, *e.g.*, Ex-1006, 2:37–43. Microneedling methods, like those described by Mehta, both (i) trigger the skin’s natural healing response to stimulate collagen production and (ii) percutaneously deliver energy to cause contraction of existing collagen tissue in the skin’s dermis. The result of such microneedling treatment methods is tightened and rejuvenated skin with fewer visible fine lines and wrinkles.

115. Mehta teaches devices and methods to “treat cosmetic conditions affecting the skin of various body parts.” Ex-1006, 1:14–19. Mehta’s devices and methods target specific layers of the skin for treatment. *See*, *e.g.*, *id*., 8:45–48 (“[W]hen applying cosmetic treatment to the skin for tightening or removal of wrinkles, it is desirable to deliver energy to the dermis.”); *see also id*. 2:37–62, 3:42–56, 7:52–59. Treatment of the skin—and specific layers thereof—constitutes

treatment of dermatological tissue.

116. Accordingly, Mehta discloses [1pre], i.e. a method of treating dermatological tissue.

b) [1a] placing a user holdable device releasably couplable deployable needle module end surface on or near dermatological tissue to be treated,

117. Mehta's methods for treating dermatological tissue involve placing a microneedling device, which is holdable by a user, against a patient's skin and inserting microneedles into the patient's skin to apply treatment thereto.

118. Mehta discloses "placing a tissue engaging surface of an energy delivery device against a surface of the tissue." Ex-1006, 5:3–6. Mehta's energy delivery device includes a user holdable device releasably couplable deployable needle module end surface (the front portion 112 of the removable cartridge 100), and a POSA would have understood that using Mehta's skin treatment apparatus 200 would necessarily entail placing the front portion 112 of the removable cartridge 100 on or near dermatological tissue to be treated. For example, Fig. 7A of Mehta, reproduced below, illustrates the front portion 112 of the removable cartridge 100 placed on an area of tissue 156 directly above a region treated by an active area 122 of a needle 104.

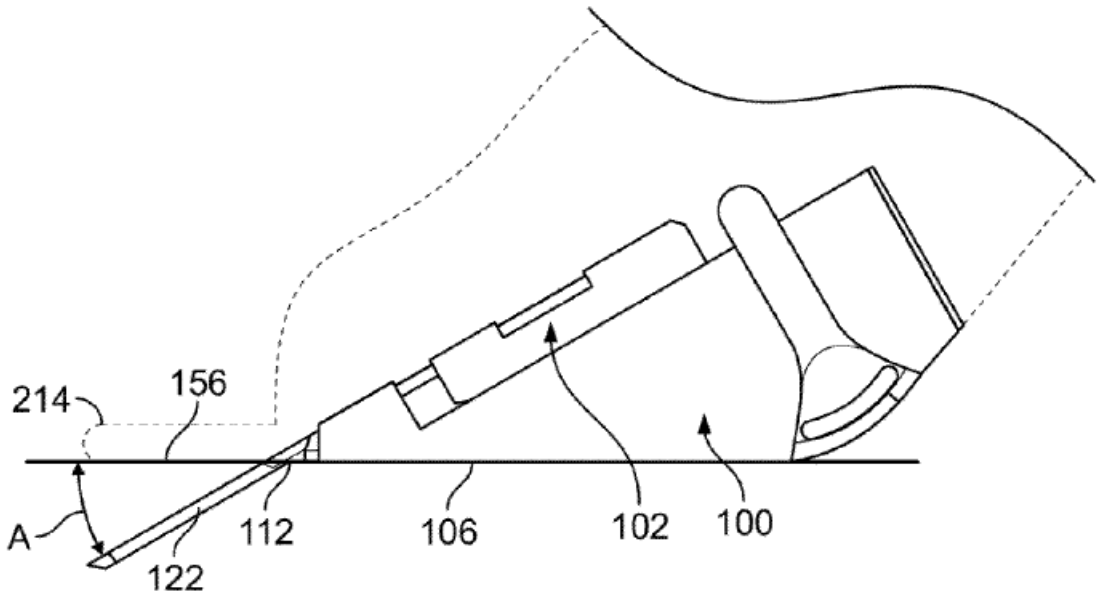

Mehta—Fig. 7A

Accordingly, Mehta's microneedling treatment method involves placing a user holdable device releasably couplable deployable needle module end surface (*i.e.*, an end surface of the needle module 100) on or near dermatological tissue to be treated, as recited by claim 1 of the '812 patent. Therefore, Mehta discloses [1a].

c) [1b] the user holdable device including a proximal end and the releasably couplable deployable needle module, the releasably couplable deployable needle module mechanically separatably from the user holdable device proximal end and including a needle assembly including a plurality of needles,

119. Mehta discloses [1b]. *Supra* Section VIII.A.1.b).

d) [1c] the needle assembly movable within the releasably couplable deployable needle module to extend the plurality of needles from the releasably couplable deployable needle assembly end surface

120. Mehta discloses [1c]. *Supra* Section VIII.A.1.c).

e) [1d] while at least one electrical contact of the needle assembly remains electrically coupled to at least one electrical contact of the user holdable device proximal end; and

121. Mehta discloses [1d]. *Supra* Section VIII.A.1.d).

f) [1e] communicating electrical signals from the user holdable device proximal end to the needle assembly via the electrical contacts.

122. Mehta discloses [1e]. Mehta teaches that the needle assembly 102 "can have multiple connection portions 116, 117," and "in one possible variation, the proximal connection portion 116 can electrically couple to a temperature detecting circuit on the hand unit" while "distal connection portion 117 can connect to a power delivery circuit." Ex-1006, 16:62–17:7. Figs. 4A and 4C of Mehta, which illustrate the multiple connection portions 116 and 117 of the assembly 102, are depicted below.

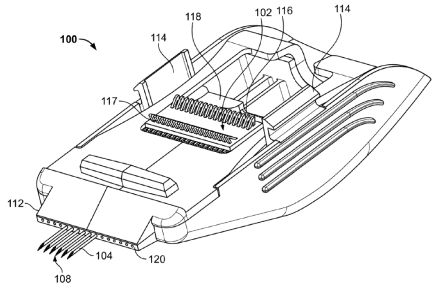

Mehta—Fig. 4A

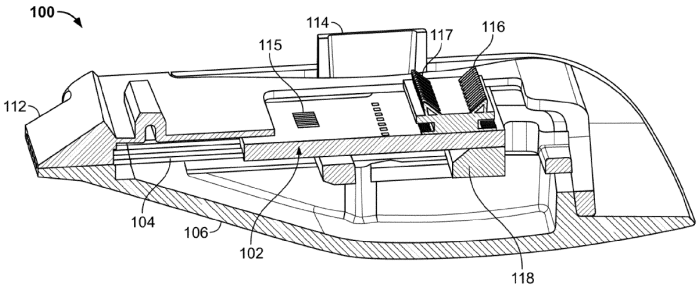

Mehta—Fig. 4C

123. The method of treatment in Mehta includes communicating (*i.e.*, transmitting) electrical signals (*i.e.*, RF signals) from the user holdable device proximal end to the needle assembly to deliver treatment by denaturing or

coagulating collagen in a dermal layer. *See, e.g.*, Ex-1006, 11:14–20, 24:46–47. Mehta additionally teaches that "[i]n such an example, the temperature of the electrodes can be continuously monitored while the power delivery to the electrodes can be limited to distal advancement of the assembly." *Id.,* 17:8–11. Continuously monitoring the temperature of the electrodes—via an electrical coupling of the proximal connection portion 116 to a temperature detecting circuit on the hand unit (*i.e.*, the device body 210)—requires communicating signals, *i.e.*, electrical signals, from the proximal end of the handpiece/device body 210 to the plurality of the needle assembly 102 (via the proximal connection portion 116 of the needles 104). For example, Mehta teaches that a needle "can have multiple connection portions 116, 117," and "in one possible variation…connection portion 116 can electrically couple to a temperature detecting circuit on the hand unit" while "connection portion 117 can connect to a power delivery circuit." Ex-1006, 16:62–17:8. Connection portions 116 and 117 are depicted in Fig. 4A of Mehta (reproduced below).

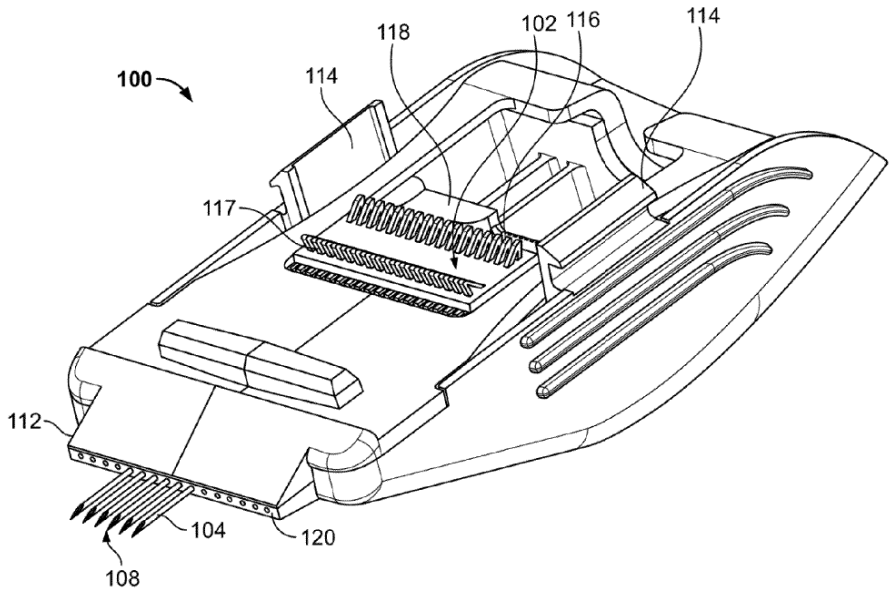

Mehta—Fig. 4A

124. Furthermore, as noted *infra* Section VIII.A.9, Mehta teaches (i) measuring, prior to the delivery of RF treatment to a patient's dermatological tissue, the impedance between a pair of microneedles inserted into the patient's dermatological tissue. *See*, *e.g.*, Ex-1006, 24:57–60. Measuring the impedance between a pair a microneedles inserted into the patient's dermatological tissue requires communicating electrical signals to the needle assembly which includes the plurality of needles, in order to carry out the measurement.

125. Accordingly, Mehta discloses communicating electrical signals (*i.e.*, those necessary to deliver RF signal and communicate the results of temperature and impedance measurements) from the user holdable device proximal end (*i.e.*, of the handpiece/device body 210) to the needle assembly 102 via electrical contacts

(*i.e.*, an electrical coupling of the proximal connection portion 116). Therefore, Mehta discloses [1e].

* * *

126. For the foregoing reasons (*supra* Sections VIII.A.6.a)–VIII.A.6.f)), Mehta anticipates claim 1.

7. Dependent Claim 2

127. Claim 2 recites that the method of claim 1 further includes "energizing a motor coupled to the needle assembly to cause the plurality of the needles to extend a desired distance from the releasably couplable deployable needle module end surface." In my opinion, Mehta discloses the additional limitation of claim 2. Therefore—and for the reasons set forth *supra* Section VIII.A.6—Mehta anticipates claim 2.

128. For the reasons set forth *supra* Section VIII.A.2, Mehta discloses "a motor coupled to the needle assembly to extend the plurality of needles a desired distance from the releasably couplable deployable needle assembly end surface when the motor is energized with a particular signal," as required by claim 13. One difference between claim 13 and claim 2 is that claim 2 recites extending a desired distance from the "needle module end surface" rather than the "needle assembly end surface." Because relative positions of the needle module end surface and the needle assembly end surface is known in the configuration, Mehta discloses a

desired distance from either end surface. Ex-1006, 14:15–19, Fig. 2D (showing needles extended from the module end surface 106). Accordingly, Mehta discloses the additional limitation of claim 2. Therefore—and for the reasons set forth *supra* Section VIII.A.6—Mehta anticipates claim 2.

8. Dependent Claim 3

129. Claim 3 recites that the method of claim 2 further includes "energizing the plurality of needles via a signal generator electrically coupled to the user holdable device proximal end."

130. For the reasons set forth *supra* Section VIII.A.3, Mehta discloses the additional limitation of claim 3. Therefore—and for the reasons set forth *supra* Sections VIII.A.6 and VIII.A.7—Mehta anticipates claim 3.

9. Dependent Claim 6

131. Claim 6 recites that the method of claim 3, further includes "energizing the motor to deploy the plurality of needles to a predetermined depth and directing the signal generator to energize the plurality of needles at a predetermined intensity for a predetermined duty cycle." In my opinion, Mehta discloses the additional limitation of claim 6. Therefore—and for the reasons set forth *supra* Sections VIII.A.6– VIII.A.8—Mehta anticipates claim 6.

132. Mehta specifically teaches that RF energy can be provided in pulses, and that an amplitude (*i.e.*, intensity) and duration (which is related to the duty

cycle) of the pulses are predetermined prior to the delivery of the RF energy. *See*, *e.g.*, Ex-1001, 20:13–55. Mehta discusses measuring tissue parameters prior to the delivery of treatment to the tissue to be treated, and controlling aspects of the treatment based on the measured tissue parameters. *See, e.g.*, Ex-1006, 24:5–12. Specifically, Mehta teaches (i) measuring, prior to the delivery of RF treatment to a patient's dermatological tissue, (a) the temperature of a patient's dermatological tissue in the vicinity of a microneedle and/or (b) the impedance between a pair of microneedles inserted into the patient's dermatological tissue, and (ii) controlling, based on measured temperature and/or impedance values, the manner in which RF energy is delivered to the patient's dermatological tissue. *See*, *e.g.*, *id*., 3:42–67, 24:5–12.

133. As discussed *supra* Section (VIII.A.2), Mehta discloses a motor (*i.e.*, the actuator 250) coupled (via the shaft 256 and the coupling portion 118 of the assembly 102) to the needle assembly 102 to extend the plurality of needles (*i.e.*, the needles/electrodes/probes 104) a desired distance (*e.g.*, using a step-motor) from the releasably couplable deployable needle assembly end surface when the motor is energized with a particular signal (*i.e.*, by the control system/energy supply unit 90). Causing the needles to extend a desired distance deploys them to a predetermined depth in a patient's tissue.

134. As further discussed *supra* (Section VIII.A.3), Mehta discloses a

signal generator (*i.e.*, energy supply unit 90) electrically coupled to the user holdable device proximal end (*i.e.*, the device body 210) to energize the plurality of needles (*i.e.*, the probes/electrodes 104). Mehta teaches that "the duty cycle of variations of the present system can be pulsed so that temperature measurements can be taken between the pulsed deliveries of energy." Ex-1006, 20:21–24.

135. Mehta teaches predetermining pulse parameters—including duration (which corresponds to duty cycle) and amplitude (which corresponds to intensity)—prior to providing a pulse and then predetermining modified pulse parameters again prior to a subsequent pulse. Specifically, Mehta teaches that (i) "[p]ulsing the energy delivery allows for an improved temperature measurement in the period between energy deliveries and provides precise control of energy delivery" (*id.* 20:24–27), (ii) "[e]ach pulse has a parameter, including amount of energy, duration, maximum energy delivered, energy wave form or profile (square wave, sinusoidal, triangular, etc.), current, voltage, amplitude, frequency, etc." (*id.,* 20:31–35), and (iii) "[t]he controller compares the measured temperature to a desired temperature," and "[b]ased on the difference, the energy parameters are adjusted for the subsequent energy pulse" (*id.,* 20:39–42). Mehta teaches predetermining pulse parameters—which include duty cycle and intensity—prior to providing a pulse and then predetermining modified pulse parameters again prior to a subsequent pulse. Mehta also teaches that the present system can be

pulsed with varying duty cycles so that temperature measurements can be taken between the pulsed deliveries of energy. *See id.,* 20:21–24. Mehta also teaches that a "control system can be adjusted to control the amount or a rate of energy deposition depending on a measured parameter, such as a tissue impedance for example." *Id*., 20:48–55. The rate of energy deposition is proportional to the duration of the pulse parameter disclosed by Mehta (*id*., 20:29–35), which is directly related to the duty cycle.

136. Accordingly, Mehta discloses energizing the motor (*i.e.*, that comprised by actuator 250) to deploy the plurality of needles (*i.e.*, probes/electrodes 104) to a predetermined depth (*i.e.*, a desired depth for treatment, determined beforehand, e.g., through selection of a particular cartridge 100) and directing the signal generator (*i.e.*, the energy supply unit 90) to energize the plurality of needles (*i.e.*, probes/electrodes 104) at a predetermined intensity for a predetermined duty cycle (*i.e.*, a duration and amplitude determined by a controller prior to delivery of a pulse and a specific duty cycle), as recited by claim 6 of the '812 patent. Mehta also discloses predetermination of treatment parameters, such as intensity and duty cycle, through user selection or adjustment. *See*, *e.g.*, *id*., 35:8–22 (physician adjustment of treatment settings), 37:35–41 (adjusting time-at-temperature), 3:40–41 (adjusting parameters of energy supply unit). Accordingly, Mehta discloses the additional limitation of claim 6 of the '812 patent. Therefore—

and for the reasons set forth *supra* Sections VIII.A.1, VIII.A.2, and VIII.A.3—Mehta anticipates claim 6.

10. Dependent Claim 8

137. Claim 8 recites the method of claim 1, "wherein the user holdable device proximal end includes a motor with a drive shaft releasably couplable to the deployable needle assembly and the method further including energizing the motor coupled via the drive shaft to the needle assembly to cause the plurality of needles to extend a desired distance from the releasably couplable deployable needle module end surface."

138. For the reasons set forth *supra* Sections VIII.A.2 and VIII.A.5–VIII.A.7, Mehta discloses the additional limitation of claim 8. Therefore—and for the reasons set forth *supra* Section VIII.A.6—Mehta anticipates claim 8.

B. Ground II: Claims 1–6, 8, 10, and 12–17 Would Have Been Obvious over Mehta and the Knowledge of a POSA

139. In my opinion, claims 1–6, 8, 10, and 12–17 of the '812 patent would have been obvious over Mehta in view of the knowledge of a POSA.

1. Independent Claims 1 and 12

a) Independent Claim 12

140. As discussed in Section VIII.A.1, Mehta discloses each and every element of claim 12.

141. To the extent that Patent Owner argues that any of elements in claim

12 is not disclosed by Mehta, either explicitly or inherently, it would have been obvious, in view of the knowledge of a POSA, to modify the microneedling apparatus of Mehta to provide any such element. For example, with respect to element [12c], it would have been obvious to a POSA to have at least one electrical contact on the proximal end of the handpiece 210 remain electrically coupled to the contact portions 116 of the needle assembly 102 and thereby form an electrical pathway extending from the power supply (*i.e.*, energy supply unit 90/power supply residing in handpiece 210) to the needles 104. The motivation would have been to provide such an electrical pathway while simultaneously allowing one cartridge 100 to be disposed after a first patient is treated and another cartridge 100 attached to the handpiece 210 prior to a second patient being treated.

142. I also note that, although Mehta describes and illustrates slight variations or so-called "embodiments" throughout, they are nonetheless not entirely distinct and separate alternatives to one another. For example, Figs. 2A–2B of Mehta depict a system 200 generally, and Figs. 4A–4F and 7A–7E depict a variety of exemplary implementations of components that could be included in the system 200. Ex-1006, 6:51–62, 7:1–12. In a more specific example, Fig. 4A depicts an exemplary implementation of a cartridge 100 that may be incorporated into the system 200 of Figs. 2A–2B, and Fig. 7A depicts a side view of how needles 104 of the cartridge 100 of Figs. 2A–2B would enter human tissue. I also

note that Mehta states "[i]t is expressly intended that, wherever possible, the invention includes combinations of aspects of the various embodiments described herein or even combinations of the embodiments themselves." *Id*. 6:3–6. Accordingly, a POSA would have understood that the microneedling apparatuses and methods disclosed by Mehta include combinations of what Mehta refers to as embodiments as well as combinations of certain aspects of what Mehta refers to as embodiments. Furthermore, it would have been obvious to a POSA to combine both embodiments of Mehta and aspects thereof.

b) Independent Claim 1

143. With respect to independent claim 1, as discussed *supra* Section VIII.A.6, Mehta discloses all elements of claim 1. Furthermore, to the extent that Patent Owner argues that any of elements in claim 1 is not disclosed by Mehta, either explicitly or inherently, it would have been obvious, in view of the knowledge of a POSA, to modify the methods disclosed by Mehta to provide any such element. *Supra* Section VIII.B.1.a).

2. Dependent Claims 2 and 13

a) Dependent Claim 13

144. With respect to the elements in claim 13, I understand Serendia may contend that the term "desired distance" should be interpreted so as to specifically require a user-settable distance of needle extension along the axis of extension. For the reasons set forth *supra* Section VI.E.3, Serendia's proposed interpretation is

unduly narrow and should be rejected as contrary to the plain meaning of the term "desired distance." Nevertheless, even if Serendia's unduly narrow interpretation were to be adopted, claim 13 would have been obvious over Mehta and the knowledge of a POSA.

145. As discussed *supra* Section VIII.A.2, Mehta discloses a motor (*i.e.*, the actuator 250) coupled (via the shaft 256 and the coupling portion 118 of the assembly 102) to the needle assembly 102 to extend the plurality of needles (*i.e.*, the needles/electrodes/probes 104) a desired distance (*e.g.*, using a step-motor) from the releasably couplable deployable needle assembly end surface when the motor is energized with a particular signal (*i.e.*, an appropriate command signal from control system/energy supply unit 90)—as is recited by claim 13 of the '812 patent. Mehta teaches that motor provides for a "mode of movement" of the needles that can include "incremental indexing (via a ratchet-type system), [and] stepping (via an [*sic*] step-motor)." Ex-1006, 15:36–40. With either a ratchet-type system or a step-motor, the needles 104 of Mehta would move between two terminal positions (one corresponding to a fully retracted position of the needle assembly 102/needles 104, and the other corresponding to a fully extended position of the needle assembly 102/needles 104) by traversing a number of intermediate positions, each intermediate position separated by a single, incremental step.

146. A POSA would also have understood that, in the microneedling

apparatus of Mehta where the actuator 250 is provided in the form of a step-motor, a gear mechanism must necessarily be present that converts the rotational movements of the step-motor into translational movements of the shaft 256—and therefore of the needles 104 (which are coupled to the shaft via the coupling portion 118 of the needle assembly 102)—in order for the needles 104 to extend and retract.

147. At the time of the invention, a POSA would have been familiar with step-motors and gear mechanisms capable of moving the needle assembly 102/needles 104 of Mehta's microneedling device in steps of approximately 100 µm. Specifically, a POSA would have known that providing the actuator 250 of Mehta's microneedling apparatus in the form of a step-motor would allow fixed angle rotations of the step-motor that cause fixed, approximately 100 µm translational movements of the shaft 256 (coupled via the coupling portion 118 of the needle assembly 102) and, therefore, of the needles 104.

148. Moreover, a POSA would have known how to provide control signals to a step-motor to cause the step-motor to assume a particular intermediate position between two terminal positions. For example, a POSA would have known that a step-motor can be controlled by providing a train of input pulses (*e.g.*, in the form of a square wave) to the step-motor, where each pulse of the pulse train is tailored (*i.e.*, through selection of proper parameters, such as period and amplitude) to

cause a single, fixed-angle rotation of the shaft of the step-motor. A POSA would also have known how to program a controller to track a current position of the step-motor (or alternatively, to track a current position of an associated gear mechanism) and to generate a pulse train having a number of pulses equal to a number of steps between that current position and a desired position (*i.e.*, for the step motor or the associated gear mechanism). A POSA would therefore have known how to program a controller to cause the step-motor of Mehta to move the needles 104 to any specific intermediate step between a fully retracted position and a fully extended position.

149. As also discussed *supra* Section VIII.A.2, the motor of Mehta's microneedling device is driven by a control system/energy supply unit (*see*, *e.g.*, Ex-1006, 10:38–39), and the control system/energy supply unit "may also include an input/output (I/O) device that allows the physician to input control and processing variables, to enable the controller to generate appropriate command signals" (*id.,* 12:5–8). To the extent that Mehta does not explicitly disclose controlling the motor to provide for needle extension by a distance that is user-settable, it would have been obvious to a POSA to modify Mehta to provide such control. Providing such control would streamline the treatment process, decrease the time required for treatment, and limit treatment cost and waste generated during treatment. In addition, providing such control would allow more precise

targeting of treatment within the dermis, thereby providing improved treatment outcomes.

150. Proper needle depth may vary from one location on a patient's face to another. For example, when a user moves the microneedling device of Mehta from a patient's forehead to cheeks (the dermis is typically thinner on the forehead) or between different regions of a patient's check (the dermis is typically thinner on top of the cheek bones immediately beneath the eye sockets than it is above the facial cheek muscles), it may be necessary to adjust, or fine-tune, needle deployment depth. If only two positions—extended and retracted—were provided for the needles 104, it might be necessary to swap cartridges when treating different facial regions or when treating the face and the neck. By modifying Mehta to (i) allow a user to select a particular extension distance or insertion depth of the needles 104 (corresponding to a specific intermediate step of a step-motor) and/or (ii) allow an incremental increase or decrease, by one or more steps of a step-motor, of the extension distance and/or insertion depth of the needles 104, a user would be provided with flexibility necessary to rapidly adapt needle deployment and depth to different facial regions.

151. Mehta teaches that, by "detect[ing] the layer of skin in which the needles were deployed," "real-time information" can be provided "to the physician…to confirm proper needle deployment and needle depth." Ex-1006,

37:7–11. For example, Mehta discloses a "tissue characteristic indicator" that provides "a virtual depiction 350 of the depth or location" of the needles to "illustrate an actual placement" of the needles, which "allows the physician to…identify whether the array [of needles] is located within the desired tissue layer." *Id.,* 32:46–50, 32:52–59, 33:14–19. In the event the tissue characteristic indicator indicated an improper needle depth, incrementally increasing or decreasing needle deployment depth (*e.g.*, by ~100μm steps of a step-motor) would allow a user, e.g. an aesthetician or dermatologist, to fine-tune needle extension to precisely and expeditiously achieve proper needle deployment and depth—in both different facial regions as well as on both the face and the neck—with a single cartridge. As a result, patients could be treated in less time, and clinicians and physicians could treat more patients per day. Furthermore, because it would not be necessary to use multiple cartridges when treating the same patient, fewer cartridges would be discarded (as compared to the case of swapping cartridges when treating different regions of the patient's skin) thereby resulting in less waste and lower costs. It would also have made the treatment safer and more effective since it ensures that the tissue at the desired depth is being treated.

152. Mehta also teaches that "precisely determin[ing] depth of placement" of the needles "allowed tunable dosimetry permitting controlled delivery of a specific thermal coagulation profile at a particular depth in the dermis" and

"ensured adequate sparing of normal tissue." *Id.,* 39:33–41. Allowing a user to (i) select a particular extension distance or insertion depth of the needles 104 (corresponding to a specific intermediate step of a step-motor) and/or (ii) incrementally increasing or decreasing, by one or more steps of a step-motor, an extension distance and/or insertion depth of the needles 104 would enable more precise control over needle depth (as compared to providing only retracted and extended positions combined with different cartridges with different needles lengths/sizes) would provide a user, e.g. an aesthetician or dermatologist, with both (i) an enhanced ability to precisely control needle depth and thereby the thermal coagulation profile and (ii) more flexibility in spacing fractional lesions (*i.e.*, at different depths within the dermis) to ensure adequate sparing of normal tissue, thereby improving treatment outcomes.

153. Furthermore, allowing a clinician select a particular extension distance or insertion depth of the needles 104 (corresponding to a specific intermediate step of a step-motor) would facilitate compound treatments that target different layers of the skin—without necessarily requiring cartridges to be swapped. Mehta teaches that the skin treatment apparatus, "with its use of penetrating devices lends itself to the delivery of agents and materials directly to a specific region of tissue" (*id.*, 35:61–63), that "anesthetic agents such as lidocaine can be delivered through the probe" (*id.*, 35:63–65), that "[c]ollagen or other filler

material can be delivered prior to, during, or after energy delivery" (*id.*, 35:66–36:4), and that "Botulinum Toxin type A (Botox®) can also be delivered to the dermis or to the muscular layer below the dermis by further inserting the access probe" (*id.*, 9:22–25). Modifying Mehta to enable a clinician to variably select a needle extension distance would allow the clinician to move the needles from a first treatment depth (corresponding, *e.g.*, to a thermal treatment designed to cause coagulation of collagen in the dermis of a patient's skin) to a second treatment depth (corresponding, *e.g.*, to a depth for the delivery of Botox®, collagen, or an anesthetic agent). Such modifications of would shorten the duration of such compound treatments, thereby allowing patients to spend less time in a clinical setting, allowing clinicians to treat more patients in a given amount of time, and decreasing the cost of treatment.

154. Accordingly, a POSA would have been motivated, by a desire to both (i) streamline treatment and decrease treatment costs and (ii) improve treatment outcomes for patients, modify Mehta to allow a user to set, *e.g.*, via a user interface, a distance of needle extension along the axis of extension, *i.e.*, by providing the functionality necessary to allow a user to select a particular extension distance or insertion depth of the needles 104 and/or incrementally increasing or decreasing, by one or more steps of a step-motor, an extension distance and/or insertion depth of the needles.

155. Modifying Mehta to enable the variable selection of a needle extension distance ranging from a fully retracted position to a fully extended position would be straightforward and within the capability of a POSA. As discussed *supra* ¶148, a POSA would have known how to provide control signals to a step-motor to cause the step-motor to assume a particular intermediate position between two terminal positions. The only modifications necessary to enable variable selection of a needle extension distance would have been (i) augmenting the I/O device (*i.e.*, to include an input element that allows for selection of a particular extension distance or insertion depth of the needles 104 and/or a command to incrementally increase or decrease an extension distance and/or insertion depth of the needles) and (ii) configuring the control system/energy supply unit 90 to provide the functionality to convert the user-selected needle extension distance/insertion depth and/or incremental needle movement command to a control signal for the step-motor (*e.g.*, a pulse train). Both modifications would have been within the skill of a POSA as of the effective date of the ’812 patent.

b) Dependent Claim 2

156. With respect to claim 2, for the foregoing reasons set forth *supra* Section VIII.B.2.a), it would have been obvious to modify Mehta to enable a user to set, *e.g.*, via a user interface, a distance of needle extension along the axis of extension, *i.e.*, by providing the functionality necessary to allow a user to select a

particular extension distance or insertion depth of the needles 104 and/or incrementally increasing or decreasing, by one or more steps of a step-motor, an extension distance and/or insertion depth of the needles. Therefore, even if Serendia's unduly narrow interpretation of "desired distance" (*see supra* Section VI.E.3) were to be adopted, dependent claim 2 would have been obvious over Mehta and the knowledge of a POSA.

3. Dependent Claims 3 and 14

157. With respect to claims 3 and 14, it would have been obvious to a POSA to provide a signal generator to supply an RF signal to the needles 104 in order to effectuate treatment of a patient's skin.

4. Dependent Claims 6, 8, and 15–16

158. Mehta discloses the features recited by claims 6, 8, and 15–16. *Supra* Sections VIII.A.4–VIII.A.5 and VIII.A.9–VIII.A.10. Accordingly, for the reasons set forth *supra* Sections VIII.A.1–VIII.A.10 and those set forth *supra* Sections VIII.B.1–VIII.B.5, dependent claims 6, 8, and 15–16 would have been obvious over Mehta in view of the knowledge of a POSA.

159. To the extent that Patent Owner argues that any additional element of any of claims 6, 8, and 15–16 is not disclosed by Mehta, either explicitly or inherently, it would have been obvious, in view of the knowledge of a POSA, to modify the microneedling apparatus of Mehta to provide such element(s).

a) Dependent Claim 6

160. For the reasons set forth *supra* Section VIII.B.2, it would have been obvious to modify Mehta to enable a user to set, *e.g.*, via a user input, a depth of needle deployment along the axis of extension, *i.e.*, by providing the functionality necessary to allow a user to select a particular extension distance or insertion depth of the needles 104 and/or incrementally increasing or decreasing, by one or more steps of a step-motor, an extension distance and/or insertion depth of the needles. Therefore, it would have been obvious to deploy the needles to a "predetermined depth" in the form of a user-settable depth, and claim 6 would have been obvious over Mehta in view of the knowledge of a POSA for this additional reason.

b) Dependent Claims 8 and 16

161. For the reasons set forth *supra* Sections VIII.A.5 and VIII.A.10, claims 8 and 16 would have been obvious over Mehta in view of the knowledge of a POSA.

c) Dependent Claim 15

162. It would have been obvious to a POSA to provide, in the proximal end of the handpiece 210, an electrical connector couplable to the signal generator to form an electrical pathway extending from the power supply (i.e. energy supply unit 90/power supply residing in handpiece 210)—through the handpiece 210/the proximal end thereof—to the needles 104. The motivation would have been to provide such an electrical pathway while simultaneously allowing one cartridge

100 to be disposed after a first patient is treated and another cartridge 100 attached to the handpiece 210 prior to a second patient being treated.

5. Dependent Claims 4–5 and 17

a) Dependent Claims 4 and 17

163. Claim 17 recites the apparatus of claim 12, "wherein the user holdable device proximal end further includes at least one embedded LED therein and the apparatus further including a photonic signal generator electrically coupled to the least one embedded LED, the at least one embedded LED capable of illuminating the needle assembly when energized." Claim 4 recites the method of claim 3, "wherein the user holdable device proximal end further includes at least one embedded LED therein and further including energizing the at least one embedded LED so the at least one embedded LED illuminates the releasably couplable deployable needle module."

164. In my opinion, it would have been obvious, in view of the knowledge of a POSA, to modify the microneedling apparatus and the microneedling methods disclosed by Mehta to include the additional limitations of claims 4 and 17 of the '812 patent. Therefore—and for the reasons set forth *supra* Section VIII.B.1–VIII.B.2—claims 4 and 17 would have been obvious over Mehta in view of the knowledge of a POSA.

165. Mehta discloses providing light sources at the proximal end of the

handpiece/device body 210. Specifically, Mehta discloses "additional energy transfer elements located at the working end of a treatment unit 202," that "may comprise sources of light," and that "may be present on the cartridge 100, [or] on the [handpiece/]device body 210." Ex-1006, 11:24–39. Mehta does not explicitly state that the light sources are LEDs. However, a POSA would have known that one or more LEDs could be used as the light sources at the proximal end of the handpiece/device body 210. Mehta also discloses a source of energy for providing photonic radiation, *i.e.*, a photonic signal generator as recited by claim 17. Specifically, Mehta discloses that "radiant energy may be supplied by the energy source/supply 90 that is coupled to a diode, fiber, or other emitter at the distal end[5] of the treatment unit" and further discloses that "the energy source/supply 94 and associated energy transfer element may comprise laser, light, or other similar types of radiant energy (*e.g.*, visible, ultra-violet, or infrared light)." *Id.*, 11:27–33.

166. LEDs were, as of the priority date of the '812 patent, known to be highly energy efficient, relatively low cost, and readily available sources of light. A POSA would been motivated use one or more LEDs for Mehta's light sources in order to provide a cost-effective source of illumination (*e.g.*, to illuminate a tissue

[5] Mehta uses the terms "proximal" and "distal" with reference to a user of the device. *See* Ex-1006 at 4:35–43, 6:63–65, 9:62–64, 18:21–23, 35:8–10, FIGS. 3A, 3B, 5, 12A, 12B. Accordingly, the "distal end" referred to by Mehta is an end of Mehta's handpiece 210 that is proximal to dermatological tissue to be treated, *i.e.*, the proximal end recited by the claims of the '812 patent.

region into which the needles are to be inserted and thereby assist an aesthetician or dermatologist in confirming the intended treatment area (*see id*., 13:20–35), or to illuminate depth markings or other distinguishing features of the needles that allow the aesthetician or dermatologist to confirm that the needle is not driven too far into the patient's tissue (*see id*., 13:37–45)). Furthermore, using an LED to provide illumination during operation of Mehta's microneedling apparatus, *i.e.*, during the transmission of RF energy to a patient's dermis, would also provide an aesthetician or dermatologist with a visual indication of the operational status of the microneedling device, thereby reducing the risk of an unintentional overdose of RF energy. S*ee*, *e.g.*, Ex-1016, 4 (describing that an LED "emits a predetermined color at the same time as the high frequency is applied"). A POSA would have been motivated to provide for control of the photonic signal generator (*i.e.*, the energy source/supply 90 or the energy source/supply 94), so as to energize the LED during the transmission of RF energy, and doing so (*e.g.*, by programming a controller of the energy source/supply and providing a pathway for supplying power from the energy source/supply to the LEDs) would have been a matter of routine engineering within the skill of a POSA.

167. A POSA would also have known, as of the priority date of the '812 patent, that the one or more LEDs could be embedded in the proximal end of the handpiece/device body 210. A POSA would also have known that portions of the

cartridge 100 and the handpiece/device body 210 could be made from transparent or translucent materials to allow light emitted by an embedded LED to be transmitted to an area targeted for illuminations. Choosing to embed the one or more LEDs in the proximal end of the handpiece/device body 210 would have been an obvious design choice—as would have been the use of transparent or translucent materials for portions of the cartridge 100 and the handpiece/device body 210. A POSA would have appreciated that embedding the one or more LEDs would prevent them from protruding outward from the handpiece/device body 210, thereby allowing the handpiece/device body 210 to retain a sleek and appealing outer profile, making it more attractive to customers of the device manufacturer as well as to patients. A POSA would also have appreciated that the one or more LEDs in the handpiece/device body 210 would allow the LEDs to illuminate the treatment area—and the needle assembly 102 and the removable cartridge 100—in an unobstructed fashion (*e.g.*, by providing a transparent window between the LEDs and the treatment area) or to illuminate the needles 104/needle assembly 102 and thereby provide a visually appealing glow of the proximal end of the handpiece/device body 210, the cartridge 100, and the needle assembly 102 during operation of the microneedling device (*e.g.*, by providing a translucent section between the LEDs and the treatment area). Embedding one or more LEDs in the handpiece/device body 210 would have been a matter of routine engineering within

the skill of a POSA.

168. For the foregoing reasons, it would have been obvious to use LEDs as the light sources at the proximal end of the handpiece/device body 210 of Mehta, *e.g.*, to provide a cost-effective and reliable source of illumination for illuminating the treatment area. Furthermore, modifying Mehta to use LEDs as the light sources would have been a straightforward and predictable use of LEDs according to their established function, and would have been a matter of routine engineering within the skill of a POSA.

169. In the modified device of Mehta, the user holdable device proximal end further includes at least one embedded LED therein (*i.e.*, the light sources—in the form of at least one LED—at the proximal end of the handpiece/device body 210) and the apparatus further including a photonic signal generator (*i.e.*, the energy source/supply 90 or the energy source/supply 94) electrically coupled to the least one embedded LED, the at least one embedded LED capable of illuminating the needle assembly (*i.e.*, needle assembly 102)/needle module (*i.e.*, removable cartridge 100) when energized. Therefore, dependent claims 4 and 17 of the ’812 patent are obvious over Mehta in view of the knowledge of a POSA.

b) Dependent Claim 5

170. Claim 5 recites the method of claim 4, “wherein the needle assembly includes a translucent section and further including energizing the least one

embedded LED to illuminate the plurality of needles via the needle assembly translucent section."

171. In my opinion, it would have been obvious, in view of the knowledge of a POSA, to modify the microneedling apparatus and the microneedling methods disclosed by Mehta to include the additional limitations of claim 5 of the '812 patent. Therefore—and for the reasons set forth *supra* Sections VIII.B.2 and X.B.7.a)—claim 5 would have been obvious over Mehta in view of the knowledge of a POSA.

172. Mehta discloses the use of translucent materials for components of the microneedling apparatus so as "not [to] obscure a view of the surface tissue above the region of treatment." Ex-1006, 22:65–23:2. Furthermore, translucent materials were, as of the priority date of the '812 patent, well known to a POSA. It would have been obvious to a POSA to provide at least a section of the needle assembly 102 from a translucent material (as opposed to from an opaque material) in order to allow the light emitted by one or more embedded LEDs to illuminate the needles 104. For example, a POSA would have been aware of the availability of translucent printed circuit boards (PCBs), *e.g.*, made from glass or polyimide, and would have appreciated that such a PCB could be used to construct a portion of the needle assembly 102, *e.g.*, a portion from which connection portions 116 protrude. Furthermore, a POSA would have known that sections of the needle assembly

102—as well as of cartridge 100 and/or handpiece 210 located around the needle assembly 102—could be formed from translucent materials such as frosted glass, polyethylene, or polypropylene. Using a translucent material for a section of the needle assembly 102 of Mehta would have been an obvious design choice—and one that would create (as compared with an opaque material) a visually appealing glow of the needle assembly 102 (by scattering illumination provided by an LED embedded in the proximal end of the handpiece/device body 210) during operation of the microneedling device. Furthermore, Mehta teaches that it is beneficial for a physician to visualize aspects of the needles 104 during treatment (*see*, *e.g.*, *id*., 13:37–45), and communicating illumination to the needles 104, *e.g.*, via a translucent section of the needle assembly 102, during application of RF energy by the needles would provide a physician with a visual indication of the radiative status of the needles.

173. For the foregoing reasons, it would have been obvious to construct a portion of the needle assembly 102 from a translucent material to provide a translucent section that communicates illumination from the least one embedded LED to the plurality of needles, as recited by claim 5 of ’812 patent. Furthermore, modifying Mehta to form a portion of the needle assembly 102 from a translucent material would be a straightforward and predictable use of translucent materials according to their established function. Therefore, dependent claim 5 of the ’812

patent would have been obvious over Mehta in view of the knowledge of a POSA.

6. Dependent Claim 10

174. Dependent claim 10 recites the method of claim 1, "wherein a first electrical contact of the at least one electrical contact is electrically coupled to a first plurality of the plurality of needles and a second electrical contact of the at least one electrical contact is electrically coupled to a second, different plurality of the plurality of needles."

175. In my opinion, it would have been obvious, in view of the knowledge of a POSA, to modify the microneedling apparatus and the microneedling methods disclosed by Mehta to include the additional limitations of claim 10 of the '812 patent. Therefore—and for the reasons set forth *supra* Section VIII.B.1.b)—claim 10 would have been obvious over Mehta in view of the knowledge of a POSA.

176. Mehta discloses a microneedling apparatus and microneedling treatment methods that involve what is known as "bipolar operation." In bipolar operation, electromagnetic, *e.g.*, RF, radiation is transmitted between pairs of microneedles: one microneedle of the pair acts as a transmitter, and the other microneedle of the pair acts as a receiver. *See*, *e.g.*, Ex-1006, 17:59–61, 37:25–34 (describing pairs of an "active" and a "return" needle and passing current between needles "of opposite polarity"). Mehta teaches both (i) providing every pair of microneedles with an "independent and electrically isolated" power supply channel

(*id*., 25:45–49) and (ii) coupling multiple pairs of microneedles to the same power supply channel (*see id*., 18:18–20).

177. A POSA would have appreciated that, when coupling multiple pairs of microneedles to the same power supply channel, it would not be necessary to provide an individual contact portion 116 in the form of a spring contact or spring pin for every needle. Instead, reducing the number of contact portions between needle assembly 102 and the handpiece/device body 210 would decrease the cost and overall complexity of both the removable cartridges 100 and the handpiece/device body 210. Accordingly, a POSA would have been motivated, by a desire to reduce cost and complexity, to replace the plurality of connection portions 116 provided for every needle 104 (as illustrated, e.g., in Fig. 4A of Mehta) with only two connection portions 116: a first spring contact or spring pin electrically coupled (*e.g.*, by one or more wires or conductors) to a first set of needles (*i.e.*, to the transmitter microneedle of each microneedle pair) and a second spring contact or spring pin electrically coupled (by one or more other wires or conductors) to a second set of needles (i.e. to the receiver microneedle in each microneedle pair).

178. Such a modification would have been a straightforward and predictable use of electrical conductors, e.g. wires, according to a well-established function, *i.e.*, providing multiple, parallel transmission paths within a single power

supply channel, and would have been a matter of routine engineering with the skill of a POSA. Specifically, such a modification could be achieved by providing multiple, parallel metal traces branching off from a single contact portion 116 and connecting to individual ones of the needles 104. Therefore, dependent claim 10 of the ’812 patent would have been obvious over Mehta in view of the knowledge of a POSA.

179. While Mehta discusses a number of advantages that can be realized by providing every pair of microneedles with an “independent and electrically isolated” power supply channel, a POSA would not have understood such a configuration to be essential to the microneedling devices of Mehta. Instead, a POSA would have appreciated that there would be, for at least some segments of the aesthetics market, considerable advantages to a single power supply channel device. For example, a POSA would have appreciated that a multi-channel device would require highly complicated controller circuitry, an expensive, multi-channel power supply, and complicated transmission pathways—and be far more expensive than a single channel device as a result. During my time at Primaeva/Syneron, our multi-channel microneedling devices had a list price of about $120k per device, while our competitors’ list prices for their single channel microneedling devices were about $50k. The disposable cartridges demonstrated a similar price disparity: ~$350/cartridge for our multi-channel devices and ~$50 for our competitors’

single-channel devices. Accordingly, a POSA would have been motivated by significant cost savings to provide a more affordable, single-channel microneedling device that appeals to a cost-sensitive segment of the aesthetics market. Therefore, dependent claim 10 of the ’812 patent would have been obvious over Mehta in view of the knowledge of a POSA.

C. Ground III: Claims 4–5 and 17 Would Have Been Obvious over Mehta, Na’848, and the Knowledge of a POSA

180. In my opinion, claims 4–5 and 17 of the ’812 patent are obvious over Mehta, Kang, and Na’848.

1. Motivation to Combine Mehta and Na’848

181. Na’848 is readily combinable with Mehta because Na’848—like Mehta—is directed to systems and methods for treating dermatological tissue using RF energy to improve the cosmetic condition of a patient’s skin. *See*, *e.g.*, Ex-1007, ¶¶25–27; Ex-1006, 2:37–41; Fig. 2A.

Na’848—Fig. 2A	Mehta—Fig. 2A
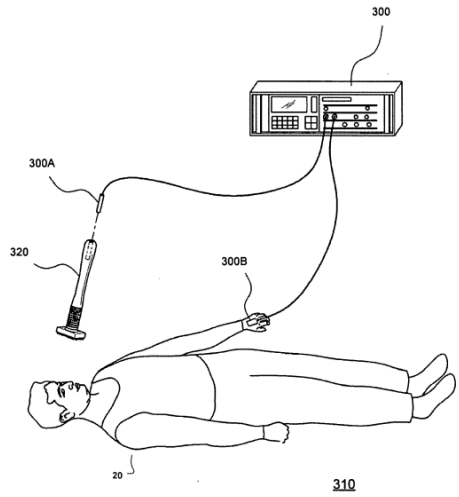 FIGURE 2A	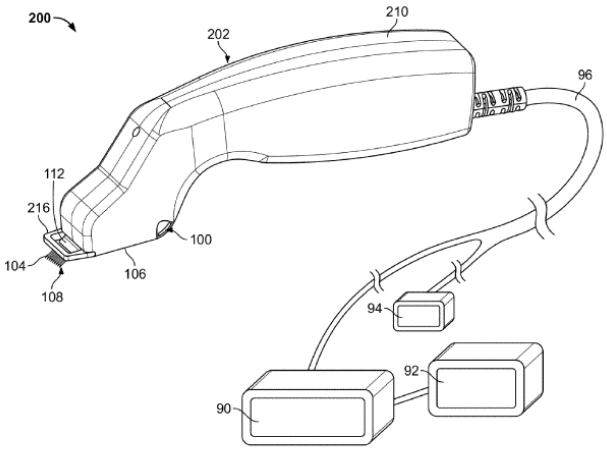 FIG. 2A

It therefore would have been obvious, because both references are directed to similar technologies and a POSA would have understood the benefits of combining the two references, to apply advantageous teachings of Na'848 to Mehta's microneedling apparatus and method. Specifically, it would have been obvious to utilize the LEDs described by Na'848 for Mehta's light sources and to use the translucent materials described by Na'848 to form at least a section of the needle assembly 102 of Mehta. Such modifications would have been a matter of routine engineering within the skill of a POSA, and a POSA would have had a high likelihood of success in implementing such modifications.

182. Mehta discloses light sources at the proximal end of handpiece 210 and a photonic signal generator electrically coupled to those light sources. Na'848 teaches that, for energized microneedling treatment, the application of "LED light of specific frequencies" to dermatological tissue can "decreas[e] treatment time and facilitate healing." Ex-1007, ¶46. Na'848 also teaches several "optimal LED wavelengths for skin repair." *Id*., ¶47. And Na'848 teaches that "generat[ing] one or more signals for LEDs" by a controller coupled to the LEDs "via one or more electric wires 106." *Id*., ¶37.

183. A POSA would have been motivated to utilize LEDs in Mehta's treatment system in order to provide illumination of Mehta's needles 104 and the tissue into which they are inserted during treatment with actinic light of optimal

wavelengths for skin repair—as taught by Na'848. It would also have been obvious, based on the teachings of Na'848, to energize the LEDs, *e.g.*, by "generat[ing] one or more signals for the LEDs" (*id.*, ¶37) by a controller, *e.g.*, "the energy source/supply 94" of Mehta. Utilizing LEDs, as taught by Na'848, in Mehta's system would have been straightforward and well within the capability of a POSA.

184. Furthermore, as discussed *supra* Section VIII.B.5.a), embedding LEDs in a handpiece, such as the handpiece 210 of Mehta, was well-known to a POSA, and it would have been an obvious design choice to embed LEDs, such as those disclosed by Na'848, in the proximal end of the handpiece 210 of Mehta.

185. As also discussed *supra* Section VIII.B.5.b), Mehta discloses that portions of the treatment device 202 are translucent. *See* Ex-1006, 22:65–23:10. Na'848 discloses an acupuncture plate 200 of a dermatological treatment apparatus 10 having an acupuncture section 250 that "include[s] a plurality of acupuncture pins or needles" and that can be "translucent" and formed of a "polyurethane, medical silicon, or other pliable, translucent, hypoallergenic material." Ex-1007, ¶¶23, 35. Notably, the only disclosure in the '812 patent of a needle assembly that includes a translucent section is from the portion of the '812 patent that corresponds to Na'848. *See supra* ¶68; *see also* Ex-1001, 5:31–34 ("pin section 250, 353, may be translucent"), Figs. 1C (element 250), 2F (element 353); Ex-

1007, ¶35, Figs. 1C (element 250), 2F (element 353). While the ’812 patent also discloses a translucent material in connection with the description of outer casing 924E of the deployable needle module 924 (*see* Ex-1001, 12:61–64), the outer casing 924E is a component that is separate and distinct from the needle assembly 924F (*see* Ex-1001, 13:15–34, Figs. 11A, 11B).

186. It would have been obvious for a POSA to modify Mehta to provide the needle assembly 102 in the form of Na’848’s plate including a plurality of needles and a translucent section—particularly for variations of Mehta’s device that “can be held at a more vertical angle to the target tissue like a pencil or pointer” (Ex-1006, 9:57–59) and that include needle assembly 102 with an MxN array of needles 104 (*see id.*, 15:49–54), where both M and N have relatively large values, *e.g.*, ~5–10. A POSA would have understood that, in order to provide a treatment device held at a vertical angle, the plane defining the front portion of the cartridge 112 (*i.e.*, the plane from which needles 104 protrude) would be rotated relative to the orientation shown in Mehta’s figures, such that it would extend approximately parallel to the tissue engaging surface 106. A POSA would have appreciated that in some variations described by Mehta (*i.e.*, variations designed to be held at a vertical angle), the plane defining the front portion of the cartridge 112 would be the same as the plane defining the tissue engaging surface 106. A POSA would also have appreciated that, in variations of Mehta’s device having an MxN

array of needles 104 (where both M and N have relatively large values, e.g. ~5–10), the needle assembly 102—as well as the plane defining the front portion of the cartridge 112 and the retracted tip plane—would occupy a larger area than that shown in Mehta's figures. Thus, a POSA would have understood that, in some variations of Mehta's treatment device (*i.e.*, those variations designed to be held at a vertical angle and having an MxN array of needles 104 for relatively large values of M and N), the geometric arrangement of the components in the proximal end of the handpiece would vary somewhat from the geometric arrangement depicted in Mehta's figures. It would have been a matter of routine engineering and well within the skill of a POSA to provide such geometric arrangements of components.

187. Forming at least a section of the needle assembly 102 of Mehta from the "polyurethane, medical silicon, or other pliable, translucent, hypoallergenic material," as described by Na'848, would facilitate transmission of light, from an LED embedded in the proximal end of handpiece 210, to the tissue into which the needles 104 are inserted during treatment. For example, in variations designed to be held at a vertical angle and having an MxN array of needles 104 for relatively large values of M and N, the needle assembly 102 would occupy a relatively large area at the far proximal end of the handpiece 210. In such variations, it would be geometrically convenient to provide a section of the needle assembly 102 between the tissue to be treated and an LED embedded in the proximal end of the handpiece

210. A POSA would have understood that, in such variations of Mehta's device, an acupuncture plate having a translucent section—such as that disclosed by Na'848, could be coupled to the motor of Mehta. A POSA would further have understood that the translucent section of that acupuncture plate would communicate illumination from an embedded LED in the proximal end of the handpiece 210 to the needles.

188. In addition, it would have been within the skill of a POSA to provide Mehta's needle assembly 102 in the form of a plate that includes a plurality of needles and a translucent section, as disclosed by Na'848. Specifically, it would have been a matter of routine engineering to provide an acupuncture plate as disclosed by Na'848 in the device of Mehta—*e.g.*, in a variation designed to be held at a vertical angle and having an MxN array of needles 104 for relatively large values of M and N. It also would have been a matter of routine engineering to geometrically rearrange the components of Mehta—to provide such a variation—so that the translucent section of the acupuncture plate would lie between the embedded LED and the needles.

2. Dependent Claims 4 and 17

189. In my opinion, it would have been obvious, in view the teachings of Na'848, to modify the microneedling apparatus and the microneedling methods disclosed by Mehta to include the additional limitations of claims 4 and 17 of the

’812 patent. A POSA would have been motivated to modify Mehta based on the teachings of Na’848 for the reasons set forth *supra* Sections VIII.B.5.a) and VIII.C.1. Therefore—and for the reasons set forth *supra* Sections VIII.B.1, VIII.B.2.b), and VIII.B.3—claims 4 and 17 are obvious over Mehta in view of the knowledge of a POSA.

190. The microneedling apparatus of Mehta, as modified by Na’848, has a proximal end (*i.e.*, of the handpiece/device body 210) including at least one embedded LED therein (*i.e.*, the LED taught by Na’848) and further includes a photonic signal generator (*i.e.*, Mehta’s control system/energy supply unit 90 and/or additional power supply unit 94) coupled to the at least one embedded LED, the at least one embedded LED illuminating the needles (*i.e.*, needles 104 of Mehta)/the needle assembly (*i.e.*, needle assembly 102 of Mehta)/the needle module (*i.e.*, removable cartridge 100) when energized (*e.g.*, to (i) provide illumination of Mehta’s needle assembly/needle cartridge and the tissue into which they are inserted/to-be-inserted with actinic light of optimal wavelengths for skin repair, (ii) visualize the application of energy, and/or (iii) assist a physician in observing the needles at their point of insertion during treatment). Therefore, the microneedling apparatus and methods of Mehta, as modified in view of the teachings of Na’848 and the knowledge of a POSA, provide the additional limitations of claims 4 and 17 of the ’812 patent.

3. Dependent Claim 5

191. In my opinion, it would have been obvious, in view the teachings of Na'848, to modify the microneedling methods disclosed by Mehta to include the additional limitations of claim 5 of the '812 patent. A POSA would have been motivated to modify Mehta based on the teachings of Na'848 for the reasons set forth *supra* Sections VIII.B.5.b) and X.C.1. Therefore—and for the reasons set forth *supra* Sections VIII.B.1.b), VIII.B.2.b), VIII.B.3, VIII.B.5.a), and VIII.C.2—claim 5 would have been obvious over Mehta, Na'848, and the knowledge of a POSA.

192. The microneedling apparatus of Mehta, as modified by Na'848, includes a needle assembly (i.e. the needle assembly 102 of Mehta—as modified to include an acupuncture plate as disclosed by Na'848 and thereby provide a variation with an MxN array of needles and designed to be held at a vertical angle) including a translucent section (*i.e.*, the translucent section of Na'848's acupuncture plate) and further energizing the least one embedded LED to illuminate (*e.g.*, the actinic light taught by Na'848) the plurality of needles (as taught by Mehta) via the needle assembly translucent section. Therefore, the microneedling methods of Mehta, as modified by Na'848 and the knowledge of a POSA, provide the additional limitations of claim 5 of the '812 patent.

D. Ground IV: Claims 2–3, 6, 8, and 13–16 Would Have Been Obvious Over Mehta, Lee, and the Knowledge of a POSA

193. In my opinion, claims 2–3, 6, 8, and 13–16 of the ’812 patent are obvious over Mehta, Lee, and knowledge of a POSA.

1. Motivation to Combine Mehta with Lee

194. Mehta and Lee are readily combinable because both references are directed to systems and methods for treating dermatological tissue using needles driven into skin tissue by a step-motor. *See*, *e.g.*, Ex-1009, <23>–<26>, <45>–<53>, <60>–<63>, Figs. 2–4b; Ex-1006, 15:34–40, Fig. 2B, 5.

Lee—Fig. 2	Mehta—Fig. 2B
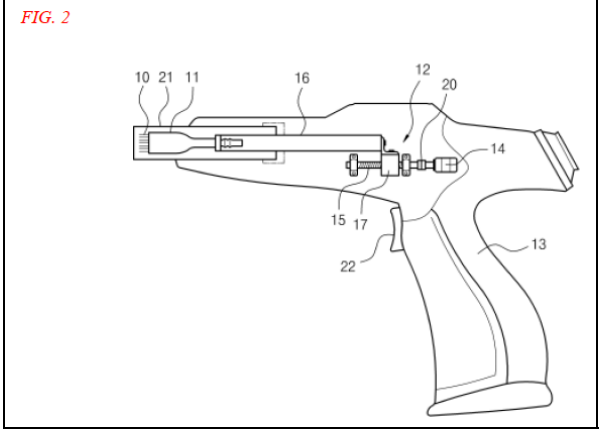	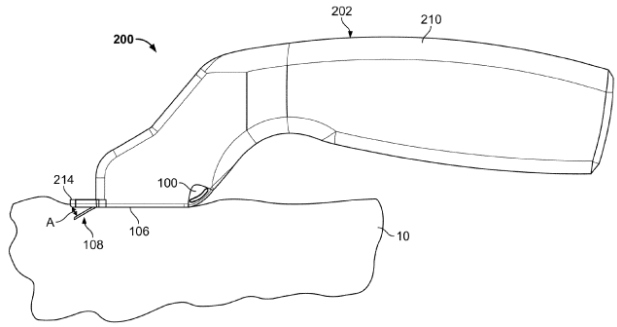

It would have been obvious to apply advantageous principles discussed in Lee to Mehta’s treatment system because both references are directed to similar technologies and a POSA would have understood the benefits of combining the two references. Specifically, it would have been obvious to a POSA to modify Mehta, based on the teachings of Lee, to allow a user to select a particular extension distance or insertion depth of the needles 104 and/or incrementally

increase or decrease, by one or more steps of a step-motor, an extension distance and/or insertion depth of the needles. Such modifications would have been a matter of routine engineering within the skill of a POSA, and a POSA would have had a high likelihood of success in implementing such modifications.

195. Lee expressly teaches the use of a step-motor for precise control of needle insertion depth along the axis of needle extension. Ex-1009, <45>, <50>, <69>, Figs. 4a–4b. Lee teaches a "position-controllable" motor 14, which may be a "stepping motor," that rotates to move a slider 17 and needle mount 11, which allows for precise control of an insertion depth of the needles along the axis of needle extension. Ex–1009, <46>, <50>, <69>, Figs. 4a-4b. Lee further teaches that the needles are extended and reciprocally retracted multiple times by repetitively driving the motor back and forth for dermatological treatment. Ex-1009, Figs. 4a–4b, <58>, <62>–<63>.

196. A POSA would have been motivated to utilize Mehta's motor in this manner taught by Lee, as both Mehta and Lee recognize the benefits of being able to control needle insertion to a specific target depth and location. Ex-1006, 12:41–13:4 (avoiding burns), 21:14–21 (uniformity; avoiding undesirable cosmetic outcomes and insufficient treatment), 33:30–31; Ex-1009, <69> (minimizing pain; low cost; customized treatment; safety). A POSA would also have been motivated to utilize Mehta's motor in the manner taught by Lee for the reasons discussed

supra Section VIII.B.2 (*e.g.*, streamlining the treatment process, decreasing time required for treatment, limiting treatment cost and waste generated during treatment, and allowing more precise targeting of treatment within the dermis, thereby providing improved treatment outcomes). Thus, to the extent that Mehta does not teach controlling the needle extension along the axis of extension, a POSA would have been motivated to improve upon Mehta by providing for the type of control taught by Lee to achieve an even more precise and flexible manner of inserting needles to a desired target depth and location.

197. Utilizing Mehta's motor in the manner taught by Lee would have been straightforward and predictable to a POSA, and would merely involve operating a known component (a stepper motor as disclosed in Mehta and as also disclosed in Lee) according to its established function (providing step-based actuation of needles along the axis of needle extension as expressly disclosed in Lee). The only modifications of Mehta that would be necessary to utilize Mehta's motor in the manner taught by Lee are those discussed *supra* Section VIII.B.2.a) (*i.e.*, (i) providing an input element that allows for selection of a particular extension distance or insertion depth of the needles 104 and/or for a command to incrementally increase or decrease an extension distance and/or insertion depth of the needles and (ii) augmenting the software and/or firmware of the control system/energy supply unit 90 to provide the functionality to convert the input to a

control signal for the step-motor). Lee specifically teaches one possible scheme for programming a motor to advance needles to extend by a desire distance. *See* Ex-1009, <50> ("motor 14 rotates to the extent of the pre-programmed setting in accordance with the mode selected" and "therefore, … the insertion depth of the microneedles can be controlled to fit in with the parameters"), <61> ("for the method of setting the mode such as the operational parameter of the motor, any method typically known in the convention art…may be adopted"), <33> ("[p]ressing the mode switch changes the mode" and "[t]he selected mode controls…the insertion depth of the needles."). Such modifications would have been a matter of routine engineering/programming, and would have been within the skill of a POSA. *Supra* Section VIII.B.2.a).

2. Dependent Claims 2 and 13

198. Claim 2 depends from claim 1. Claim 13 depends from claim 12. Mehta discloses or Mehta in view of the knowledge of a POSA renders obvious claims 1 and 12. *Supra* Sections VIII.A.1 and VIII.A.6.

a) Dependent Claim 13

199. I understand Serendia may contend that the term "desired distance" should be interpreted so as to specifically require a user-settable distance of needle extension along the axis of extension. For the reasons set forth *supra* Section VI.E.3, Serendia's proposed interpretation is unduly narrow and should be rejected

as contrary to the plain meaning of the term "desired distance." Nevertheless, even if Serendia's unduly narrow interpretation were to be adopted, claim 13 would have been obvious over Mehta in view of Lee.

200. As discussed *supra* Section VIII.A.2, Mehta discloses a microneedling apparatus that includes a motor (*i.e.*, actuator 250) that provides for a "mode of movement" of the needles 104 that can include "stepping (via an [*sic*] step-motor)." Ex-1006, 15:36–40. As discussed *supra* Section VIII.D.1, Lee expressly teaches the use of a stepper motor for precise control of needle insertion depth along the axis of needle extension. Ex-1009, <45>, <50>, <69>, Figs. 4a–4b. It would have been obvious to modify Mehta, in view of the teachings of Lee, to enable a user to set, *e.g.*, via a user interface, a depth of needle deployment along the axis of extension. Therefore, even if Serendia's unduly narrow interpretation of "desired distance" (*see supra* Section VI.E.3) were to be adopted, claim 13 would have been obvious over Mehta in view of Lee.

b) Dependent Claim 2

201. With respect to claim 2, for the foregoing reasons set forth *supra* Sections VIII.D.1. and VIII.D.2.a), it would have been obvious to modify Mehta, in view of the teachings of Lee, to enable a user to set, *e.g.*, via a user-interface, a depth of needle deployment along the axis of extension. Therefore, even if Serendia's unduly narrow interpretation of "desired distance" (*see supra* Section

VI.E.3) were to be adopted, independent claim 1 would have been obvious over Mehta in view of Lee.

3. Dependent Claims 3, 6, 8, and 14–16

202. Mehta discloses the features recited by claims 3, 6, 8, and 14–16. *Supra* Sections VIII.A.3–X.A.6. and VIII.A.8–VIII.A.10. Accordingly, for the reasons set forth *supra* Sections VIII.A.1–VIII.A.10 and those set forth *supra* Sections VIII.D.1–VIII.D.2, dependent claims 3, 6, 8, and 14–16 would have been obvious over Mehta in view of Lee.

203. For the reasons set forth *supra* Sections VIII.D.1–VIII.D.2, it would have been obvious to modify Mehta, in view of the teachings of Lee, to enable a user to set, *e.g.*, via a user interface, a depth of needle deployment along the axis of extension. Therefore, it would have been obvious to deploy the needles to a "predetermined depth" in the form of a user-settable depth, and claim 10 would have been obvious over Mehta in view of Lee for this additional reason.

E. Ground V: Claims 4–5 Would Have Been Obvious over Mehta, Lee, Na'848, and the knowledge of a POSA

204. It is my opinion that, for the reasons set forth *supra* Sections VIII.D.1 and VIII.D.2, it would have been obvious to a POSA to modify Mehta based on the teachings of Lee and the knowledge of a POSA to enable a user to set, *e.g.*, via a user interface, a distance of needle extension along the axis of extension. It is also my opinion that, for the reasons set forth *supra* Sections VIII.C.1–VIII.C.3, it

would have been obvious to a POSA to modify Mehta to provide the additional features of claims 4–5 of the ’812 patent. Therefore, if Serendia’s proposed interpretation of “desired distance” (*see supra* Section VI.E.3) is adopted, it is my opinion that claims 4–5 of the ’812 patent would have been obvious over Mehta, Lee, Na’848, and the knowledge of a POSA.

1. Motivation to Combine Mehta, Lee and Na’848

205. A POSA would have been motivated to combine Mehta with Lee for the reasons set forth *supra* Section VIII.D.1, and a POSA would have been motivated to add Na’848 to this combination of Mehta and Lee for the reasons set forth *supra* Section VIII.C.1. Mehta, Lee, and Na’848 are all directed to systems and methods of treating dermatological tissue, and a POSA would have been motivated to apply, to Mehta’s microneedling apparatus and methods, both (i) advantageous teachings of Lee regarding precise control of needle insertion depth, and (ii) advantageous teachings of Na’848 regarding the use of LEDs to illuminate a treatment device. *See supra* Sections VIII.C.1, VIII.D.1. The combination of these three references would have been a matter of routine engineering and would have yielded predictable results. *See id.*

F. Ground VI: Claims 1, 7, 9–12, and 18–20 Would Have Been Obvious over Livneh, Mehta, and the Knowledge of a POSA

206. In my opinion, claims 1, 7, 9–12, and 18–20 would have been obvious over Livneh, Mehta, and the knowledge of a POSA. It would have been obvious to

a POSA to combine Livneh with Mehta to arrive at the subject matter of claims 1, 7, 9–12, and 18–20.

1. Motivation to Combine Livneh with Mehta

207. It would have been obvious to a POSA to combine Livneh with Mehta to arrive at the subject matter of claims 1, 7, 9–12, and 18–20. Livneh and Mehta are readily combinable because both references are directed to systems and methods of treating dermatological tissue using energized microneedles, *e.g.*, using RF, to produce cosmetically beneficial effects. Ex-1010, ¶¶2, 5, 37, 40–42, 60, Fig. 3; Ex-1006, 2:37–43, 9:34–48, Fig. 2A.

Livneh—Fig. 3

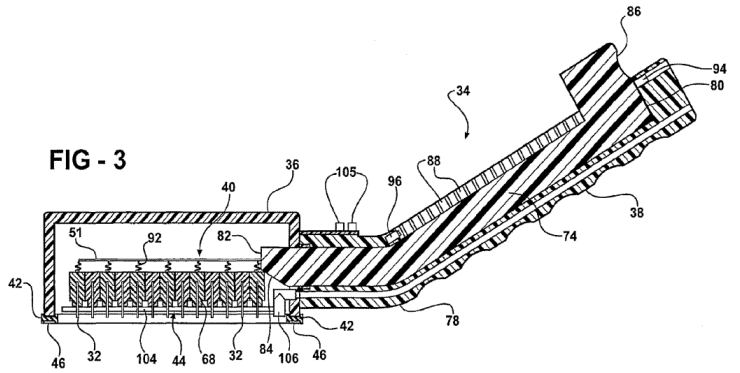

Mehta—Fig. 2A

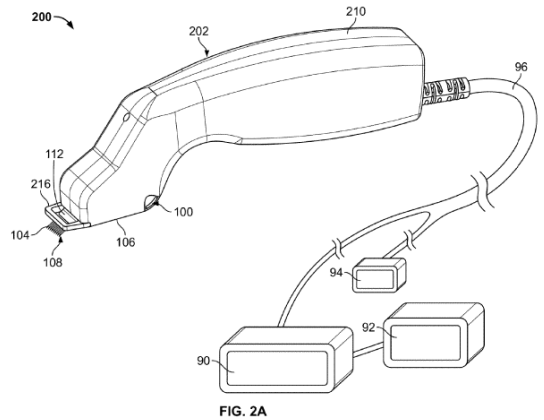

It would have been obvious to apply advantageous principles discussed in Mehta to Livneh's treatment system because both references are directed to similar technologies and a POSA would have understood the benefits of combining the two references.

208. Livneh discloses a skin treatment device including (1) a needle module encased by housing 36 (designated by the red box in Fig. 3 of Livneh reproduced below) and (2) a handle portion 38 (designated by the blue box in Fig. 3 of Livneh reproduced below).

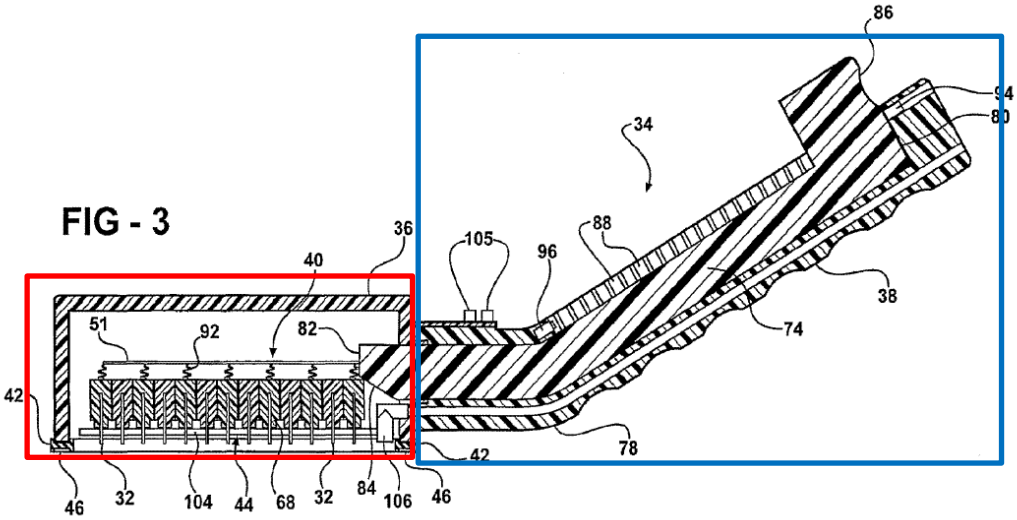

Livneh—Fig. 3

Livneh discloses "[t]he housing 36 is connected to a handle portion 38." Ex-1010, ¶33 (emphasis added). For the reasons discussed below, a POSA implementing Livneh's device would have been motivated to make this connection releasably couplable in light of Mehta's teaching of a removable needle module.

209. Mehta's microneedling device includes a removably couplable needle module that is mechanical separable from the proximal end of the handpiece. *See* Section VIII.A.1.b). For example, Mehta discloses that retention fasteners 114 can be used "for coupling with the device body as well as removal from the device body." Ex-1006, 15:28–33, Fig. 4A. Mehta discloses that detachable cartridge allow a user to customize the treatment by selecting a particular cartridge with a particular microneedle configuration from a set of different cartridges having different microneedle configurations. *See*, *e.g.*, *id.*, 9:40–55, 9:65–10:32.

210. Using disposable and detachable (*i.e.*, removable or releasably couplable) needle cartridges for a skin treatment device was well-known in the art prior to the filing of the '812 patent. Section VIII.A.1(b); Ex-1019, Figs.14A, 14B, ¶72; Ex-1013, Fig. 8, ¶¶179–180. Disposable and detachable needle cartridges were used for sanitary and economic reasons. For example, the Profound system, which was commercialized and sold in the U.S. in 2010, utilized detachable, disposable needle cartridges designed for the Profound console and handpieces. The user manual for the Profound system included warnings that cautioned against reusing the disposable needle cartridges to limit the risk of infection and patient-to-patient transmission of blood-based diseases. Plus, the microneedles would need to be regularly replaced because they become dull after a limited number of insertions into the skin, or because needles would have bent due to underlying bone hits or

cartridge movement during treatments. These events would hinder subsequent proper needle insertion in skin and negatively affect the safety profile of the procedure. Indeed, one or more needles with improper and/or incomplete skin penetration could produce adverse events such as blister, epidermal thermal injuries resulting in hyper or hypo-pigmentation issues, and/or other unwanted adverse events. When one or more needle penetration has been compromised, it is imperative to replace the needles by changing the cartridge – which implies providing a design where the cartridge which includes the needles is detachable from the handpiece. In addition, it would have been convenient and economically beneficial for customers and commercially advantageous for manufacturers to use a detachable needle cartridge so that the customers only need to purchase relatively inexpensive needle cartridges and replace them as needed without needing to autoclave the entire handpiece after each use for sterilization or replacing the entire handheld device when the needles become dull. Handpieces involved in transmitting RF energy to the needles include electrical connections and other electrical components, which make them difficult to sterilize with autoclave to make them safe for reuse. Therefore, a POSA would have been motivated to design the handpiece to be cleanable or to be covered with a sterile plastic wrap so that they do not have to be sterilized, and to design sterile cartridges which can be connected and disconnected from the handpiece. In addition, detachable,

disposable needle cartridges were also disclosed by Mehta (*see*, *e.g.*, Ex-1006, Fig. 2D), Hantash (*see*, *e.g.*, Ex-1019, Figs. 14A, 14B, ¶72), and U.S. Patent Application Publication No. 2009/0093749 by Shalev et al. ("Shalev") (*see*, *e.g.*, Ex-1013, Fig. 8, ¶¶179–180).

211. Although Livneh discloses an embodiment in which each needle is individually replaceable (*see* Ex-1010, Figs. 12–18, ¶¶61–63), a POSA would have recognized shortcomings of this embodiment and would have been motivated to improve it. Typically, the needles in the same needle module would need to be replaced together because they all would become dull or contaminated by being exposed to the same condition together. A POSA would have understood that it would be more convenient to replace the entire needles together simply by replacing a needle module rather than replacing each needle individually. And, a POSA would have recognized a lot of issues in replacing only a few needles out of dozens of needles, typically arranged quite close to one another in this type of handheld device (*e.g.*, Hantash discloses 0.5 mm or 1 mm of separation between needles. Ex-1019, ¶¶79–80). If a user were to replace individual needles on his/her own, accessing needles surrounded by other needles in this tight arrangement would likely be difficult, time-consuming, and frustrating for someone who it not technically trained. Plus, there would be a risk of damaging or contaminating the rest of the needles as well since a user would not likely have easy access to a sterile

work environment. Alternatively, if a user were to ship the entire handpiece to the manufacturer's customer service to have a few needles replaced by a professional every time a needle is damaged or contaminated, it would be too cumbersome and costly. Also, a POSA would have recognized that an individually replaceable needle as illustrated in Fig. 15 of Livneh would cost significantly more than a simple needle, which would consequently increase the cost of using the device. In light of such shortcomings of Livneh's embodiments, a POSA would have been motivated to improve the device by enabling replacement of a needle module rather than each needle individually.

212. The needle module and the handle portion of Livneh's handheld unit are connected via electrical and mechanical connections, as shown in Figs. 1 and 10 (reproduced below).

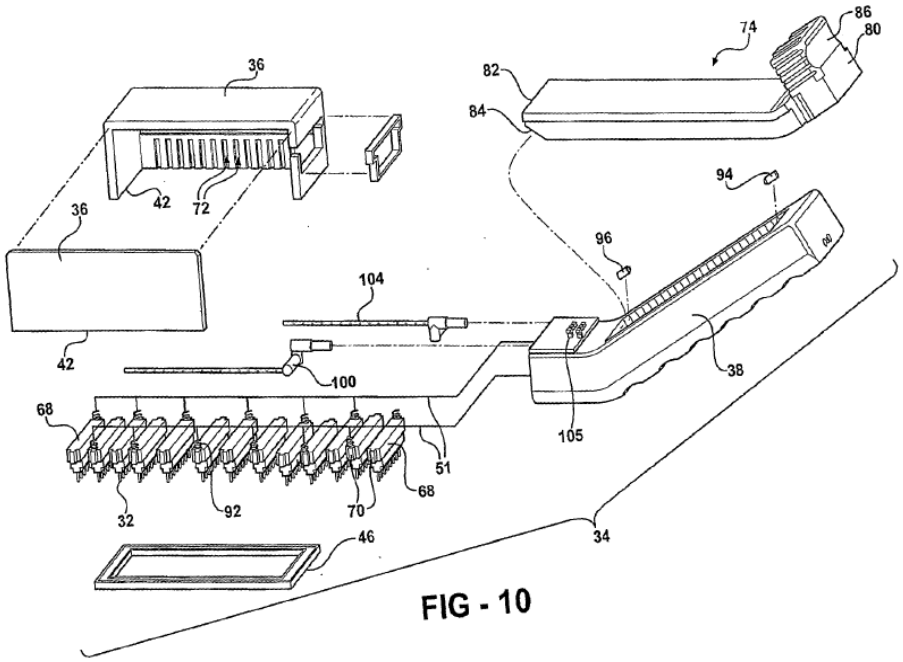

Livneh—Fig. 10

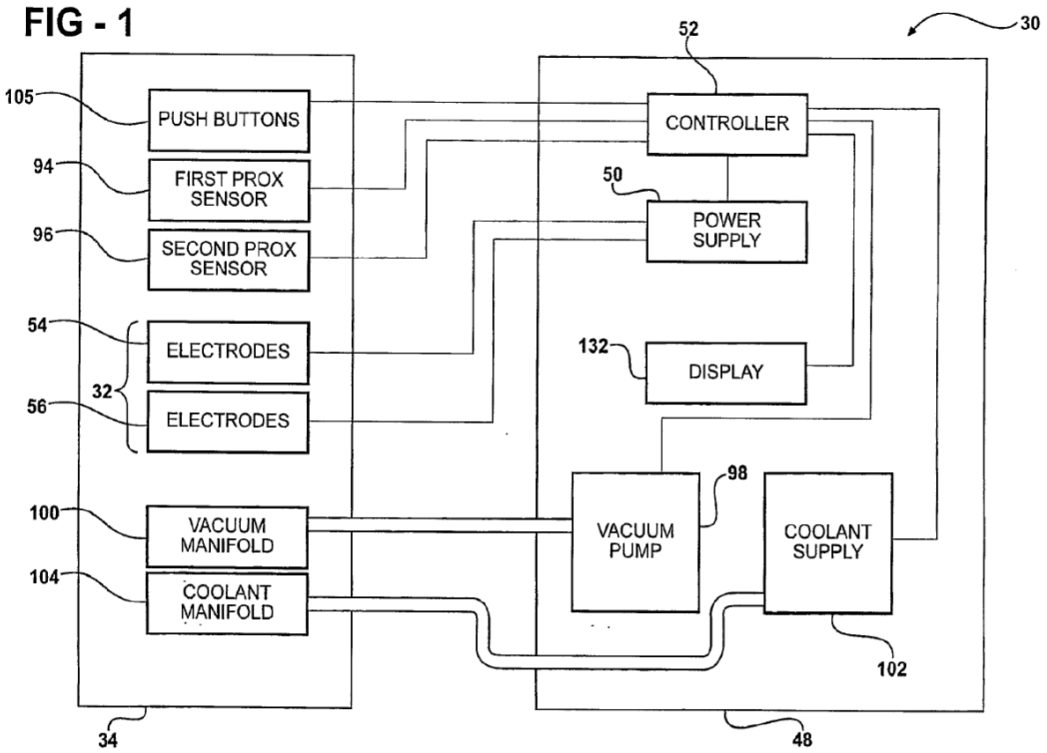

Livneh—Fig. 1

Making the needle module in Livneh releasably couplable to the handle portion would have been a matter of routine engineering because making both electrical and mechanical connections between two electrical components—the needle module and the handheld device—would have been well within the ordinary skill in the art. Livneh provides electrical and mechanical connections between the handheld unit 34 and the control unit 48. Ex-1010, Fig. 1 (reproduced below). As discussed in detail below, it would have been within the skill in the art to add well-known electrical and mechanical connectors to make these connections functional between a releasably couplable needle module and a proximal end of the handpiece.

213. As for the electrical connection, the wires 51 in Livneh provide electrical connections between the electrodes 32 and the power supply 50 to deliver the RF signal to the electrodes. Ex-1010, Fig. 10 (reproduced below), ¶49 ("one wire 51 provides a supply path from the power supply 50 and the other wire 51 provides a return path.").

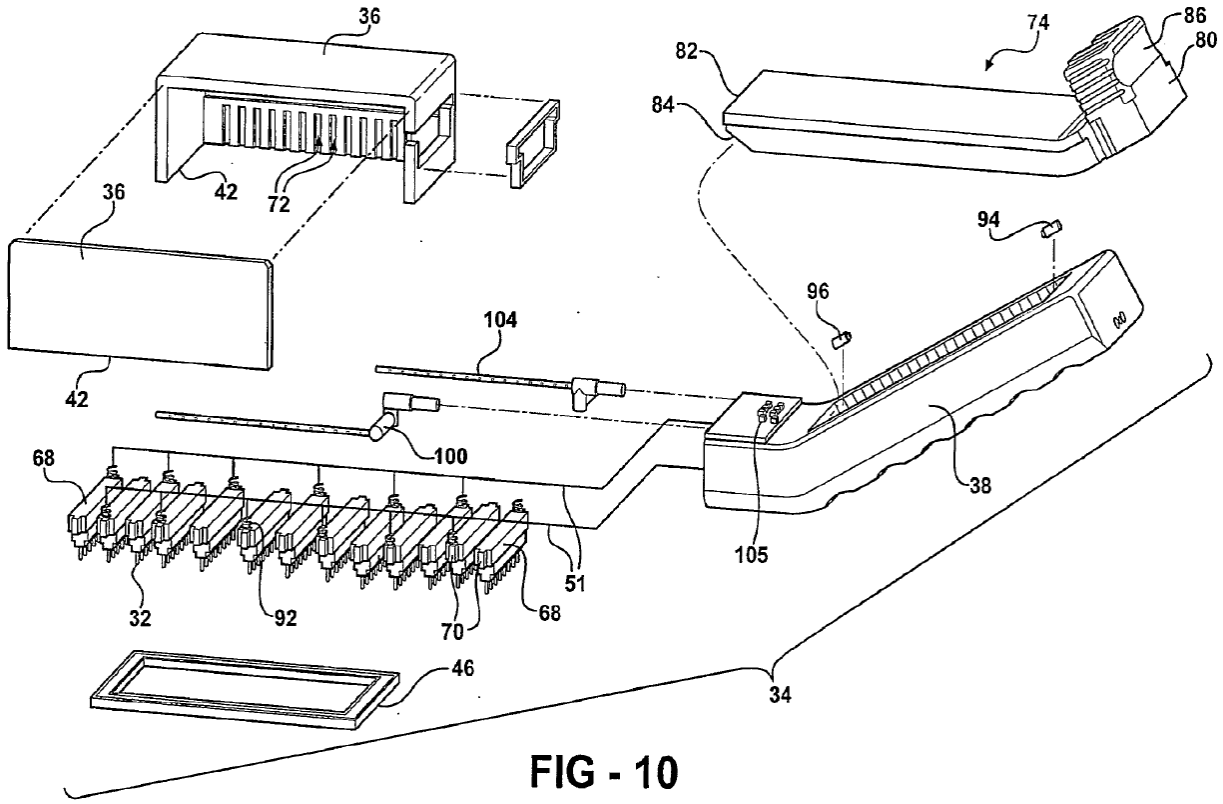

Livneh—Fig. 10

It would have been a matter of routine engineering to make these electrical connections releasably couplable at the connection point between the housing 36 and the handle portion 38, *e.g.*, by using electrical standard off-the-shelf connectors, which provide electrical contacts, as required by the claims of the ’812 patent. Also, a POSA would also recognize that some of the electrical component—such as, the sensors 94 and 96 sense the position of the mechanism 74 (Ex-1010, ¶46), and the pushbuttons 105 control operation of the apparatus 30 (*id.*, ¶53)—can be located entirely in the handle portion, as suggested by Livneh. Ex-1010, Fig. 1, Fig. 2 (reproduced below), ¶46 (“at least one sensor 94, 96 is

implemented as a first proximity sensor 94 disposed adjacent one longitudinal end of the channel 76 and a second proximity sensor 96 disposed adjacent the other longitudinal end of the channel 76"), ¶53 ("the pushbuttons 105 are electrically connected to the controller 52").

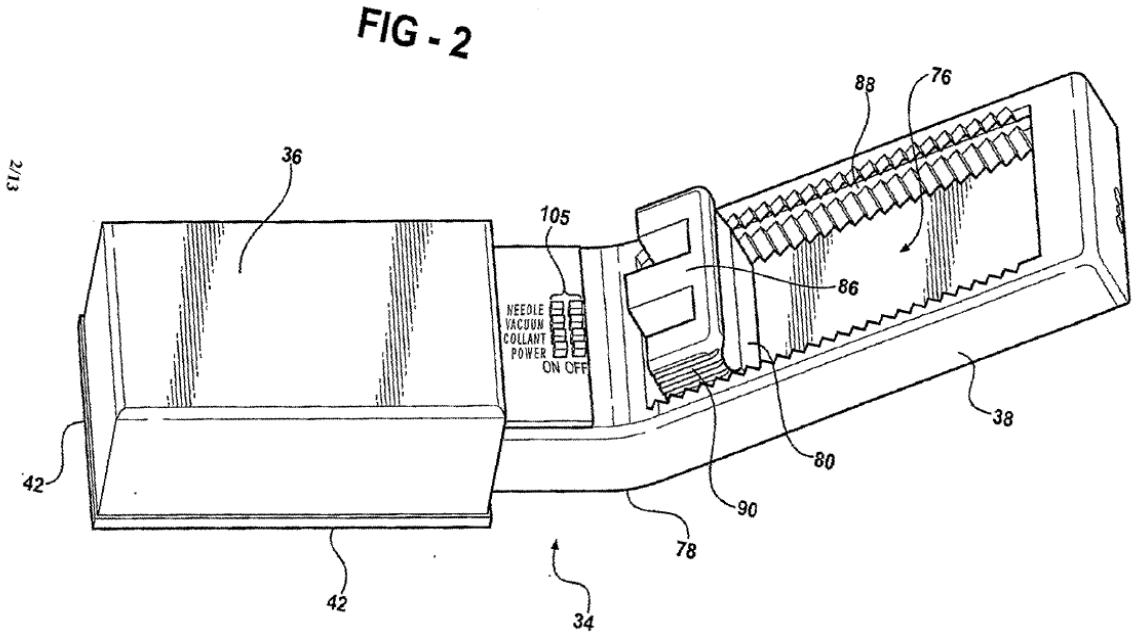

Livneh—Fig. 2

214. For example, Mehta discloses "the electrodes 104 in the electrode assembly 102 having connection or contact portions 116 that couple to a connection board on a treatment unit to provide an electrical pathway from the power supply to the electrodes 104." Ex-1006, 15:55–59. Specifically, Mehta discloses that "connection portions 116 comprise spring contacts or spring pins," and "maintain contact with a corresponding contact point trace on a connection board during movement of the electrode assembly 102." *Id.*, 16:12–18.

Furthermore, because the removable cartridge 100 couples to the proximal end of the handpiece/device body 210, and because the interface between the removable cartridge 100 and the handpiece/device body 210 is located at the proximal end thereof, the contact point trace/connection board is included on the proximal end of the handpiece/device body 210. It would have been a matter of routine engineering to apply Mehta's teachings to Livneh's device to provide an electrical connection between the removable needle module and the handpiece.

215. Mehta further teaches that "multiple connection portions 116 and 117 can be electrically insulated from one another to increase the number of configurations possible with the electrode assembly" Ex-1006, 16:67–17:3. For example, the proximal connection portion 116 can electrically couple to a temperature detecting circuit while the distal connection portion 117 can connect to a power delivery circuit only upon distal advancement of the needle assembly 102 so that the temperature of the electrodes can be continuously monitored while the power delivery to the electrodes can be limited to distal advancement of the assembly. *Id.,* 17:3–11.

216. As for the mechanical connections, the vacuum manifold 100 and the coolant manifold 104 in the handheld unit 34 in Livneh are connected to the vacuum pump 98 and coolant supply 102 in the control unit 48, respectively. Ex-1010, Fig. 1. It would also have been a matter of routine engineering make these

mechanical parts releasably couplable at the connection point between the housing 36 and the handle portion 38 by adding standard off-the-self connectors for vacuum lines and fluid circulation. For example, Mehta discloses a vacuum source included in the system. Ex-1006, 12:15–17. Mehta further discloses that the tissue engaging surface 106 can be "located on or in the cartridge body" (Ex-1006, 4:63–66) and "may contain apertures or other features to allow improved engagement against tissue given the application of a vacuum" (*id.,* 12:59–61). Thus, a POSA would have known how to connect a vacuum line from the system to the needle cartridge.

217. Further, Mehta teaches that "any number of structures can be incorporated into the device to permit removable coupling of the cartridge body," for example via the action of retention fasteners. *See, e.g.*, Ex-1006, Figs. 2B, 2D, 4A and 3:63–64, 6:41–42, 14:5–7, 15:28–33; Section VIII.A.1(b). Thus, it would have been a matter of routine engineering to make the needle module "mechanically separable."

218. Accordingly, modifying Livneh's device to include a removable needle module ("Modified Livneh Device") in view of teachings of teachings of Mehta and the knowledge of a POSA and a method of treating dermatological tissue using the Modified Livneh Device ("Modified Livneh Method") would have been a matter of routine engineering and would have yielded predictable results,

and a POSA would have understood that there was a high likelihood of success in making the combination.

2. Independent Claim 12

219. As discussed in more detail below, Livneh in view of Mehta renders obvious claim 12 of the ’812 patent.

a) [12pre] An apparatus for treating dermatological tissue, comprising:

220. Livneh discloses an apparatus for treating dermatological tissue, specifically for appearance of younger and tighter skin by introducing thermal and mechanical injury to skin for skin via electrodes carrying an electric current. *See*, *e.g.*, Ex-1010, ¶¶2, 5, 32, 60. Accordingly, Livneh discloses [12pre].

b) [12a] a user holdable device including a proximal end and a releasably couplable deployable needle module, the releasably couplable deployable needle module mechanically separatably from the user holdable device proximal end and including a needle assembly including a plurality of needles,

221. Livneh discloses a user holdable device. Livneh provides a skin treatment apparatus 30 including a handheld unit 34 having a handle portion 38. Ex-1010, ¶33 (“The handle portion 38 designed to be held by an operator of the apparatus 30”).

222. The handheld unit 34 includes a needle module including a plurality of electrodes and other components, and this needle module is encased by a housing. Ex-1010, ¶33 (“a housing 36 for supporting and concealing the plurality

of electrodes 32 as well as other components."). Fig. 3 (reproduced below) shows that the needle module (designated by the red box) includes a needle assembly (designated by the blue box).

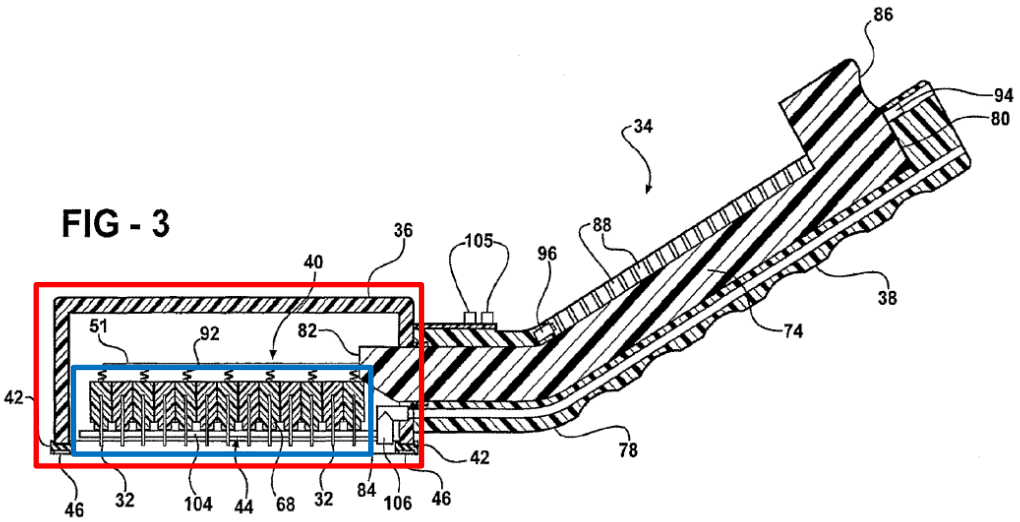

Livneh—Fig. 3 (annotated)

The needle assembly (in Fig. 3, reproduced above) includes at least a plurality electrodes 32, combs 62, holders 68, and coils 92. Ex-1010, ¶¶32, 47-49. Livneh discloses that "[e]ach electrode 32 is preferably shaped like a needle" and "convey(s) electrical current to the skin." Ex-1010, ¶¶40–41. Livneh discloses that the needle-shaped electrodes are "arranged into a plurality of combs 62," each of which is "supported by a holder 68," and that "the combs 62 and holders 68 are arranged in successive rows." Ex-1010, Figs. 7 and 10 (reproduced below), ¶¶47, 48. Livneh also discloses that coils 92 connects (*i.e.*, extends) from the top of each holder. Ex-1010, ¶49.

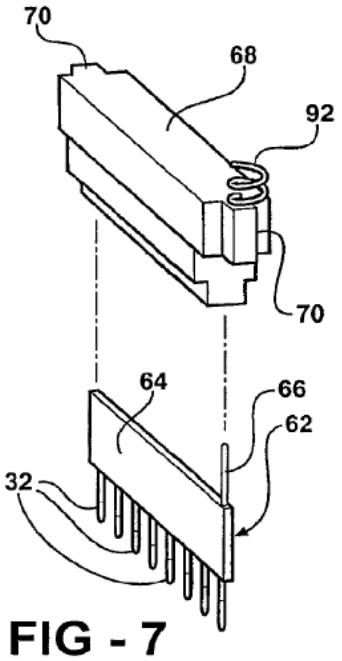

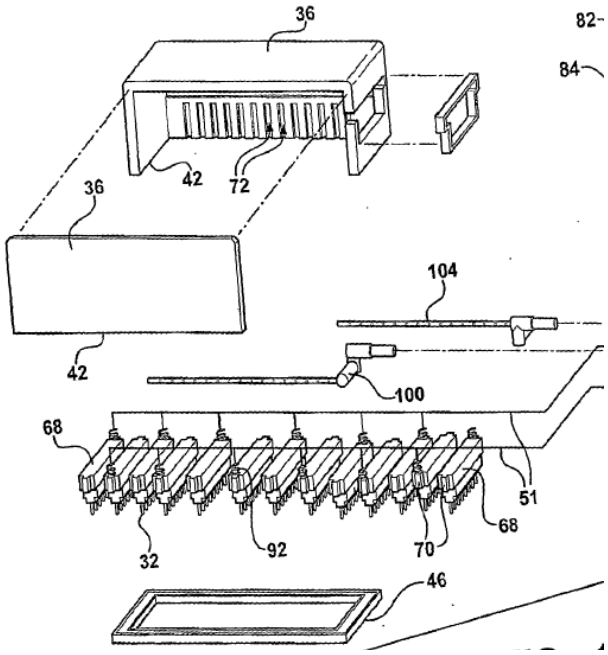

Livneh—Fig. 7 **Livneh—Fig. 10**

223. Livneh discloses that "[t]he edge 42 and/or the seal 46 [of the handheld unit 34] are disposable on the skin" and "the electrode 32 extends 'straight into' the skin at about 90 degree angle." Ex-1010, Fig. 3, ¶¶34–35. Livneh's user holdable device includes a portion (designated by the blue box in Fig. 3 of Livneh, reproduced below) that is designed to be positioned proximal to a patient's dermatological tissue during treatment.

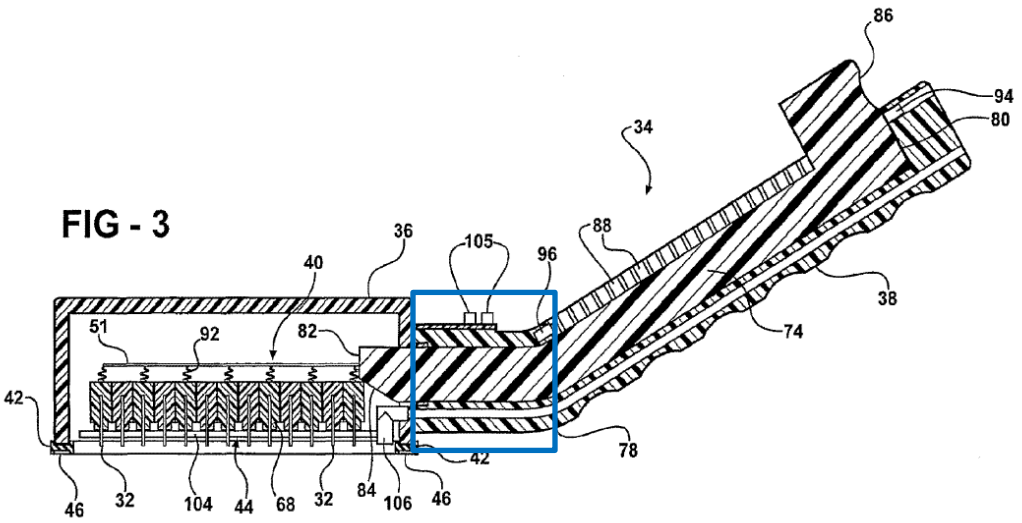

Livneh—Fig. 3

Specifically, during treatment of a patient's dermatological tissue (*e.g.*, skin on a patient's face or neck), a user would hold the handle portion 38, which is located at the right-hand side of the handheld unit 34 in Fig. 3 of Livneh, and position the proximal end of handheld unit 34 near the dermatological tissue to be treated such that the edge 42 and/or the seal 46 engage the dermatological tissue near a treatment region. Accordingly, the handheld unit 34 includes a "proximal end" as recited by claim 12 of the '812 patent.

224. In Livneh, "[t]he housing 36 is connected to a handle portion 38." Ex-1010, ¶33. A POSA would have been motivated to make the connection between the housing 36 and the handle portion 38 in Livneh "releasably couplable" and "mechanically separable" from the proximal end of the handle portion 38 for the reasons explained in Section VIII.F.1.

225. Accordingly, the Modified Livneh Device discloses [12a].

c) [12b] the needle assembly movable within the releasably couplable deployable needle module to extend the plurality of needles from the releasably couplable deployable needle assembly end surface

226. Livneh's handheld device includes a plurality of needles 32 that extend into a patient's skin and provide for percutaneous delivery of energy (*e.g.*, RF energy) to dermatological tissue. Ex-1010, ¶35 ("the electrode 32 extends 'straight into' the skin at about 90 degree angle"), ¶37 ("a cable . . . or other electrical connection allows transmission of the RF signal from the power supply 50 in the control unit 48 to the electrodes 32 in the handheld unit 34"). In the handheld device, the microneedles are extendable from a first position (*i.e.*, retracted position) to a second position (*i.e.*, extended position). Ex-1010, ¶¶42–43.

227. As discussed above, the needle assembly in Livneh is within the needle module. *Supra* Section VIII.F.2.b). Therefore, when the needle module is released and decoupled from the proximal end of handheld unit 34, the needle assembly is also released and decoupled. Conversely, when the needle module is coupled to the proximal end of the handheld unit 34, the needle assembly 102 is also coupled to the proximal end of the handheld unit 34. Accordingly, the needle assembly of the Modified Livneh Device is releasably couplable.

228. In Livneh's handheld unit 34, the needle assembly (designated by the blue box in Figs. 3 and 4 reproduced below) moves within the needle module

(designated by the red box in the same figures) between a retracted position and an extended position.

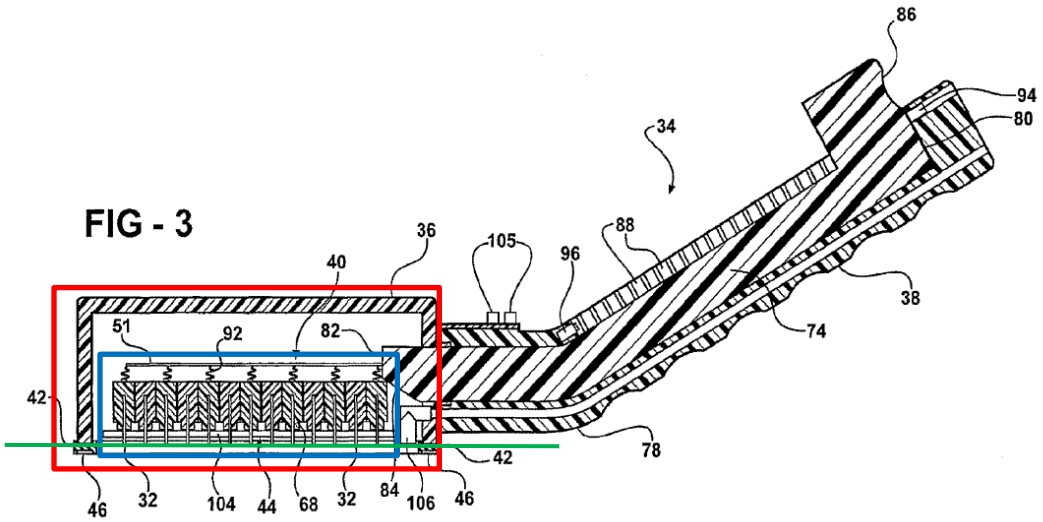

Livneh—Fig. 3 (annotated, needles retracted)

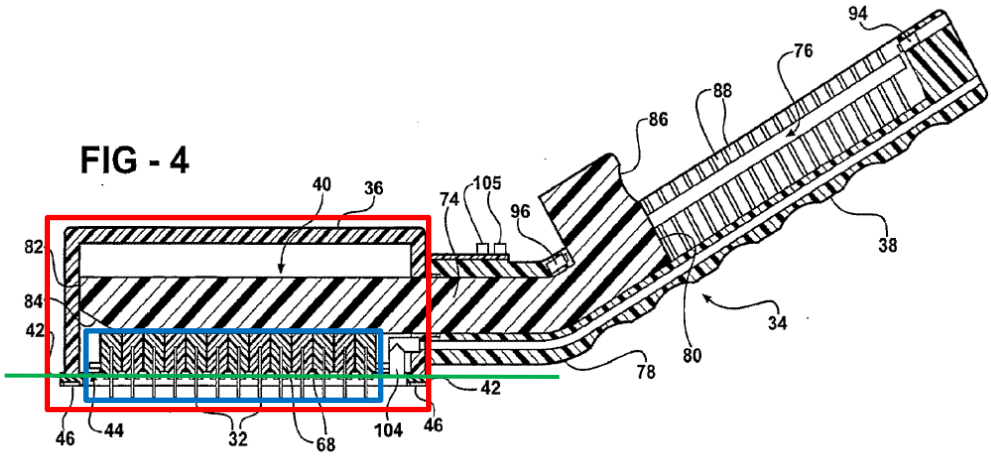

Livneh—Fig. 4 (annotated, needles extended)

229. As discussed *supra* Section VI.E.2, the term "a deployable needle assembly end surface" has been construed in the ITC Lawsuit—in a manner consistent with the meaning that term would have had to a POSA—to mean:

> The deployable needle assembly end surface is the plane defined by the tips of the needles of the deployable needle assembly when the needles are not extended, the needle assembly can be movable within a needle module that is releasably couplable to the proximal end of a user holdable device.

The definition of "deployable needle assembly end surface" provided in the ITC Lawsuit corresponds to the retracted tip plane, *i.e.*, the plane that extends along the tips of the needles when they are in the retracted position, designated by the green lines in Figs. 3 and 4 (reproduced above). When the needle assembly is in the retracted position, the tips of the needles define a retracted tip plane, *i.e.*, a plane that extends along the tip of each of the retracted needles, designated by the green lines shown in the Figs. 3 and 4 above. As shown in these figures, that plane may lie slightly behind the skin contact plane of the needle module. The plurality of electrodes 32 are extended from this plane, as the needle assembly slides relative to the housing 36.

230. Because the electrodes 32 are extendable from the retracted tip plane, as discussed above, the electrodes 32 "extend from the releasably couplable deployable needle assembly end surface," as recited by claim 12 of the '812 patent. Accordingly, the Modified Livneh Device discloses [12b].

d) [12c] while at least one electrical contact of the needle assembly remains electrically coupled to at least one electrical contact of the user holdable device proximal end.

231. In the handheld device of Livneh, an electrical pathway is provided for transmitting electrical power from the power supply 50 to the electrodes 32, *i.e.*, needles. *See*, *e.g.*, Ex-1010, Fig. 1, ¶37. Because (i) the electrodes 32 are part of a needle assembly that is a component of the needle module (*see* Section VIII.F.2.b)) and (ii) a cable or other electrical connection allows transmission of the RF signal from the power supply 50 in the control unit 48 to the electrodes 32 in the handheld unit 34 (Ex-1010, ¶37), the electrical pathway between the power supply and the electrodes extends via electrical contacts between needle assembly and the proximal end of the handle portion in order for electrical power to be delivered from the power supply to the electrode 32.

232. Livneh discloses an electrical pathway between the electrodes 32 and the power supply 50. For example, Livneh discloses that "[o]ne or more wires 51 are preferably disposed within the housing 36 of the handheld unit 34 to conduct the RF signal within the handheld unit 34." Ex-1010, ¶37, Fig. 10 (reproduced below).

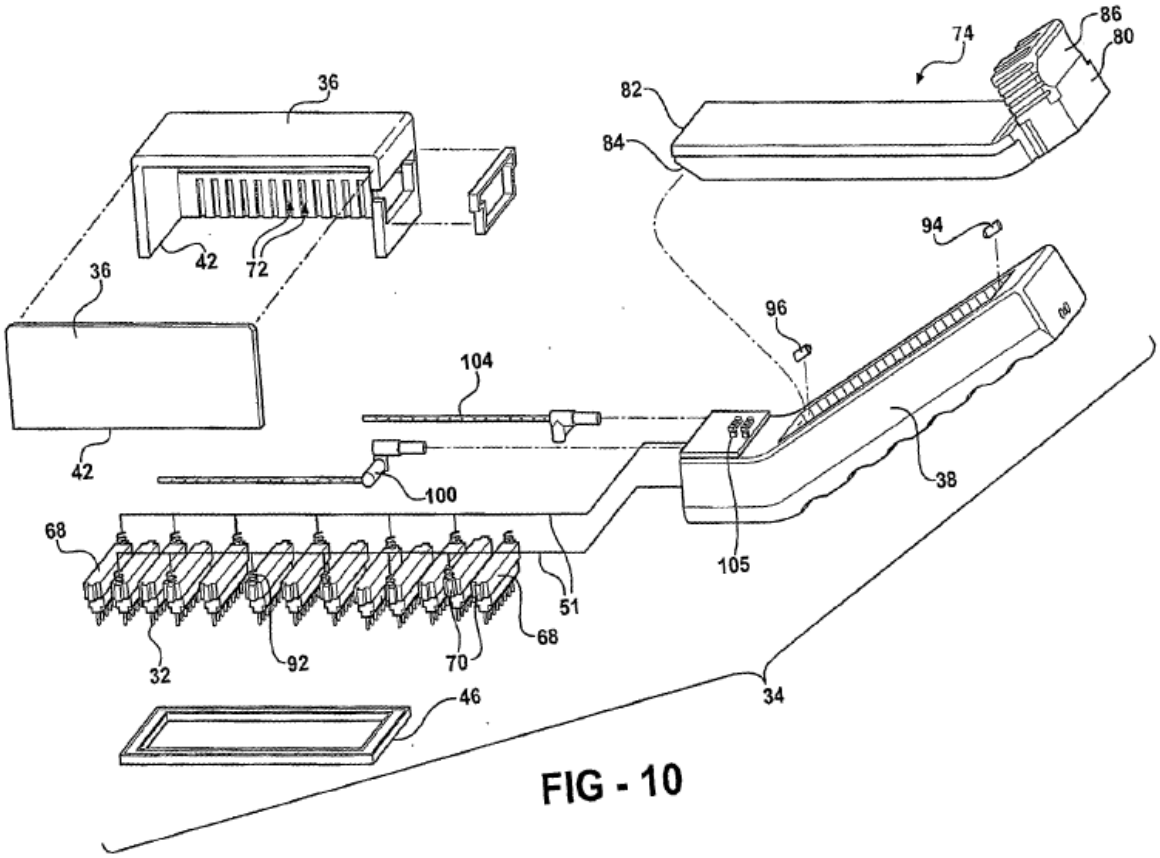

Livneh—Fig. 10

Livneh discloses that the electrodes 32 are arranged into a plurality of combs 62 (Ex-1010, ¶47), and wires 51 provide electrical connection between the combs 62 and the power supply 50 via coils 92 (Ex-1010, ¶49). In the bipolar configuration, "the coil 92 of each holder 68 in successive rows alternates between the two wires 51, where one wire 51 provides a supply path from the power supply 50 and the other wire 51 provides a return path." Ex-1010, ¶49, Fig. 10. In the monopolar configuration, "only one wire 51 is utilized as a supply path." Ex-1010, ¶49, Fig. 11.

233. In the Modified Livneh Device, in order for an electrical pathway that provides for transmission of electrical power from the power supply to the electrodes, there must be at least one electrical contact disposed on the proximal end of the handle portion such that, when the Device is coupled thereto, said at least one electrical contact contacts a corresponding at least one electrical contact disposed on the needle module or a component thereof, *e.g.*, needle assembly. Thus, at least one electrical contact disposed on the needle assembly and at least one electrical contact disposed on the proximal end the proximal end of the handheld unit 34 are coupled to one another to provide an electrical connection therebetween. Accordingly, the Modified Livneh Device discloses [12c].

* * *

234. For the foregoing reasons in Sections VIII.F.2.a)–VIII.F.2.d), the combination of Livneh, Mehta, and the knowledge of a POSA renders claim 12 obvious.

3. Dependent Claim 18

235. Claim 18 recites the apparatus of claim 12, "wherein one of the at least one electrical contacts includes a pin that is extendable in the same direction as the plurality of needles."

236. Livneh discloses that the electrodes 32 are arranged into a plurality of combs 62 (Ex-1010, ¶¶15–17, 47, Figs. 6–8), and the coil 92 electrically connects

the comb to one of the wires 51, which in turn provides electrical connection to the power supply 50 (*id.,* ¶49).

237. Livneh further discloses that the coil 92 is an electrical contact, which is a pin that is extendable in the same direction as the plurality of needles. The coil 92 is extendable to allow the needle-shaped electrodes to remain connected to the power supply when being moved between their retracted and extended positions. As illustrated in Fig. 7 (reproduced below), the coil 92 (designated by the blue box in Fig. 7) is normally in a compressed position. As illustrated in Figs. 9 and 10 (reproduced below) the top end of the coil 92 is connected to the wire 51, and the wire is affixed in the groove on either side of the wall of the housing (as designated by the red boxes in FIG. 9 below). As explained above, the bottom end of the coil is connected to the electrodes, *e.g.*, via the comb 62. *Id.,* ¶¶15–17, 47, Fig. 9. Livneh discloses that "[w]hen the vacuum is sufficient, the electrode positioning mechanism 74 is pushed inwards towards the cavity 40. The mechanism 74 engages the electrodes 32, moving them from the first position to the second position. The electrodes 32 penetrate the skin during this movement." *Id.,* ¶54. When the electrodes 32 are extended and elongated downwards to be inserted into the skin, the coil 92 is also extended downwards (*i.e.*, the coil 92 is extended in the same direction as the electrodes). *Id.*, Fig. 9 (reproduced below).

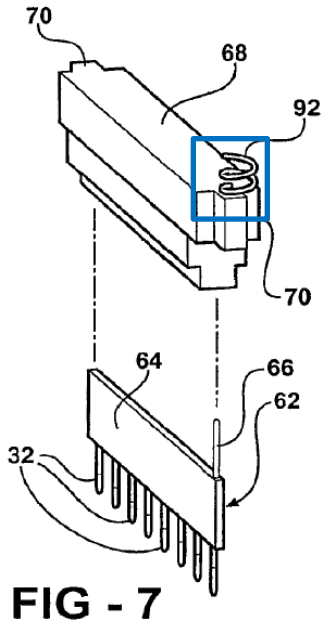

Livneh—Fig. 7

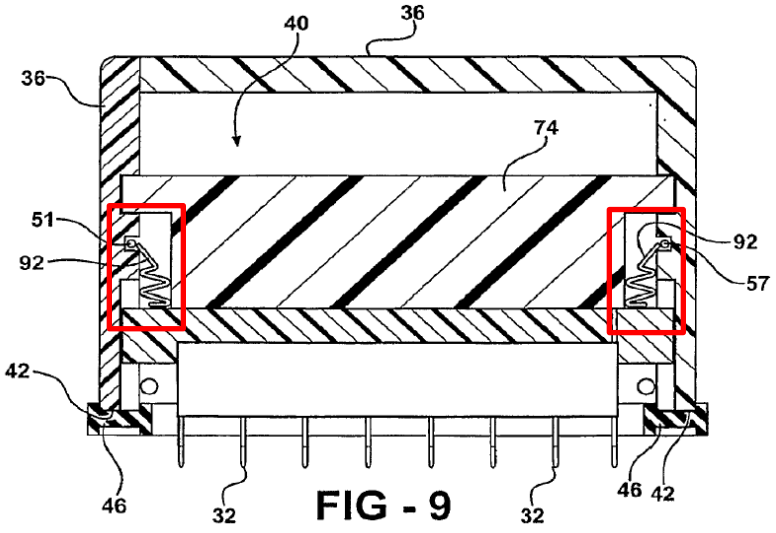

Livneh—9[6]

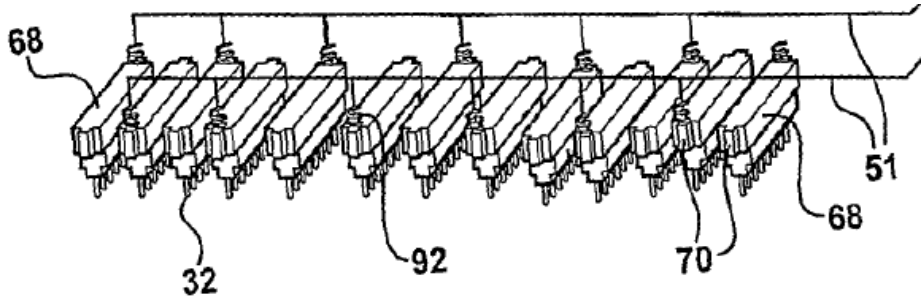

Livneh—Fig. 10

In this configuration, the coil 92 must extend in the same direction as the electrodes to ensure the electrical contact between the electrodes and the wire 51 because the top end of the coil 92 is connected to the wire 51 which is affixed on the wall of the housing and the bottom end is connected to the electrodes that move

[6] The number 57 on Fig. 9 should be 51 in light of the description in the specification and FIG. 10 of Livneh.

from the first to the second position. *Id.* A POSA would have understood that when mechanism 74 is retracted after the treatment is over, the coil 92 will return to its original compressed position by its tension and retract and pull the electrodes 32 back from the second position to the first position. Therefore, the coil 92 is an electrical contact that is extendable in the same direction as the plurality of needles.

238. Coil 92 in Livneh operates in the same manner and performs the same function as electrical contact pin 924G depicted in Figures 11A, 11B, and 11C of the ’812 patent. Figure 11A shows that “the electrical contact pin 924G is sized to fit within the spring loaded based 924H. In an embodiment the internal spring 924M (Fig. 11C) may force extension of the pin 924G to maintain electrical conduction with the MLM 922 as the needle assembly 924F is moved (recessed and deployed to various depths).” Ex-1001, 13:21–26. In this configuration, the internal spring 924M is extended in the same direction as the needles when they are extended and inserted into the skin.

239. Accordingly, Livneh discloses the additional limitations in claim 18, and the combination of Livneh, Mehta, and the knowledge of a POSA renders obvious claim 18.

4. Dependent Claim 19

240. Claim 19 recites the apparatus of claim 12, “wherein one of the user

holdable device proximal end and the needle assembly includes at least two extendable electrical contacts and the other includes at least two electrical contacts couplable to the at least two extendable electrical contacts."

241. As discussed in Section VIII.F.2.b), Livneh's needle assembly includes the coils 92. As discussed in Section VIII.F.3, the coils 92 are extendable electrical contacts. Livneh discloses that there is a plurality of coils in the needle assembly, with each coil connected to a plurality of electrodes. *See, e.g.*, Ex-1010, Figs. 10–11. Therefore, the needle assembly includes at least two extendable electrical contacts.

242. As discussed in Section VIII.F.1, the Modified Livneh Device has the proximal end which has electrical contacts for wires 51. In the bipolar configuration, there are two wires 51, one wire providing a supply path and the other wire providing a return path. Ex-1010, ¶49, Fig. 10. And, these wires are connected to power supply 50. *Id.* Therefore, the proximal end of the user holdable device has at least two electrical contacts for the two wires 51 in the bipolar configuration, and these electrical contact should be connected to the coils 92 to provide an electrical pathway from the electrodes 32 to the power supply 50. *Id.*; Section VIII.F.1.

243. Accordingly, the combination of Livneh, Mehta, and the knowledge of a POSA discloses the additional limitations in claim 19, and for the reasons set

forth *supra* Section VIII.F.1, the combination of Livneh, Mehta, and the knowledge of a POSA renders obvious claim 19.

5. Dependent Claim 20

244. Claim 20 recites the apparatus of claim 12, "wherein one of the at least one electrical contacts is extendable."

245. As discussed in Section VIII.F.2.b), Livneh's needle assembly includes the coils 92. As discussed in Section VIII.F.3, the coils 92 are extendable electrical contacts.

246. Accordingly, Livneh discloses the additional limitations in claim 20, and for the reasons set forth *supra* Section VIII.F.1, the combination of Livneh, Mehta, and the knowledge of a POSA renders obvious claim 20.

6. Independent Claim 1

247. As discussed in more detail below, Livneh in view of Mehta renders obvious claim 1 of the '812 patent.

a) [1pre] A method of treating dermatological tissue, comprising:

248. Livneh discloses methods for treating dermatological tissue, specifically for appearance of younger and tighter skin by introducing thermal and mechanical injury to skin for skin via electrodes carrying an electric current. *See*, *e.g.*, Ex-1010, ¶¶2, 5, 32, 60.

249. Accordingly, Livneh discloses [1pre].

b) [1a] placing a user holdable device releasably couplable deployable needle module end surface on or near dermatological tissue to be treated,

250. Livneh's methods for treating dermatological tissue involve placing a microneedling device, which is holdable by a user, against a patient's skin and inserting microneedles into the patient's skin to apply treatment thereto. Ex-1010, ¶¶34-35.

251. As discussed *supra Section* VI.E.1, the term "a user holdable device releasably couplable deployable needle module end surface" has been construed in the ITC Lawsuit—in a manner consistent with the meaning that term would have had to a POSA—to mean:

> the end surface of the deployable needle module past which needles can be extended, the module is releasably couplable to a user holdable device proximal end.

252. Livneh discloses a user holdable device. Livneh provides a skin treatment apparatus 30 including a handheld unit 34 having a handle portion 38. Ex-1010, ¶33 ("The handle portion 38 designed to be held by an operator of the apparatus 30").

253. The handheld unit 34 includes a needle module (designated by the red box in Fig. 3 of Livneh, reproduced below) including a plurality of electrodes and other components, and this needle module is encased by a housing. Ex-1010, ¶33 ("a housing 36 for supporting and concealing the plurality of electrodes 32 as well

as other components.”). Livneh discloses that “[t]he edge 42 and/or the seal 46 [of the handheld unit 34] are disposable on the skin” and “the electrode 32 extends ‘straight into’ the skin at about 90 degree angle.” Ex-1010, Fig. 3, ¶¶34–35. Livneh also discloses that “[t]he edge includes a plurality of edge segments that are coplanar with one another” (Ex-1010, ¶34) and “[b]y providing a substantially flat edge, a defined area of skin may be treated with the electrodes” (*id.*, ¶8). Thus, the end surface of the Livneh’s needle module is the plane defined by the edge segments contacting the skin surface (designated by the green lines in Figs. 3 and 4 of Livneh, reproduced below) that is designed to be positioned on or near a patient’s dermatological tissue during treatment.

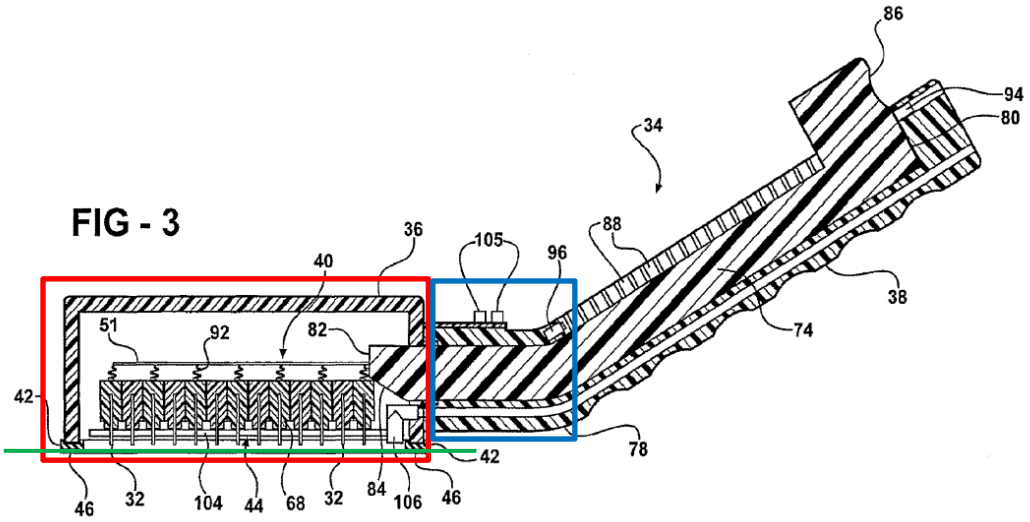

Livneh—Fig. 3 (annotated, needles retracted)

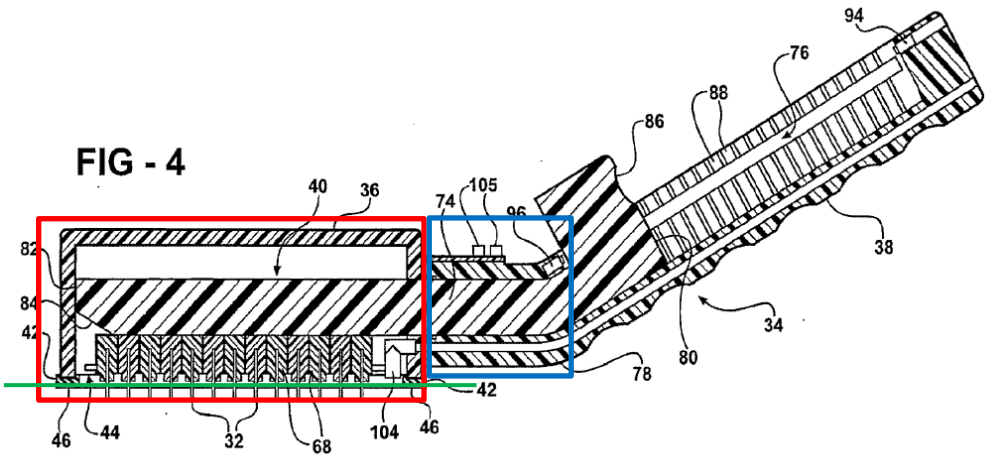

Livneh—Fig. 4 (annotated, needles extended)

When the electrodes are extended, the electrodes past the bottom surface of the needle module, as illustrated by Fig. 4 (reproduced and annotated above).

254. During treatment of a patient's dermatological tissue (*e.g.*, skin on a patient's face or neck), a user would hold the handle portion 38, which is located at the right-hand side of the handheld unit 34 in Fig. 3 of Livneh, and position the proximal end (designated by the blue box in Fig. 3 reproduced above) of the handle portion near the dermatological tissue to be treated such that the edge 42 and/or the seal 46 engage the dermatological tissue near a treatment region. Accordingly, the handle portion 38 includes a "proximal end" as recited by claim 1 of the '812 patent.

255. As explained in Section VIII.F.1, a POSA would have been motivated to make the connection between the housing 36 and the handle portion 38 in

Livneh (Ex-1010, ¶33) "releasably couplable" from the proximal end of the handle portion 38. Accordingly, Livneh's needle module modified by teachings of Mehta and the knowledge of a POSA is releasably couplable. Therefore, the Modified Livneh Method discloses [1a].

c) [1b] the user holdable device including a proximal end and the releasably couplable deployable needle module, the releasably couplable deployable needle module mechanically separatably from the user holdable device proximal end and including a needle assembly including a plurality of needles,

256. The Modified Livneh Method discloses [1b]. *Supra* Section VIII.F.2.b).

d) [1c] the needle assembly movable within the releasably couplable deployable needle module to extend the plurality of needles from the releasably couplable deployable needle assembly end surface

257. The Modified Livneh Method discloses [1c]. *Supra* Section VIII.F.2.c).

e) [1d] while at least one electrical contact of the needle assembly remains electrically coupled to at least one electrical contact of the user holdable device proximal end; and

258. The Modified Livneh Method discloses [1d]. *Supra* Section VIII.F.2.d).

f) [1e] communicating electrical signals from the user holdable device proximal end to the needle assembly via the electrical contacts.

259. As discussed in Sections VIII.F.2.d) and VIII.F.4, in the Modified Livneh Device, at least one electrical contact of the needle assembly of Livneh remains electrically coupled to at least one electrical contact of the user holdable device proximal end. Further, Livneh discloses the "a cable…or other electrical connection allows transmission of the RF signal from the power supply 50 in the control unit 48 to the electrodes 32 in the handheld unit 34," via wires 51. Ex-1010, ¶37. Thus, the Modified Livneh Method communicates (*i.e.*, transmits) electrical signals (*i.e.*, RF signals) from the user holdable device proximal end to the needle assembly via electrical contacts. Accordingly, the Modified Livneh Method discloses each and every element of this limitation. Therefore, the combination of Livneh and Mehta renders this limitation obvious.

* * *

260. For the foregoing reasons in Sections VIII.F.6.a)–VIII.F.6.f), the combination of Livneh, Mehta, and the knowledge of a POSA renders claim 1 obvious.

7. Dependent Claim 7

261. Claim 7 recites the method of claim 1, "wherein one of the at least one electrical contacts is extendable."

262. For the reasons set forth *supra* Section VIII.F.5, Livneh discloses the additional limitation of claim 7. Therefore—and for the reasons set forth *supra* Section VIII.F.6— the combination of Livneh, Mehta, and the knowledge of a POSA renders obvious claim 7.

8. Dependent Claim 9

263. Claim 9 recites the method of claim 1, "wherein one of the at least one electrical contacts includes a pin that is extendable in the same direction as the plurality of needles."

264. For the reasons set forth *supra* Section VIII.F.3, Livneh discloses the additional limitation of claim 9. Therefore—and for the reasons set forth *supra* Section VIII.F.6— the combination of Livneh, Mehta, and the knowledge of a POSA renders obvious claim 9.

9. Dependent Claim 10

265. Claim 10 recites the method of claim 1, "wherein a first electrical contact of the at least one electrical contact is electrically coupled to a first plurality of the plurality of needles and a second electrical contact of the at least one electrical contact is electrically coupled to a second, different plurality of the plurality of needles."

266. Livneh discloses energizing its respective microneedles to provide RF energy to a patient's dermatological tissue in a bipolar mode of operation. Ex-

1010, ¶¶39, 49. Specifically, Livneh discloses that "in bipolar operation, as shown in Figure 1," which is reproduced below, "the RF signal is applied through a first set 54 of the electrodes 32 and utilizes a second set 56 of electrodes as a return path to the power supply 50." Ex-1010, ¶39.

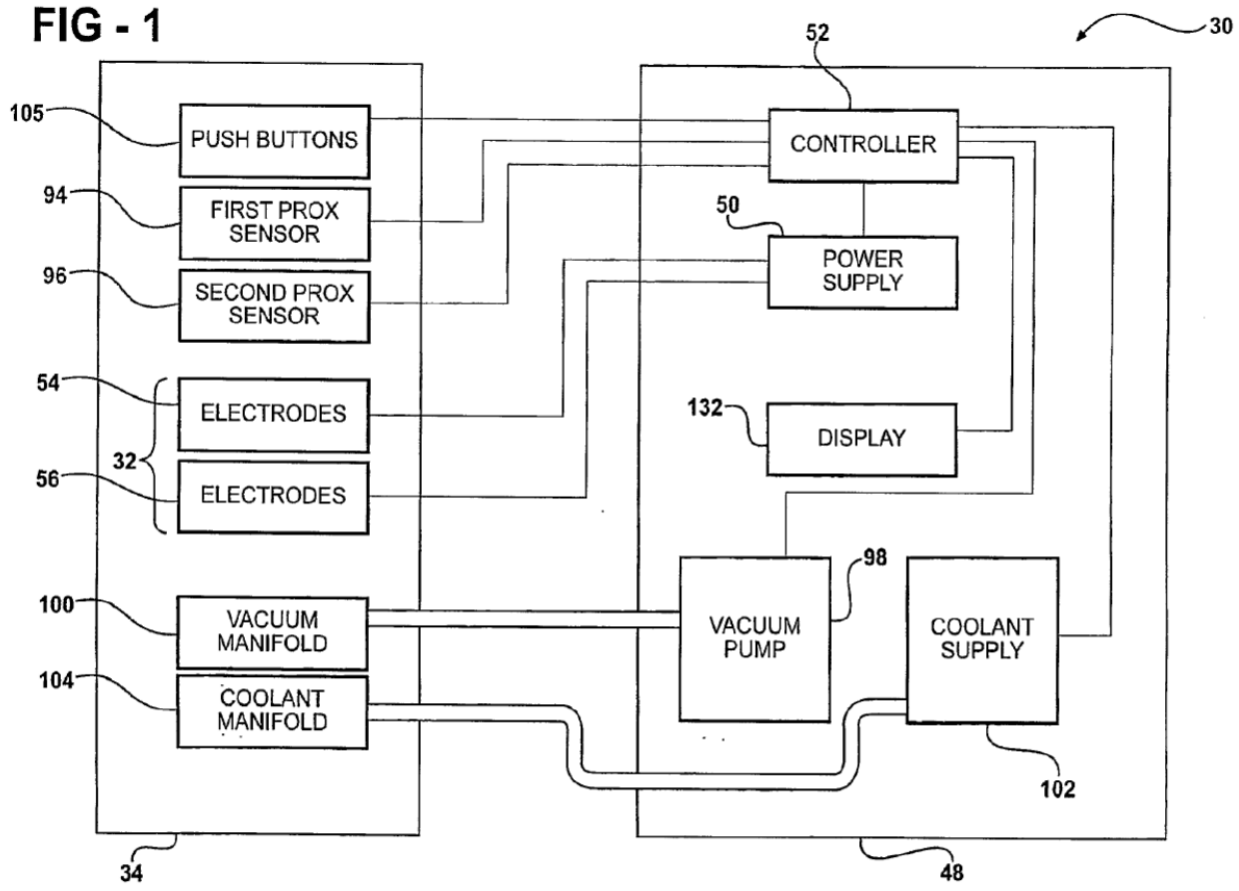

Livneh—Fig. 1

267. Livneh further teaches that "[i]n the bipolar configuration, as shown in Figure 10," which is reproduced below, "the coil 92 of each holder 68 in successive rows alternates between the two wires 51, where one wire 51 provides a supply path from the power supply 50 and the other wire 51 provides a return

path." Ex-1010, ¶49.

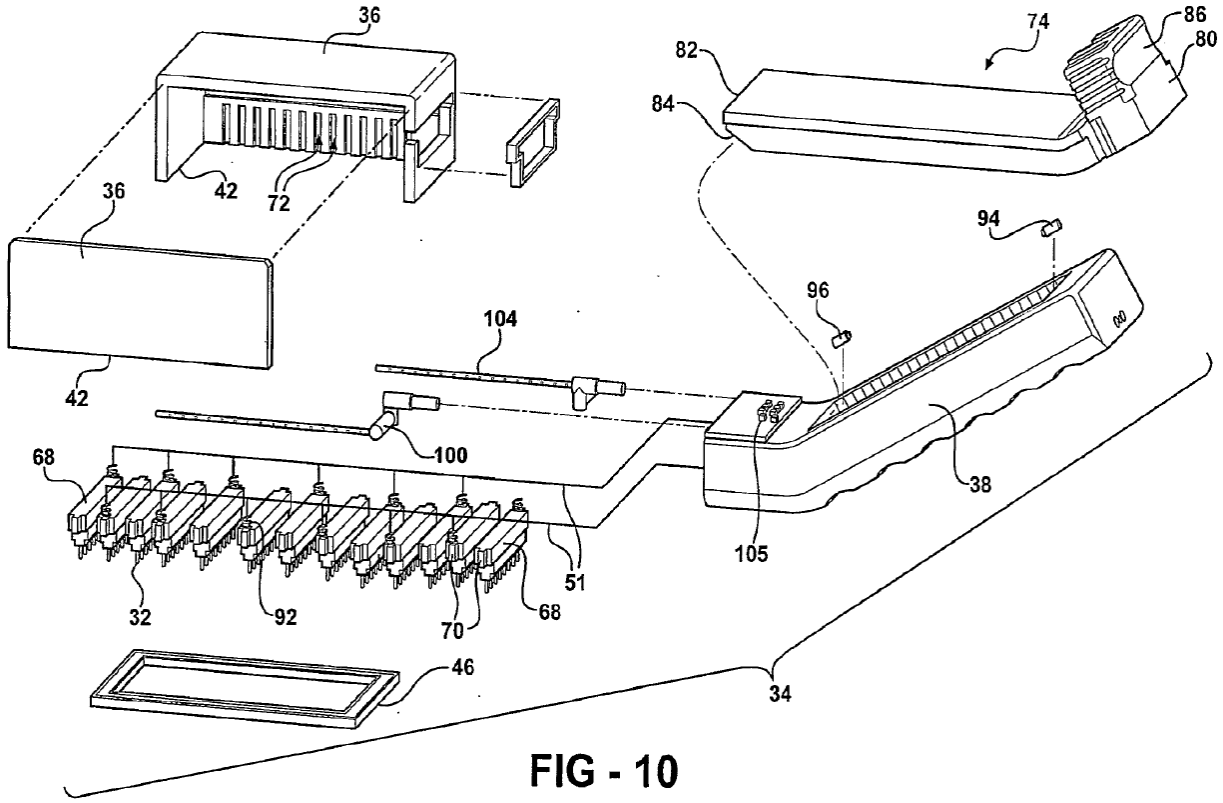

FIG - 10

Livneh—Fig. 10

Therefore, Livneh discloses that a first electrical contact of the at least one electrical contact (*i.e.*, a first coil 92 connected to the wire 51 that provides a supply path from the power supply) is electrically coupled to a first plurality of the plurality of needles (the needle-shaped electrodes 32 of a first comb 62 to which the first coil 92 is connected), and a second electrical contact of the at least one electrical contact of the at least one electrical contact (*i.e.*, a second coil 92 connected to the wire 51 that provides a return path from the power supply) is electrically coupled to a second, different plurality of the plurality of needles (the

needle-shaped electrodes 32 of a second comb 62 to which the second coil 92 is connected). Accordingly, Livneh discloses the additional limitations in claim 10. Therefore—and for the reasons set forth *supra* Section VIII.F.6—the combination of Livneh, Mehta, and the knowledge of a POSA renders obvious claim 10.

10. Dependent Claim 11

268. Claim 11 recites the method of claim 1, "wherein one of the user holdable device proximal end and the needle assembly includes at least two extendable electrical contacts and the other includes at least two electrical contacts couplable to at least two extendable electrical contacts."

269. For the reasons set forth *supra* Section VIII.F.4, Livneh discloses the additional limitation of claim 11. Therefore—and for the reasons set forth *supra* Section VIII.F.6— the combination of Livneh, Mehta, and the knowledge of a POSA renders obvious claim 11.

IX. AVAILABILITY FOR CROSS-EXAMINATION

270. In signing this declaration, I recognize that the declaration will be filed as evidence in a contested case before the Patent Trial and Appeal Board of the United States Patent and Trademark Office. I also recognize that I may be subject to cross examination in the case and that cross examination will take place within the United States. If cross examination is required of me, I will appear for cross examination within the United States during a time as mutually agreed

between the parties.

X. RIGHT TO SUPPLEMENT

271. I reserve the right to supplement my opinions in the future to respond to any arguments that the Patent Owner raises. This declaration represents only those opinions that I have formed to date. I reserve the right to revise, supplement, and/or amend my opinions stated herein based on new information that becomes available to me and on my continuing analysis of the materials already provided.

XI. JURAT

272. I declare that all statements made herein of my own knowledge are true and that all statements made on information and belief are believed to be true; and further that these statements were made with the knowledge that willful false statements and the like so made are punishable by fine or imprisonment, or both, under Section 1001 of Title 18 of the United States Code.

I, DANY BERUBE, declare under penalty of perjury under the laws of the United States of America that the foregoing is true and current.

Executed on January 19, 2024