US 20020120260A1

(19) United States

(12) Patent Application Publication (10) Pub. No.: US 2002/0120260 A1

Morris et al. (43) Pub. Date: Aug. 29, 2002

(54) TISSUE SURFACE TREATMENT APPARATUS AND METHOD

(76) Inventors: **David L. Morris**, Sydney (AU); **Steven A. Daniel**, Fremont, CA (US); **Daniel J. Balbierz**, Redwood City, CA (US)

Correspondence Address:
Joel Harris
967 North Shorline Boulevard
Mountain View, CA 94043 (US)

(21) Appl. No.: **09/797,409**

(22) Filed: **Feb. 28, 2001**

Publication Classification

(51) **Int. Cl.**[7] **A61B 18/18**

(52) **U.S. Cl.** **606/41**

(57) **ABSTRACT**

A tissue surface treatment apparatus includes a housing having a proximal end, a distal including a tissue contacting surface and an interior defined by the housing. A handpiece is coupled to the housing. The tissue contact surface has a plurality of apertures. An energy delivery device including at least one electrode is positionable in the housing interior. The at least one electrode includes a tissue penetrating distal end in substantial alignment with an aperture of the plurality of aperture. The at least one electrode is configured to be advanced from the housing interior through the aperture and into a target tissue site to define an ablation volume at least partly bounded by a tissue surface. An advancement device is coupled to the energy delivery device. The advancement device is at least partly positionable within at least one of the housing or the handpiece. The advancement device is configured to advance the at least one electrode from the housing interior into the target tissue site and completely withdrawal the at least one electrode into the housing interior. A cable is coupled to one of the housing or the energy delivery device. The cable is configured to be coupled to an energy source.

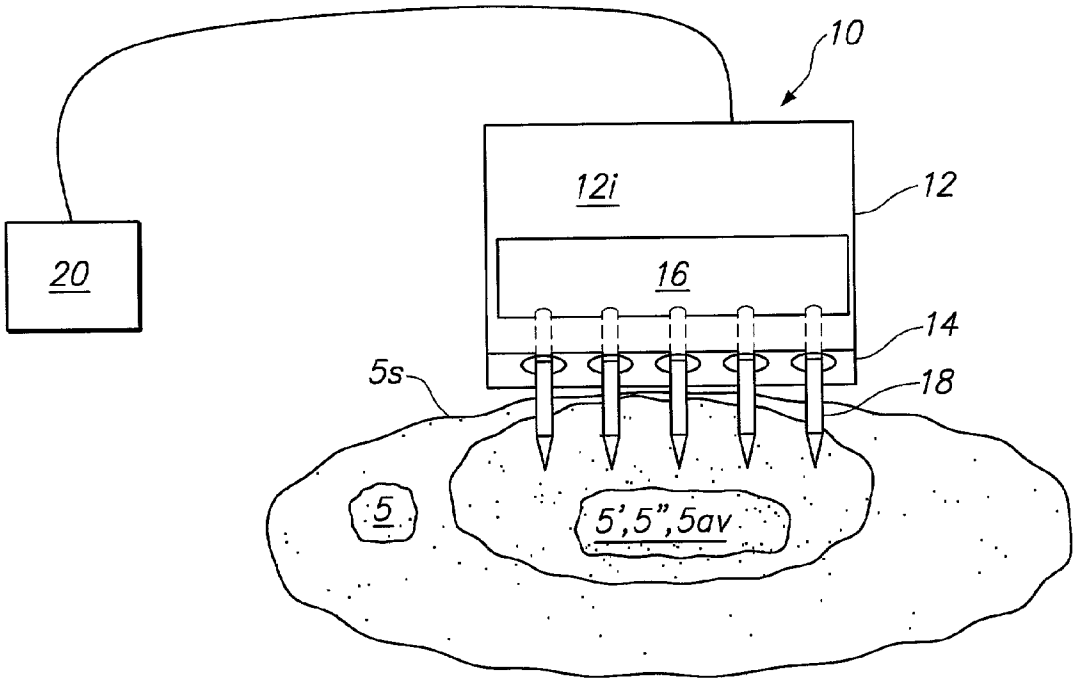

Serendia, LLC
Exhibit 2108
Jeisys v. Serendia
IPR2024-00463

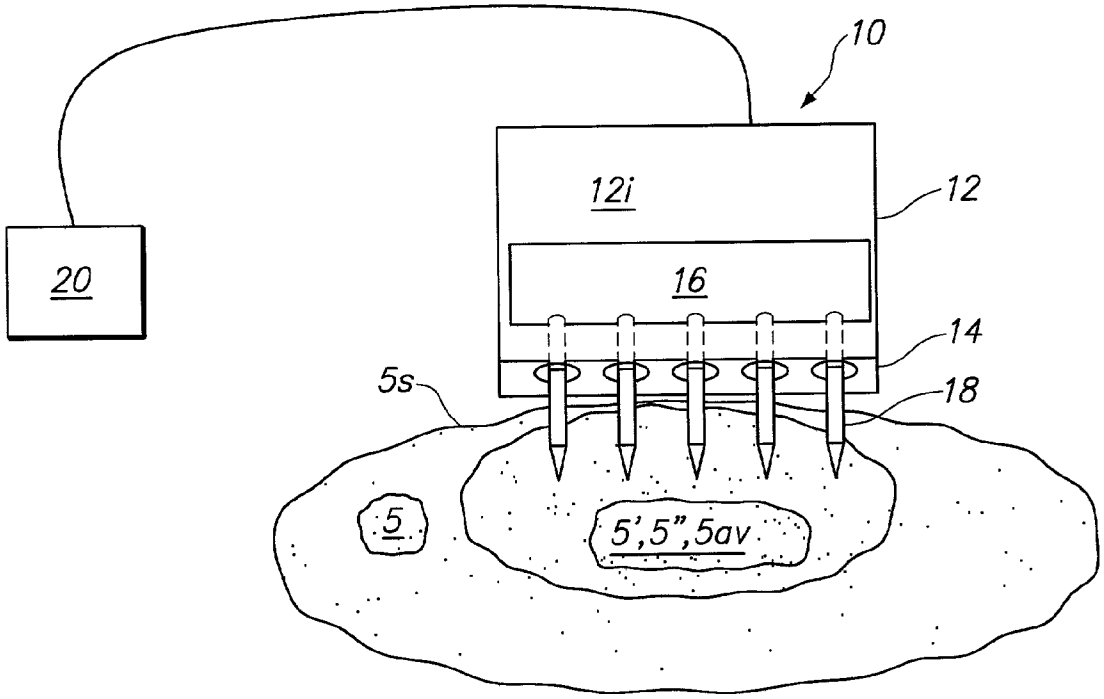
10
12i
12
20
16
14
5s
18
5
5',5",5av

FIG. 1

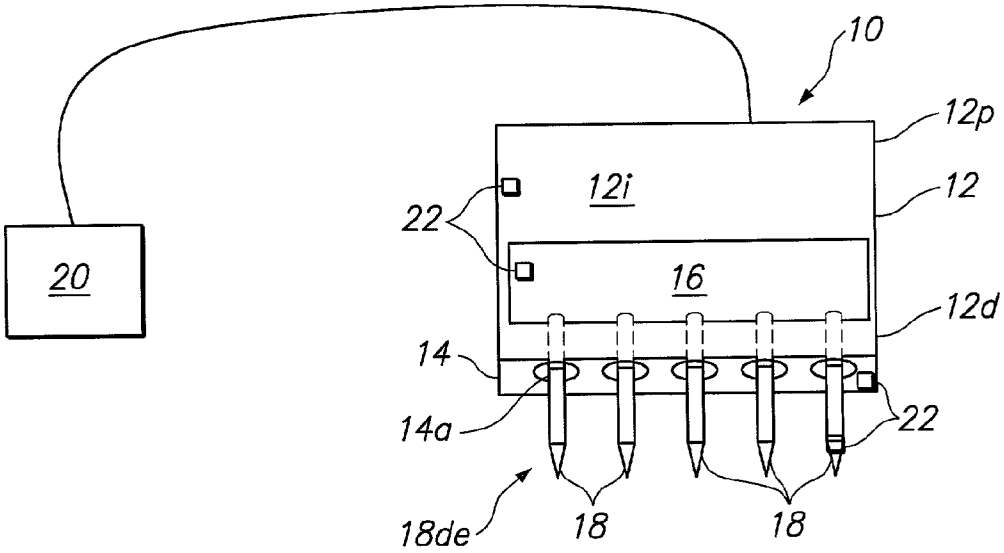
10
12p
12i
12
22
20
16
12d
14
14a
22
18de
18
18

FIG. 2

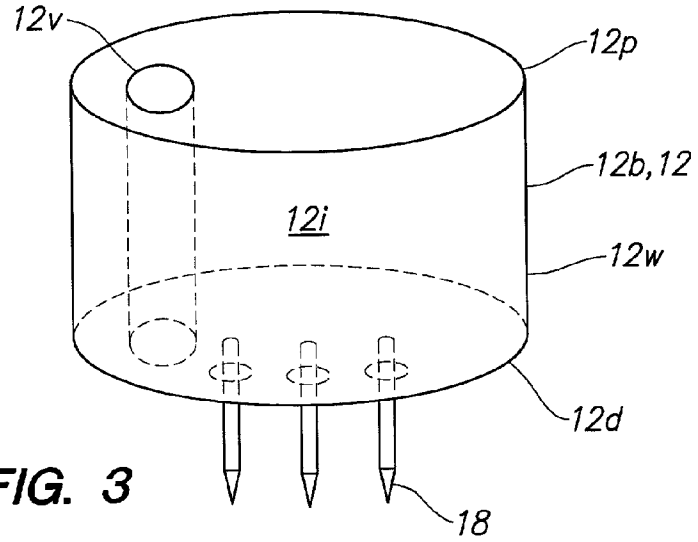

FIG. 3

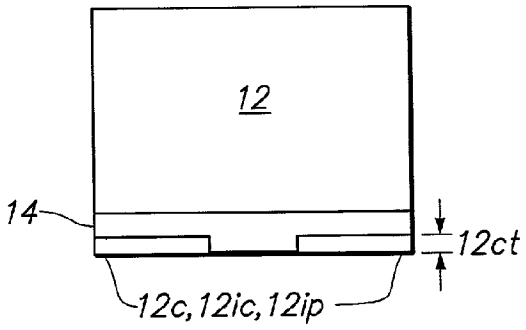

FIG. 4A

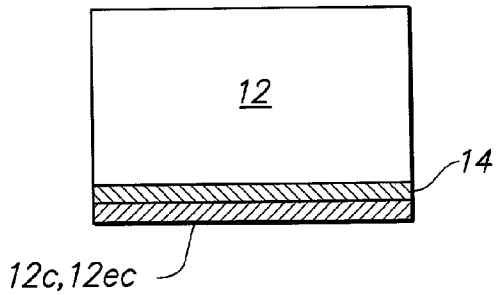

FIG. 4B

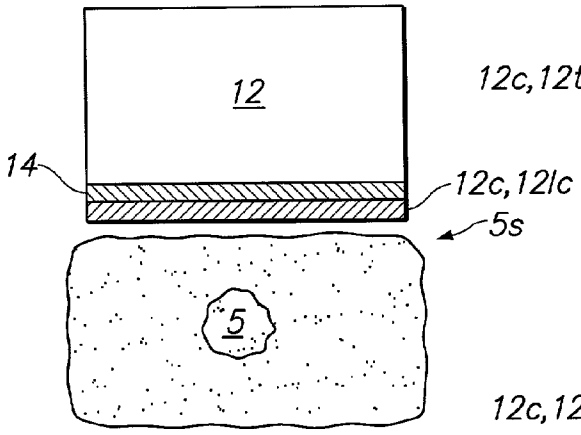

FIG. 4C

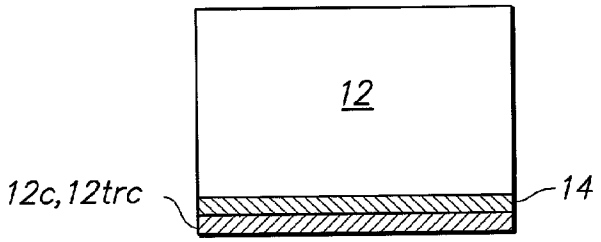

FIG. 4D

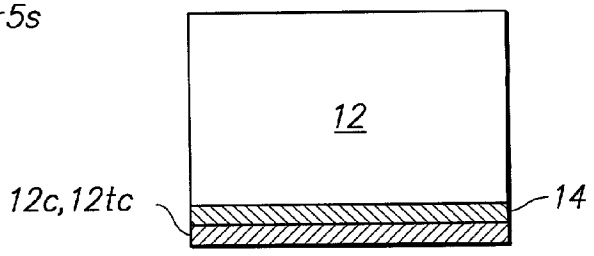

FIG. 4E

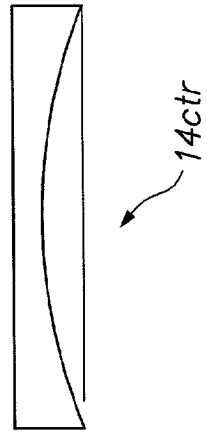

FIG. 5A

FIG. 5B

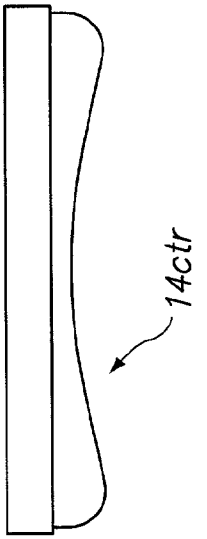

FIG. 5C

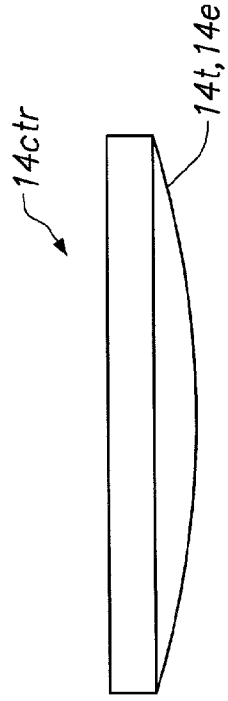

FIG. 5D

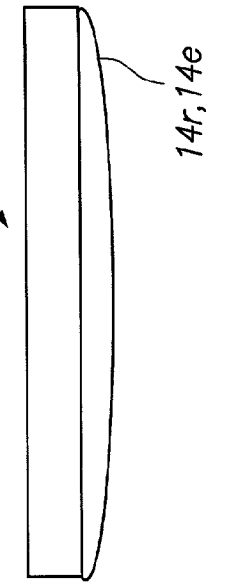

FIG. 5E

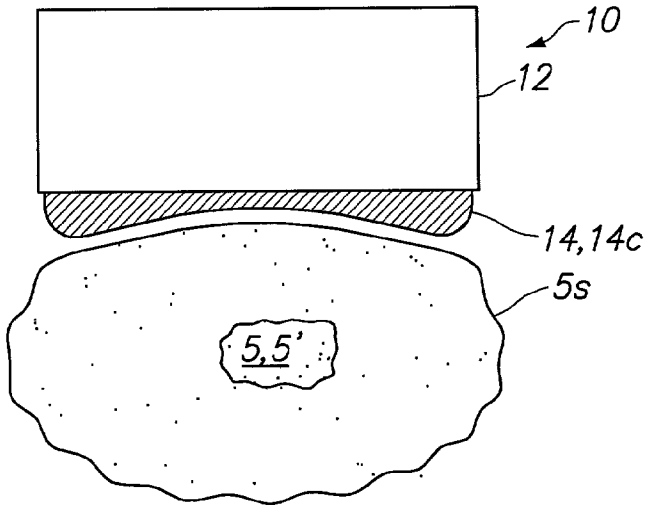

FIG. 6

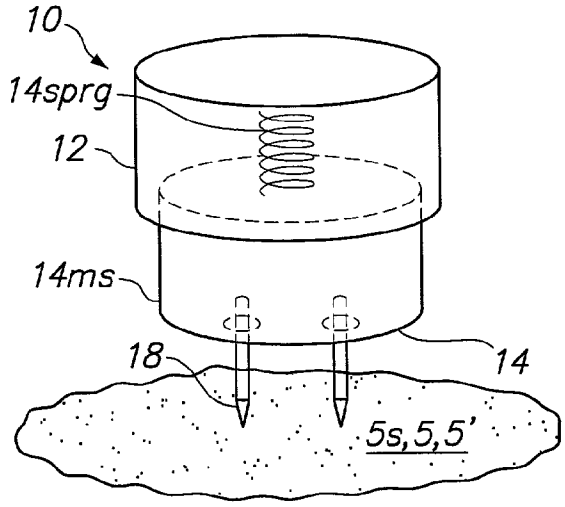

FIG. 7A

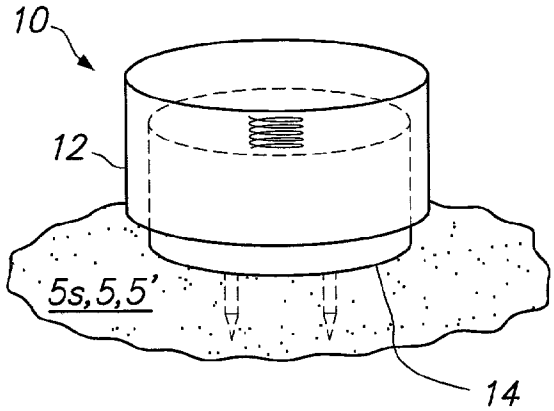

FIG. 7B

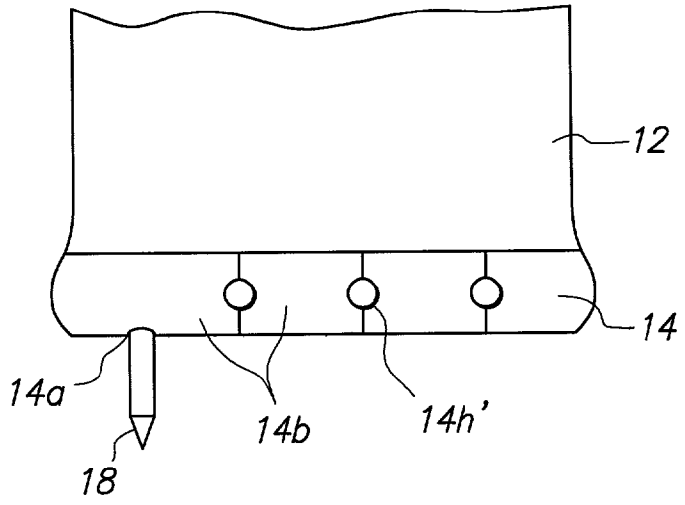

FIG. 8

FIG. 9A

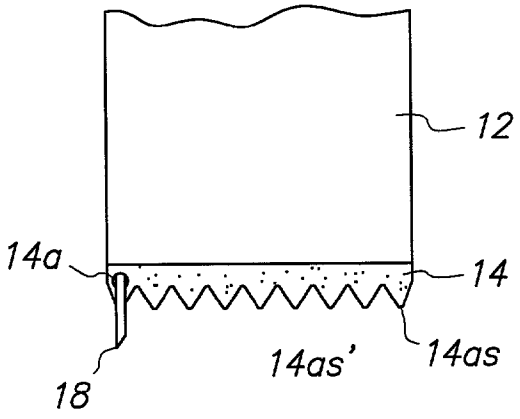

FIG. 9B

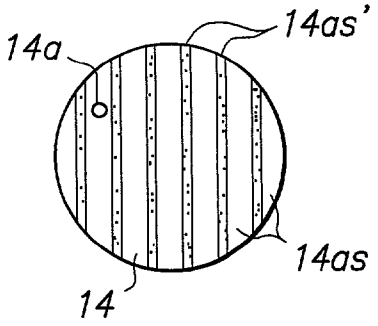

FIG. 10

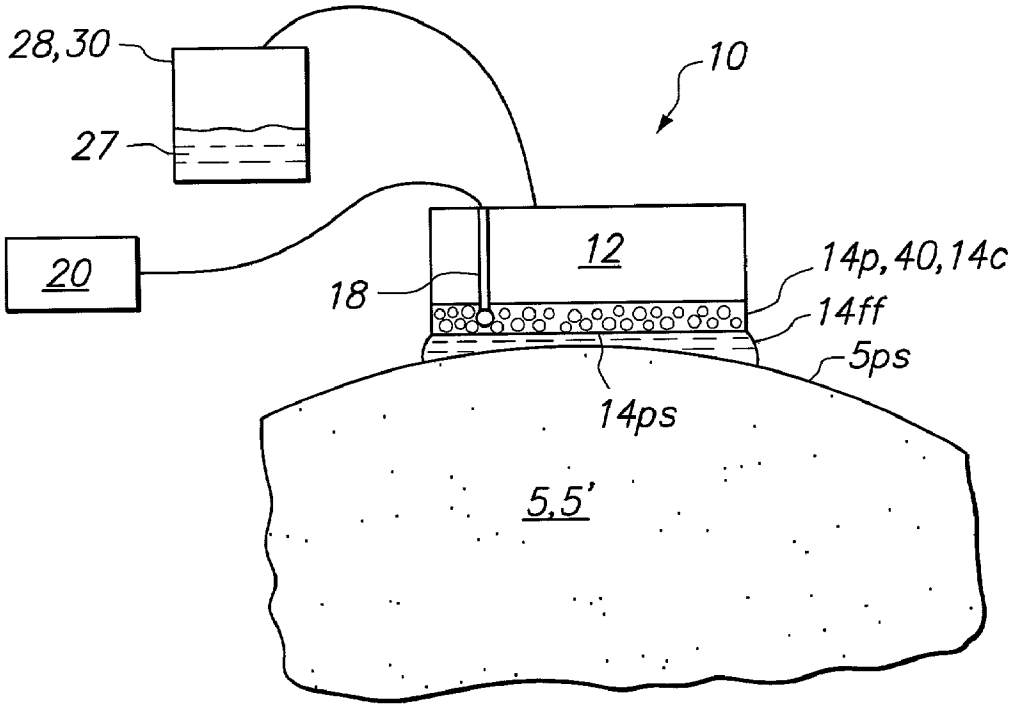
28,30
27
10
20
12
18
14p,40,14c
14ff
5ps
14ps
5,5'

FIG. 11

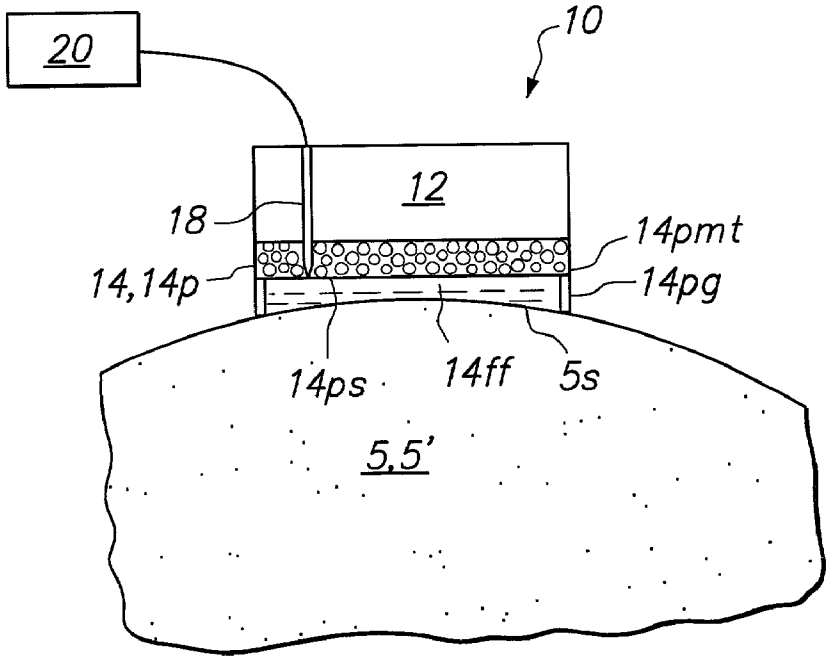
20
10
12
18
14pmt
14,14p
14pg
14ps
14ff
5s
5,5'

FIG. 12A

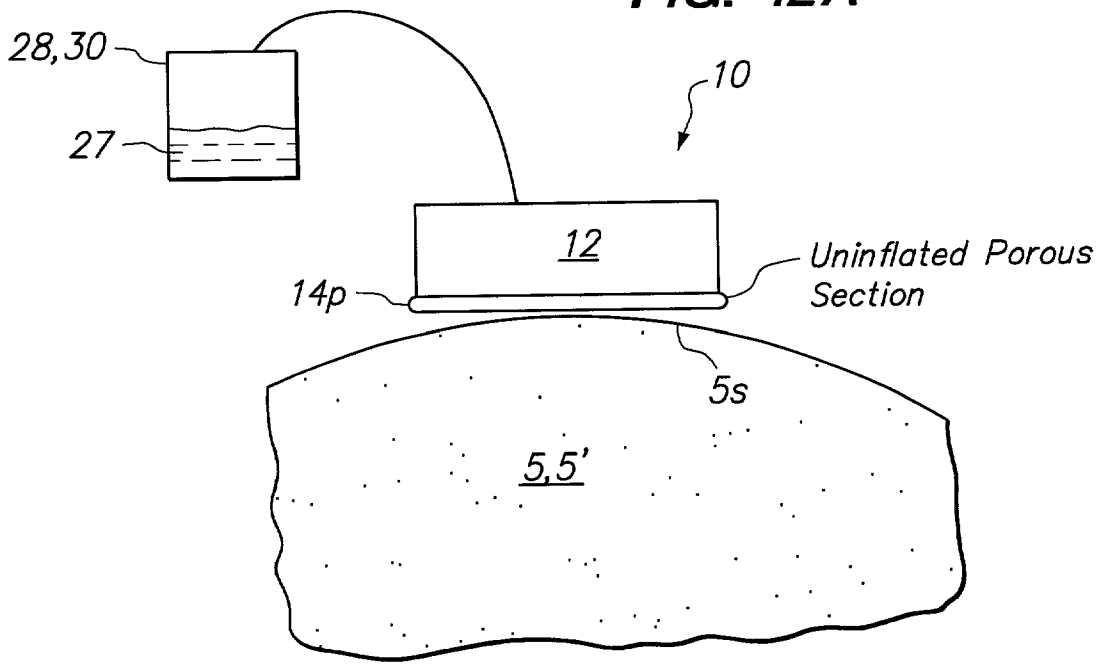

FIG. 12B

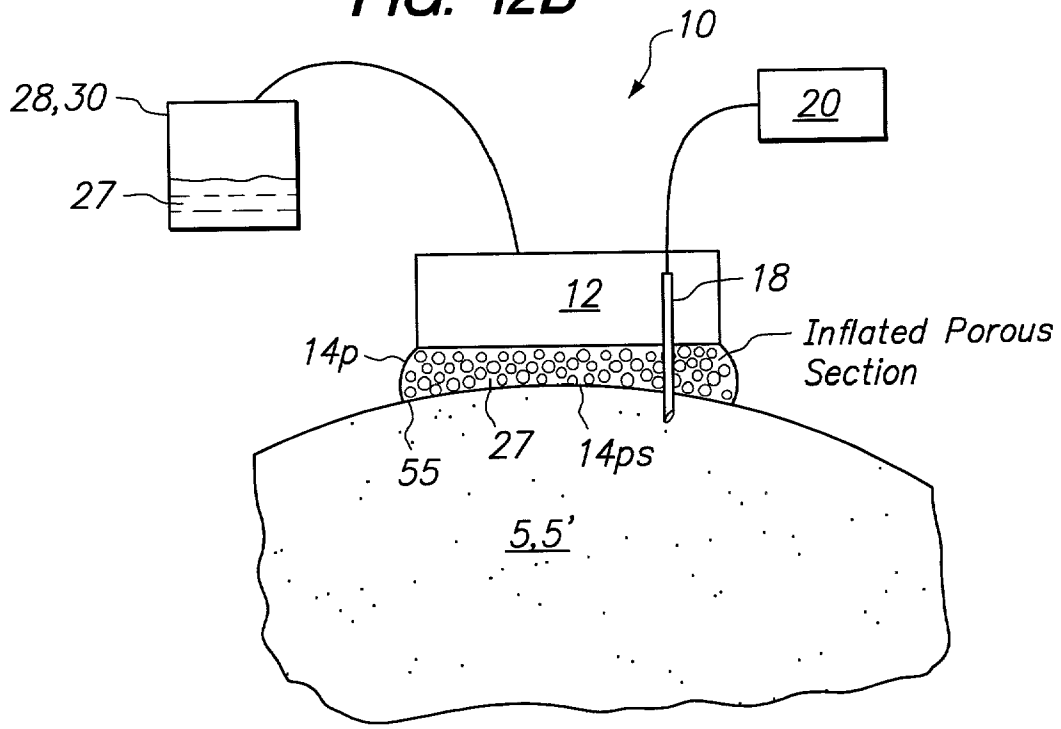

FIG. 13A

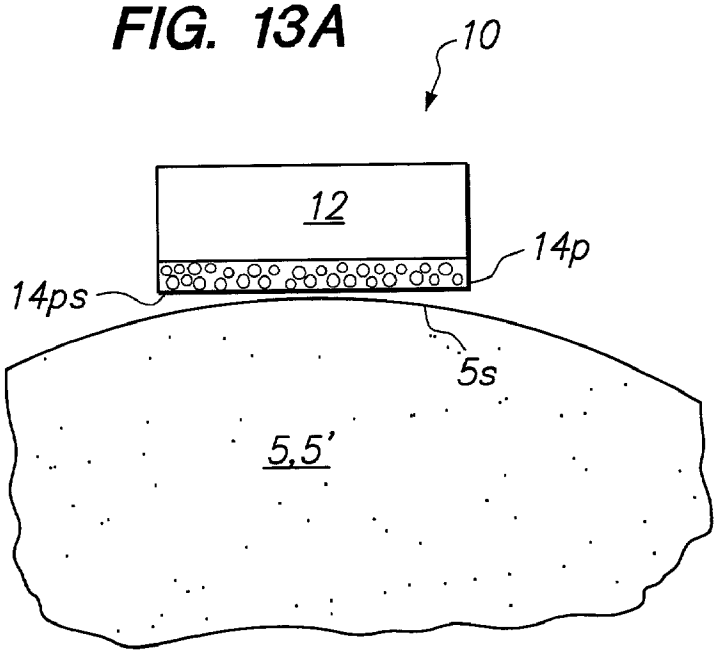

FIG. 13B

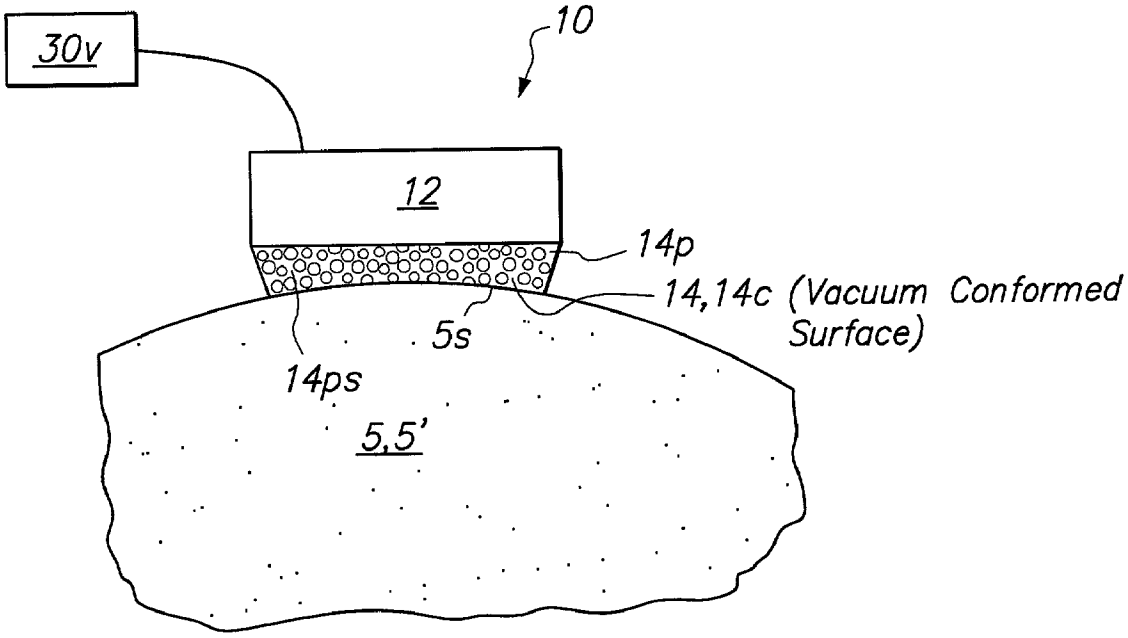

FIG. 14

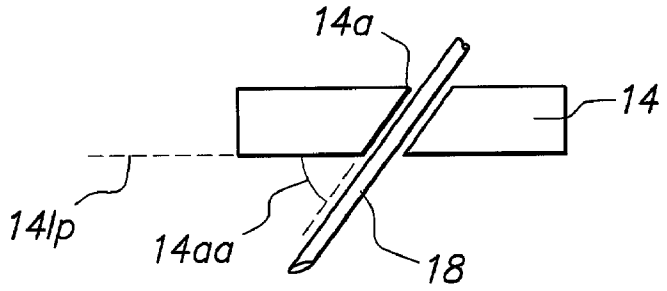

FIG. 15A

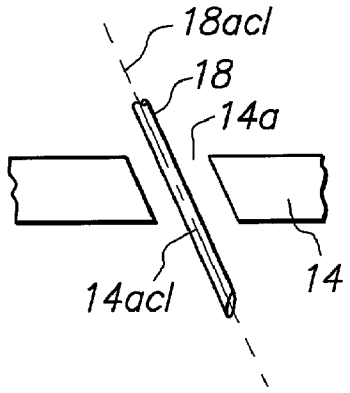

FIG. 15B

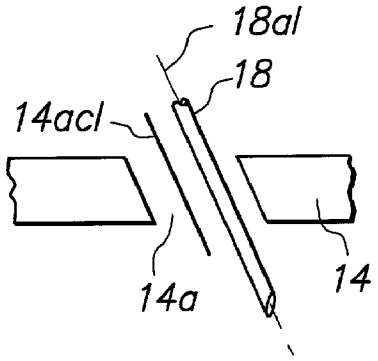

FIG. 15C

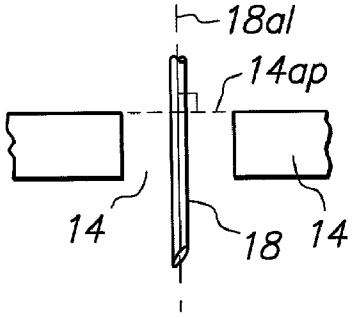

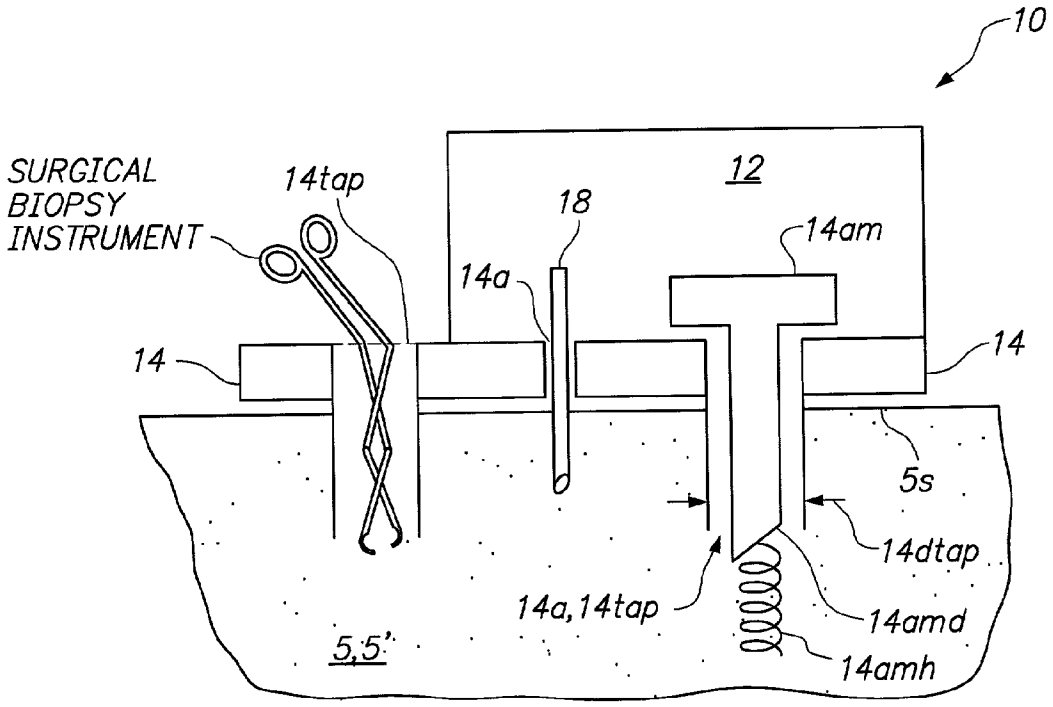
10
SURGICAL
BIOPSY
INSTRUMENT
14tap
12
18
14am
14a
14
14
5s
14dtap
14a,14tap
14amd
5,5'
14amh

FIG. 15d

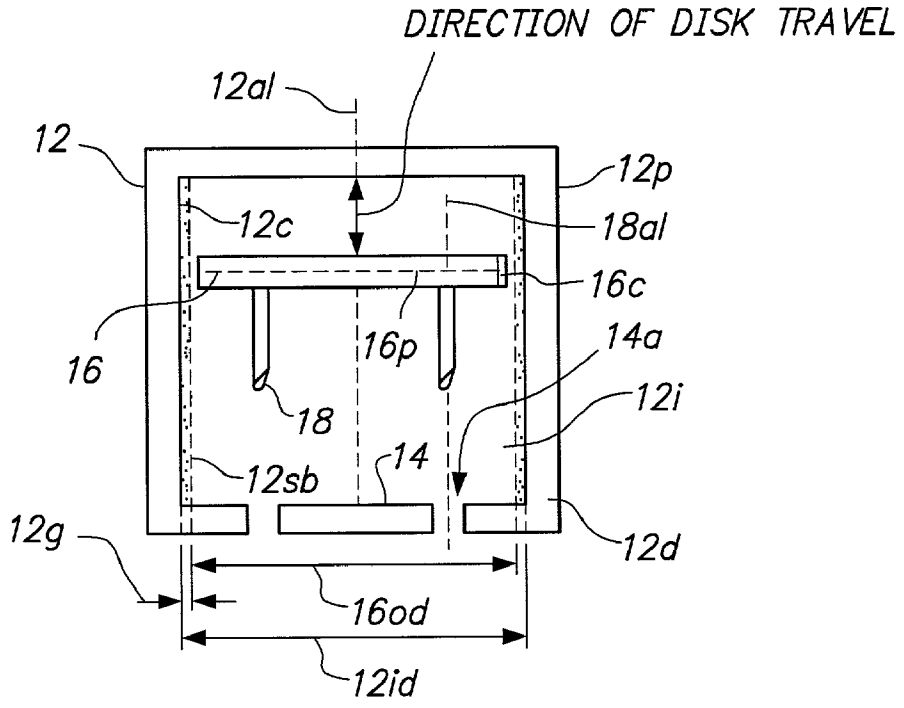
DIRECTION OF DISK TRAVEL
12al
12
12p
12c
18al
16c
16
16p
14a
18
12i
14
12sb
12g
12d
16od
12id

FIG. 16

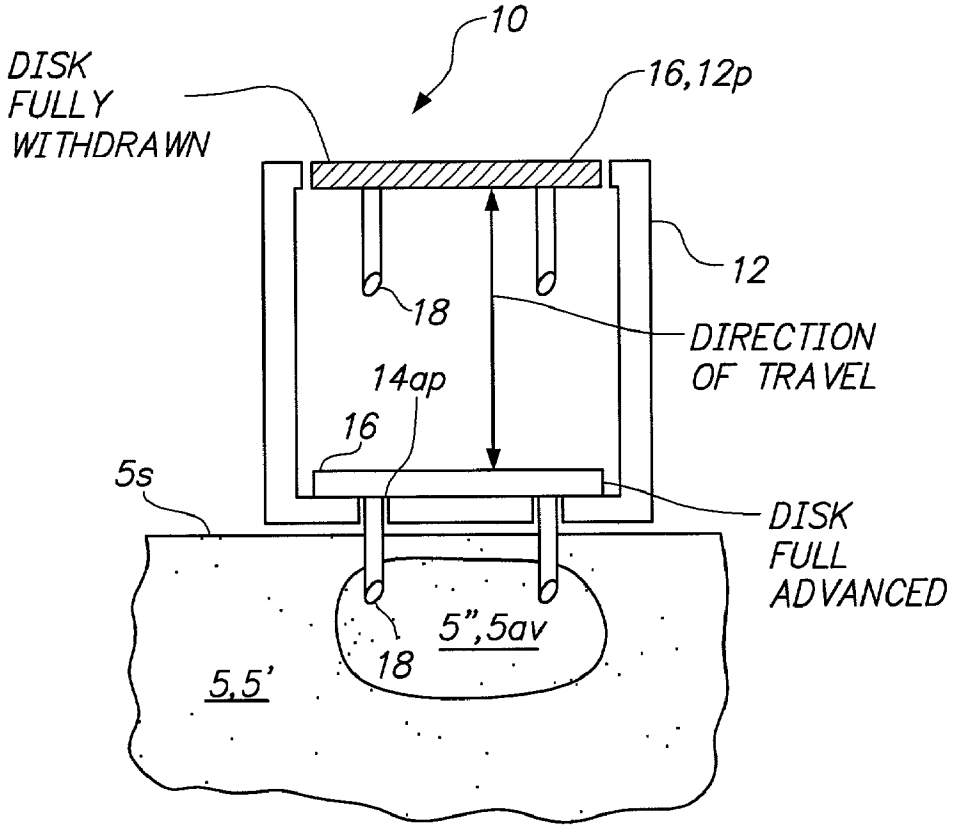
10
DISK
FULLY
WITHDRAWN
16,12p
12
18
DIRECTION
OF TRAVEL
14ap
16
5s
DISK
FULL
ADVANCED
5",5av
18
5,5'

FIG. 17

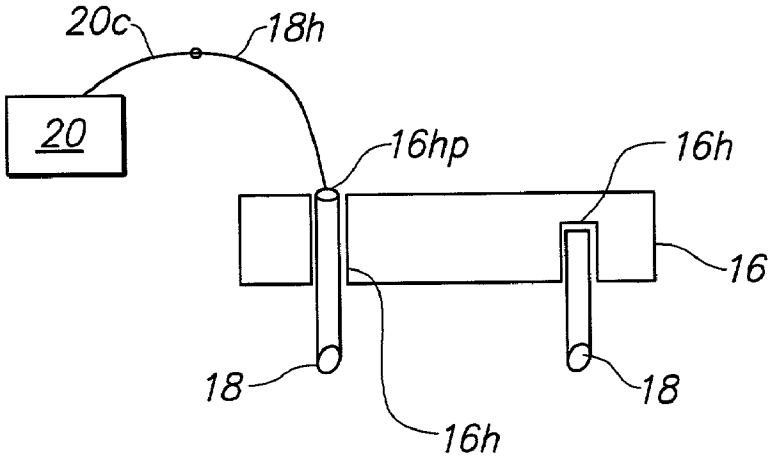

FIG. 18

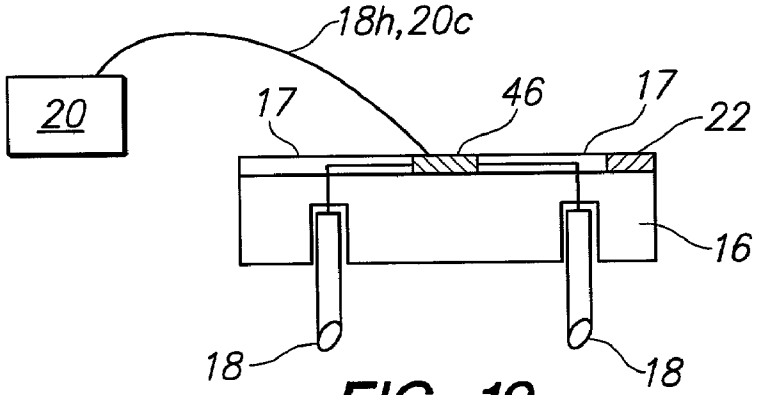

FIG. 19

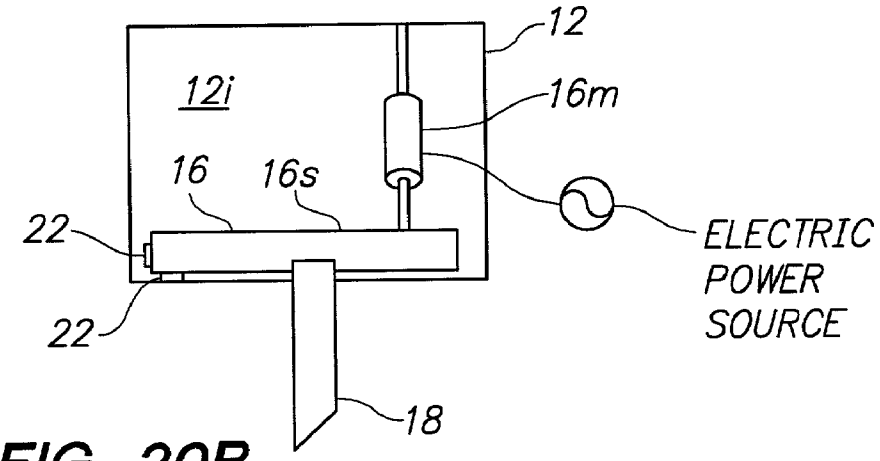

FIG. 20B

FIG. 20A

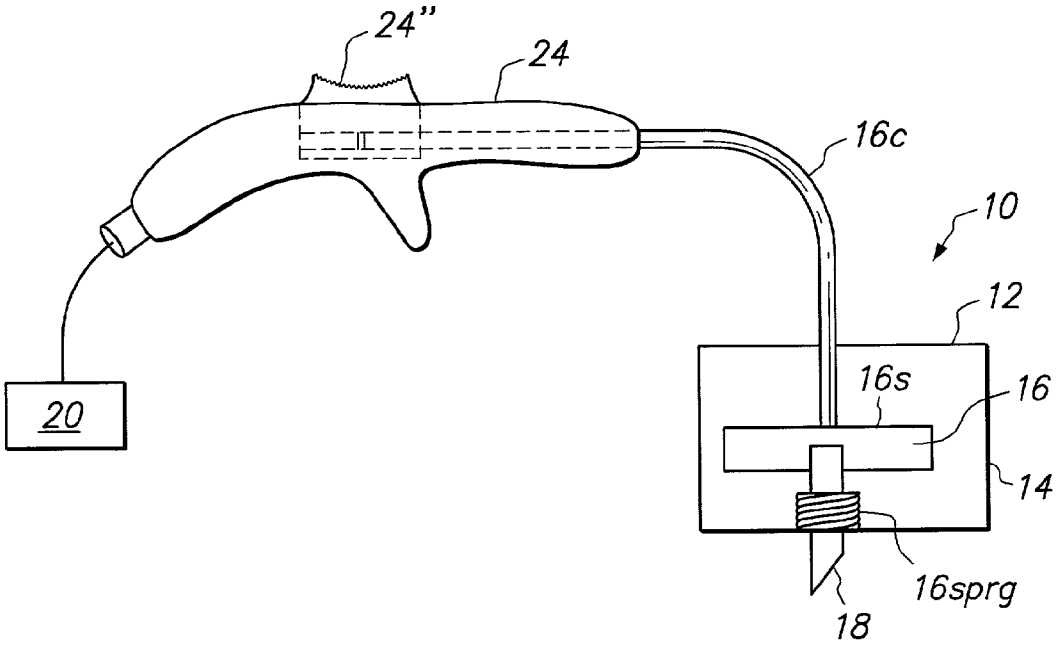

FIG. 20C

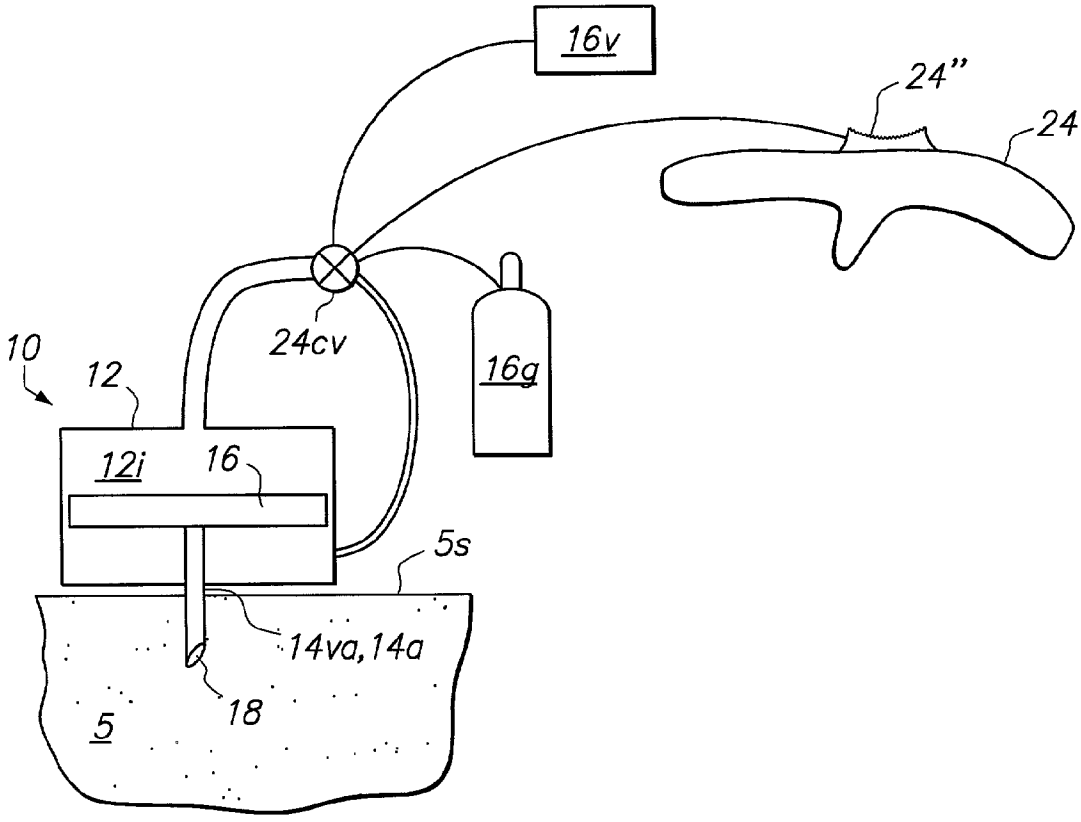

FIG. 20D

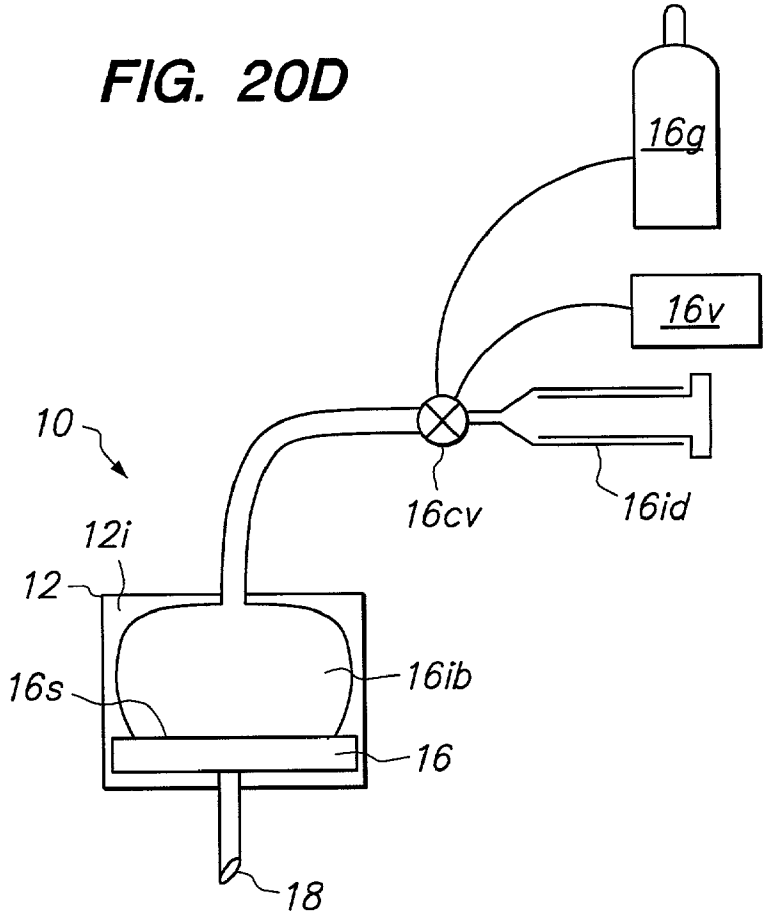

FIG. 20E

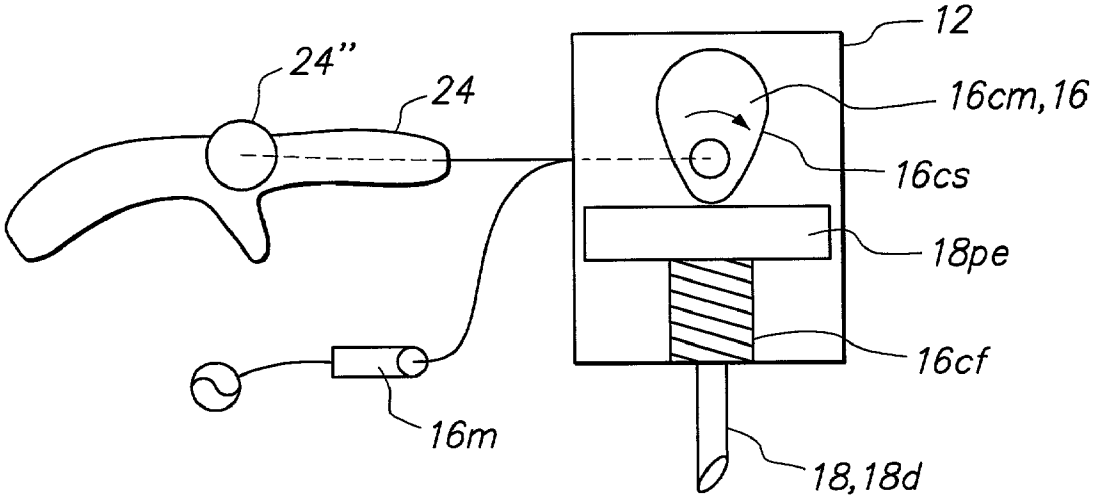

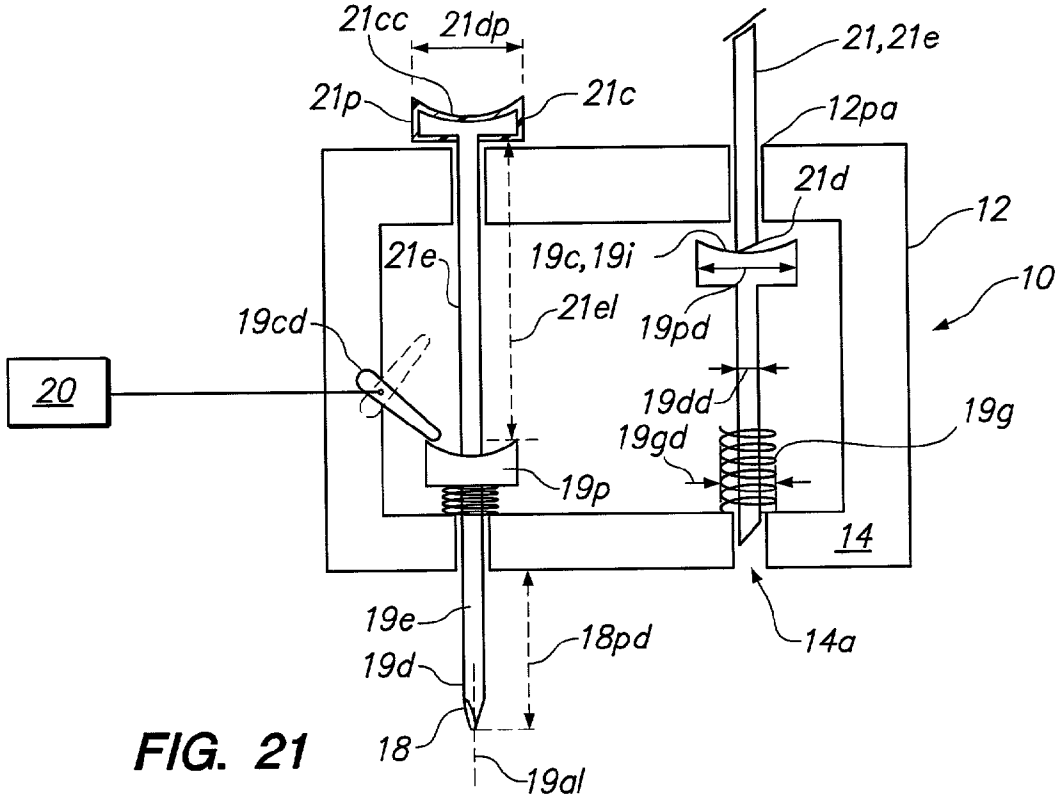
21cc
21dp
21,21e
21p
21c
12pa
21d
12
21e
19c,19i
10
21el
19pd
19cd
20
19dd
19g
19gd
19p
14
19e
18pd
14a
19d
18
19al

FIG. 21

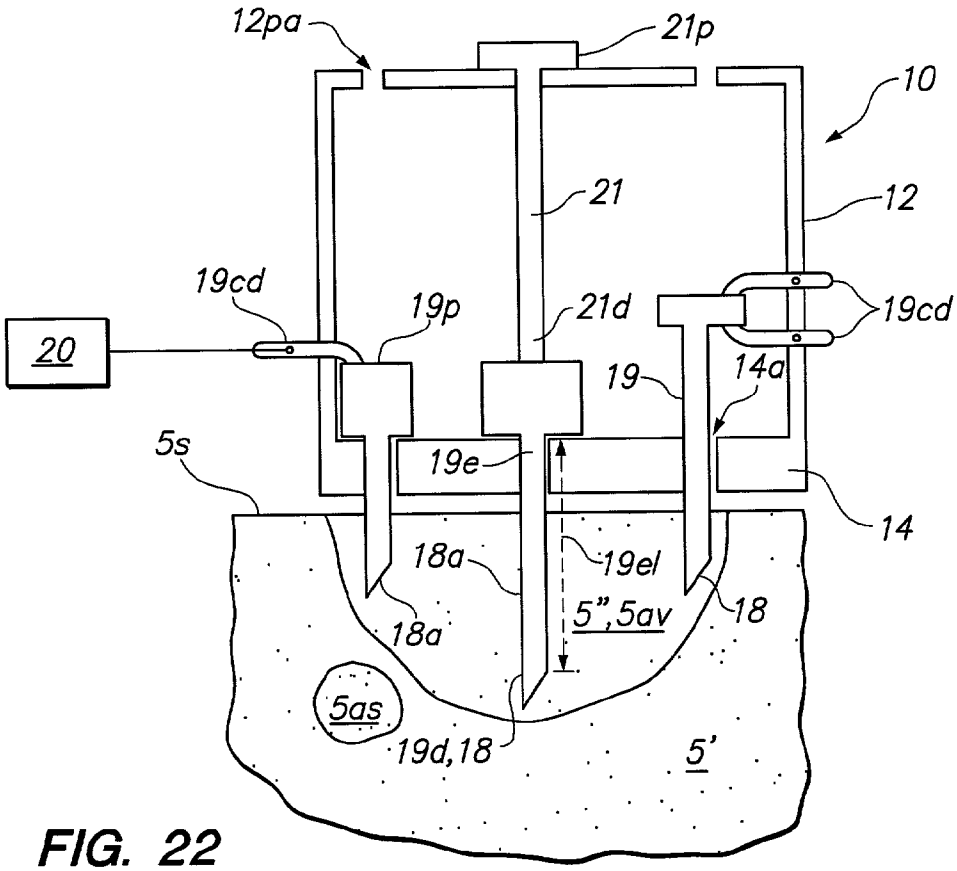
12pa
21p
10
21
12
19cd
19p
21d
19cd
20
19
14a
5s
19e
14
18a
19el
5",5av
18
18a
5as
19d,18
5'

FIG. 22

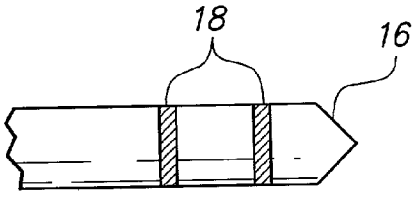

FIG. 23A

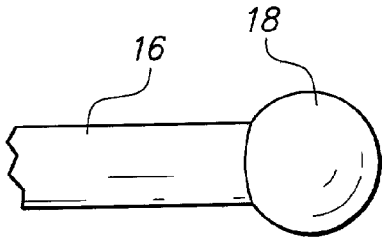

FIG. 23B

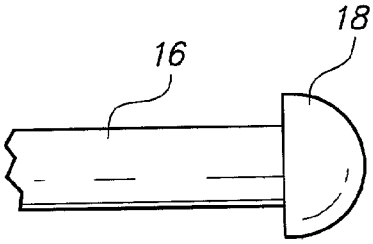

FIG. 23C

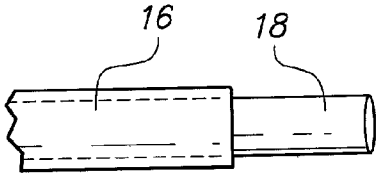

FIG. 23D

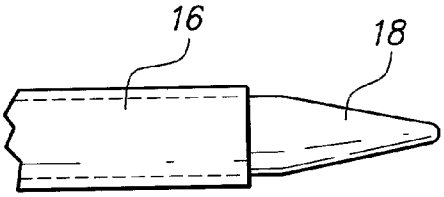

FIG. 23E

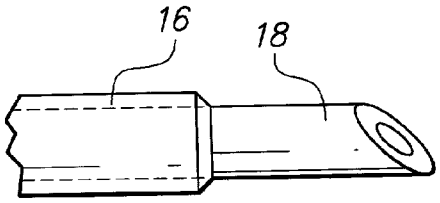

FIG. 23F

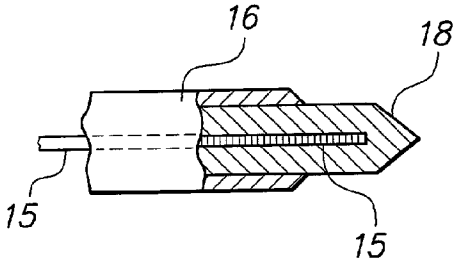

FIG. 23G

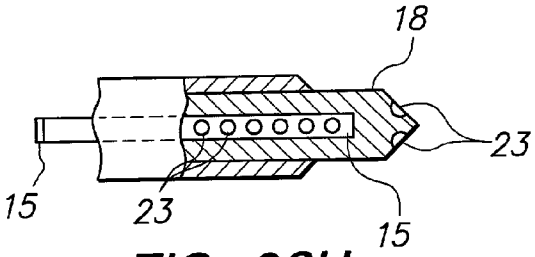

FIG. 23H

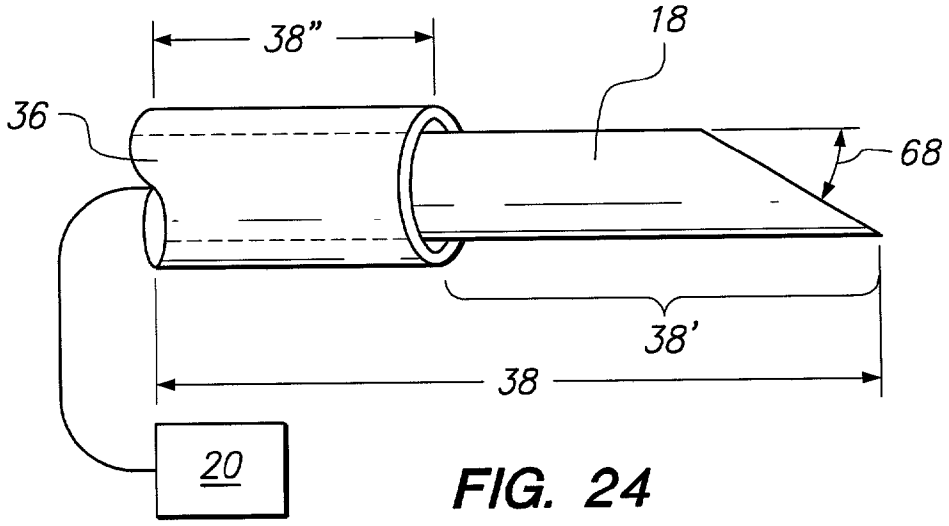

FIG. 24

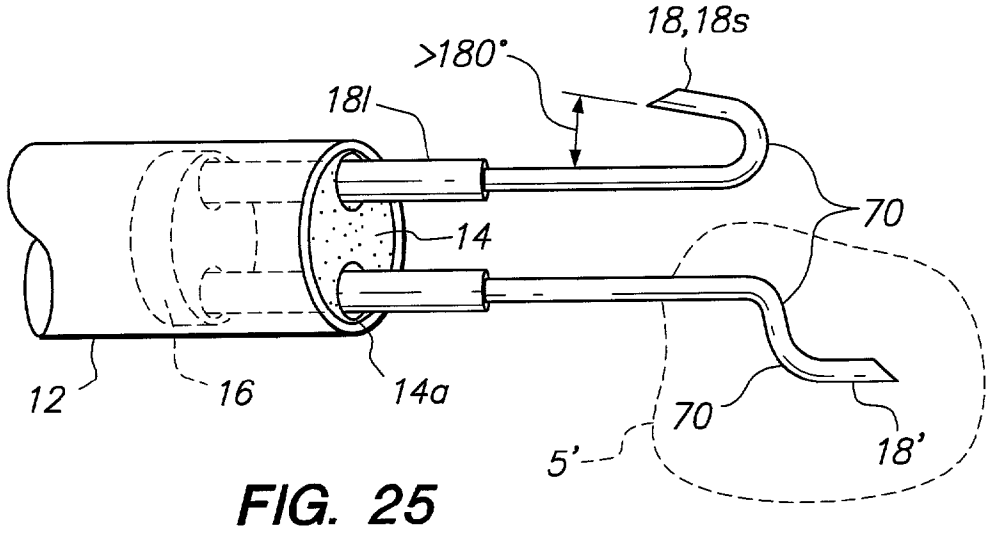

FIG. 25

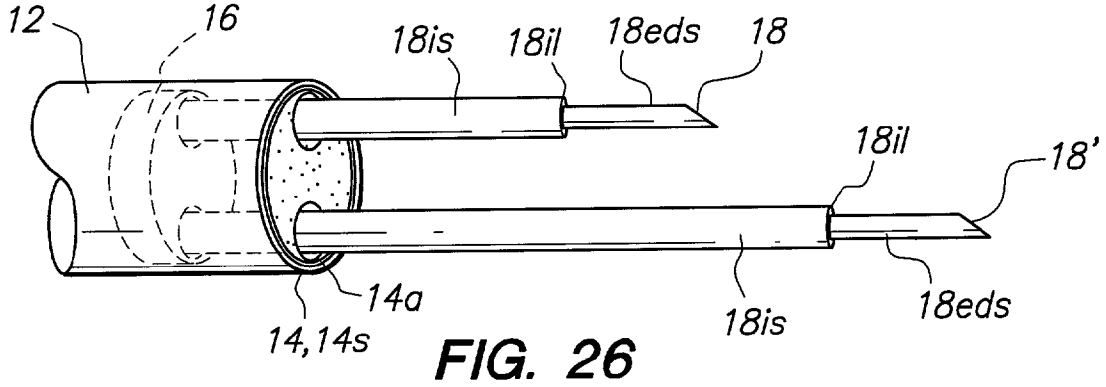

FIG. 26

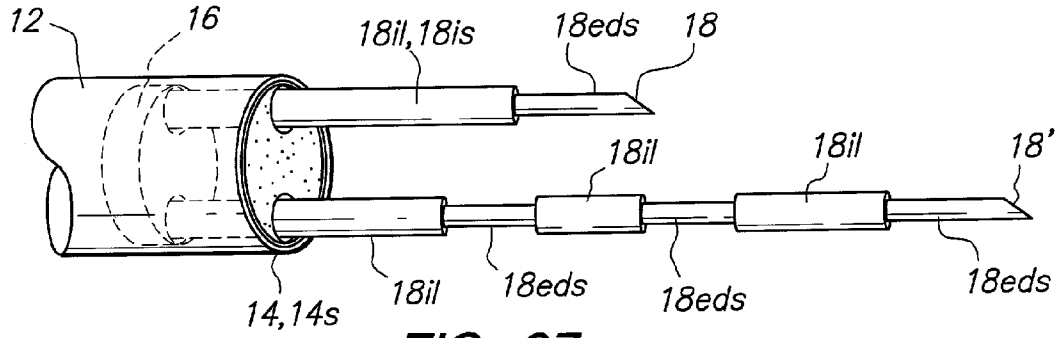

FIG. 27

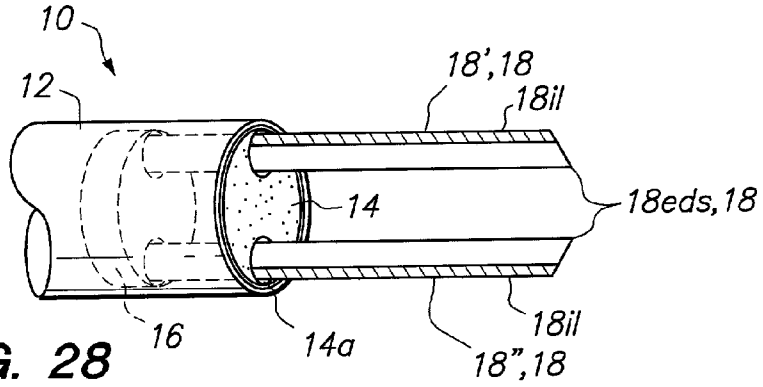

FIG. 28

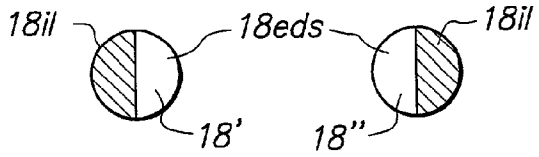

FIG. 29

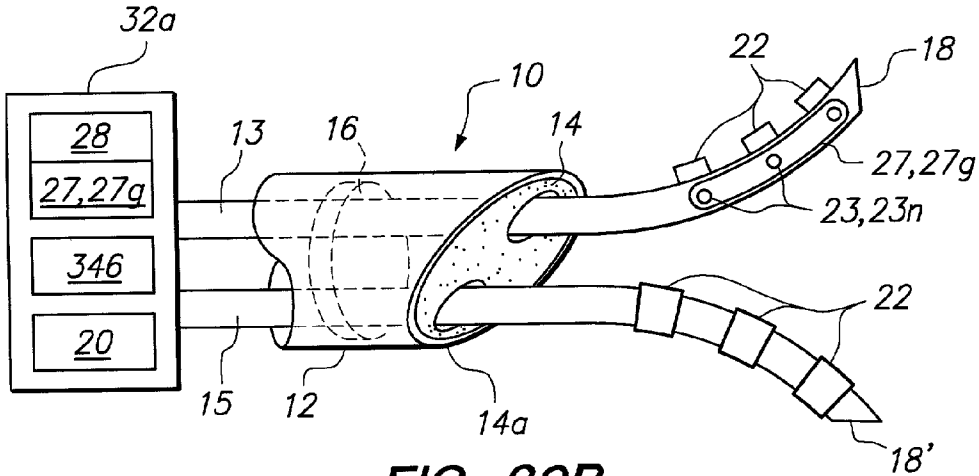

FIG. 30B

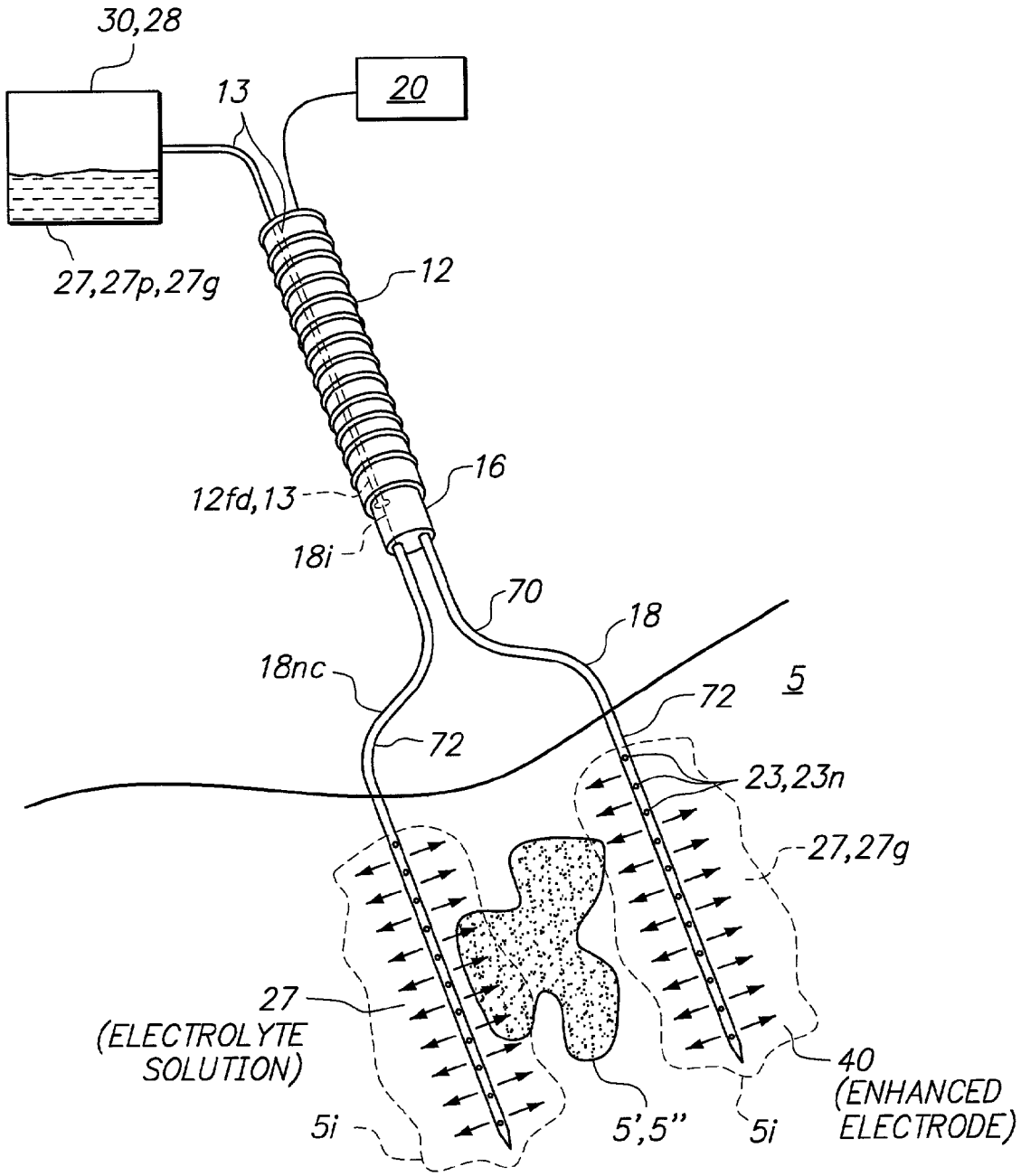
30,28
13
20
27,27p,27g
12
16
12fd,13
18i
70
18
18nc
5
72
72
23,23n
27,27g
27
(ELECTROLYTE
SOLUTION)
40
(ENHANCED
ELECTRODE)
5i
5',5"
5i

FIG. 30A

FIG. 31

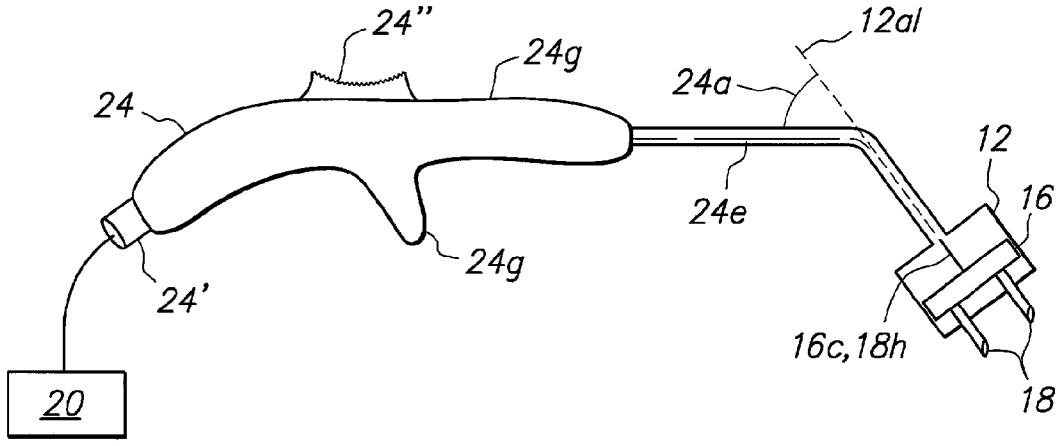

FIG. 32A

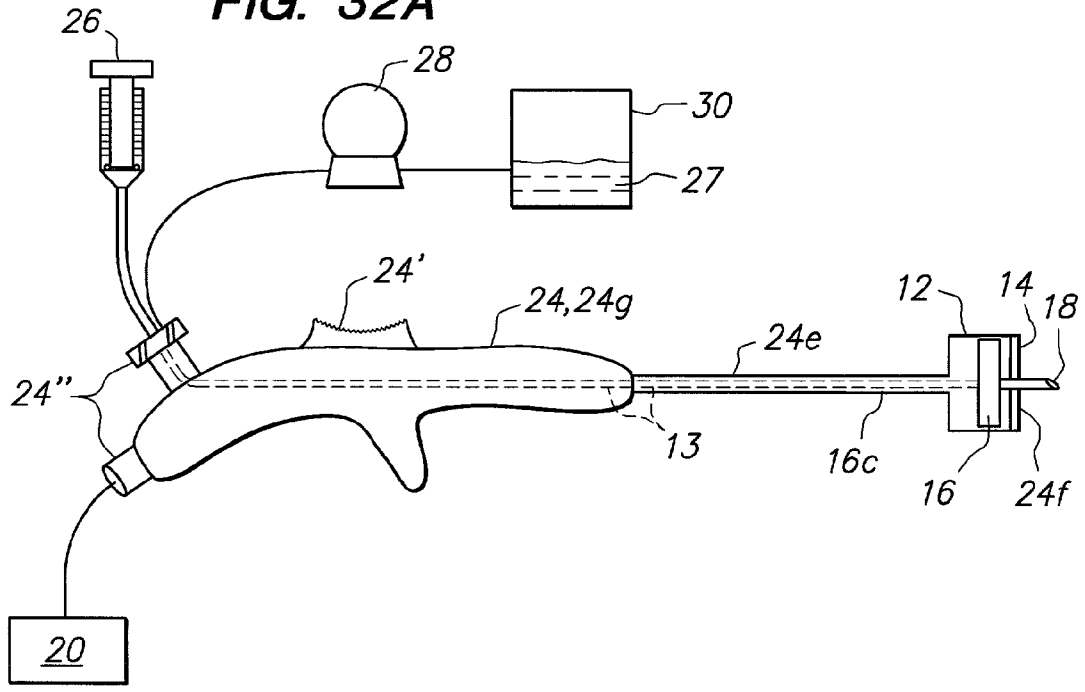

FIG. 32B

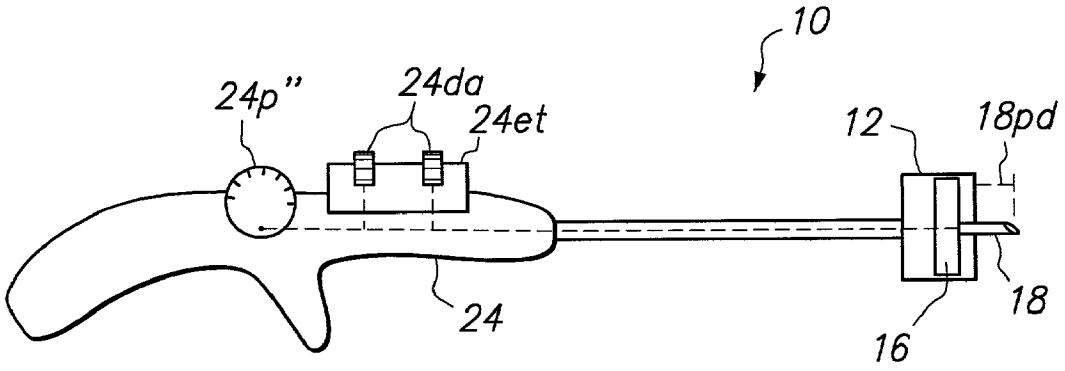

FIG. 33

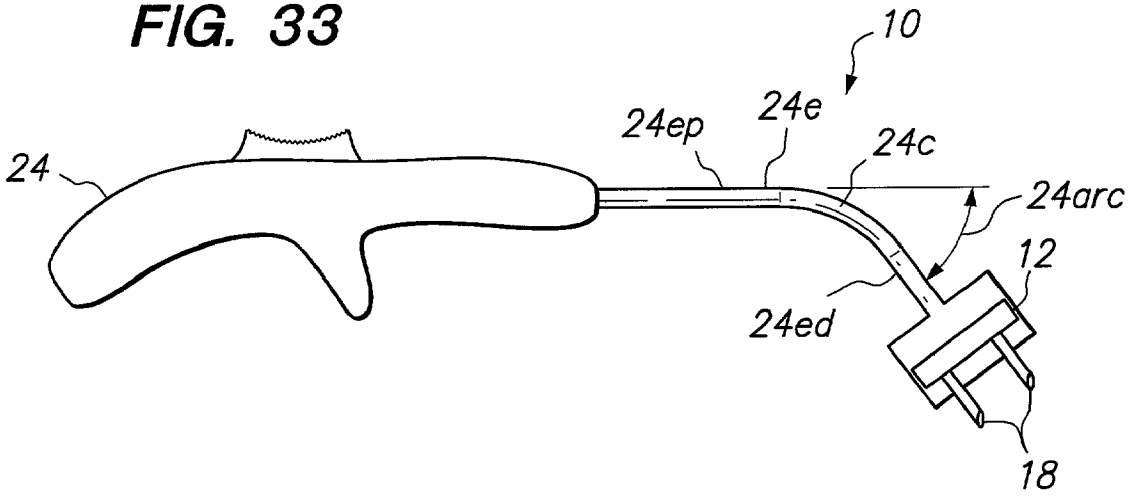

FIG. 34

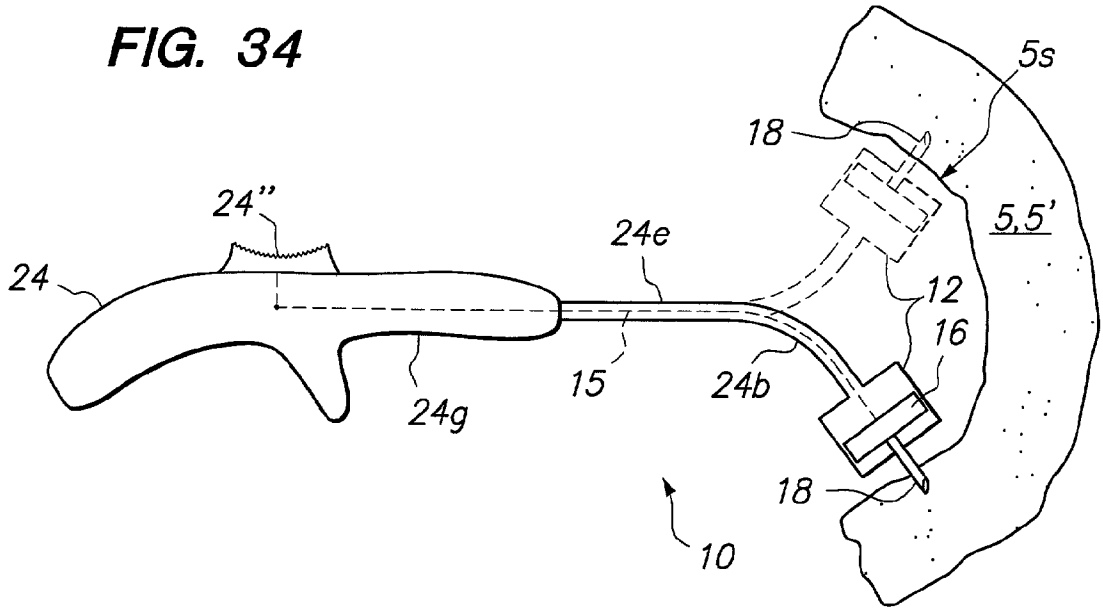
5s
18
24"
24e
5,5'
24
12
16
15
24b
24g
18
10

FIG. 35

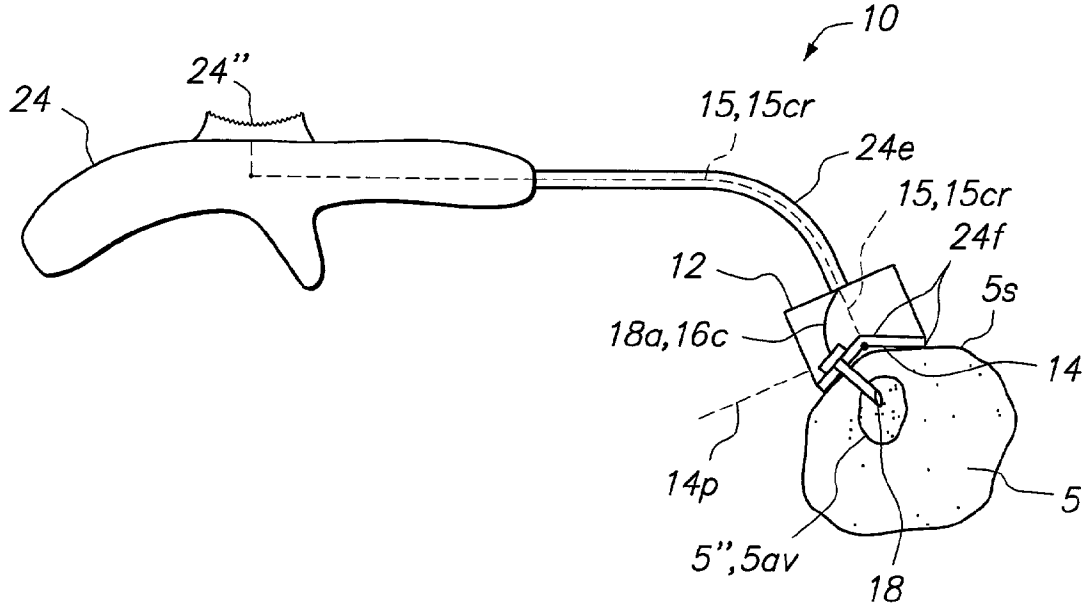
10
24"
24
15,15cr
24e
15,15cr
24f
12
5s
18a,16c
14
14p
5
5",5av
18

FIG. 36A

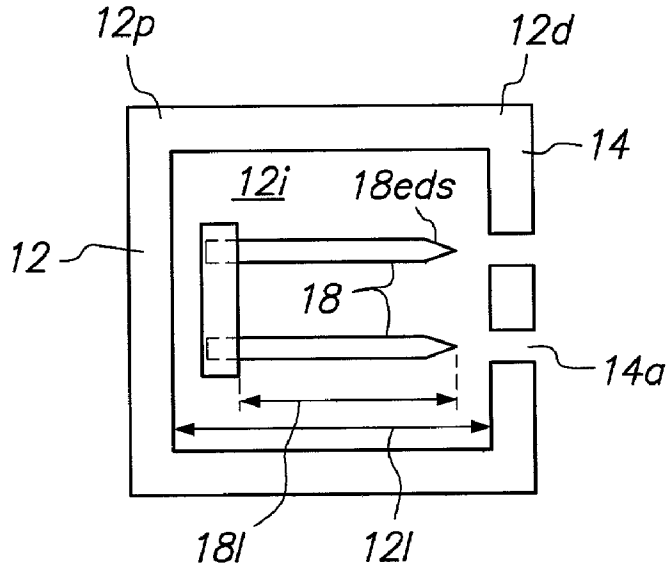

FIG. 36B

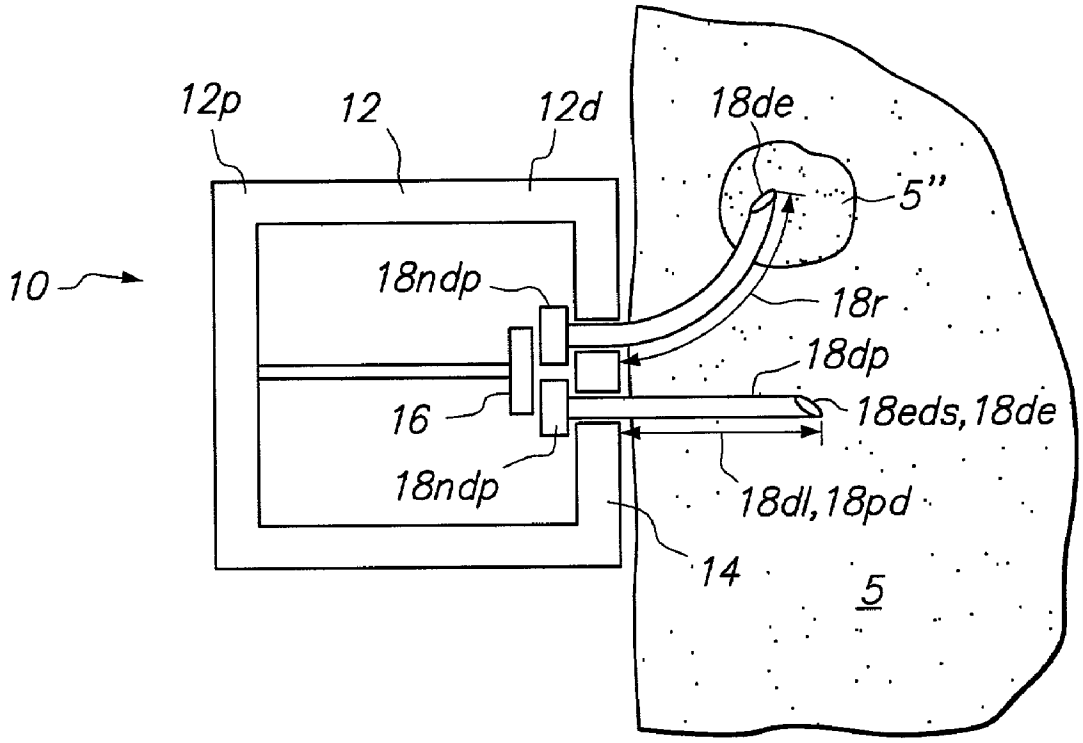

FIG. 37

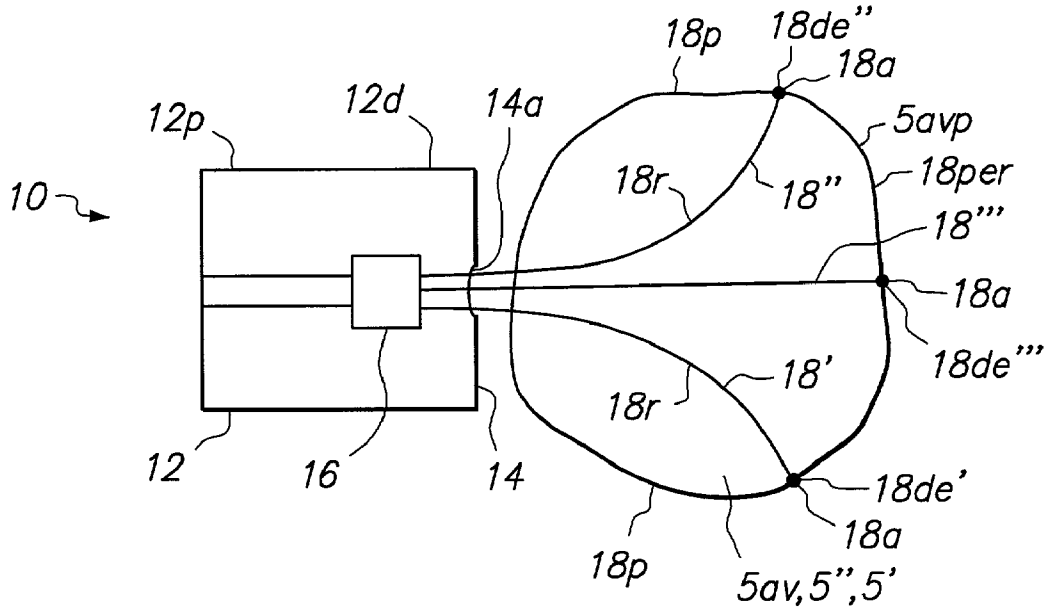

FIG. 38A

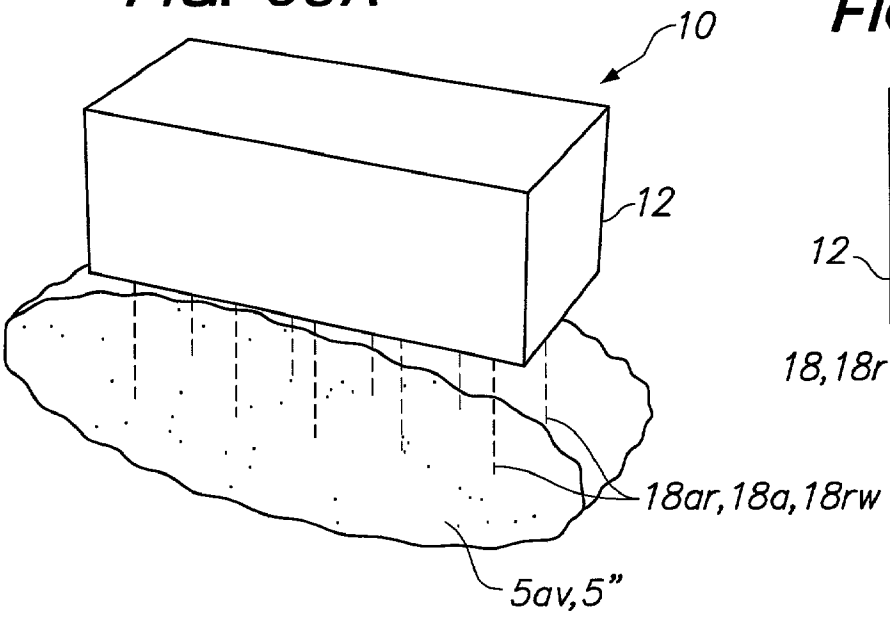

FIG. 38B

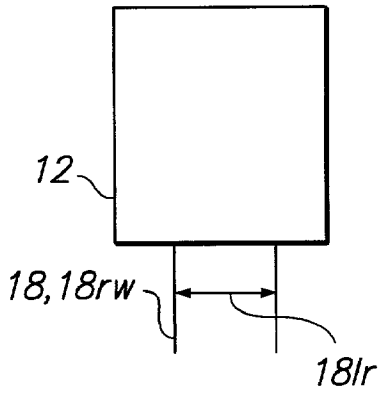

FIG. 39

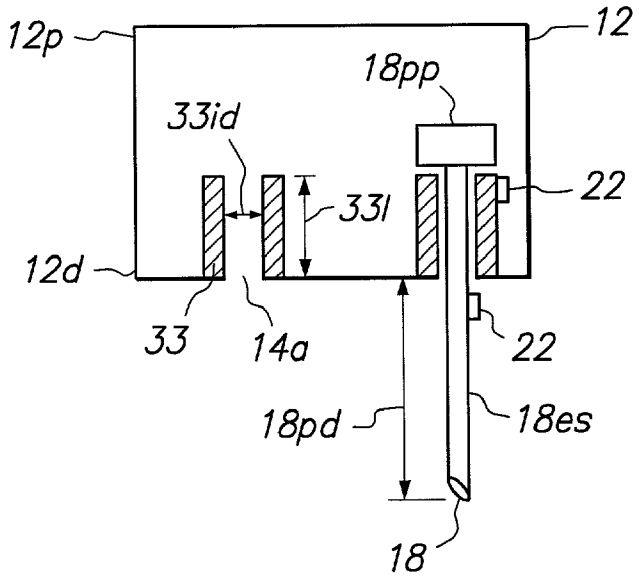
12p
12
18pp
33id
22
33l
12d
33
14a
22
18pd
18es
18

FIG. 40

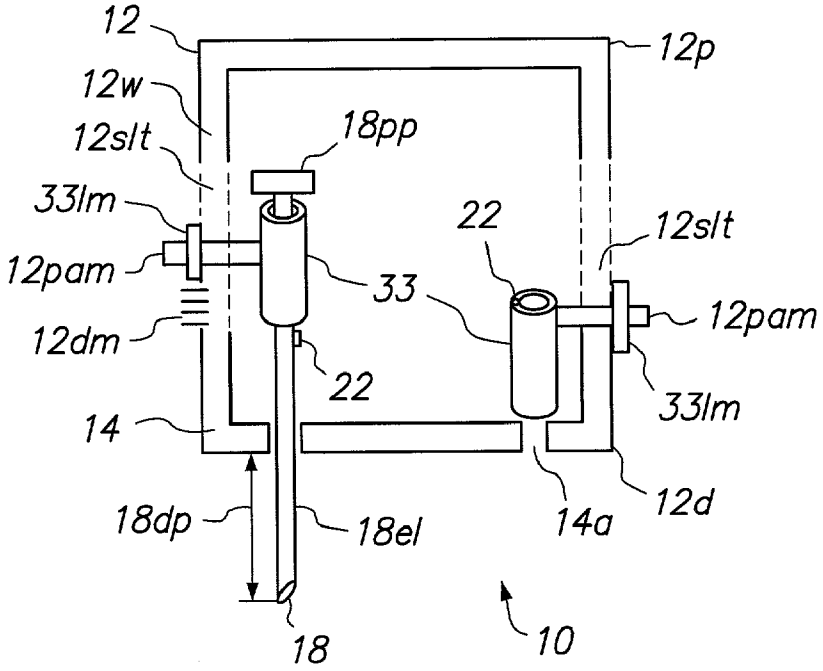
12
12p
12w
18pp
12slt
33lm
22
12slt
12pam
33
12pam
12dm
22
33lm
14
12d
18dp
18el
14a
18
10

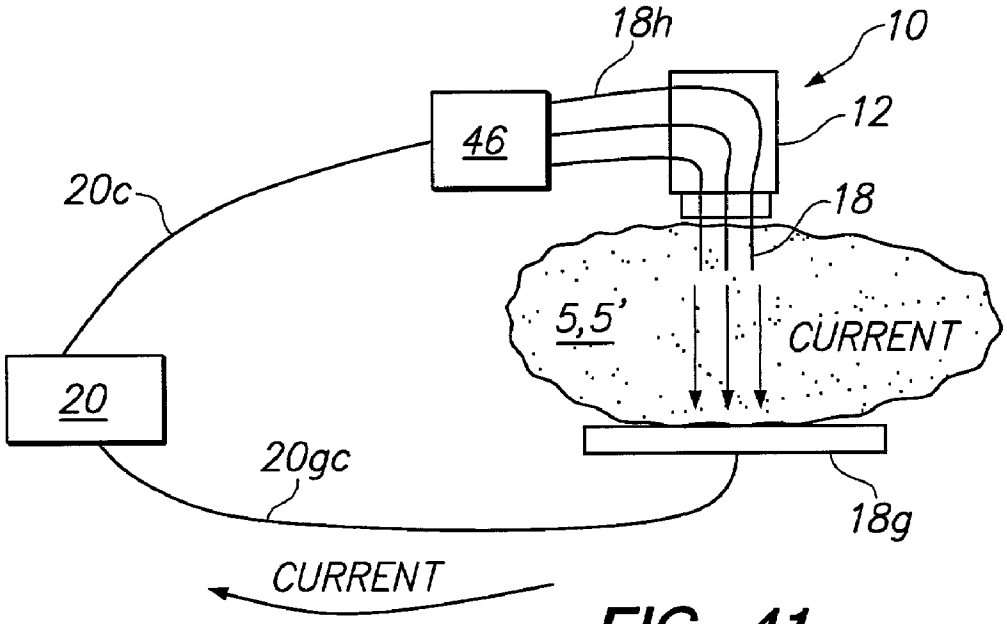

FIG. 41

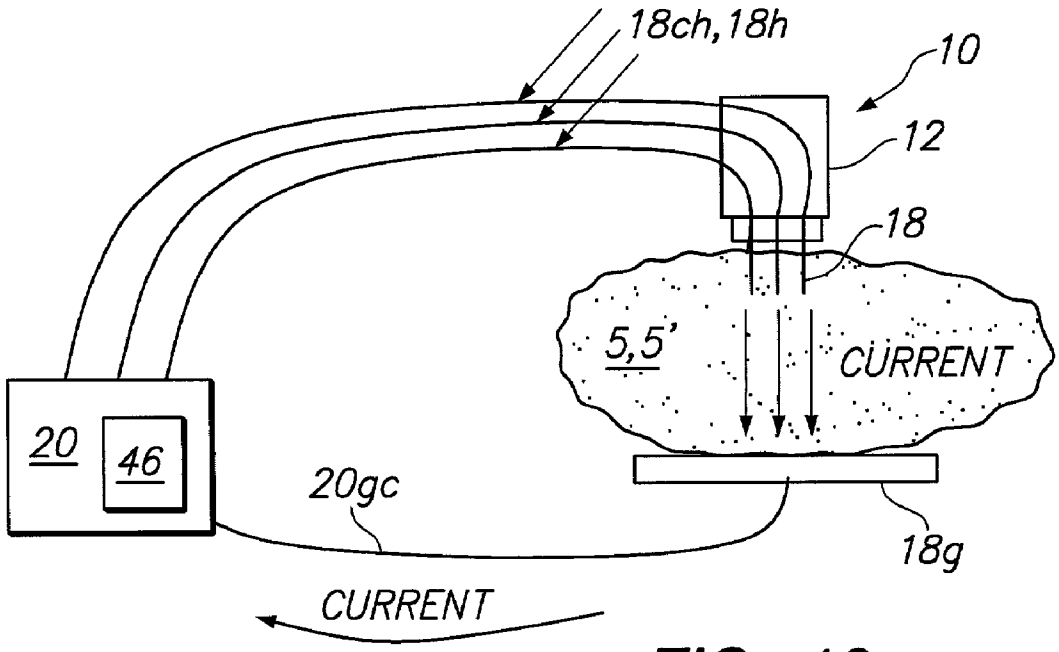
18ch,18h
10
12
18
5,5'
CURRENT
20
46
20gc
18g
CURRENT

FIG. 42

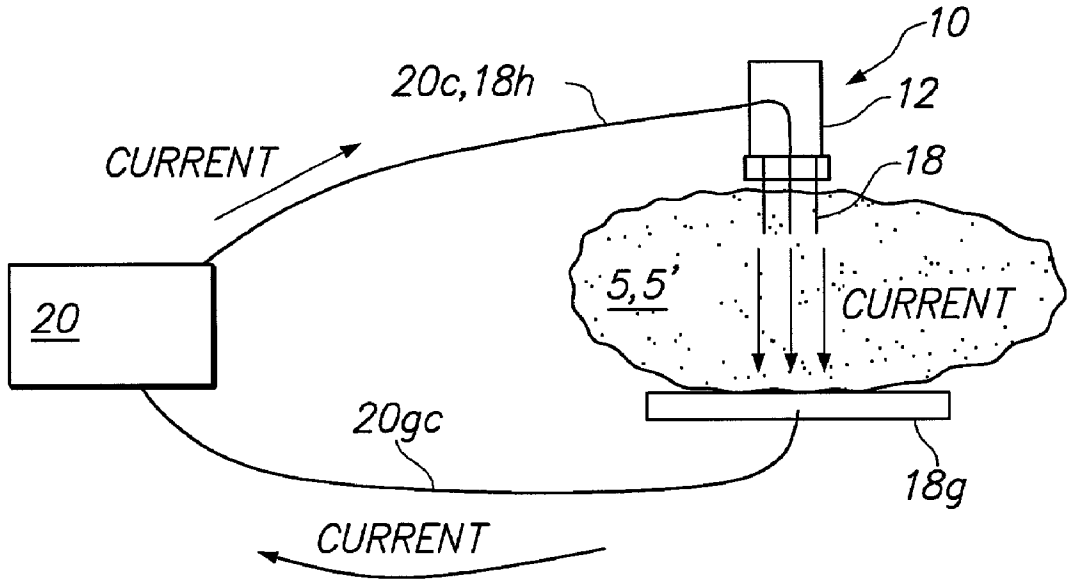
10
20c,18h
12
CURRENT
18
5,5'
CURRENT
20
20gc
18g
CURRENT

FIG. 43

FIG. 44A

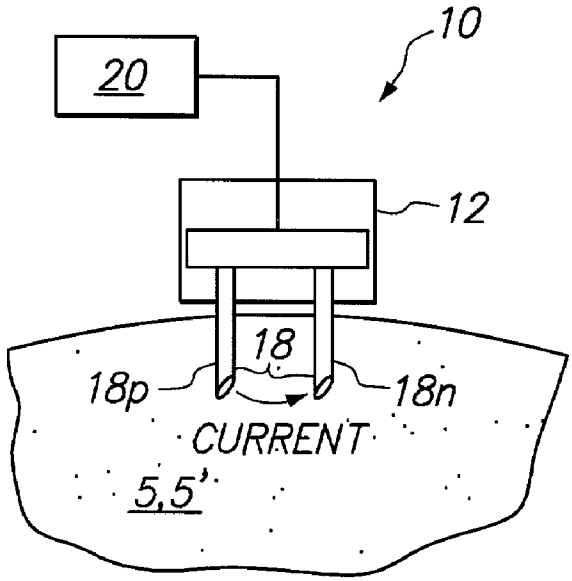

FIG. 44B

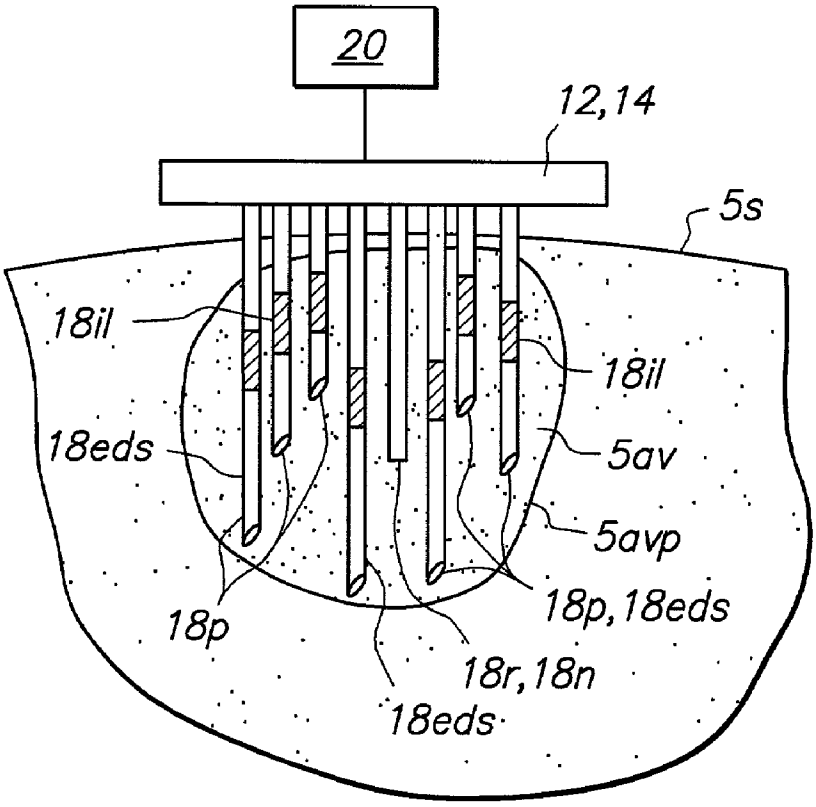

FIG. 44C

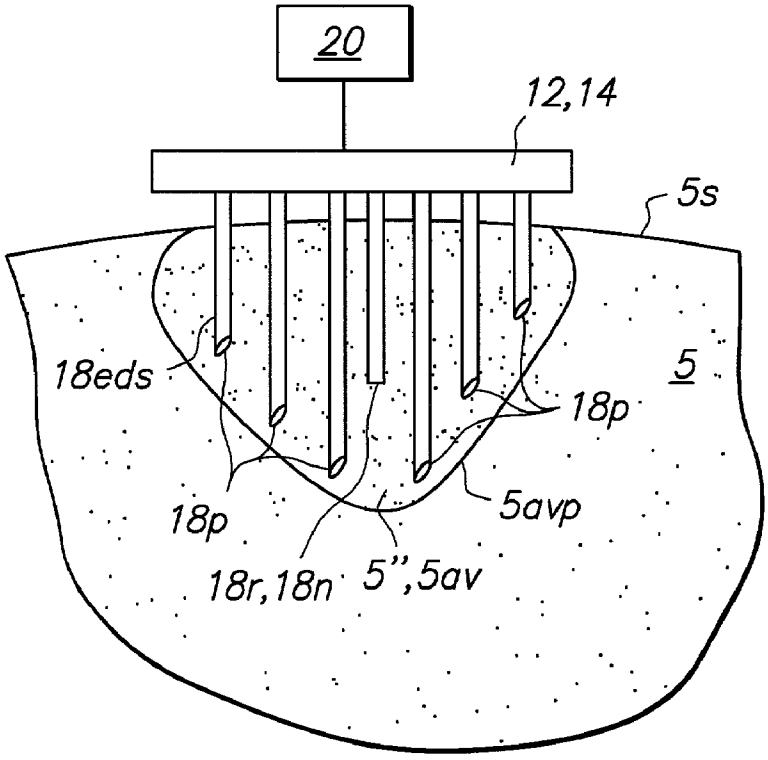

FIG. 45

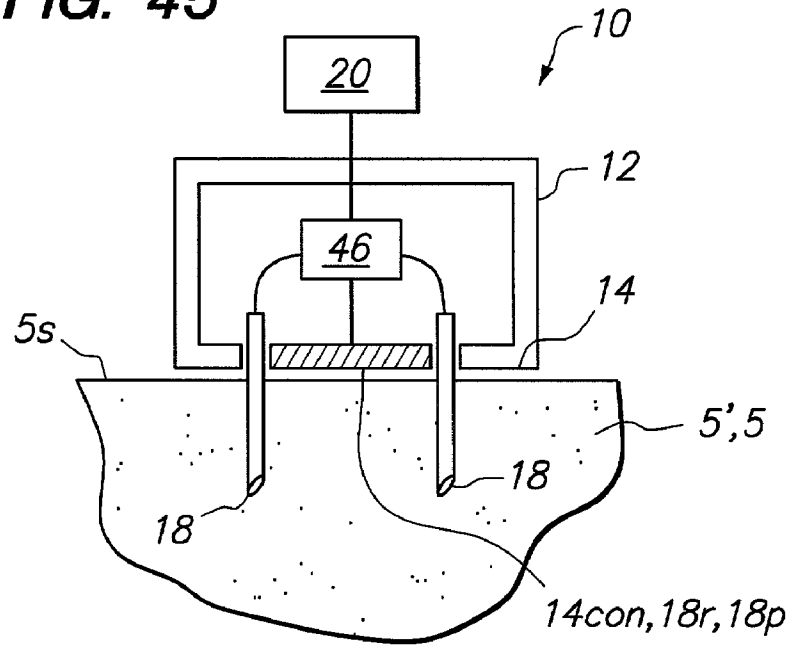

FIG. 46

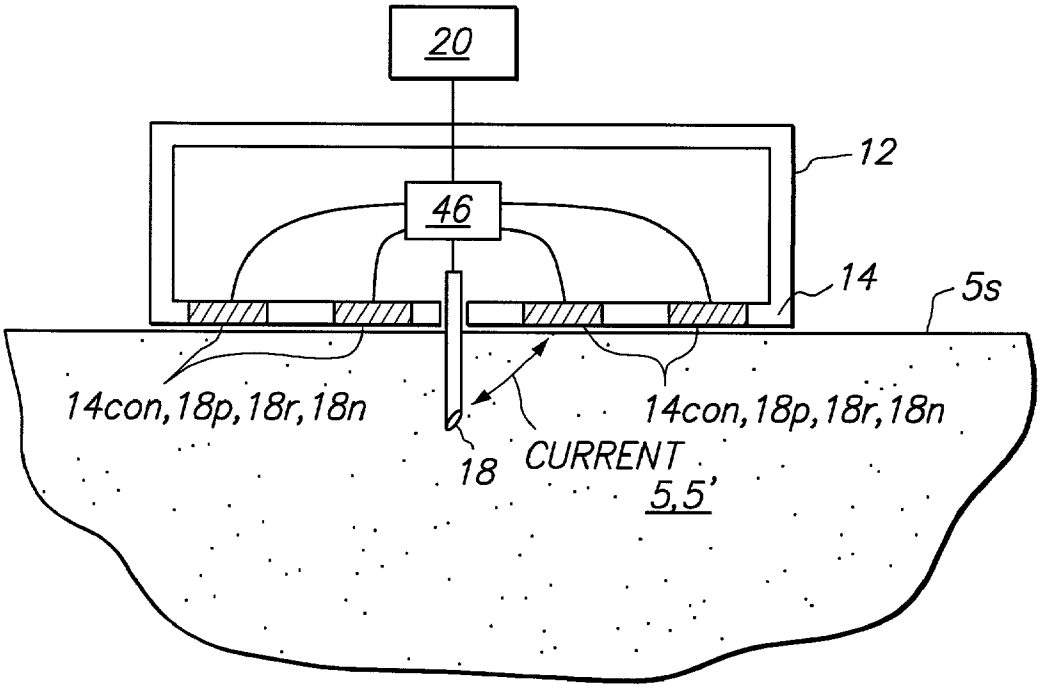
20
12
46
14
5s
14con,18p,18r,18n
14con,18p,18r,18n
18
CURRENT
5,5'

FIG. 47

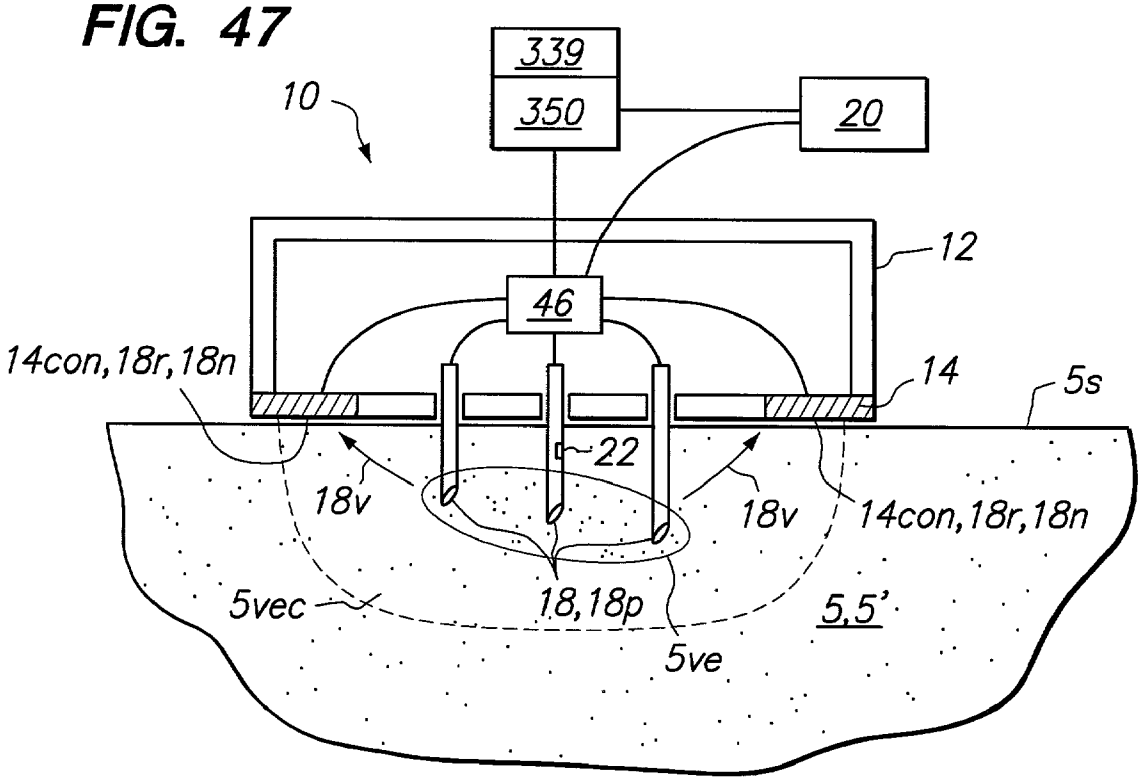
339
350
20
10
12
46
14con,18r,18n
14
5s
22
18v
18v
14con,18r,18n
5vec
18,18p
5,5'
5ve

FIG. 48

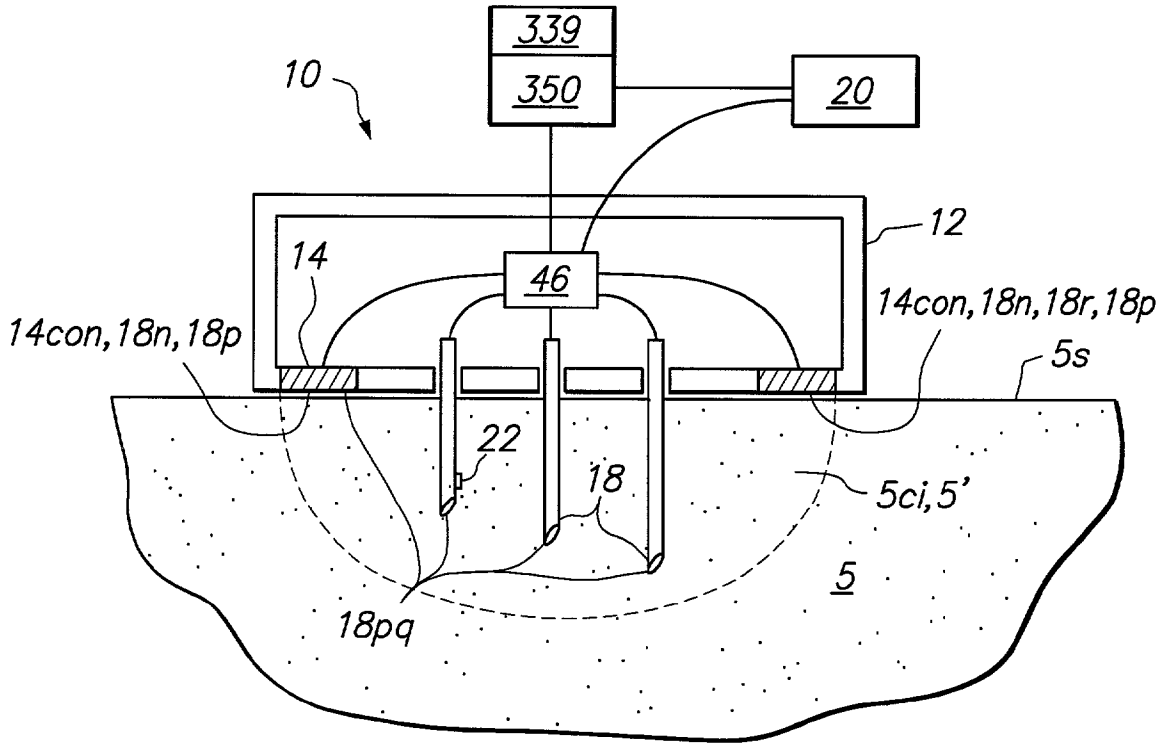
339
350
20
10
12
14
46
14con,18n,18p
14con,18n,18r,18p
5s
22
18
5ci,5'
5
18pq

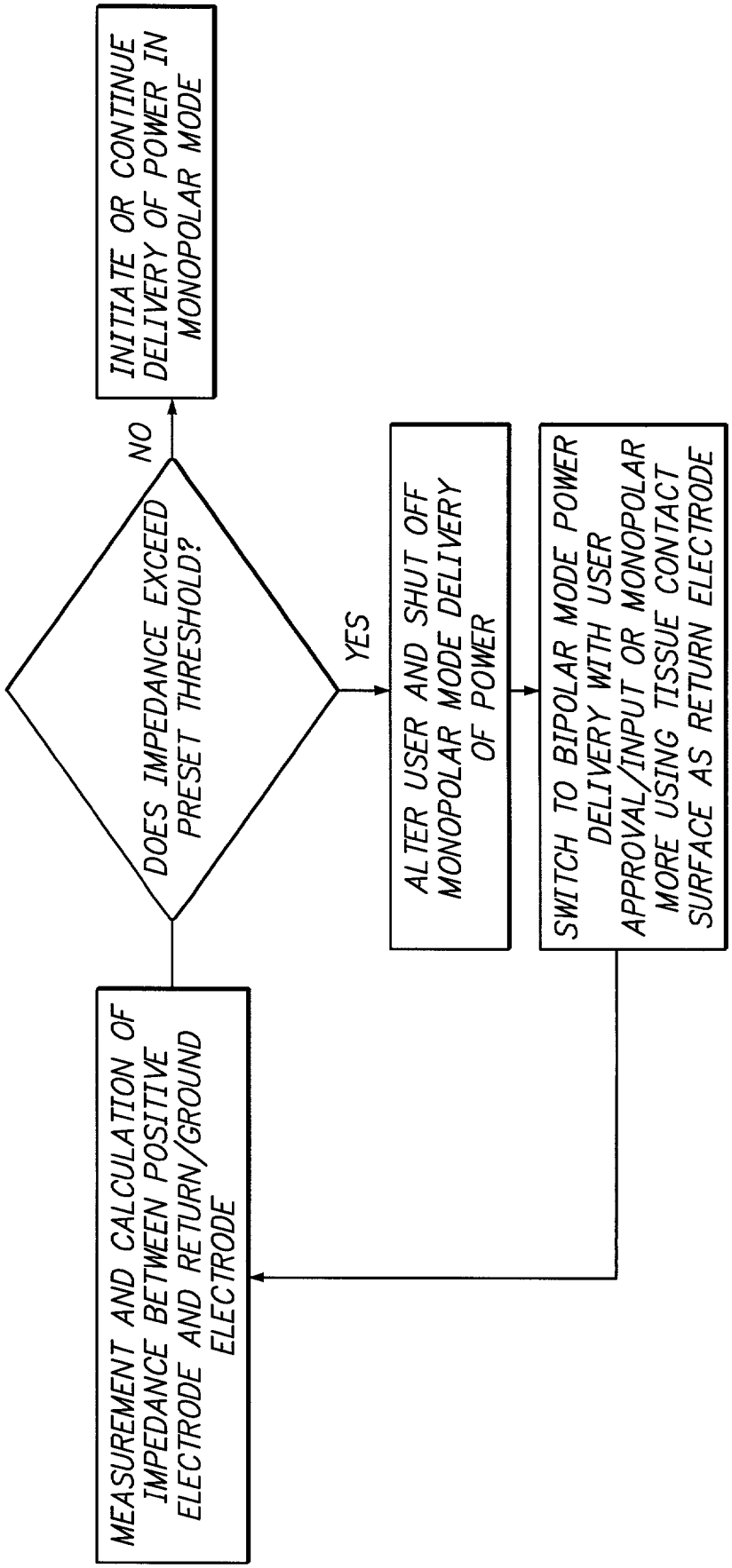
MEASUREMENT AND CALCULATION OF IMPEDANCE BETWEEN POSITIVE ELECTRODE AND RETURN/GROUND ELECTRODE
DOES IMPEDANCE EXCEED PRESET THRESHOLD?
NO
INITIATE OR CONTINUE DELIVERY OF POWER IN MONOPOLAR MODE
YES
ALTER USER AND SHUT OFF MONOPOLAR MODE DELIVERY OF POWER
SWITCH TO BIPOLAR MODE POWER DELIVERY WITH USER APPROVAL/INPUT OR MONOPOLAR MORE USING TISSUE CONTACT SURFACE AS RETURN ELECTRODE

FIG. 49A

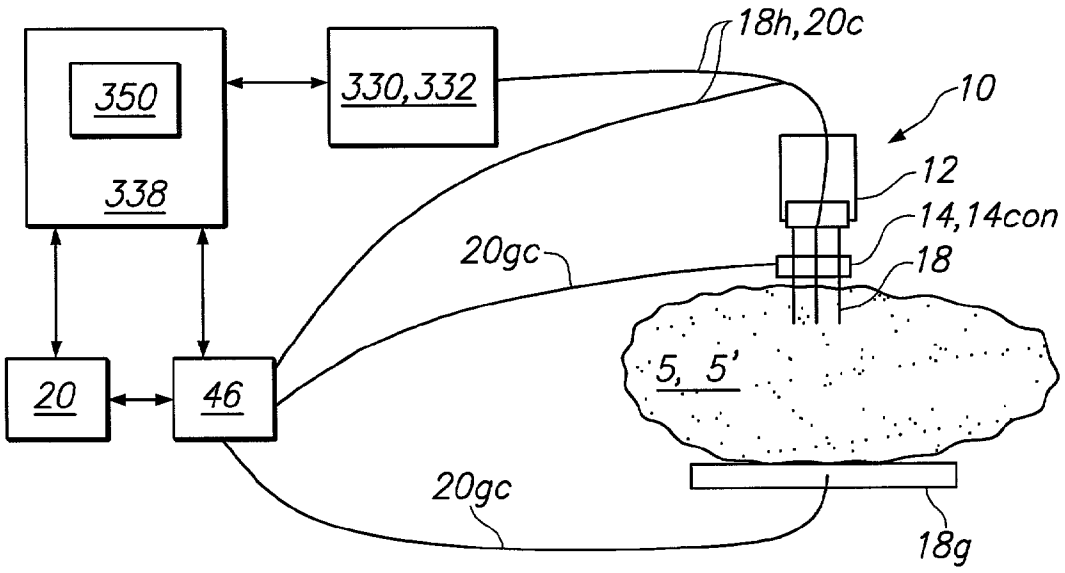

FIG. 49B

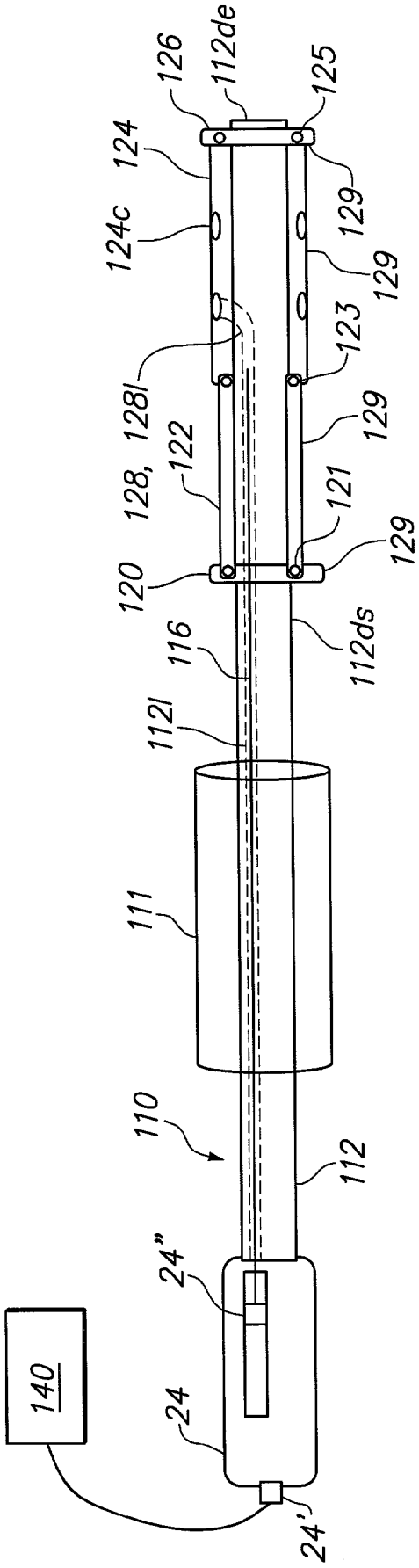
126
112de
125
124
129
124c
129
123
128l
129
128, 122
121
129
120
112ds
116
112l
111
110
112
24"
140
24
24'

FIG. 50A

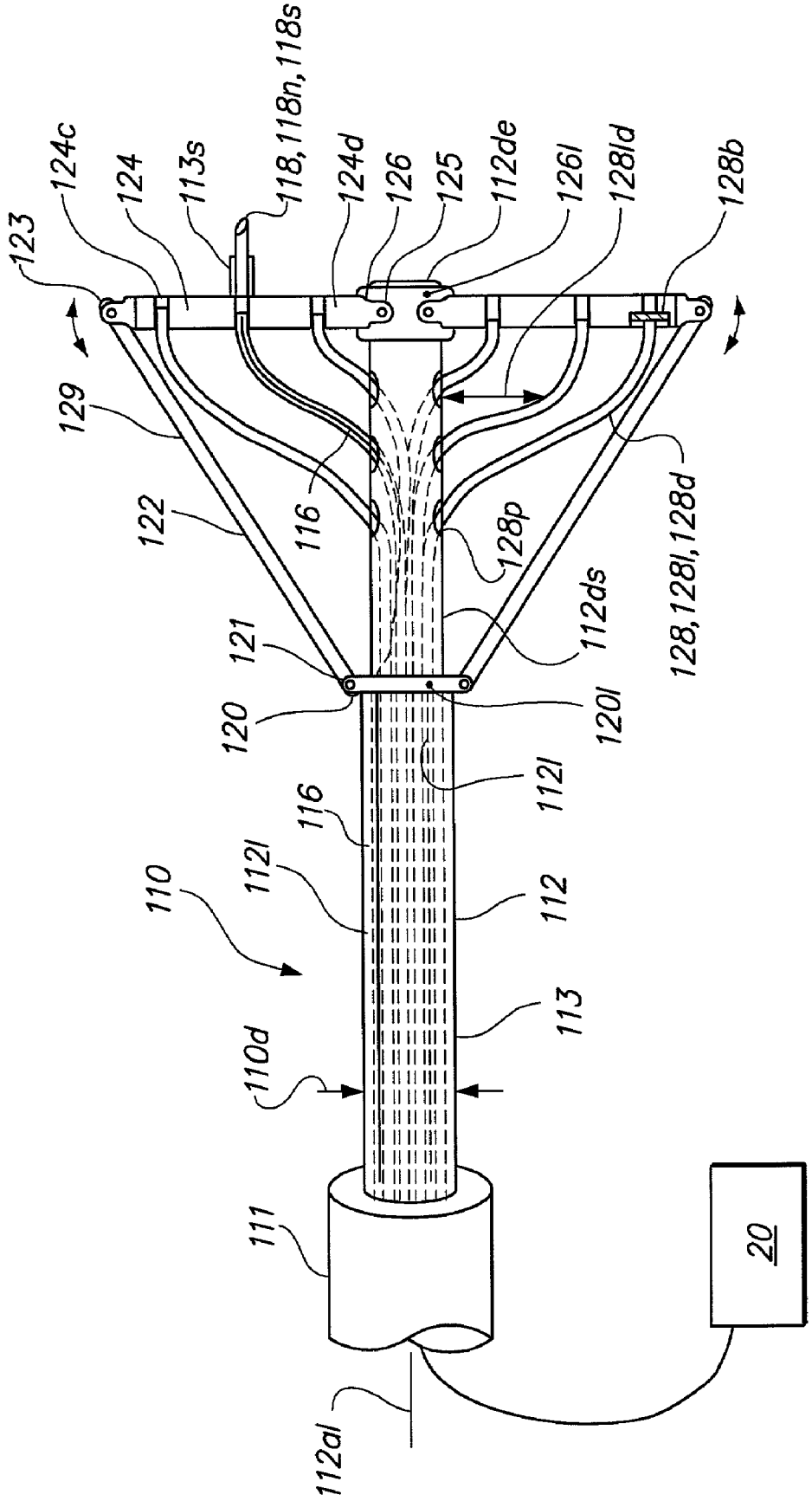
123
124c
124
113s
118,118n,118s
124d
126
125
112de
126l
128ld
128b
129
122
116
128p
128,128l,128d
112ds
121
120
120l
112l
116
112l
110
112
113
110d
111
20
112al

FIG. 50B

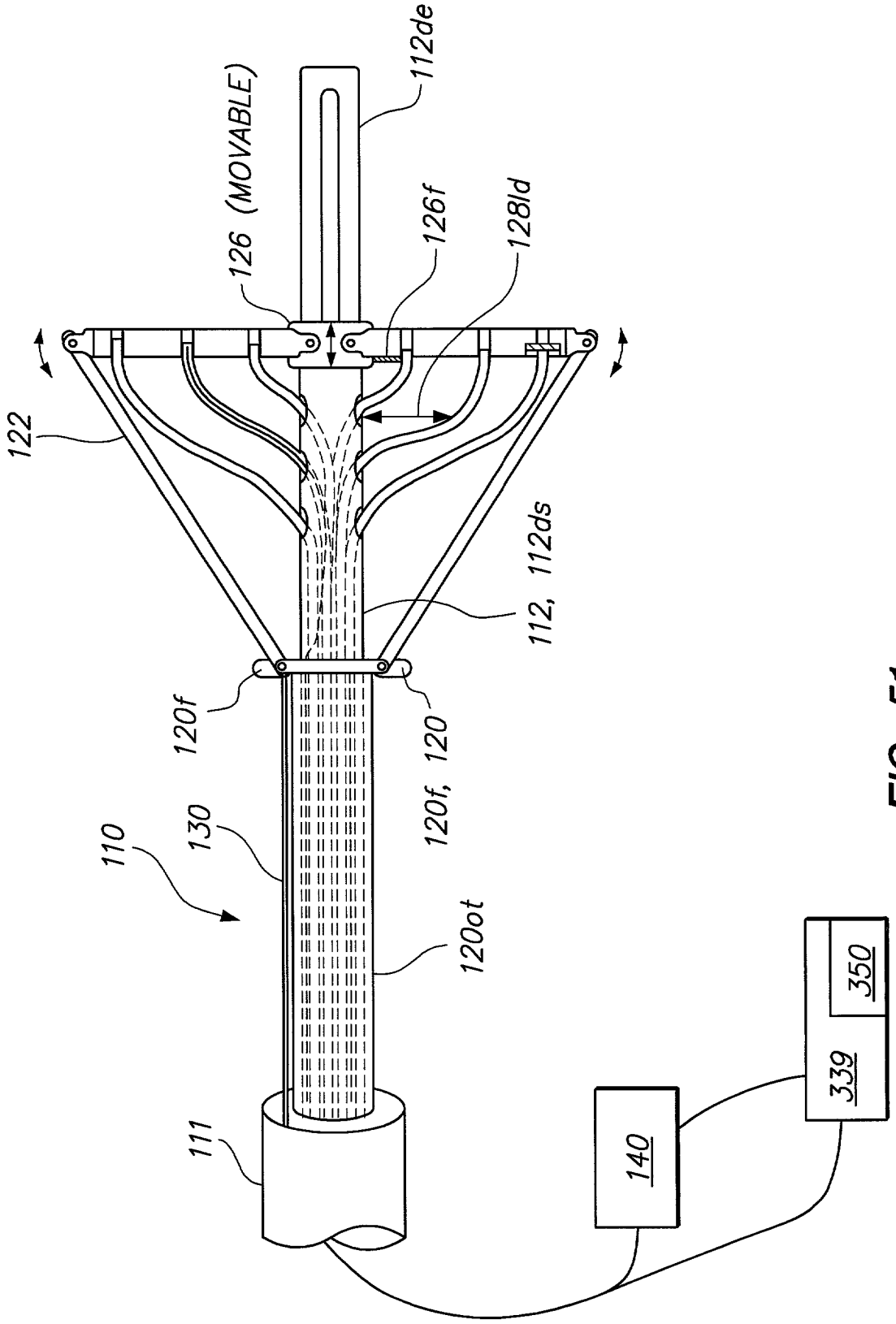
112de
126 (MOVABLE)
126f
128ld
122
112, 112ds
120f
120f, 120
110
130
120ot
111
140
339
350

FIG. 51

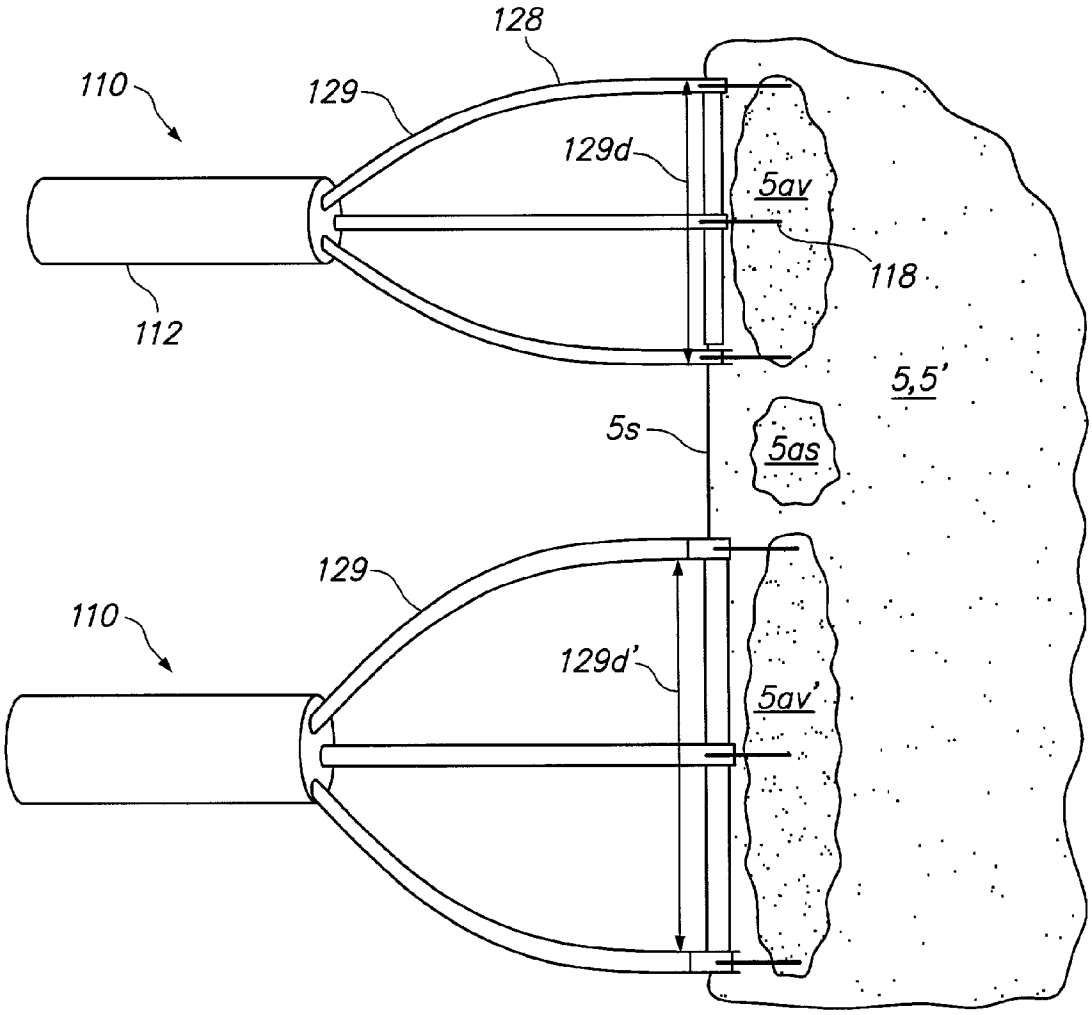

FIG. 52

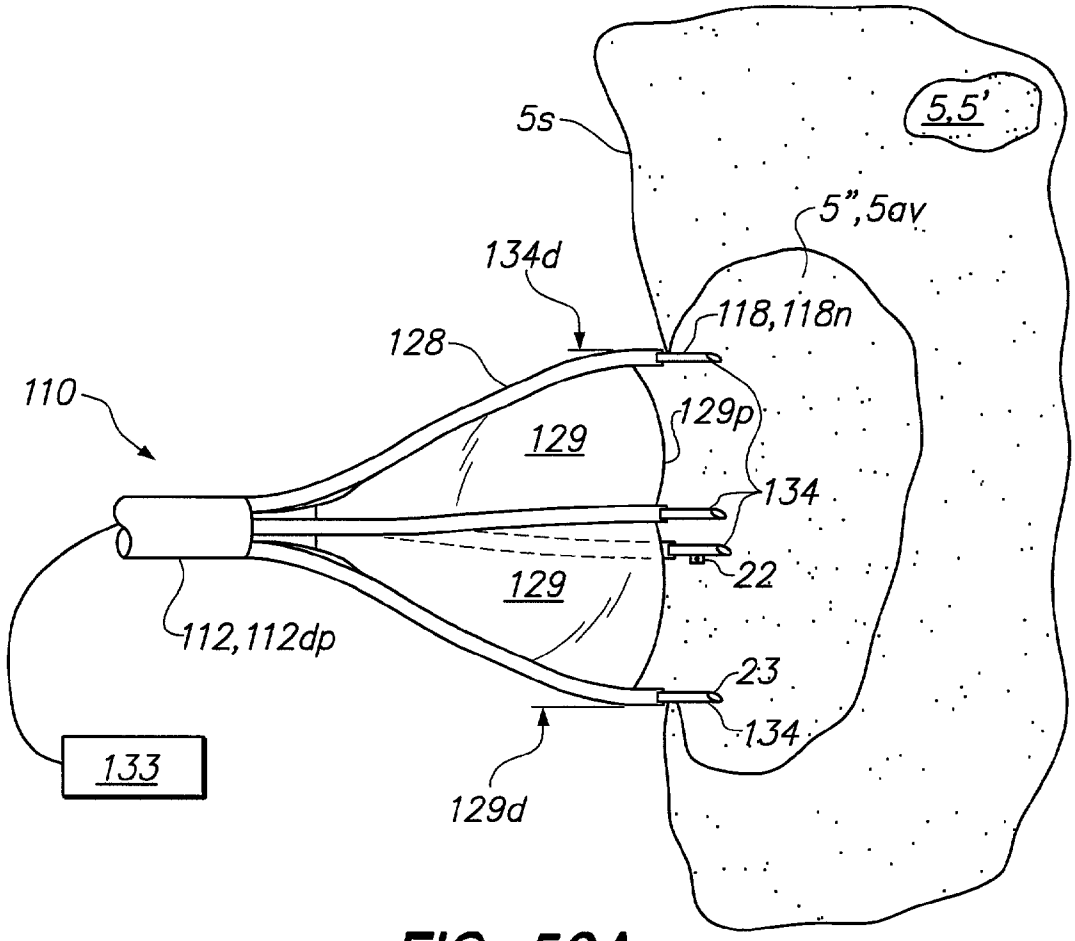

FIG. 53A

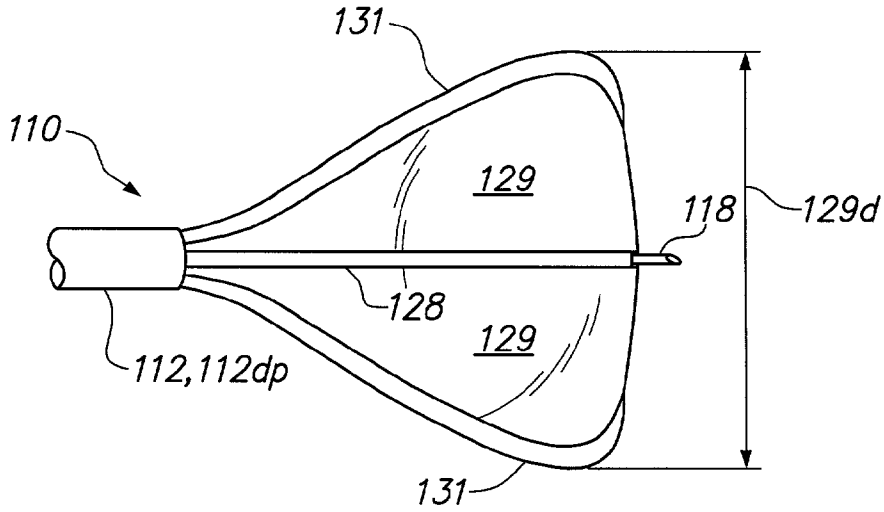

FIG. 53B

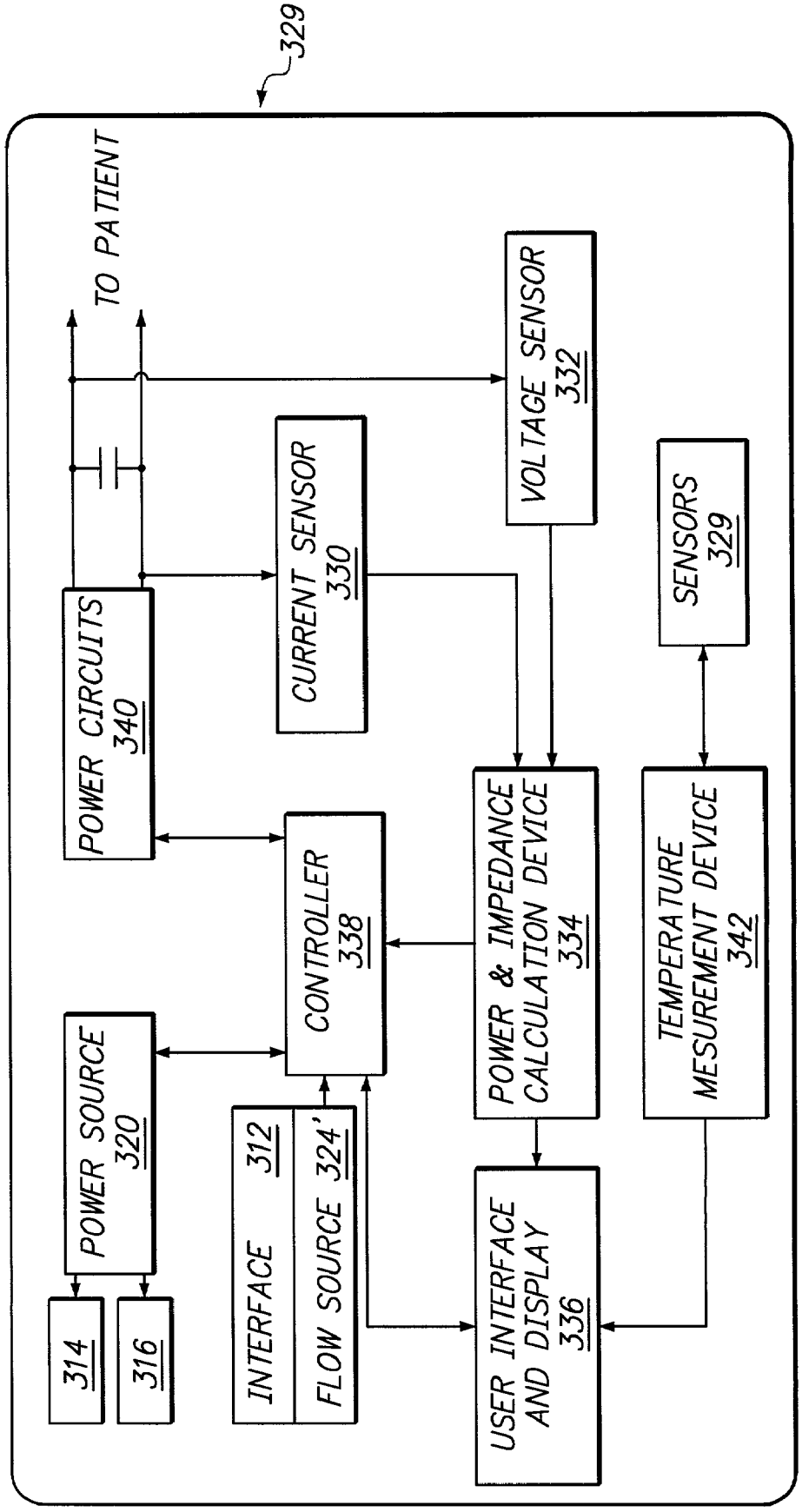
329
TO PATIENT
POWER CIRCUITS 340
CURRENT SENSOR 330
VOLTAGE SENSOR 332
SENSORS 329
CONTROLLER 338
POWER & IMPEDANCE CALCULATION DEVICE 334
TEMPERATURE MESUREMENT DEVICE 342
POWER SOURCE 320
314
316
INTERFACE 312
FLOW SOURCE 324'
USER INTERFACE AND DISPLAY 336

FIG. 54

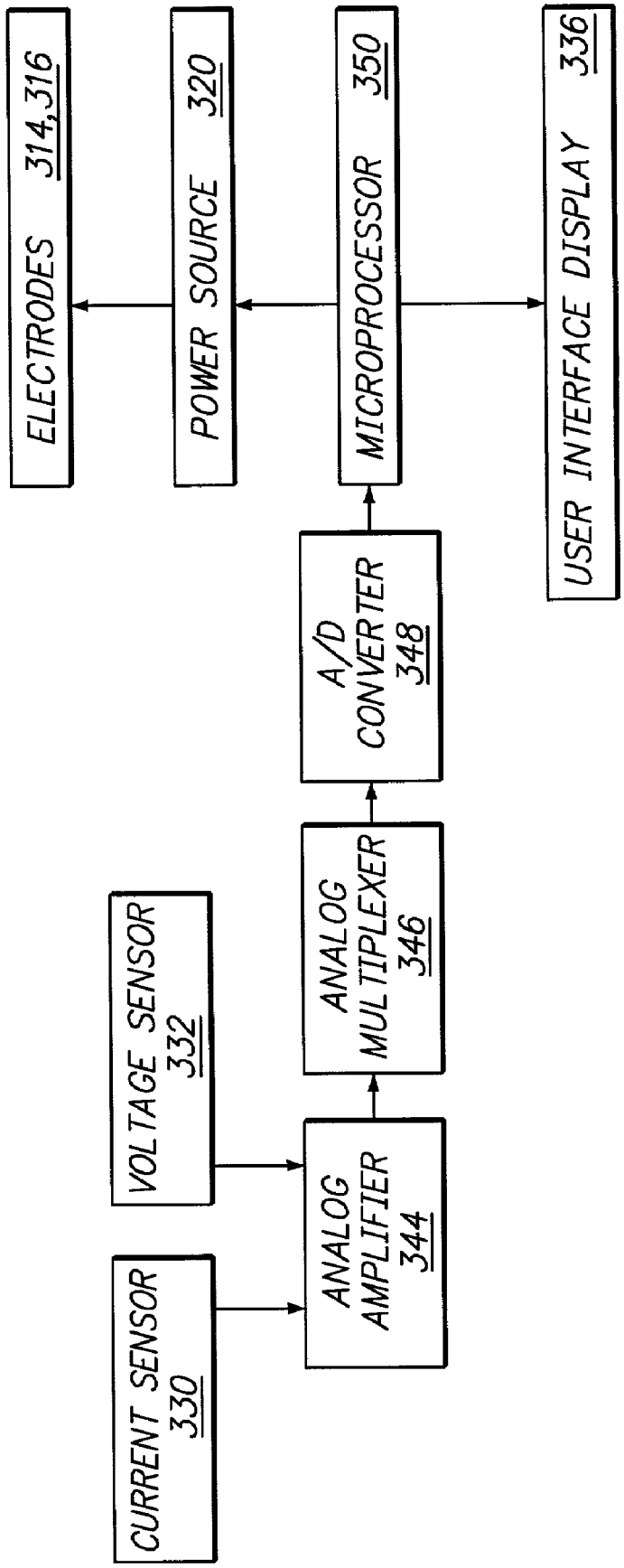
ELECTRODES 314,316
POWER SOURCE 320
MICROPROCESSOR 350
USER INTERFACE DISPLAY 336
A/D CONVERTER 348
ANALOG MULTIPLEXER 346
VOLTAGE SENSOR 332
ANALOG AMPLIFIER 344
CURRENT SENSOR 330

FIG. 55

TISSUE SURFACE TREATMENT APPARATUS AND METHOD

BACKGROUND OF THE INVENTION

[0001] 1. Field of the Invention

[0002] This invention relates generally to an apparatus and method for the minimally invasive treatment and ablation of tissue masses such as tumors, and more particularly to a tissue surface treatment apparatus with independently deployable electrodes configured to controllably ablate a tumor proximate or beneath a tissue surface.

[0003] 2. Description of the Related Art

[0004] Standard surgical procedure, such as resection, for treating benign and malignant tumors of the liver and other organs have several key shortcomings affecting efficacy, morbidity and mortality. In an effort to fully remove or resect the tumor, the surgeon may be forced to remove or injure healthy tissue, compromising the function of the target organ. Further, the surgeon must exercise care in not cutting the tumor in a manner that creates seeding of the tumor, resulting in metastasis and spread of the disease. Also surgical resection procedures are contraindicated for instances of diffuse disease and/or small amounts of remaining healthy tissue.

[0005] Ablative treatment methods such as radio-frequency ablation, cryoablation, and microwave ablation have been employed as an alternative to resection to treat benign and malignant tumors in organs such as the prostate. However, these therapies in their present form have several critical drawbacks including: (i) inability to ablate/necrose the entire tumor; (ii) inability to ablate or necrose tissue along the entire length/perimeter of the tumor margin; (iii) inability to reduce lesion size sufficiently to reduce pain levels; (iv) inability to treat smaller tumors without potentially damaging surrounding healthy tissue and/or critical organs and structures; (v) inability of introducer to deploy device at an angle or otherwise access difficult to reach tumors; and (vi) inability to determine a meaningful clinical endpoint

[0006] In particular tumors lying near or underneath an organ surface present a distinct set of problems to current ablative therapies. In order to superficially treat these type of tumors it is desirable for the physician to be able to deliver ablative treatment into the tumor, while avoiding all together or minimizing injury to critical anatomical structures that are adjacent and/or underneath the target tumor mass.

SUMMARY OF THE INVENTION

[0007] An embodiment of the invention provides a tissue surface treatment apparatus that includes a housing having a proximal end, a distal including a tissue contacting surface and an interior defined by the housing. A hand piece is coupled to the housing. The tissue contact surface has a plurality of apertures. An energy delivery device including at least one electrode is positionable in the housing interior. The at least one electrode includes a tissue penetrating distal end in substantial alignment with an aperture of the plurality of aperture. The at least one electrode is configured to be advanced from the housing interior through the aperture and into a target tissue site to define an ablation volume at least partly bounded by a tissue surface. An advancement device is coupled to the energy delivery device. The advancement device is at least partly positionable within at least one of the housing or the handpiece. The advancement device is configured to advance the at least one electrode from the housing interior into the target tissue site and completely withdrawal the at least one electrode into the housing interior. A cable is coupled to one of the housing or the energy delivery device. The cable is configured to be coupled to an energy source.

[0008] Another embodiment of the invention includes a switching device coupled to at least one of the at least one electrode, a power supply coupled to the at least one electrode or a ground pad electrode coupled to the power supply. Impedance measurement circuitry is coupled to the at least one of at least one electrode or the ground pad electrode. Logic resources are coupled to at least one of the impedance measurement circuitry or the switching device. The logic resources are configured to redirect at least a portion of a current flow going to the ground pad electrode responsive to an impedance change measured by the impedance measurement circuitry.

[0009] In still another embodiment, the energy delivery device includes a first electrode and a second electrode. The first electrode is deployable to a first depth and a second electrode is deployable to a second depth independent of the first depth.

[0010] In yet another embodiment, the handpiece includes a bendable or a curved portion. The bendable portion facilities access by the physician to difficult to reach areas of the liver such as a posterior portion or a portion adjacent or touching another anatomical structure.

[0011] In still another embodiment, the surface treatment apparatus includes a first RF electrode, a second RF electrode and a third RF electrode. Each of the first, second and third RF electrodes have a tissue piercing distal end and are positionable in the housing. The first and second RF electrodes are selectably deployable with curvature from the housing to a tissue site. The third RF electrode is deployable from the introducer with less curvature than the first and second RF electrodes.

[0012] Still yet another embodiment of the invention provides a tissue surface treatment apparatus that includes a housing having a proximal end, a distal end including a tissue contacting surface and interior defining by the housing. A handpiece is coupled to the housing. A fluid delivery device is positionable in the housing interior. The fluid delivery device includes at least one hollow non-conducting infusion member with at least one infusion aperture and a tissue penetrating distal end. The at least one infusion member is configured to be advanced from the housing interior and into a target tissue site to infuse a fluid into tissue and define a tissue infusion volume. The fluid delivery device is configured to be coupled to a fluid source. An advancement device is coupled to the fluid delivery device. The advancement device is at least partly positionable within at least one of the housing or the handpiece. The advancement device is configured to advance at least a portion of the at least one infusion member from the housing interior into the target tissue site and completely withdrawal the at least one infusion member into the housing interior. A conductor is coupled to at least one of the fluid delivery device or the at least one infusion member. The conductor is configured to be coupled to an energy source.

BRIEF DESCRIPTION OF THE FIGURES

[0013] **FIG. 1** is a lateral view illustrating the placement of a surface treatment apparatus to treat a tissue mass at or beneath a tissue surface in an embodiment of the method of the present invention.

[0014] **FIG. 2** is a lateral view illustrating the components of an embodiment of a surface treatment apparatus including the housing, tissue contacting surface, energy delivery device and advancement member.

[0015] **FIG. 3** is a lateral view illustrating an embodiment of the housing.

[0016] **FIGS. 4*a*-4*e*** are lateral views illustrating embodiments of the housing having various coatings.

[0017] **FIGS. 5*a*-5*e*** are lateral views of the tissue-contacting surface illustrating various contours of the surface as well as the shape of the surface edge including radiused and tapered edges

[0018] **FIG. 6** is lateral view illustrating placement and use of an embodiment of the invention having a conformable tissue surface.

[0019] **FIGS. 7*a*** and **7*b*** are perspective views illustrating an embodiment of a movable tissue contacting surface.

[0020] **FIG. 8** is a lateral view illustrating an embodiment of a bendable tissue contacting surface with hinged sections.

[0021] **FIGS. 9*a*** and **9*b*** are lateral and bottom views illustrating an embodiment of a bendable tissue contacting surface with articulated sections.

[0022] **FIG. 10** is a lateral view illustrating an embodiment of a porous tissue contacting surface including delivery of a fluid film.

[0023] **FIG. 11** is a lateral view illustrating an embodiment of a porous tissue contacting surface including a flexible lip.

[0024] **FIGS. 12*a*** and **12*b*** are lateral views illustrating use of an inflatable porous tissue contacting surface.

[0025] **FIGS. 13*a*** and **13*b*** are lateral views illustrating use of a vacuum source coupled to porous tissue contacting surface.

[0026] **FIG. 14** is a lateral view illustrating the angle of an aperture positioned in the housing for purposes of electrode advancement in an embodiment of the invention.

[0027] **FIGS. 15*a*-15*c*** are lateral views illustrating various alignments for the aperture and electrodes of the embodiment in **FIG. 14**.

[0028] **FIG. 15*d*** is a lateral view illustrating an embodiment of the tissue contact surface having tissue access ports.

[0029] **FIG. 16** is a lateral view illustrating the configuration and use of an embodiment of a disk-shaped advancement member.

[0030] **FIG. 17** is a lateral view of an embodiment of a disk-shaped advancement member integral to the housing.

[0031] **FIG. 18** is a cross sectional view illustrating the placement of electrodes with the advancement member.

[0032] **FIG. 19** is a cross sectional view illustrating the use of a printed circuit board in the advancement member.

[0033] **FIG. 20*a*** is a lateral view illustrating an embodiment utilizing a push rod to advance the advancement member as well as the use of springs for retracting the advancement member.

[0034] **FIG. 20*b*** is a lateral view illustrating an embodiment utilizing a motor or solenoid to advance the advancing the advancement member.

[0035] **FIG. 20*c*** is a lateral view illustrating an embodiment utilizing pneumatic means to advance the advancing the advancement member as well as the use of vacuum source.

[0036] **FIG. 20*d*** is a lateral view illustrating an embodiment utilizing an inflatable balloon to advance the advancing the advancement member.

[0037] **FIG. 20*e*** is a lateral view illustrating an embodiment wherein the advancement member includes a cam to advance the advancement member

[0038] **FIG. 21** is a lateral view illustrating an embodiment of an advancement member comprising one or more pushable advancement members with coupled electrodes.

[0039] **FIG. 22** is a perspective view illustrating the use of the embodiment of the apparatus of **FIG. 21**.

[0040] **FIGS. 23*a*-23*f*** are lateral views illustrating various configurations of the electrode including ring-like, ball, hemispherical, cylindrical, conical and needle-like.

[0041] **FIG. 24** is lateral view illustrating an embodiment of a needle electrode configured to penetrate tissue.

[0042] **FIG. 25** is lateral view illustrating a needle electrode having at least one radii of curvature.

[0043] **FIG. 26** is a perspective view of a surface treatment apparatus that includes insulation sleeves positioned at exterior surfaces of the electrodes so as to define an energy delivery surface.

[0044] **FIG. 27** is a perspective view of a surface treatment apparatus of the present invention that includes multiple insulation sleeves that circumferentially insulate selected sections of the electrodes.

[0045] **FIG. 28** is a perspective view of a surface treatment apparatus of the present invention with insulation that extends along longitudinal sections of the electrodes to define adjacent longitudinal energy delivery surfaces.

[0046] **FIG. 29** is a cross-sectional view of the surface treatment apparatus of **FIG. 28**.

[0047] **FIG. 30*a*** is a lateral view illustrating an embodiment of the apparatus with an electrode having a lumen and apertures configured for the delivery of fluid and the use of infused fluid to create an enhanced electrode.

[0048] **FIG. 30*b*** is a lateral view illustrating of embodiment of the apparatus configured for the delivery of cooling solution to the electrode and surrounding tissue.

[0049] **FIG. 31** is a lateral view illustrating an embodiment of a surface treatment apparatus including a handpiece.

[0050] **FIG. 32***a* is a lateral view illustrating an embodiment of the handpiece configured to be coupled to fluid delivery and aspirating devices.

[0051] **FIG. 32***b* is a lateral view illustrating an embodiment of the handpiece including a positioning fixture and/or a template for control of the deployment of electrodes into tissue.

[0052] **FIG. 33** is a lateral view illustrating an embodiment of the handpiece including a curved portion.

[0053] **FIG. 34** is a lateral view illustrating an embodiment of the handpiece including a bendable portion.

[0054] **FIG. 35** is a lateral view illustrating an embodiment of a surface treatment apparatus having a handpiece configured to controllably manipulate the tissue contact surface.

[0055] **FIGS. 36***a* and **36***b* are lateral views illustrating an embodiment of the surface treatment apparatus with electrodes in a non-deployed and deployed state.

[0056] **FIG. 37** is a lateral view illustrating an embodiment of the surface treatment apparatus having an array of electrodes.

[0057] **FIG. 38***a* is a perspective view illustrating an embodiment having a rectangular array of electrodes

[0058] **FIG. 38***b* is a lateral view illustrating the spacing between electrode rows for the embodiment of **FIG. 38***a*.

[0059] **FIG. 39** is a lateral view illustrating an embodiment of the housing having a stop configured to control electrode penetration depth.

[0060] **FIG. 40** is a lateral view illustrating an embodiment of the housing having a movably adjustable stop.

[0061] **FIG. 41** is a schematic view illustrating an embodiment of the apparatus having multiplexed electrodes configured to produce spatial and temporal patterns of energy delivery.

[0062] **FIG. 42** is a schematic view illustrating an embodiment of the power supply having multiple independent channels to each electrode.

[0063] **FIG. 43** is a schematic view illustrating use of a ground pad electrode for monopolar embodiments of the invention.

[0064] **FIGS. 44***a*-**44***c* are schematic views illustrating configurations of the electrodes in bipolar embodiments of the invention, **FIG. 44***a* shows embodiment with a single positive and negative electrode, **FIG. 44***b* shows a multiple positive electrodes in circular pattern with a centrally located return electrode, **FIG. 44***c* shows an arc shaped pattern of positive electrodes with a single return electrode.

[0065] **FIG. 45** is a schematic view illustrating an embodiment of tissue contact surface having a conductive tissue portion employed in monopolar and bipolar modes.

[0066] **FIG. 46** is a schematic view illustrating an embodiment of the tissue contact surface having multiple conductive portions.

[0067] **FIG. 47** is a schematic view illustrating an embodiment of a conductive tissue contact surface used to generate and control a current/energy vector within the target tissue volume.

[0068] **FIG. 48** is a schematic view illustrating an embodiment of the surface treatment apparatus having a phased array of electrodes.

[0069] **FIG. 49***a* is a flow chart illustrating an embodiment of a method of the invention utilizing an algorithm to switch between monopolar and bipolar modes based on measurement of tissue impedance.

[0070] **FIG. 49***b* is schematic view of an embodiment of an apparatus for performing the method of **FIG. 49***a*.

[0071] **FIGS. 50***a* and **50***b* are lateral views illustrating embodiments of a collapsible strut surface treatment apparatus in a non-deployed and deployed state having a fixed distal hub.

[0072] **FIG. 51** is a lateral view illustrating an alternative embodiment of the collapsible strut surface treatment apparatus having a movable distal hub.

[0073] **FIG. 52** is a lateral view illustrating the use of the embodiment of **FIG. 50***b* or **FIG. 51** to produce multiple ablation volumes.

[0074] **FIG. 53***a* is a lateral view illustrating an embodiment of a collapsible surface treatment apparatus utilizing an expandable balloon device.

[0075] **FIG. 53***b* is a lateral view illustrating an embodiment of a collapsible surface treatment apparatus utilizing an expandable balloon device with a restraining member.

[0076] **FIG. 54** is a block diagram illustrating a controller, power source, power circuits and other electronic components used with an embodiment of a control system other embodiments of the invention.

[0077] **FIG. 55** is a block diagram illustrating an analog amplifier, analog multiplexer and microprocessor used with an embodiment of a control system other embodiments of the invention.

DETAILED DESCRIPTION

[0078] In order to superficially treat organ tumors (e.g. hepatic tumors), particularly those near the tissue surface it is desirable for the physician to be able to deploy electrodes into the tumor while avoiding and minimizing injury to adjacent critical anatomical structures that are adjacent and underneath the target tumor mass.

[0079] The present invention provides an apparatus and method to address this and other need in performing surface treatment of tissue masses and tumors such as liver tumors using both open chest procedures and minimally invasive procedures. In particular, embodiments of the invention are configured to selectively deploy individual electrodes or an array of electrodes into a tumor or tissue mass so as to achieve a particular pattern to precisely treat the tumor while avoiding adjacent critical anatomical structures such as vasculature (e.g. hepatic veins) and nerve plexi. Further, the apparatus of the present invention allows the electrodes to be deployed to a selective depth again to solve the problem of deploying electrodes into the tumor mass while avoiding deeper healthy tissue. In a preferred embodiment, the electrodes are deployable to a depth of 1.5 cm.

[0080] Also, various embodiments are configured to treat not only accessible anterior portions of the liver but also

posterior portions and/or portions obstructed by overlying or adjacent tissue and other organs and tissue. This capability is achieved through the use of components with sufficient flexibility and resiliency to bend, curve around or conform to tissue and anatomical structures including organs, bone and vasulature. Components of the apparatus of the invention having this flexibility can include the handpiece, housing and tissue contact surface described in detail herein. This flexibility enables the apparatus to not only be readily manipulated and positioned in at least partially obstructed tissue but also to deliver energy, fluids and apply pressure to and on obstructed or otherwise difficult to reach target tissue sites.

[**0081**] Referring to **FIGS. 1 and 2**, **FIG. 1** shows an embodiment of surface treatment apparatus **10** to superficially treat a tumor mass **5**" in a target tissue site **5**' at or beneath the surface **5***s* of tissue **5** by delivering energy to produce an ablation volume **5***av*. As shown in **FIG. 2** apparatus **10** includes a housing **12** that has a proximal and distal portion **12***p* and **12***d* and an interior space **12***i*. All or a portion of housing **12** can be configured to contact a tissue surface **5***s* at a target tissue site **5**'. In an embodiment housing **12** includes a tissue contacting surface **14** positioned at distal portion **12***d*. Tissue contacting surface **14** can have one or more apertures **14***a*. An electrode advancement member **16** is positionable within the housing and coupled to one or more energy delivery devices **18**. The energy delivery devices **18** can have distal ends **18***de* sufficiently sharp to penetrate tissue electrodes. Energy delivery devices **18** are positionable within the housing **12** and configured to be advanced out of the apertures **14***a* into tissue to a target tissue site **5**'. Energy delivery device **18** can be configured to be coupled to an energy or power source **20**. A sensor **22** may be coupled to energy delivery device **18**, as well as housing **12** including tissue contacting surface **14**. Sensors **22** can be configured to measure temperature, impedance or other physical properties of the housing, energy delivery device and adjacent tissue.

[**0082**] A variety of energy delivery devices and power sources can be utilized by embodiments of the invention. Specific energy delivery devices **18** and power sources **20** that can be employed in one or more embodiments include, but are not limited to, the following: (i) a microwave power source coupled to a microwave antenna providing microwave energy in the frequency range from about 915 MHz to about 2.45 GHz; (ii) a radio-frequency (RF) power source coupled to an RF electrode; (iii) a coherent light source coupled to an optical fiber or light pipe; (iv) an incoherent light source coupled to an optical fiber; (v) a heated fluid coupled to a catheter with a closed or at least partially open lumen configured to receive the heated fluid; (vi) a cooled fluid coupled to a catheter with a closed or at least partially open lumen configured to receive the cooled fluid; (viii) a cryogenic fluid; (ix) a resistive heating source coupled to a conductive wire; (x) an ultrasound power source coupled to an ultrasound emitter, wherein the ultrasound power source produces ultrasound energy in the range of about 300 KHZ to about 3 GHz; and (xi) combinations thereof. For ease of discussion for the remainder of this application, the energy delivery device **18** is one or more RF electrodes **18** and the power source utilized is an RF power supply. However all energy devices and sources discussed herein are equally applicable.

[**0083**] Housing **12** can have a variety of shapes including rectangular, circular, oval and pyramidal. Referring to **FIG. 3**, in a preferred embodiment housing **12** has a cylindrical shape, in which the proximal and distal ends **12***p* and **12***d* comprise the two ends of the cylinder with a wall **12***w*. Ends **12***p* and **12***d* can be fixed attached to the body of the cylinder **12***b* or can be movable therein which can include sliding and reciprocal movement. Housing **12** can be fabricated from a variety of polymers known in the art including rigid polymers, including but not limited to polycarbonate, acrylic, polyester, ABS and combinations thereof using injection molding or rim methods known in the art. Also housing **12** can be machined from both plastics and metals such as aluminum, stainless steal and the like, using machining methods known in the art. Housing **12** can also be made from flexible metals such as or from compliant or resilient polymers that enable housing **12** to be flexible in one or more directions. Examples of flexible metals include, but are not limited to, nickel titanium alloys. Examples of resilient polymers include, but are not limited to, elastomers including silicone, polyurethane, PEBAX and combinations thereof. Flexibility of housing **12** can also be achieved through the use of an accordion or bellow construction of housing walls **12***w*. Also in an embodiment all or portions of housing **12** can have transparent portions or viewing ports **12***v* made of transparent polymers such as polycarbonate so as to enable the physician to observe the tissue contacted by the housing as well as the position and advancement of the energy delivery devices there into. In use, this embodiment not allows the physician to observe the tissue during placement of the housing **12** but also during the delivery of thermal energy to tissue site **5**" and thus observe tissue blanching and other color changes indicative of the size of the developing ablation volume.

[**0084**] Referring to **FIGS. 4***a*-**4***e*, in various embodiments all or a portion of housing **12**, including tissue contacting surface **14** can have a coating **12***c* which can be an insulative coating **12***ic*, an electrical conductive coating **12***ec*, a lubricous coatings **12***ic* or a thermally reflective coating **12***tr*. These and other coatings can be applied using dip coating, spray coating, electrodeposition, plasma coating, lithographic and other coating methods known in the art.

[**0085**] For purposes of this application, an insulative coating is defined to be both an electrical and a thermal insulative coating. In a preferred embodiment, tissue contact surface **14** has an insulative coating **12***ic* that insulates against the transmission of RF energy. Coating **12***ic* can be made from electrically and thermally insulative polymers known in the art including, but not limited to, polyamide, polyamide fluorocarbons, PTFE and TEFLON. Such coatings can range in thickness **12***ct* from 0.0001 to 0.1 inches with a preferred embodiment of 0.001 to 0.003 inches. Also in an embodiment, coating **12***ic* can be a pealable coating so as to be detachable or movable on housing **12**, enabling the user to create a selectable insulative portion **12***ip*. Coating **12***ic* can be configured to be pealable and reattachable using re-attachable, low strength adhesives known in the art.

[**0086**] In a related embodiment, coating **12***c* can be a non-stick or lubricous coating **12***ic* configured to keep surface **14** or other portion of housing **12** or energy delivery **18** from sticking to tissue surface **5***s* before during or after ablation. This solves the problem of coagulated or burnt tissue unwantly sticking to surface **14** preventing its removal

and/or causing unwanted tearing and other trauma to tissue surface **5***s* or tissue **5**. Such coatings can include PTFE, TEFLON and other fluorocarbon polymers, silicones, paralene and other low surface tension non-stick coatings known in the art.

[**0087**] In another embodiment, coating **12***c* can be a thermally reflective coating **12***trc*. Examples of thermal reflective coating include metal coatings such as aluminum coating, silver coating, alloys thereof and the like. In use thermal reflective coating **12**trc on contact surface **14** serves to reflect radiated heat back into the tissue surface at the target site **5**' and thereby increase the rate of heating of the tissue site **5**' including tissue mass **5**" resulting in faster and larger ablation volumes with less delivered power.

[**0088**] In still another embodiment coating **12***c* can be a textured coating **12***tc* configured to increase the coefficient of friction with tissue surface **5***s*. In use, this serves to stabilize contact surface **14** on tissue surface **5***s* and/or reduce movement of contact surface. Suitable coatings and patterns can include high friction polyurethane-polyether or polyester polymer coatings carbide coatings, knurled and diamond pattern coatings and the like known in the art.

[**0089**] Turning now to a discussion of the tissue contacting surface **14** (also called tissue contact surface **14**), this component can have a variety of shapes including but not limited to circular, oval, rectangular, square and combinations thereof. Referring now to **FIGS. 5***a* to **5***e*, contact surface **14** can have a variety of contours **14***ctr* including curved contours including convex or concave curved contours and combinations thereof. Additionally, the edges **14***e* of contacting portion **14** can be tapered **14***t* or radiused **14***r*.

[**0090**] Referring to **FIG. 6**, in various embodiments all or a portion of the tissue contact surface **14** can be a conformable surface **14***c* that conforms or bends to the shape of tissue surface **5***s*. This can be accomplished by constructing all or a portion of surface **14** from resilient polymers including but not limited to elastomers such as silicone and polyurethane and polymers thereof as wells as foam rubber. Surface **14***c* can be fabricated from such materials using injection molding or mandrel dip coating methods known in the art.

[**0091**] In use, a conformable or movable surface solves the problem of assuring and maintaining contact with an uneven or obstructed tissue surface before, during or after the ablation without causing undesired tissue trauma. In a related embodiment, a conformable surface **14***c* can also be coupled to a deflecting mechanism described herein to allow the physician to remotely deflect or shape contact surface **14** to a shape to that at least partially matches that of a selected target tissue surface **5***s* or otherwise facilitates positioning of surface **14** on target tissue surface **5***s*. This embodiment solves the problem of allowing the physician to position surface **14** when the target tissue surface **5***s* is obstructed by tissue and anatomical structures or is otherwise in a difficult position to reach.

[**0092**] Referring to **FIGS. 7***a* and **7***b*, in another embodiment the tissue contacting surface **14** is movable (longitudinally or otherwise) in response to force applied by the tissue surface onto the tissue surface **14**. This can be achieved through a variety of known spring mechanisms including constructing surface **14** on a movable cylinder or sleeve **14***ms* which can travel under or over housing **12** and then positioning and coupling one or more compressed coiled springs **14***sprg* to and between the surface **14** and housing **12**. This embodiment solves the problem of assuring and maintaining contact with the tissue surface before, during or after the ablation without causing undesired tissue trauma due to the application of excessive force to the tissue.

[**0093**] Referring to **FIGS. 8, 9***a* and **9***b* in other embodiments surface **14** can comprise one or more bendable sections **14***b*. In an embodiment shown in **FIG. 8**, bendable sections **14***b* can include hinges **14***h*' to allow surface **14** to be moved and shaped by the physician prior to or during application of surface **14** to the target tissue surface. The hinges **14***h*' used can include those known in the art including spring loaded hinges giving the bendable sections **14***b* shape resilience. Hinges **14***h*' can also include bearings, roller bearings, and miniature bearings such as those manufactured by RMB Miniature Bearings (Biel-Bienne, Switzerland). In a related embodiment shown in **FIGS. 9***a* and **9***b*, all or portion of surface **14** can include articulated sections **14***as* fabricated using known methods of articulated construction such as use of corrugated sections made using molding methods known in the art. Articulated sections **14**as have a sufficient number of articulations **14***as*' to allow robust movement of surface **14** in one or more directions. Articulated sections **14***as* can be configured to bend or deflect with a selectable amount of applied force which can be in the range of 0.01 to 2 lbs with specific embodiment of 0.05, 0.1, 0.25, 0.5 and 1 bl of force.

[**0094**] Referring to FIGS. **10-14**, in various embodiments, all or a portion of surface **14** including conformable surface **14***c* can be constructed from a porous material fluidically coupled to a fluid source and/or fluid delivery device described herein. In an embodiment shown in **FIG. 10, a** porous portion or section **14***p* of surface **14** is configured to deliver a fluid film **14***ff* to target tissue surface **5***s*. Porous portion **14***p* can be made from a porous membrane or other porous material. Suitable porous materials can include but are not limited to foam, foam rubber, polyurethane foam, cellulose and woven or knitted DACRON, knitted polyester, continuous filament polyester, polyester-cellulose, rayon, polyamide, polyurethane, polyethylene and the like. The delivery of a fluid film in this manner can be configured to perform one or more of the following functions: (i) produce a virtual fluid electrode adjacent or in the tissue surface to uniformly deliver RF energy to the selected tissue surface and underlying tissue when using a conductive solution; (ii) produce a virtual and electrically uniform ground pad electrode on the selected tissue surface to act as a return path for RF energy when using a conductive solution; and (iii) provide cooling over the selected tissue surface when a cooling solution is used which can also be a conductive solution. Porous surface **14***ps* can have selectable and/or variable amounts of porosity. In one embodiment, porous portion **14***p* has uniform porosity and thickness so as to be able to achieve a substantially uniform delivery of fluid over porous portion surface **14***ps*. In another embodiment the porosity is varied over portion **14***p* including surface **14***ps* to produce varying amounts of fluid flow. For example, higher porosity on the perimeter to produce greater flows on the perimeter or edges of section **14***p* or alternatively greater porosities in the center portion. Also the porosity of section **14***p* can be controlled to retain fluid within the interior of section **14***p* in order to have section **14***p* act as a virtual or

enhanced electrode **40** (described here in) including a virtual flexible electrode. Alternatively, one or more RF electrodes, such as plate or ring shaped RF electrodes **18**, may be positioned within section **14***p* to both cool the electrode and conduct RF energy to section **14***p* to allow section **14***p* to act as an RF electrode to deliver RF energy to tissue surface **5***s* and underlying tissue.

[**0095**] As shown in **FIG. 11**, porous section **14***p* can include a flexible lip or gasket section **14***pg* to trap or otherwise contain the fluid film between contact surface **14** and tissue surface **5***s*. Gasket section **14***pg* can be made out of resilient polymers including elastomers such as silicone and can be located anywhere along surface **14** including all or a portion of the perimeter **14***pmt* of contact surface **14**.

[**0096**] As shown in **FIGS. 12***a* and **12***b*, in related embodiments the porosity of porous portions **14***p* can be used to control the flexibility stiffness of surface **14** by retaining greater or lesser amounts of fluid within section **14***p* to control its hydrostatic pressure (when the surface is coupled to a pressurized fluid delivery device such as an IV pump) and effectively inflate or deflate the section **14***p* (similar to an inflatable balloon) to a desired stiffness and shape. This can also be done by controlling the fluid pressure of the fluid delivery device **28** or fluid source **30** coupled to porous section **14***p*. Shape and conformability of porous surface **14***p* can also be controlled by controlling the viscoelasticity of the inflationary media/fluid **27**. In an embodiment, the inflation media **27** can be a viscoelastic gel such as a silicone gel or a conductive gel such as a carboxymethylcellulose gel mixed with saline solution. The viscosity of inflation media **27** can range between 1-100 centipoise with specific embodiments of 5, 10, 25, 50 and 75 centipoise. In an embodiment shown in **FIG. 12***b*, the viscosity of solution **27** can be sufficient to form a substantial fluidic seal around a protruding electrode **18**.

[**0097**] As shown in **FIGS. 13***a* and **13***b*, in another embodiment porous portion **14***p* can also be configured to deliver a vacuum to between tissue contact surface **14** and tissue surface **5***s*. This can be achieved by coupling portion **14***p* and apparatus **10** to a vacuum source **30***v* known in the medical equipment art. The generation of a vacuum at tissue contact surface **14** via portion **14***p* or other means can provide one or more of the following benefits: (i) rapidly get all or portions of contact surface **14** to conform to the shape of tissue **5***s*, which is particularly beneficial when access to apparatus **10** and tissue surface **14** is limited or obstructed (e.g. when surface **14** is placed on the posterior side or otherwise underneath the liver); and (ii) provide sufficient vacuum to stabilize or even fixedly attached contact surface **14** onto tissue surface **5**s to prevent undesired movement of housing **12** and surface **14** during electrode deployment, respiration, involuntary muscle contraction, or inadvertent jarring during the medical procedure.

[**0098**] Referring to **FIG. 14**, apertures **14***a* in surface **14** can be configured to have a selectable angle, **14***aa* with respect to a longitudinal plane **14***ip* of tissue contact surface **14** such that electrode **18** exist the aperture and enters into tissue at that angle. Angle **14**aa can be in the range of 1 to 180° with specific embodiments of 30, 45, 60, 90, 120 and 135°.

[**0099**] Referring to **FIGS. 15***a*-**15***c*, in various embodiments aperture **14***a* and electrode **18** can have different alignments including but not limited to the following: (i) aperture centerline **14***acl* aligned with the centerline axis **18***acl* of electrode **18**; (ii) aperture centerline axis **14***acl* substantially parallel with the electrode longitudinal axis **18***al;* and (iii) electrode longitudinal axis **18***al* substantially perpendicular to aperture plane **14***ap*.

[**0100**] Referring to **FIG. 15***d*, in various embodiments tissue contact surface **14**, including housing **12**, can include one or more tissue access ports **14***tap* that are distributed in one or more locations in surface **14** which can be the same as or distinct from apertures **14***a*. Access ports **14***tap* can have sufficient diameter to allow access by various surgical instruments including trocars, scalpels, hemostats, biopsy needles and surgical scissors. The diameter **14***dtap* of port **14** tap can range from 0.1 to 1" with specific embodiments of 0.25, 0.5 and 0.75 inches. Also access port **14** tap can be covered with transparent covers. In use, access ports **14** tap are configured to allow the physician access to tissue surface **5***p* and underlying tissue to in order to obtain biopsies, insert surgical instruments, do resections and other surgical procedures. Access ports **14***tap* can also be configured to provide an anchoring function for contact surface **14** and housing **12**. To this end, access ports **14** tap can include or coupled to an anchoring member **14***am* which extends from the access port to a selectable depth in tissue. Anchoring member **14***am* can have a sharpened distal tip **14***amd* that can be a trocar or other needle shape known in the art or described herein. In use, anchoring member **14**am serves to stabilize and anchor housing **12** and tissue contact surface **14** to tissue surface **5***s*. In an embodiment, anchoring member **14***am* can have a helical or corkscrew shape which can be screwed into tissue including fibrous tissue and encapsulated tissue. In a related embodiment, one or more electrodes **18** can also have a helical shape to provide an anchoring function as well.

[**0101**] Turning now to a discussion of advancement member **16**, this component is configured to controllably advance energy electrodes **18** from the interior **12***i* of housing **12** into tissue at the target tissue site. Advancement member **16** can be freely moving within the interior of housing **12** with movement including reciprocal linear motion, axial motion, lateral motions, rotary motion and combinations thereof. Advancement member **16** can also be at least partially positionable in a handpiece **24**(described herein) coupled to housing **12**.

[**0102**] In an embodiment shown in **FIG. 16**, advancement member **16** comprises a disk parallel to proximal or distal end **12***p* or **12***d*, coupled or attached to one or more electrodes **18** that preferably have an longitudinal axis **18***al* perpendicular to the surface plane **16***p* of advancement device **16**. Disk **16** can be configured to move within housing interior **12***i* in a reciprocal fashion with respect to the longitudinal axis **12***al* of housing **12**. The movement can be slidable, rotational or a combination thereof. This is achieved by selecting the outer disk **16***od* to be slightly less than the internal housing diameter **12***id*. The resulting gap **12***g* between the two can be in the range of 0.001 to 0.010 with preferred embodiments of 0.003 and 0.005 inches. Motion between the two can also be facilitate by use of a lubricous coating **12***c* or **16***c* on one or both of the contacting surfaces of housing **12** or disk **16**. Alternatively a sleeve bearing or insert **12***sb* can be placed within the contact

surface of housing interior **12***i*. Sleeve bearing **12***sb* can have shape and materials known in the art.

[**0103**] In an embodiment shown in **FIG. 17**, member **16** which can be disk shaped or another shape, can comprise all or a portion of proximal end **12***p* of housing **12**, thus making proximal end **12***p* movably coupled to housing interior **12***i*. In this and related embodiments, movable proximal end **12***p* can be configured to move or slide reciprocally within in housing **12**.

[**0104**] Referring to **FIG. 18**, electrodes **18** can be positioned in holes **16***h* formed or drilled in disk surface **16***s* and then subsequently adhered in place using adhesive known in the art including but not limited to medical grade including medical grade adhesives such as medical grade epoxies. Also the fit between electrode **18** and hold **16***h* can be an interference fit or within 0.001 to 0.005 of an inch. Hole **16***h* can be a through or a blind hole. Preferably hole **16***h* has a proximal opening **16***hp* to allow a wire **18***h* to be electrically coupled (e.g. by soldering) to each electrode. Wire **18***h* either then is coupled directly to power source **20** or to a cable **20***c* electronically coupled to power source **20**.

[**0105**] In an alternative embodiment shown in **FIG. 19**, electrodes **18** can be coupled to a printed circuit board **17** (using a solder joint or pin coupling), which can be a flex circuit, positioned on the surface **16***s* (proximal or distal) or the interior of disk **16**. Circuit board **17** can include a connector **17***c* such as a tab, pin, blade or mechanical connector known in the art, to connect to electrodes **18**. Also circuit board **17** can include integral multiplexing or switching circuitry **46** as well as impedance and temperature sensors **22**.

[**0106**] Referring to **FIGS. 20***a*-**20***e*, advancement member **16** can be advanced by a number of different mechanical, electromechanical or pneumatic means known in the art that can be coupled or integral to advancement member **16**. In these and related embodiments advancement member **16** can an advancement device **16** or otherwise include an advancement device. In a preferred embodiment shown in **FIG. 20***a*, member **16** is advanced by means of a push rod or stiffened cable **16***c* coupled to member surface **16***s* and a handpiece **24** actuable by an actuator **24**" on handpiece **24** both described herein. In this and other embodiments retraction of member **16** (e.g. proximal movement) can be achieved through the use of one or more springs **16***sprg*, such as coil spring coupled to the proximal or distal surface of member **16** and the proximal or distal surface of housing interior **12***i*. When member **16** is advanced in the proximal direction spring **16***sprg* is stretched such that the spring now exerts a spring force on member **16** in the proximal direction. When the deployment force exerted by the push rod, servo motor, air pressure or other means described herein is removed, the spring force is sufficient to cause member **16** to be withdrawn back to its starting position and withdrawal electrodes **18** from their deployed state in tissue. In various embodiments, the spring force of the one or more springs **16***sprg* can be in the range of 0.1 to 5 lbs with specific embodiments of 0.25, 0.5, 0.75, 1 and 2.5 lbs. Springs **16***sprg* can be made from spring steel known in the art. In one embodiment springs **16***sprgs* are configured to have a selectable amount of spring force achieved through the amount of compression or deflection of the spring.

[**0107**] In an alternative embodiment shown in **FIG. 20***b*, member **16** can be advanced by a motor, servo motor or solenoid **16***m* known in the art positioned on the interior or exterior of housing **12** and mechanical coupled to member **16**. Motor **16***m* can include miniature electric motors including the types used for positioning auto-focus lenses such as those manufactured by RMB Miniature Bearings (Switzerland). Position sensors **22** such as LVDT's can be positioned on member **16** or housing interior **12***i* to provide information on the location of member **16** and amount of deployment of electrodes **18**. In still another embodiment shown in **FIG. 20***c*, member **16** can be advanced by pneumatic means such as a source of compressed air or inert gas **16***g* and the like **16***g* fluidically coupled to housing interior **12***i*. Gas **16***g* can also be used to cool the housing **12** including surface **14**, electrode **18** and tissue surface **5***s*. In a related embodiment, member **16** and housing interior **12***i* are coupled to a vacuum source **16***v* configured to reverse the motion of member **16** and withdrawal coupled electrodes **18**. Vacuum source **16***v* can also be used to provide suction and adherence of contacting surface **14** to tissue surface **14** via the use of one or more suction apertures **14***va* positioned on surface **14**. Apertures **14***va* can be the same as **14***a*. This solves the problem of achieving and maintaining good contact between contact surface **14** and tissue surface **5***s* (before, during and after energy delivery) as well allowing rapid release between the two. Both compressed gas source **16***g* and vacuum **16***v* can be actuable by actuator **24**" which can be or otherwise electronically coupled to a control valve **24***cv* known in the art.

[**0108**] In another embodiment shown in **FIG. 20***d*, advancement member **16** is advanced by inflatable balloon device **16***ib* positioned within housing interior **12***i* and coupled (movably or attached) to member **16**. Inflation of balloon **16***ib* exerts sufficient force against member surface **16***s* (which is opposed by an equal opposite force on housing interior **12***i*) so as to push member **16** in a distal direction and deploy electrodes **18**. Balloon device **16***ib* can be coupled to an inflation/deflation device **16***id* known in the art or to compressed gas source **16***g* and/or vacuum source **16***v*. In an embodiment balloon device **16***ib* can be mechanically coupled, directly attached to or integral with member **16** and housing interior **12***i* such that the inflation/deflation of balloon **16***ib* directly advances and retracts member **16** so as to deploy and retract electrodes **18**.

[**0109**] Balloon device **16***ib* can be a balloon catheter or other medical balloon device known in the art made from balloon materials known in the medical device arts including but not limited to polyester, polyethylene (HDPE including radiated HDPE) latex and other non-compliant and compliant balloon materials. Balloon device **16***ib* can be fabricated using balloon blowing methods known in the art including the use of mold blown balloons.

[**0110**] Referring to **FIG. 20***e*, in an embodiment advancement member **16** can be an advancement device **16** and can comprise a cam **16***cm* known in the art whose motion serves to advance energy delivery device **18** through contact of the cam surface **16***cs* with the proximal end **18***pe* or other portion the energy delivery device. Cam **16***cm* can be mechanically coupled to an actuator **24**" or can coupled to an electric motor **16***m*. Suitable cams include disk cams, translational cams or cylindrical cams configured to operate within housing **12** using rotary, axial or lateral motion and a suitable cam follower **16***cf* which can be coupled to energy delivery device **18** or can be energy delivery device **18** itself.

Suitable cam followers include coiled springs. In another embodiment, the advancement device **16** can be movably or detachably coupled to electrodes **18** including rotational, pivotal and reciprocal couplings. Referring to **FIGS. 21 and 22**, in an embodiment shown in **FIG. 21** advancement member **16** comprises one or more individual pushable advancement members **19** each coupled to or including an individual electrode **18** that is aligned with a corresponding apertures **14***a* so as to exit from aperture **14***a*. Pushable advancement members **19** can in turn, be configured to be mechanically advanced by means of an advancement tool **21** that is configured to be inserted through a proximal aperture **12***pa* that is aligned with advancement member longitudinal axis **19***al*.

[**0111**] Pushable member **19** has proximal portion **19***p* and an elongated portion **19***e* including a distal portion **19***d*. Proximal portion **19***p* can have an inward convex curve **19***c* or indentation **19***i* to facilitate force application and advancement by pushing tool **21**. Similarly the advancements tool **21** can have a recessed or convex curved contour **21***cc* at its proximal portion to facilitate finger manipulation. At least a portion of distal portion **19***d* comprise electrode **18**. The proximal portion can have a significantly larger diameter **19***dp* relative to distal portion diameter **19***dd* rendering proximal portion stiffer than distal portion. The ratio of diameters of proximal to distal portion can be in the range of 1:2 to 1:10, with corresponding ratios of column strength or stiffness. Proximal portion **19***p* has sufficient diameter and column strength to advance the entire length of electrode **18** into various tissue include hard fibrous tissue such. Proximal portion **19***p* can have a diameter in the range of 0.1 to 0.5 inches with specific embodiment of 0.2, 0.3 and 0.4 inches. The proximal portion **19***p* can be made of a conductive high strength metal such as 304 or 304V stainless steel or hardened tool steel. Proximal portion **19***p* and distal portion **19***d* can be an integral component or can be joined using metal working methods known in the art including soldering, brazing and welding. Advancement member **19** can be configured to be retracted by means of a spring such as a coiled spring **19***g* that can be positioned over distal portion **19***p* or otherwise coupled to advancement member **19**. Spring **19***g* has diameter **19***gd* configured to fit over distal portion **19***d*/electrode **18**, but be contained or but up against the larger diameter of proximal portion **19***p*. A releasable locking or clamp device **19***cd* can be coupled to spring **19***g* and advancement member to be able lock advancement member **19** and electrode position deployed. Clamp **19***cd* can also serve as a electrical/switch to electrically couple electrode **18**/member **19** to a power source when member **19** is in a deployed position.

[**0112**] Advancement tool **21** has a proximal portion **21***p* and elongated portion **21***e*, including a distal portion **21***d*. Proximal portion can have a cylindrical shape configured to held and pushed with finger including a recessed proximal contour **21***cp*. Also all, or portions of tool **21**, including a proximal portion **21***p*, can be include an electrically insulative layer **21***c* to electrically isolate tool **21** from member **19**. Elongated portion **21***e* can be a solid cylindrical shaft configured to be inserted through proximal aperture **12***pa* and make contact with and advance advancement member **19**. Proximal portion **21***p* can be configured to remain outside of the housing **12** (by virtue of it having a larger diameter than proximal aperture **12***a*), such that the length **21***e* of elongated portion **21***e* controls the penetration depth **18***pd* of electrode **18**. Accordingly, the length **21***el* of elongated portion **21***e* can be in the range of 0.1 to 5 cm with specific embodiment of 0.5, 1.0, 1.5, 2.0, 2.5, 3.0 and 4.0 cms. All or portions of tool **21** can be made from rigid injection moldable polymers such as polycarbonate or ABS or machined tool steel known in the art. In an embodiment, tool **21** can be thumbtack shaped with a plastic proximal portion **21***p* and an embedded elongated portion **21***e*.

[**0113**] Referring to **FIG. 22**, in a method of the invention the physician can use one or more advancement members **19** having different elongated section lengths **19***e* to deploy one or more selected electrodes of electrode array **18***a* to selectable depths to produce a volumetric pattern **5***p* or profile of deployed electrode **18** to correlate to a tumor mass **5**" and avoid nearby critical structures so as to produce a selectable ablation volume **5***av*. The physician could use locking device **19***cd* to lock each electrode in place during energy delivery and subsequently release one or more selected electrode and then re-deploy those electrodes to a different depth for a second delivery of energy to produce a continuous ablation volume or two or more distinct ablation volumes.

[**0114**] Turning now to a discussion of electrodes and electrode configurations, in various embodiments electrodes **18** can have a variety of shapes and geometries. Referring to **FIGS. 23***a*-**23***f*, example shapes and geometries can include, but are not limited to, ring-like, ball, hemispherical, cylindrical, conical, needle-like and combinations thereof. Referring to **FIG. 24**, in an embodiment electrode **18** can be a needle with sufficient sharpness to penetrate tissue including fibrous tissue including, encapsulated tumors cartilage and bone. The distal end **18***de* of electrode **18** can have a cut angle **68** that ranges from 1 to 60°, with preferred ranges of at least25° or, at least 30° and specific embodiment of 25° and 30°. The surface of electrode **18** can be smooth or textured and concave or convex. The conductive surface area **18**s of electrode **18** can range from 0.05 mm2 to 100 cm2. Referring to **FIG. 25**, electrode **18** can also be configured to be flexible and or deflectable having one or more radii of curvature **70** which can exceed 180° of curvature. In use, electrode **18** can be positioned to heat, necrose or ablate any selected target tissue volume **5**'. A radiopaque marker **11** can be coated on electrodes **18** for visualization purposes.

[**0115**] Electrode **18** can be made of a variety of conductive materials, both metallic and non-metallic. Suitable materials for electrode **18** include, steel such as 304 stainless steel of hypodermic quality, platinum, gold, silver and alloys and combinations thereof. Also, electrode **18** can be made of conductive solid or hollow straight wires of various shapes such as round, flat, triangular, rectangular, hexagonal, elliptical and the like. In a specific embodiment all or portions of electrodes **18** and **18**' can be made of a shaped memory metal, such as NiTi, commercially available from Raychem Corporation, Menlo Park, Calif.

[**0116**] Electrode **18** can be coupled to housing **12**, contacting surface **14** or advancement member **16** using soldering, brazing, welding, crimping, adhesive bonding and other joining methods known in the medical device arts. Also, electrode **18** can include one or more coupled sensors **22** to measure temperature and impedance (both of the electrode and surrounding tissue), voltage and current other physical properties of the electrode and adjacent tissue. Sensors **22** can be at exterior surfaces of electrodes **18** at their distal ends or intermediate sections.

[0117] Referring now to **FIGS. 26 through 29** in various embodiments one or more electrode **18** can be covered by an insulative layer **18***il* so as to have an exterior surface that is wholly or partially insulated and provide a non-insulated area which is an energy delivery surface **18***eds*. In an embodiment shown in **FIG. 26**, insulative layer **18***il* can comprise a sleeve that can be fixed or slidably positioned along the length of electrode **18** to vary and control the length of energy delivery surface **18***eds*. Suitable material for insulative layer **18***il* include polyimide and flouro-carbon polymer such as TEFLON.

[0118] In the embodiment shown in **FIG. 27**, insulation **18***il* is formed at the exterior of electrodes **18** in circumferential patterns, leaving a plurality of energy delivery surfaces **18***eds*. In an embodiment shown in **FIGS. 28 and 29**, insulation **18***il* extends along a longitudinal exterior surface of electrodes **18**. Insulation **18***il* can extend along a selected distance along a longitudinal length of electrodes **18** and around a selectable portion of a circumference of electrodes **18**. In various embodiments, sections of electrodes **18** can have insulation **18***il* along selected longitudinal lengths of electrodes **18** as well as completely surround one or more circumferential sections of electrodes **18**. Insulation **18***il* positioned at the exterior of electrodes **18** can be varied to define any desired shape, size and geometry of energy delivery surface **18***eds*. As described herein, insulation layer **18***il* can also be applied to contact surface **14***l* including conductive portion **14***con* in a similar variety of sizes and geometries.

[0119] Referring now to **FIGS. 30***a* and **30***b*, electrode **18** can include one or more lumens **72** (which can be contiguous with or the same as lumen **13**) coupled to a plurality of fluid distribution ports **23** (which can be apertures **23**) from which a variety of fluids **27** can be introduced, including conductivity enhancing fluids, electrolytic solutions, saline solutions, cooling fluids, cryogenic fluids, gases, chemotherapeutic agents, medicaments, gene therapy agents, photo-therapeutic agents, contrast agents, infusion media and combinations thereof. This is accomplished by having ports or apertures **23** that are fluidically coupled to one or more lumens **72** coupled to lumens **13** in turn coupled to fluid reservoir **30** and/or fluid delivery device **28**.

[0120] In an embodiment shown in **FIG. 30***a*, a conductivity enhancing solution **27** can be infused into target tissue site **5'** including tissue mass **5"**. The conductivity enhancing solution can be infused before during or after the delivery of energy to the tissue site by the energy delivery device. The infusion of a conductivity enhancing solution **27** into the target tissue **5'** creates an infused tissue area **5***i* that has an increased electrical conductivity (verses un-infused tissue) so as to act as an enhanced electrode **40**. During RF energy delivery, the current densities in enhanced electrode **40** are greatly lowered allowing the delivery of greater amounts of RF power into electrode **40** and target tissue **5'** without impedance failures. In use, the infusion of the target tissue site with conductivity enhancing solution provides two important benefits: (i) faster ablation times; and (ii) the creation of larger lesions; both without impedance-related shut downs of the RF power supply. This is due to the fact that the conductivity enhancing solution reduces current densities and prevents desiccation of tissue adjacent the electrode that would otherwise result in increases in tissue impedance. A preferred example of a conductivity enhancing solution is a hypertonic saline solution. Other examples include halide salt solutions, and colloidal-ferro solutions and colloidal-silver solutions. The conductivity of enhanced electrode **40** can be increased by control of the rate and amount of infusion and the use of solutions with greater concentrations of electrolytes (e.g. saline) and hence greater conductivity. In various embodiments, the use of conductivity enhancing solution **27** allows the delivery of up to 2000 watts of power into the tissue site impedance shut down, with specific embodiments of 50, 100, 150, 250, 500, 1000 and 1500 watts achieved by varying the flow, amount and concentration of infusion solution **27**. The infusion of solution **27** can be continuous, pulsed or combinations thereof and can be controlled by a feedback control system described herein. In a specific embodiment, a bolus of infusion solution **27** is delivered prior to energy delivery followed by a continuous delivery initiated before or during energy delivery with energy delivery device **18** or other means.

[0121] In alternative embodiment, conductivity enhancing fluid **27** is injected by electrically non conductive needles or infusion members **18***nci* (which include lumens **72** and apertures **23**) coupled to advancement member **16** and/or housing **12**. Members **18***nci* can be coupled to a fluid delivery device **12***fdd* positionable within housing **12**. Fluid **27** in members **18***nci* is electrically coupled to an RF or other power source **20** via a conductor or electrode **18**c that is positioned within lumens **72** and **13** and electrically coupled to power source **20**. Members **18***nci* are configured to infuse a fluid **27** into target tissue **5'** to define a tissue infusion tissue volume **5***i*. Electrically non-conductive infusion member **18***nci* can be fabricated from a variety of polymers known in the art including thermoset and rigid polymers such as ABS, acrylic and polycarbonate. Alternatively member **18***nci* can be fabricated from insulated metal using insulation materials described herein.

[0122] In various embodiments, the conductivity of the tumor mass **5'** can be enhanced so as to preferentially increase the rate and total amount of energy delivery of energy to the tumor mass **5'** relative to healthy tissue. This can be achieved by infusing conductivity enhancing solution **27** directly into the tumor mass **5'** through the use of a needle electrode **18** place within the tumor mass only. In related embodiments solution **27** can be configured to remain or be preferentially absorbed or otherwise taken up by tumor mass **5"**. This can be achieved by controlling by one or more of the osmolality, viscosity and concentration of solution **27**.

[0123] As shown in **FIG. 30***b* apertures **23** can be also configured to provide cooling of electrodes **18** and surrounding tissue to prevent tissue desiccation and the deposition of charred tissue on the surface of electrode **18** and in turn, prevent the subsequent development of excessive impedance at or near electrode **18**. The cooling is accomplished by both the use of a cooled solution to cool the electrodes by a combination of convection and conduction. The amount of cooling can be controlled by control of one or more of the following parameters: (i) temperature of the cooling solution; (ii) flow rates of the cooling solution; (iii) heat capacity (e.g. specific heat) of the cooling solution; and (iv) combinations thereof. Examples of cooling solutions include, water, saline solution and ethanol and combinations thereof. Other embodiments can utilize a cooling fluid or gas **27***g* that serves to cool electrodes **18** by ebullient cooling or Joule-

Thomson Effect cooling as well as the mechanisms described above. Embodiments utilizing Joule-Thomson Effect cooling can have a nozzle-shaped aperture **23***n* to provide for expansion of a cooling fluid **27***g*. Suitable cooling fluids **27***g* can include, but are not limited to, chilled water, freon, liquid CO_2, liquid nitrogen and other cryogenic gases.

[**0124**] Turning now to a discussion of power supplies and power delivery, when power supply **20** is a RF source it produces RF energy delivered to tissue through RF electrode **18**. RF energy flowing through tissue causes heating of the tissue due to absorption of the RF energy by the tissue and ohmic heating due to electrical resistance of the tissue. The heating causes tissue temperature to rise sufficiently to cause cell injury and death particularly for temperatures in excess of 50-55° C. Increased amounts of power will resultant in higher temperature and greater magnitude of cell death it is desirable to be able to deliver a range of RF power levels depending upon a variety of parameters include but not limited to tumor size, tissue type, tumor location and amount of tumor vascularization. Accordingly in varying embodiments, RF power supply **20** can be figured to deliver between 5 to 200 watts, preferably 5 to 100, and still more preferably 5 to 50 watts of electromagnetic energy is to the electrodes of energy delivery device **18** without impeding out. This can be accomplished through the use of cooling solutions and methods described herein as well as the use of power duty cycles to allow for a certain amount of thermal dissipation in and around electrodes **18**

[**0125**] Electrodes **18** are electromagnetically coupled to energy source **20**. The coupling can be direct from energy source **20** to each electrode **18** respectively, or indirect by using a collet, sleeve, connector, lemo connectors, cable, wire and the like which couples one or more electrodes to energy source **20**. Energy can also be beamed or transmitted to electrodes **18** using RF transmission or diathermy methods known in the art. Delivered energies can be in the range of 1 to 100,000 joules, more preferably in the range 100 to 50000 joules, still more preferably in the range of 100 to 5000 and still yet more preferably in the range 100 to 1000 joules. Lower amounts of energy can be delivered for the ablation of smaller structures such as nerves and small tumors with higher amounts of energy for larger tumors. Also delivered energies can be modified (by virtue of the signal modulation and frequency) to ablate or coagulate blood vessels vascularizing the tumor. This provides the benefit of providing a higher degree of assurance of coagulating the blood supply of and to the tumor.

[**0126**] Turning to a discussion of sensors, sensor **22** can be selected to measure temperature, impedance, pressure or other tissue property described herein to permit real time monitoring, imaging and control of energy delivery or fluid delivery described herein. The use of one or more sensors **22** coupled to the housing **12**, energy delivery surface **14**, energy delivery devices **18** or handpiece **24** permits accurate measurement of temperature at tissue site **5'** in order to determine the following: (i) the extent of cell necrosis; (ii) the amount of cell necrosis; (iii) whether or not further cell necrosis is needed; and (iv) the boundary or periphery of the ablated tissue mass. Further, the use sensor **22** reduces non-targeted tissue from being injured, destroyed or ablated.

[**0127**] Referring to back **FIG. 2**, one or more sensors **22** can be positioned at the exterior surfaces of electrodes **18**, at their distal ends **18***de,* or intermediate sections. This allows monitoring of temperature, impedance or other tissue property at various points within and outside of the interior of tissue site **5'**, such that a determination of one or more of the following can be made: (i) the periphery of the selected tissue/tumor mass; (ii) the periphery of the developing ablation volume **5***av;* and (iii) a determination of when cell necrosis is complete. If at any time, sensor **22** determines that a desired cell necrosis temperature is exceeded, then an appropriate feedback signal is received at power source **20** coupled to energy delivery device **18** which then regulates the amount of electromagnetic energy delivered to electrodes **18**. This reduces damage to healthy tissue surrounding the targeted mass to be ablated. Sensors **22** can be coupled to a multiplexer or other switching device (described herein) so as to integrate the signal from one or more sensors **22** to obtain a composite picture of the sensed property for all or selected portions of the tumor surface area **5***b*.

[**0128**] Sensor **22** can be of conventional design, including but not limited to thermal sensors, acoustical sensors, optical sensors, pH sensors, gas sensors, flow sensors positional sensors and pressure/force sensors. Thermal sensors can include thermistors, thermocouples, resistive wires, optical sensors and the like. A suitable thermal sensor **22** includes a T type thermocouple with copper constantene, J type, E type, K type, fiber optics, resistive wires, thermocouple IR detectors, and the like. Acoustical sensors can include ultrasound sensors including piezoelectric sensors which can be configured in an array. Pressure and force sensors can include strain gauge sensors including silicon-based strain gauges contained in a miniaturized silicon chip including an ASIC. Optical sensors can include photo-multipliers and micro-machined optical fibers. Gas sensors can include **02** sensors such as Clark electrodes, CO_2 sensors and other electrochemical based sensors known in the art. Flow/velocity sensors can include ultrasound sensors, electromagnetic sensors and aneometric sensors which can be configured to detect both liquid and gaseous velocities and flow rates. Positional sensors can include LVDT's, and Hall effect sensors. Other sensors which can be employed include impedance sensors, antibody-based sensors, biosensors (e.g. glucose) and chemical sensors. In various embodiments, one sensor can be configured to detect multiple parameters or one or more sensors can be coupled together or arrayed so as to provide composite information of a tissue site **5'**. Pressure sensors can be selected and/or configured to detect pressure differentials less than 1 mmHg and even less than 0.1 mmHg. In specific embodiments, pressure sensor **22** can be a micro- machined fiber optic sensor, a PSP-1 pressure sensor manufactured by Gaymar Industries Inc., (Orchard Park, N.Y.) or a Monolithic Integrated Pressure sensor made by the Fraunhofer-Institut (Duisburg, Germany). Suitable ultrasound sensors or transducers can include a Model 21362 imaging probe manufactured by the Hewlett Packard Company, Palo Alto, Calif.

[**0129**] In other embodiments, at least a portion of sensors **22** can be pressure or force sensors positioned on or in housing **12** including tissue contact surface **14** so as to be able to measure the force applied by surface **14** onto tissue surface **5***s* and into target tissue site **5'** tissue tumor mass **5"**. Additionally, pressure/force sensors can provide an indication of the size of the ablation volume and/or the degree of thermal injury due to the tissue shrinkage that occurs with

the thermal contraction and denaturization of collagen comprising tumor mass **5**" as well as the shrinkage/coagulation of the vasculature within the tissue mass. Thus, a decreased pressure on surface **5***s* can be indication of the size of an ablation volume and/or the completeness of ablation of a tumor mass. Also in increase in pressure could provide an indication as well due to the development of steam and other gas pressure beneath tissue surface **5***s*. Measurement of pressure changes occurring during RF or other thermal ablation treatment described herein can be combined with temperature measurements to provide a more robust indication of complete tumor ablation and hence clinical endpoint. In one embodiment algorithm for determining an endpoint for ablation can include a polynomial equation and/or multivariant analysis using both measure tissue temperature and tissue pressure as input parameters.

[**0130**] Pressure or force sensors **22** can be strain gauges, silicon based pressure sensors, accelerometers, semiconductor gauge sensors, silicon strain gauges, heat resistant silicon strain gauges, micro-machined pressure sensors and the like. In an embodiment pressure sensor **22** can be a flexible silicon strain gauge manufactured by the BF Goodrich Advanced Micro Machines (Burnsville, Minn.).

[**0131**] Referring now to FIGS. **31-35**, in various embodiments, housing **12** can include or be coupled to a graspable handle or handpiece **24**. As shown in **FIG. 31**, handpiece **24** can include a grip portion **24***g* and elongated portion **24***e*. Elongated portion **24***e* can be attached at an angel **24***a* with respect to the longitudinal axis **12***al* of housing **12**. Angle **24***a* can range from 0 to 360° with specific embodiments of 15, 30, 45, 60, 90, 120 and 180°. Also, all or portions of handpiece **24** can be integral to housing **12**.

[**0132**] The grip portion **24***g* can have a variety of shapes and grips including, but not limited to, a screw driver grip, pistol grip and other grips known in the art. In various embodiments, elongated portion **24***e* can be a wire-reinforced or metal-braided polymer shaft, a catheter, a multilumen catheter, port device (such as those made by the Heartport® Corp., Redwood City, Calif.), subcutaneous port or other medical introducing device known to those skilled in the art. In a specific embodiment, elongated portion **24***e* is a trocar or a safety trocar and the like. Also as described herein, elongated portion **24***e* can be adapted to be coupled to or used in conjunction with various viewing devices including, endoscopes, optical fibers, video imaging devices and the like. Elongated portion **24***e* can be constructed of a variety of metal grade metals known in the art including stainless steel such as 304 or 304V stainless steel as well shape memory metal such as Nitinol. Elongated portion **24***e* can also be constructed from rigid polymers such as polycarbonate or ABS or resilient polymers including Pebax®, polyurethane, silicones HDPE, LDPE, polyesters and combinations thereof.

[**0133**] In various embodiments, handpiece **24** can include ports **24**' and actuators **24**" shown in **FIG. 32***a*. Ports **24**' can be coupled to one or more lumens **13** and can include fluid and gas ports/connectors and electrical, optical connectors. In various embodiments, ports **24**' can be configured for aspiration/vacuum (including the aspiration of tissue), and the delivery of cooling, conductivity enhancing, electrolytic, irrigation, polymer and other fluids (both liquid and gas) described herein. Ports **24**' can include but are not limited to luer fittings, valves (one-way, two-way), toughy-bourst connectors, swage fittings and other adaptors and medical fittings known in the art. Ports **24**' can also include lemo-connectors, computer connectors (serial, parallel, DIN, etc.) micro connectors and other electrical varieties well known to those skilled in the art. Further, ports **24**' can include opto-electronic connections which allow optical and electronic coupling of optical fibers and/or viewing scopes (such as an endoscope) to illuminating sources, eye pieces, video monitors and the like.

[**0134**] Actuators **24**" can include rocker switches, pivot bars, buttons, knobs, ratchets, cams, rack and pinion mechanisms, levers, slides and other mechanical actuators known in the art, all or portion of which can be indexed. These actuators can be configured to be mechanically, electromechanically, or optically coupled to pull wires, deflection mechanisms and the like allowing selective control and steering of introducer **12**. Also actuators **24**" can be configured such that longitudinal movement of actuators **24**" is translated to a combination of lateral or longitudinal movement of electrodes **18**, contact surface **14**, or forceps **24***p*.

[**0135**] In an embodiment shown in **FIG. 32***b*, actuators **24**" can include a positioning fixture **24**"*p* to control the penetration depth of electrodes **18**. Positioning fixture **24**"*p* can include a rotatable positioning fixture, an indexed positioning fixture or a micro positioning fixture all known in the art. Also the handpiece can include an electrode deployment template **24***et* with individual deployment actuators **24***da* for each electrode that enables or disables deployment of individual electrode mechanically coupled to the electrode template.

[**0136**] As shown in **FIG. 32***a,* hand piece **24** can also be configured to be coupled to tissue aspiration/collection devices **26**, fluid delivery devices **28** (e.g. infusion pumps) fluid reservoirs (cooling, electrolytic, irrigation etc.) **30** or power source **20** through the use of ports **24**'. Tissue aspiration/collection devices **26** can include syringes, vacuum sources coupled to a filter or collection chamber/bag. Fluid delivery device **28** can include medical infusion pumps, Harvard pumps, peristaltic pumps, syringes and the like.

[**0137**] In an embodiment shown in **FIG. 33** elongated portion **24***e* can include a curved portion **24***c* positioned at the proximal or distal sections **24***ep* and **24***ed* of elongate portion **24***e*. Curved portion **24***c* can have a preselected amount or arc of curvature **24***arc* ranging from 1 to 270° with specific embodiments of 30, 60, 90, 120 and 180. In various embodiments, the length, shape and amount of curvature of handpiece **24** including curved portion **24***c* are configured to allow the physician to position the housing **12** including tissue contacting surface **14** on the side (lateral) or back (posterior) surface of a target tissue site such as the liver using an anterior or other approach. Curved portion **24***c* can include a curvilinear, hyperbolic, parabolic or shaped curve or combinations thereof.

[**0138**] In an embodiment shown in **FIG. 34**, handpiece **24** including elongated portion **24***e* can include a bendable or deflectable portion **24***b*which is configured to allow portions of handpiece **24** bend a selectable amount to allow the physician to position housing **12** on a selected surface of a target organ **5** including the posterior and lateral surfaces of the organ. In various embodiments, bendable portion **24***b* can comprise an articulated section using corrugated poly-

mers known in the art or a section made from flexible or resilient materials including elastomers such as silicone or polyurethane, a coiled spring, a bendable wire, or a wire reinforced catheter. In a preferred embodiment, bendable portion **24***b* comprises a braided resilient polymer tube known in the art. Bendable portion **24***b* can be deflected using a number of deflection mechanisms known in the art including pull wires **15** and the like. Alternatively for embodiments having an articulated bendable portions **24***b*, the articulations can have sufficient rigidity (e.g. bending force) to maintain its shape once the physician has bent it into a desire position. This can be achieved through the use of metallic or steel articulated sections **24***b* having bending force ranging from 0.5 to 10 lbs with specific embodiments of 1, 2.5 and 5 lbs of force.

[**0139**] In other embodiments, handpiece **24** can be configured to not only position housing **12** adjacent the desired target tissue site but also to shape or otherwise manipulate tissue contact surface **14** so as to at least partially conform contact surface **14** and/or housing **12** to the contour of the target tissue surface. This can be accomplished through a variety of mechanical means known in the surgical instrument arts. In an embodiment shown **FIG. 35**, this can be accomplished by a pull wire **15** (contained within elongated section **24***e*) attached in two or more places to a bendable tissue contact surface **14** and also to handpiece **24** so as to be controlled by actuators **24**". In related embodiment, it can be accomplished through the use of a forceps device **24***f* attached to tissue surface **14** and mechanically coupled to handpiece **24** (including actuator **24**") by a connecting rod **15***cr* or pull wire **15**. Actuator **24**", connecting rod **15***cr* or pull wire **15** can be so configured such that a longitudinal movement of actuator **24** (with respect to axis **12***al*) is translated into lateral or curved movement of surface **14** relative a plane **14***p* of surface **14**. Forcep device **24***f* can include forceps, curved forceps, hemostats or any hinged or grasping device known in the surgical or mechanical arts

[**0140**] The use of forcep device **24***f* allows the physician to not only shape the contact surface **14** to the tissue surface but also to apply a selectable amount of pressure to the tissue surface to do one or more of the following: (i) stabilize the housing on the tissue surface; (ii) at least partially immobilize the target tissue site; and (iii) at least partially stop the flow of blood to the target tissue through the application of direct pressure including onto a selected vessel or vascularture.

[**0141**] In use, coupled forcep device **24***f*, provides the benefit of improving the contact of surface **14** to the tissue surface so as provide a more precise delivery of energy to the target tissue site and prevent damage to surrounding healthy structure. It also improves the ease and accuracy of the positioning and deployment of needles **18**. Further, embodiments of the invention with coupled forcep device **24***f* reduce the amount of manipulation of the liver or other target organ to position housing **12** and needles **18** thus making associated ablation procedure less invasive and less traumatic reducing the likelihood of morbidity and mortality as well as reducing procedure time. This and related embodiments can be configured for endoscopic applications.

[**0142**] In use, a movable or bendable handpiece **24** and introducer solves the problem of allowing the physician to atraumatically access difficult to reach portions of the liver including the posterior portion and lateral portions that are butting up against adjacent organs and structures. More importantly, the handpiece allows the physician to reach such locations without having to appreciably move or distend diseased (e.g. cirrhosed) or damaged portions of the liver that are subject to injury including hemorrhage from such movement. In use embodiments having a bendable handpiece serve to reduce the likelihood of injury during the positioning of the device to the desired target tissue surface **5***s*. Coating of the exterior of one or more of the handpiece, introducer and housing with a lubricous coating known in the art also serves to make the positioning of the housing, less atraumatic, faster and easier. Such coatings can include TEFLON and can be in the range of 0.0001 to 0.0003" in thickness.

[**0143**] Turning to a discussion of electrode deployment, in various embodiments electrodes **18** can be controllably deployed from housing **12**. Referring to **FIGS. 36***a*-**36***b*, electrodes **18** can have a non-deployed state in which they are contained within housing **12** and deployed state in which at least a portion of the electrode is advanced out of the housing and into tissue. For embodiments having curved electrodes, electrodes **18** are pre-sprung or otherwise given memory using metallurgical methods known in the art (such as mandrel shaping) such that their deployed state electrodes **18** assume a curved shape having at least one radius of curvature **18***r*. Further, the electrode **18** can be configured to assume a greater amount of curvature or otherwise be deflected or in response to a force exerted by tissue including tumor mass **5**" such that electrode **18** has a changing direction of travel in tissue as the electrode is advanced into tissue. In various embodiments, this can be achieved through the selection of the material properties of the electrode including but not limited to elastic modulus, % elongation, yield strength, column strength, diameter, bending modulus, spring constant, degree of tapering and the like.

[**0144**] In a preferred embodiment, in their non deployed state electrodes **18** are completely contained or recessed within housing **12**, particular tissue penetrating distal end **18***de* in the non deployed state and then subsequently during electrode retraction. This configuration provides the benefit of a safety feature to prevent accidental stick injury to medical personnel and the patient. This is achieved by having electrode length **18***l* be less than housing length **12***l*. In its fully deployed state, electrode **18** has a deployed portion **18***dp* protruding distally out of housing **12** and into tissue and a non-deployed portion **18***ndp* that is contained in housing **12**. In various embodiments, electrode **18** has a deployed length **18***dl* in the range of 0.25 to 20 cm with specific embodiments of 1.5 cm, 2.5, 4, 5 and 10 cms in order to achieve a penetration depth **18**pd roughly corresponding to these amounts. In an embodiment, the non-deployed length can be in the range of 0.25 to 3 cms. At the same time, the housing **12** has sufficient length to allow complete withdrawal of electrodes **18** into the housing to prevent accidental stick injury both to the patient and medical personnel during positioning and manipulation of the housing and apparatus. Thus in various embodiments, the length of housing **12** can range of 0.5 cms to 9 cms with specific embodiments of 2.5, 5.0 and 7.5 cms. The actual lengths of electrode **18** depends on the location of tissue site **5**' to be ablated, its distance from the site, its accessibility as

well as whether or not the physician chooses a open surgical procedure or a percutaneous, or other minimally invasive procedure.

[0145] By varying the depth of penetration, the pattern and number of deployed electrodes, electrodes **18** can be selectably deployable from housing **12** to create any desired geometric volume of cell necrosis. Accordingly, electrodes **18** can be configured to create a variety of different geometric ablation volumes or cell necrosis zones including but not limited to spherical, semi-spherical, spheroid, triangular, semi-triangular, square, semi-square, rectangular, semi-rectangular, conical, semi-conical, quadrilateral, semi-quadrilateral, semi-quadrilateral, rhomboidal, semi-rhomboidal, trapezoidal, semi-trapezoidal, combinations of the preceding, geometries with non-planar sections or sides, free-form and the like.

[0146] Referring to **FIG. 37** in an embodiment, electrodes **18** can comprise an array **18***a* of deployable electrodes positioned in housing **12**. Electrode array **18***a* can include a first, second and third electrode **18**, **18**" and **18**'" with other embodiments including 5, 7, 10, 15 and 20 electrodes. Electrodes **18**', **18**" and **18**'" can have tissue piercing distal ends **18***de*'**18***de*", and **18***de*'" respectively. Electrodes **18**', **18**" and **18**'" are selectably deployed with in straight fashion or with curvature from apertures **14***a* of tissue contact surface **14** to a selected tissue site **5**'. Tissue site **5**' can be any tissue mass and can be a tumor to be ablated. Electrodes **18**', **18**" and **18**'" are selectably deployed to be controllably positioned at a desired location relative to tissue site **5**' that includes internal placement, external placement at a periphery of tissue site **5**' and at any desired location relative to tissue site **5**'. The selectable deployment of electrodes **18**'**18**", and **18**'" to create a desired pattern of ablation or ablation volume **5**v can be achieved controlling one or more of the following parameters: (i) the amount of advancement of electrodes **18**'**18**", and **18**'" from housing **12**; (ii) the independent advancement of electrodes **18**'**18**", and **18**'" from housing **12**; (iii) the lengths and/or sizes of energy delivery surfaces of electrodes **18**', **18**" and **18**'"; (iv) the variation in material properties (e.g. stiffness and column strength) used for electrodes **18**'**18**", and **18**'"; and (v) variation of geometric configuration of electrodes **18**'**18**", and **18**'" in their deployed states. Also, electrodes **18** can be deployed simultaneously, in pairs, in sets and one at a time. Further, in various embodiments any number of electrodes **18** can be coupled to housing **12** for deployment.

[0147] In an embodiment electrodes **18**' and **18**" can have a radius of curvature **18***r* in their deployed stated, while electrode **18**'" remains substantially straight or has less curvature than electrodes **18**' and **18**'. As all three (or more) electrodes are advanced into tissue the shape of their perimeter **18***per* or the perimeter **5***avp* of ablation volume **5***av* stays substantially the same (though it increases in size) independent of the amount of longitudinal deployment of electrodes **18**'**18**", and **18**'" relative to housing longitudinal axis **12**al. This scalability of ablation volume shape is also shown in U.S. application Ser. No. 09/148,571, Filed Sep. 4, 1998 which is incorporated by reference herein.

[0148] Referring to **FIGS. 38***a* and **38***b,* in an embodiment of the apparatus electrode **18***a* can be configured as a substantially rectangular array **18***ar* having four or more electrodes **18**. Housing **12** can also have a substantially rectangular shape. The rectangular array **18***ar* can comprise one or more rows of electrodes **18***rw* closely spaced, enabling the physician to create a narrow rectangular and precise ablation volume. Such spacing **18***lr* of electrodes rows can be in the range of 1 to 30 mms with specific embodiments of 10 and 20 mm. In use, embodiments of a rectangular array **18***a* would allow the physician to create a series of sectional ablation volumes which could be individually resected and/or biopsied.

[0149] The tissue penetration depth of electrodes **18** can be controlled by a variety of means discussed herein including the use of a positioning fixture on the handpiece. Referring now to FIGS. **39**-**40**, in various embodiments penetration depth **18***pd* can be controlled by a stop **33** positioned on or in housing **12**. Stop **33** can be a mechanical stop configured to limit a longitudinal or other movement of electrode **18**. Stop **33** can positioned in or on the proximal or distal portion **12***p* and **12***d* of housing **12**. Further, stop **33** can be movably or fixedly coupled to housing **12** and can be integral to housing **12**. In an embodiment shown in **FIG. 39**, stop **33** is a tubular sleeve of a set length **33***l* that is configured to be coupled aperture **14***a* and has inner diameter **33***d* configured to allow the advancement of electrode elongated section **18***es* but stop or but up against proximal portion **18***pp*. The length **33***l* of stop sleeve **33** determines or limits electrode penetration depth **18***pd*. In an alternative embodiment, stop **33** can be a latch or clamp that protrudes from the housing wall **12***w* to make contact with proximal portion **18***pp* of electrode **18** having a larger diameter than distal the electrode section **18***ds*.

[0150] In related embodiment shown in **FIG. 40**, stop sleeve **33** is configured to be movably adjustable (and hence penetration depth **18***pd* as well) by being coupled to a lateral positioning arm member **33***pam* that is configured to be slidably movable within a longitudinal slot **12***slt* in housing **12**. Positioning arm member **12***pam* can be fixed in particular longitudinal position within the slot using a locking mechanism/member **33***lm* such as a locking nut ,clamp or squeezable member. The exterior of slot **12***slt* can have depth/positional markings **12***dm* that are pointed to by arm member **33** pam as the arm and coupled stop **33** are moved up and down in order to indicate the selected penetration depth **18***pd* to the user.

[0151] In related embodiments penetration depth **18***pd* as well electrode position can also be ascertained through the use of one or more sensors **22** positioned on electrode **18**, housing **12** or advancement member **16** on the proximal or distal portions of each. Suitable positional sensors that can be employed include LVDTS and positional sensors known in the art. Such sensors **22** could also be configured to determine, full electrode deployment, partial deployment and full electrode retraction with such conditions being indicated by a audio or visual signal on the display of a coupled power supply **20** or computer/control system **338**/**329** described herein. A hall effect switch or other switch sensor **22**, could be used to determine full deployment and full retraction. This and related embodiments provides the benefit to the user of being able to reliably ascertain full deployment of the electrodes in tissue site **5**' without having to resort to an imaging device such as fluoroscopy which in turn reduces procedure time and exposure to ionizing radiation. Further, the embodiment of also provides the safety benefit of indicating to the user when the electrodes are full

retracted enabling apparatus **10** or housing **12** to be easily removed from the tissue surface without the risk of puncture injury to the patient or associated medical personnel.

[**0152**] Turning now to a discussion of the control of energy delivery by electrodes **18**, in various embodiments such control can be achieved via the multiplexing of one or more electrodes **18**. Referring to **FIG. 41**, in an embodiment one or more wires **18**h may be coupled to a multiplexing device **46** or other switching device known **46** in the art coupled to power supply **20**, allowing energy to be delivered to selected electrodes to achieve a desired spatial pattern of active electrodes or temporal pattern of or a combination of both. Spatial patterns can include circular, semicircular, oval, crescent, rectangular and triangular. Temporal patterns can include pulsation, a square wave function, a sinusoidal function and combinations thereof.

[**0153**] Referring to **FIG. 42**, in a related embodiment RF power source **20** can have multiple independent channels **20***ch,* delivering separately modulated power to each RF electrode **18**. This can be accomplished through the use of separate channels **20***ch* in a parallel connection or timesharing on the same channel using a switching device or multiplexing device **46** and a serial connection or a combination of both. Such configurations reduces preferential heating that occurs when more energy is delivered to a zone of greater conductivity and less heating occurs around RF electrodes **18** which are placed into less conductive tissue. In use, a multichannel RF device **20** produces more uniform tissue ablations by solving the problems of uneven or time varying amounts of tissue hydration or blood perfusion over the target tissue site **5**" which tend to cause uneven conductivity and tissue heating.

[**0154**] In various embodiments electrodes **18** can be operated in a monopolar mode, a bipolar mode, or a combination of both and can be switchable between the two. Referring now to **FIG. 43**, when electrodes **18**/apparatus **10** are operated in a monopolar mode, an indifferent electrode patch or ground pad **18***g* (also called a return electrode) is attached to the patients skin using known methods (e.g. use of a conductive gel) and is also electrically coupled to power source **20** by a cable **20***gc* or other connecting means. Ground pad **18***g* serves to complete an electrical circuit between one or more electrodes **18**, the tissue site **5**' and the power source **20**. Ground pad **18***g* can be ground pad known in the art and can be made of a flexible material such as a resilient polymer and can include a smooth, texturized or ridged surface. Ground pad **18***g* has sufficient area to keep the current density at the point of contact with the patient to low enough to prevent any appreciable heating of the patient's skin. The ground pad can be an area in the range of 0.5 to 3 square feet, with specific embodiments of 1, 2, 2.5 square feet. The use of a texturized or ridged surface serves to increase the amount of pad surface area in electrical contact with tissue and thus reduce current densities and reduce the risk of pad burns.

[**0155**] Referring now to **FIGS. 44***a*-**44***c*, in various embodiments, one or more electrodes **18** coupled to housing **12** can be operated in a bipolar mode. Bipolar mode includes at least two electrode including one electrode that acts as a positive electrode **18***p* and another electrode **18***n* such that current flow from electrode **18***p* to **18***n*. Electrode array **18***a* can be configured with any number of positive or negative electrodes **18***p* and **18***n* as long as there is at least one of each. One configuration shown in **FIG. 44***a* includes a single positive and negative electrode **18***p* and **18***n*. Other configuration can include multiple positive electrodes **18***p* and only one negative electrode **18***n* or multiple positive and multiple negative electrodes. Tissue heating is localized and occurs adjacent both the positive and negative electrodes. The selection of positive and negative electrodes can be configured to control the area of heating to match the tumor shape and also minimize heating of surrounding tissue. In one embodiment shown in **FIG. 44***b,* return electrode **18***n* is located at the center or locus of circular or other geometric pattern of positive electrode **18***p* such that heating and the ablation volume **5***av* are substantially confined to the area bounded by the perimeter of the group of positive electrodes. In another embodiment shown in **FIG. 44***c,* the pattern of positive electrodes is arc shaped again with the return electrode located at the locus of the arc such that a pie shaped ablation volume **5***av* is produced. This ablation volume can be at least partly bounded by tissue surface **5***s* or tissue proximate surface **5***s*.

[**0156**] Referring to **FIG. 45**, all or portions of tissue surface **14** can be a conductive surface **14***con* configured as the either the energy delivery electrode or the return electrode. This can be accomplished by fabricating surface **14** from conductive materials, coatings, or from porous material configured to contain and or weep a conductive fluid film both configurations described herein. In various embodiments conductive surface **14***con* can be configured as a monopolar positive electrode, a monopolar return electrode or bipolar electrode. Switching between these different modes can be accomplished through the use of a switching device **46** such as a multiplexing device or programmably switching device coupled to one or more conductive surface **14***con*, electrodes **18** and power supply **20**.

[**0157**] Referring to **FIG. 46**, in a related embodiment conductive surface **14***con* can comprise one or more conductive areas **14***cona* which can each be individually controlled to an on/off state using a coupled multiplexing or switching device **46**. The use of switching device **46** allows the user to dynamically increase or decrease the conductive area **14***con* of contact surface **14** to do one or more of the following: (i) adjust the area of conductive surface **14** con as an energy delivery electrode or return electrode to compensate for changes in tissue impedance; (ii) adjust the area of tissue heated; (iii) adjust the rate of tissue heating; and (iv) adjust the area of area of conductive surface as a return electrode in order to prevent thermal damage to non-target tissue including coagulation of blood vessels such as the hepatic vein.

[**0158**] When used as the positive electrode or the return electrode, conductive contact surface **14***con* can be configured to evenly deliver energy to tissue surface **5***s* in electrical contact with contact surface **14** and so as to generate a more uniform thermal profile within target tissue volume **5**" and hence a more uniformly necrosed and ablated tissue volume. Similar benefits can be obtained for use of a conductive fluid film **14***f* described herein

[**0159**] Referring to **FIG. 47**, in related embodiments employing a conductive contact surface **14***con,* one or more conductive portions **14***con* can be selected as an electrode, including a return electrode **18***r* or **18***n* and one or more

electrodes **18** can be selected as the positive electrode **18***p*, using switching device **46** and so create a selectable composite vector(s) **18***v* of current or energy into target tissue **5'** having a selectable direction and magnitude. The selection and configuration of electrodes **18** to produce a given vector **18***v* can be controlled by logic resources **350** coupled to switching device **46** which can be a multiplexing device. The vector **18***v* can be in the volume **5***ve* defined by deployed electrodes **18**, or the volume **5***vec* deployed electrodes **18** and conductive surface **14***con*. In use, this approach allows the physician to more precisely control or titrate the delivery of RF or others electromagnetic energy to yield higher current densities and hence temperatures in selected portions of the target tissue volume and lower current densities in other selected areas. This configuration in turn provides benefit of providing a higher degree of cell necrosis/abation with a lower risk of tissue desiccation and excessive impedance build up.

[**0160**] Referring to **FIG. 48**, in another embodiment one or more electrodes **18** and/or conductive surface **14** con can be configured to produce a phased array of RF electrodes **18***pa* to obtain a zone or area of constructive signal interference **5***ci* within target tissue volume **5'** under tissue surface **5***s* and hence an enhanced thermal effect with more rapid tissue heating and necrosis. Phased array embodiments can include use of conductive surface **14***con* as either a positive electrode **18***p* or return electrode **18***r*. Electrodes **18** and/or conductive surface **14***con* can be coupled to a controller **339** described herein having logic resources (e.g. a microprocessor) **350** that adjusts the feedback signal, with a gradient search or matrix inversion algorithm known in the art, to provide a uniform electric field radiation into the target tissue site **5***ci*.

[**0161**] Depending upon the location of the tumor it may be advantageous to operate in a bipolar mode so as not to have the return electrical current flow through a narrowed or small portion of the liver where the tissue impedance can be great enough to cause a temperature increase sufficient to coagulate or damage the hepatic vein or other hepatic vasculature. Accordingly, referring to **FIGS. 50***a* and **50***b*, in an embodiment impedance measurement circuitry and/or controller/logic resources **339**/**350** (coupled to power source **20**) can be configured to determine if the return path impedance is sufficient to cause heating anywhere along the return path and automatically switch into a bipolar mode either prior to energy delivery or once such impedance or resulting temperature exceeds a preselected threshold. In a related embodiment, thermal, flow and coagulation sensors **22** can be positioned in the hepatic vasculature within target site **5'** or nearby tissue. Sensors **22** can monitor both the temperature of the hepatic vasculature as well as monitor blood flow rates there through the hepatic vasculature. Again sensors **22** are coupled to logic resources which switch from a monopolar to a bipolar mode, shut off or otherwise attenuate the delivery of power to target site **5'** when: (i) the tissue temperature exceeds an absolute threshold or a rate of increase; (ii) the blood flow rate falls below an absolute threshold or a rate of decrease; or (iii) a combination of items (i) and (ii). In these and related embodiments, sensors **22** can be positioned on electrode **18** or passive non energy delivering members which can be positioned at varying distances from energy delivery devices **18** so as to be to passively monitor tissue temperatures at selected distances from electrode **18**. Sensors **22** can be electronically coupled to logic resource in turn coupled to power source **20**. Such resources can include microprocessors containing embedded modules or software programs. Such microprocessors can include an Intel® Pentium® III chip or a PowerPC® chip manufactured by the Motorola Corporation. Such resource can also contained embedded control modules that include process control algorithms known in the art such as PID algorithms. The switching between monopolar to bipolar modes can be achieved by the use of switching circuitry **20***s* including multiplexer devices (including a densely packed wavelength multiplexor) coupled to one or more electrodes **18** as wells as return electrode **18***r* and tissue contact surface **14** including conductive portions **14***con*. Switching to bipolar mode also serves to keep RF induced heating closer to tissue surface **5***s* thus preventing the unwanted heating of deeper tissue containing healthy tissue and/or thermally sensitive structures. Thus in use, embodiments having the ability to have feedback control to switch between monopolar and bipolar modes present the advantage of more refined and faster control over the depth of tissue heating to prevent thermal injury of underlying healthy/sensitive tissue without having to reposition the electrodes.

[**0162**] Referring to **FIGS. 50***a*, **50***b* and **51**, in another embodiment of the invention surface treatment apparatus **10** can comprise a collapsible strut apparatus **110** configured to be coupled to power source **20**. Collapsible apparatus **110** can be configured to positionable within an endoscopic or a surgical introducing device **111** such as an endoscope, trocar and the like. Collapsible apparatus **110** has a collapsed or non deployed position shown in **50***a* and a deployed position shown in **FIG. 50***b*. Collapsible apparatus **110** includes a central elongated or shaft member **112** having a distal section **112***ds* including a end **112***de*. A needle electrode **118***n* can be fixedly or movably attached to tip **112***de*. Also shaft member **112** can include a lumen **112***l* which can be configured to allow the advancement of a rigid or a flexible advancement member **116**. Advancement member **116** can be flexible or rigid and can be guide wire, hypotube, or polymer shaft all having sufficient column strength to advance a distally coupled needle into tissue. Advancement member **116** can be coupled to a needle electrode **118***n* to allow its advancement into tissue.

[**0163**] A movable proximal hub **120** is slidably positioned over shaft **112** and is configured to slides over distal section **112***ds* and can be releasably locked in position in position using a first locking device **120***l* which can be a latch, locking nut or clamp known in the art. A distal hub **126** is positioned over distal end **112***de* and preferably is fixedly mounted. However the longitudinal position of hub **126** with respect to shaft longitudinal axis **112***al* can be adjusted using a second locking device **126***l*. Alternatively, in embodiment shown in **FIG. 51**, distal hub **126** can be movable and proximal hub **120** can be fixed. Also, proximal hub **120** can comprise an overtube **120***ot* that is slidably positioned over shaft **112**. Both of hubs **120** and **126** can be configured to be advanced and retracted by a coupled guidewire or other mechanical linkage known in the art. In an embodiment one, or both of hubs **120** and **126** can include a flange **121***f* or **126***f* that enables one or both hubs to be pushed (advanced) and pulled pack via means of either stiffened guide wires mechanically coupled (e.g. by welding) to either flange or a hollow advancement tube member **130** that is coupled to or otherwise pushes up against either flange. In yet another embodiment, either flange **121***f* or **126***f* can be configured to

act as pneumatic or fluidic seal against the lumen of an overlying introducer **111** such that either hub can be and retracted so as to deploy and retract electrodes **118** pneumatically or hydraulically using an air or fluid pressure source **140** known in the medical device arts. An example of air pressure source includes a tank of compressed gas and a fluid pressure source includes a syringe pump.

[**0164**] A plurality of strut members **122** are pivotally coupled to hub **120** using a pivotal connector **121** which can be a hinged bracket, clamp or other connector known in the art. A second pivotal connector **123** is coupled to the distal end of each strut member **122**. A second strut member **124** is pivotally coupled to each connector **121** so as to comprise a plurality of second strut members **124**. The distal end **124***d* of each second strut member **124** is pivotally coupled to a third pivotal connector **125** in turn coupled to fixed hub **126**.

[**0165**] A flexible guide tube member **128** is coupled to first strut member **122** preferably at pivotal joint **121**. In a specific embodiment, guide member **128** is coupled to a channel or slot **124***c* on or adjacent second strut **124**. Channel **124***c* can be semicircular, sector or u-shaped to mate and hold guide **128** using an interference fit or adhesive bond. Guide tube member **128** has a lumen **128***l* for positioning and advancement of an electrode **118** by a coupled advancement member **116** or other mechanical means. Guide tube can **128** also be coupled to a tube bracket **128***b* on strut **124**. When in the non-deployed state, guide tubes **128** are in proximity to shaft member **112** substantially parallel to axis **112***al*. However, in the deployed state guide tubes **128** are pushed out a lateral distance **128***ld* from shaft **112** at channel **124***c* by the deployment of coupled strut members **122** and **124** such that guide member now assumes a curved shape going from proximal hub **120** to its coupling at channel **124***c*. The curve can have one or more radii of curvature and can be s-shaped. However though curved in portions, guide tube **128** is configured to be substantially parallel to axis **112***al* such that electrodes **118** exiting deployed guide tubes **128** are also substantially parallel to axis **112***al*. This can be achieved by configuring or shaping the distal end of guide tube **128** to curve at least partly inward in the non-deployed state. This can be achieved using metalworking techniques known in the art including mandrel shaping, and also through the use of shape memory materials.

[**0166**] Collectively hub **120**, strut members **122**, connectors **123**, strut members **124**, connector **125**, hub **126** and the distal portion **112***ds* comprise an expansion device **129** that is used to put apparatus **110** in its deployed state. Apparatus **110** can be put into its deployed state by either the distal advancement of hub **120**, when hub **126** is fixed, or the proximal retraction of hub **126** when hub **120** is fixed. In the non deployed state apparatus **110**, including the coupled combination of shaft **112**, strut **122**, strut **124** and guide tube **128** has a cross sectional profile that can be advanced through a standard sized endoscope or trocar (or other surgical introducer), including endoscopes having an internal diameter in the range of 0.1 to 1.0 inch with specific embodiments of 0.2, 0.5 and 0.8 inches. In a preferred embodiment, apparatus **110** is configured to be advanced through an introducing device **111** having an inner diameter of 1 cm thus the maximum radial profile or diameter **110***d* of apparatus in the nondeployed state is less than 1 cm, preferably by 0.002 or more to have 0.001" clearance on either side of apparatus **110** within the introducing device.

[**0167**] When in the deployed state, the linked struts **122** and **124** of expansion device **129** expand out laterally in a triangular shape to push guide tubes **128** out laterally in a substantially, triangular, diamond circular or oval pattern having shaft **120** as its center so as to enable electrodes **118** contact tissue surface **5***s* in such a pattern.

[**0168**] Turning now to a discussion of the materials of apparatus **110**, shaft member **112** and advancement member **116** can be fabricated from metals such as 304 stainless steel or Nitinol and the like or a rigid polymer such as a thermoset plastic, NYLON, ULTEM, polyimide and the like. Also all or portion of shaft **112** can have an insulative (both electrical and thermal) coating **113** which can include TEFLON, polyimide, or silicone. Coating **113** can also be lubricous coating such as TEFLON which serves to reduce the friction of moving components and tissue in contact with shaft **116**. The interior of lumen **1121** as well as advancement member **116** can also have coating **113**. Similarly advancement member **116** can have an insulative coating **113** which can be in the form of a movable sleeve **113***s* so as to expose and/or create an energy delivery surface **118***s* of electrode **118**. Sleeve **113***s* can be mechanically linked to a coupled mechanical actuator **24**" on handpiece **24** which can be coupled to shaft member **112**. Struts **122** and **124** can be rigid or flexible and can be constructed from **304** or **304***v* stainless steel (for both rigid and flexible embodiments) and shaped memory metals such as Nitinol for flexible embodiments. Pivotal joints **121**, **123** and **125** can be fabricated from machined or forged metals including **304** stainless steel and hardened tool steel. They can also include hinged, swaged, ball bearing or roller bearing pivot mechanisms known in the art. Guide tubes **128** can include rigid and flexible portions and can be fabricated from metal hypotubes which can be made from shape memory materials or high strength and/or resilient polymers such as polyimide, PEEK, HDPE, (including radiated materials), PEBAX, polyurethane and ULTEM. Additionally, the distal portions **128***d* of guide tubes **128** can be more flexible than proximal portions **128***p* in order to assume a curved shape in the deployed state and then reassume a substantially linear shape in the non-deployed state. Accordingly the distal section **128***d* can be from flexible polymers such as polyurethane and or can have a smaller diameter verses proximal portions **128***p*.

[**0169**] In an alternative embodiment, one or more of struts members **122** and **124** can be configure as fluidic or hydraulic strut members and can be configured to be deployed via the application of fluidic or pneumatic pressure from a pressure source **140** described herein. This can be achieved by configuring one or more strut members **122** and **124** as hollow (single or multi-lumen) or porous tubular members or catheters fabricated from resilient/inflatable polymers described herein.

[**0170**] Collapsible apparatus **110** and its methods of use provide the benefit of allowing the physician to treat varying portions of a tumor mass **5**" as well as multiple tumor masses without having to significantly reposition the device using either open surgical procedures or endoscopic or other minimally invasive methods. This is due to the ability of apparatus **110** to have its electrode **118** be deployed at varying depths and varying locations without having to

significantly reposition the apparatus. Referring now to **FIG. 52**, in an embodiment of the method of the invention, the physician would position apparatus **110** at the target tissue site **5'** deploy the expansion device **129** to a selected first deployed diameter **129***d'* and deploy one or more electrode **118** through guide tubes **128** and deliver RF energy to produce the desire ablation volume **5***av*. Having done so, the physician would withdrawal deployed electrode **118** back into the guide tubes **128** and then expand or contract expansion device **129** to a second diameter **129***dd"* and redeploy one or more electrodes **118** and deliver RF energy to produce a second ablation volume **5***av'* or expand the first volume **5***av*. In this way the physician can avoid a critical anatomical structure **5***as* positioned within a target tissue site **5'** including within a tumor mass **5"** or between two or more nearby tumor masses **5"**. This method also provides the benefit of producing larger ablation volumes without the risk of impedance related shut downs, due to excessive tissue desiccation and impedance buildup in the core of the ablation volume **5***avc* which is continuously heated if the electrodes are not redeployed during the delivery of RF or other energy.

[**0171**] Referring now to **FIGS. 53***a* and **53***b*, in an alternative embodiment expansion device **129** can comprise an expandable balloon device known in the art such as a dilatation balloon known in the art. Guide tubes **128** can be distributed along a perimeter **129***p* or a portion thereof of balloon device **128**. Balloon device **129** can be coupled to guide tubes **128** using adhesive bonding and other polymer bonding methods known in the art (or alternatively balloon device **129** and guide tubes **128** can be integrally formed). Balloon **129** is expanded to a selectable diameter to achieve a selected spacing or diameter **134***d* of a geometric shape whose perimeter is defined by deployed guide tubes **128**. The shape or diameter of this shape in turn defines the collective shape or pattern **134** of deployed electrodes **118**. The degree of inflation of balloon **129** can be used to match the diameter of deployed shape **134** to that of the tumor mass **5"** or selected target tissue site **5'**.

[**0172**] Balloon device **129** can be a balloon catheter or other inflatable device known in the art made from balloon materials known in the medical device arts including non-compliant materials such polyester, polyethylene (HDPE including radiated HDPE) latex and compliant material including silicones, polyurethane and latex. Balloon device **129** can be fabricated using balloon blowing methods known in the art including the use of mold blowing methods.

[**0173**] In an embodiment the maximum inflated diameter **129***d* of balloon can be selectable and can include diameters in the range of 0.1 to 3 inches with specific embodiments of 0.25, 0.5, 0.75 1, 1.5, 2 and 2.5 inches This can be achieved through the use of non-compliant balloon materials blown in fixed balloon molds of set diameter. The maximum diameter can also be achieved through the of E-beam irradiation (either before or after balloon fabrication) to cross link the polymer chains of the balloon materials such as HDPE and so fix the maximum amount of their expansion.

[**0174**] Balloon **129** can have a variety of shapes including but not limited to spherical, oval, a tapered oval and cylindrical. In a specific embodiment balloon is a disk shaped (e.g. a short cylinder) balloon. Such balloons can be fabricated using disc shaped molds. They can also be fabricated by irradiating the top and bottom faces of the balloon making them hold a shape (e.g. non compliant due to cross linking) while the sides of the balloon that are joined to guide tubes **128** receive less or no irradiation, are less cross linked and hence are free to expand to the selected diameter.

[**0175**] In an alternative embodiment shown in **FIG. 53***b* a sizing or restraining member **131** can be disposed over balloon **129** and used to control the maximum inflated diameter **129***d* of balloon **129** as well as the inflated shape of balloon **129**. The sizing member can be coupled to the proximal and distal portions of balloon **129** and can comprise a DACRON sheath or other collapsible yet substantially non-compliant material known in the biomedical material arts including polyesters, PET and the like.

[**0176**] In various methods of use, expandable balloon **129** can be expanded in diameter (using an inflation device described herein) in incremental amounts for the use of compliant material such as silicone or for non compliant materials expandable balloon is expanded to final set diameter preselected by the physician depending upon the size of the tissue mass **5"** or desired ablation volume **5**av. To facilitate selection of different diameter balloons, in an embodiment the expandable balloon can be detachably coupled to the distal portion **112***dp* of shaft **112**

[**0177**] Expandable balloon **129** can be expanded using any number of inflation devices **133** and pressure sources known in the art including a automated pumps and syringes pumps with coupled pressure gauges, including screw type syringe pumps (handheld and automated) and computer controlled inflation devices that automatically adjust the pressure to produce a selected diameter using coupled position and sizing sensors. The balloon can be inflated by means of an inflation lumen **112***l* in shaft **112** which is coupled to balloon **129**. The balloon can also be configured to receive a liquid media including a radio-opaque contrast solution known in the art such that the physician can observe the amount of expansion under fluoroscopy or other imaging modality known in the art. In a related embodiment balloon **120** can be configured to receive an echogenic solution such that balloon can visible under ultrasonagraphy.

[**0178**] In use, expandable balloon device **129** provides the advantage to the physician of expansion device that can be readily advanced through endoscopic and other minimally invasive introducing devices and at the same time achieve a selectable and controlled size and shape for the pattern of deployed electrodes **118** such that this pattern is matched to the size of the desired ablation volume **5***av* to treat a selected tumor mass **5"**. More importantly, use of expandable balloon **129** in various embodiments enables the creation of progressively larger ablation volumes simply by expanding balloon **129** and subsequently deploying the electrode and delivering ablative energy without having to reposition apparatus **110**. This reduces both procedure time and reduces the risks of contamination of healthy tissue with cancerous cells from a tumor mass **5'** by unnecessary movement of the apparatus **110** at the treatment site.

[**0179**] The following discussion pertains particularly to the use of an RF energy source and surface treatment apparatus **10** or **110** with control systems including feedback control systems, computer and microprocessor based control systems. Referring now to **FIGS. 54 and 55**, in various embodiments a feedback control system **329** can be con-

nected to energy source **320**, sensors **324** and energy delivery devices **314** and **316**. For purposes of this discussion, energy delivery devices **314** and **316** will now be referred to as RF electrodes or antennas **314** and **316** and energy source **320** will now be an RF energy source. However it will be appreciated that all other energy delivery devices and sources discussed herein are equally applicable and devices similar to those associated with surface treatment ablation apparatus **10** can be utilized with laser optical fibers, microwave devices and the like. The impedance or temperature of the tissue, or of RF electrodes **314** and **316** is monitored, and the output power of energy source **320** adjusted accordingly. The physician can, if desired, override the closed or open loop system.

[**0180**] In an embodiment, feedback control system **329** receives temperature or impedance data from sensors **324** and the amount of electromagnetic energy received by energy delivery devices **314** and **316** is modified from an initial setting of ablation energy output, ablation time, temperature, and current density (the "Four Parameters"). Feedback control system **329** can automatically change any of the Four Parameters individually or in combination. Feedback control system **329** can detect impedance or temperature and change any of the Four Parameters. Feedback control system **329** can include a multiplexer to multiplex different energy delivery devices/electrodes, a temperature detection circuit that provides a control signal representative of temperature or impedance detected at one or more sensors **324**. A microprocessor **339** can be connected to the temperature control circuit.

[**0181**] The user of apparatus **10** can input an impedance value that corresponds to a setting position located at apparatus **10**. Based on this value, along with measured impedance values, feedback control system **329** determines an optimal power and time need in the delivery of RF energy. Temperature is also sensed for monitoring and feedback purposes. Temperature can be maintained to a certain level by having feedback control system **329** adjust the power output automatically to maintain that level.

[**0182**] In another embodiment, feedback control system **329** determines an optimal power and time for a baseline setting. Ablation volumes or lesions are formed at the baseline first. Larger lesions can be obtained by extending the time of ablation after a center core is formed at the baseline. The completion of lesion creation can be checked by advancing energy delivery device **316** from distal end **16** of introducer **12** to a position corresponding to a desired lesion size and monitoring the temperature at the periphery of the lesion such that a temperature sufficient to produce a lesion is attained.

[**0183**] The closed loop system **329** can also utilize a controller **338** to monitor the temperature, adjust the RF power, analyze the result, refeed the result, and then modulate the power. More specifically, controller **338** governs the power levels, cycles, and duration that the RF energy is distributed to electrodes **314** and **316** to achieve and maintain power levels appropriate to achieve the desired treatment objectives and clinical endpoints. Controller **338** can also in tandem govern the delivery of electrolytic, cooling fluid and, the removal of aspirated tissue. Controller **338** can also in tandem monitor for excessive impedance at the tissue site and switch power sources **320** and electrodes **314** and **316** from a monopolar mode to a bipolar mode or switch from use of ground pad electrode **18***g* to conductive portions **14** con of tissue contact surface **14**. Controller **338** can be integral to or otherwise coupled to power source **320**. The controller **338** can be also be coupled to an input/output (PO) device such as a keyboard, touchpad, PDA, microphone (coupled to speech recognition software resident in controller **338** or other computer) and the like.

[**0184**] Referring now to **FIG. 54**, all or portions of feedback control system **329** are illustrated. Current delivered through RF electrodes **314** and **316** (also called primary and secondary RF electrodes/antennas **314** and **316**) is measured by a current sensor **330**. Voltage is measured by voltage sensor **332**. Impedance and power are then calculated at power and impedance calculation device **334**. These values can then be displayed at a user interface and display **336**. Signals representative of power and impedance values are received by controller **338** which can be a microprocessor **338**.

[**0185**] A control signal is generated by controller **338** that is proportional to the difference between an actual measured value, and a desired value. The control signal is used by power circuits **340** to adjust the power output in an appropriate amount in order to maintain the desired power delivered at the respective primary and/or secondary antennas **314** and **316**. In a similar manner, temperatures detected at sensors **324** provide feedback for maintaining a selected power. The actual temperatures are measured at temperature measurement device **342**, and the temperatures are displayed at user interface and display **336**. A control signal is generated by controller **338** that is proportional to the difference between an actual measured temperature, and a desired temperature. The control signal is used by power circuits **340** to adjust the power output in an appropriate amount in order to maintain the desired temperature delivered at the respective sensor **324**. A multiplexer **346** can be included to measure current, voltage and temperature, at the numerous sensors **324** as will deliver and distribute energy between primary electrodes **314** and secondary electrodes **316**.

[**0186**] Controller **338** can be a digital or analog controller, or a computer with embedded, resident or otherwise coupled software. In an embodiment, controller **338** can be a Pentium® family microprocessor manufacture by the Intel® Corporation (Santa Clara, Calif.). When controller **338** is a computer it can include a CPU coupled through a system bus. On this system can be a keyboard, a disk drive, or other non-volatile memory systems, a display, and other peripherals, as are known in the art. Also coupled to the bus are a program memory and a data memory. In various embodiments controller **338** can be coupled to imaging systems, including but not limited to ultrasound, CT scanners (including fast CT scanners such as those manufacture by the Imatron Corporation (South San Francisco, Calif.), X-ray, MRI, mammographic X-ray and the like. Further, direct visualization and tactile imaging can be utilized.

[**0187**] User interface and display **336** can include operator controls and a display. In an embodiment, user interface **336** can be a PDA device known in the art such as a Palm® family computer manufactured by Palm® Computing (Santa Clara, Calif.). Interface **336** can be configured to allow the user to input control and processing variables, to enable the controller to generate appropriate command signals. Inter-

face **336** can also receives real time processing feedback information from one or more sensors **324** for processing by controller **338**, to govern the delivery and distribution of energy, fluid etc.

[**0188**] The output of current sensor **330** and voltage sensor **332** is used by controller **338** to maintain a selected power level at primary and secondary antennas **314** and **316**. The amount of RF energy delivered controls the amount of power. A profile of power delivered can be incorporated in controller **338**, and a preset amount of energy to be delivered can also be profiled.

[**0189**] Circuitry, software and feedback to controller **338** result in process control, and the maintenance of the selected power, and are used to change, (i) the selected power, including RF, microwave, laser and the like; (ii) the duty cycle (on-off and wattage); (iii) bipolar or monopolar energy delivery; and (iv) infusion medium delivery, including flow rate and pressure. These process variables are controlled and varied, while maintaining the desired delivery of power independent of changes in voltage or current, based on temperatures monitored at sensors **324**. A controller **338** can be incorporated into feedback control system **329** to switch power on and off, as well as modulate the power. Also, with the use of sensor **324** and feedback control system **329**, tissue adjacent to RF electrodes **314** and **316** can be maintained at a desired temperature for a selected period of time without causing a shut down of the power circuit to electrode **314** due to the development of excessive electrical impedance at electrode **314** or adjacent tissue. In related embodiment control system **329** can be used to determine and control the deployment position and penetration depth of electrode **314**.

[**0190**] Referring now to **FIG. 55**, current sensor **330** and voltage sensor **332** are connected to the input of an analog amplifier **344**. Analog amplifier **344** can be a conventional differential amplifier circuit for use with sensors **324**. The output of analog amplifier **344** is sequentially connected by an analog multiplexer **346** to the input of A/D converter **348**. The output of analog amplifier **344** is a voltage which represents the respective sensed temperatures. Digitized amplifier output voltages are supplied by A/D converter **348** to a microprocessor **350**. Microprocessor **350** may be Model No. 68HCII available from Motorola. However, it will be appreciated that any suitable microprocessor or general purpose digital or analog computer can be used to calculate impedance or temperature.

[**0191**] Microprocessor **350** sequentially receives and stores digital representations of impedance and temperature. Each digital value received by microprocessor **350** corresponds to different temperatures and impedances. Calculated power and impedance values can be indicated on user interface and display **336**. Alternatively, or in addition to the numerical indication of power or impedance, calculated impedance and power values can be compared by microprocessor **350** with power and impedance limits. When the values exceed predetermined power or impedance values, a warning can be given on user interface and display **336**, and additionally, the delivery of RF energy can be reduced, modified or interrupted. A control signal from microprocessor **350** can modify the power level supplied by energy source **320** to RF electrodes **314** and **316**. In a similar manner, temperatures and positions detected at sensors **324** provide feedback for determining the extent and rate of (i) tissue hyperthermia; (ii) cell necrosis or ablation; and (iii) when a boundary of desired cell necrosis or ablation has reached the physical location of sensors **324**.

Conclusion

[**0192**] It will be appreciated that the applicants have provided a novel and useful apparatus and method for the treatment of tumors using surgical or minimally invasive methods. The foregoing description of a preferred embodiment of the invention has been presented for purposes of illustration and description. It is not intended to be exhaustive or to limit the invention to the precise forms disclosed. Embodiments of the invention can be configured for the treatment of tumor and tissue masses at or beneath a tissue surface in a number of organs including but no limited to the liver, breast, bone and lung. However, embodiments of the invention are applicable to other organs and tissue as well. Obviously, many modifications and variations will be apparent to practitioners skilled in this art. Further, elements from one embodiment can be readily recombined with elements from one or more other embodiments. Such combinations can form a number of embodiments within the scope of the invention. It is intended that the scope of the invention be defined by the following claims and their equivalents.

What is claimed is:

1. A tissue surface treatment apparatus, comprising:

a housing having a proximal end, a distal end including a tissue contacting surface having a plurality of apertures, the housing defining an interior;

an energy delivery device positionable in the housing interior, the energy delivery device including at least one electrode with a tissue penetrating distal end in substantial alignment with an aperture of the plurality of apertures, the at least one electrode configured to be advanced from the housing interior through the aperture and into a target tissue site to define an ablation volume at least partly bounded by a tissue surface;

a handpiece coupled to the housing;

an advancement device coupled to the energy delivery device, the advancement device being at least partly positionable within at least one of the housing or the handpiece, the advancement device configured to advance at least a portion of the at least one electrode from the housing interior into the target tissue site and completely withdrawal the at least one electrode into the housing interior; and

a cable coupled to one of the housing or the energy delivery device, the cable being configured to be coupled to an energy source.

2. The apparatus of claim 1, wherein the at least one electrode is an RF electrode and the energy source is an RF source.

3. The apparatus of claim 2, wherein one of the apparatus or the energy delivery device is configured to operate in a monopolar mode, a bipolar mode or is switchable between monopolar and bipolar modes.

4. The apparatus of claim 1, wherein the advancement member is substantially cylindrically shaped or substantially oval shaped.

5. The apparatus of claim 1, wherein the advancement member is configured to move reciprocally within the housing.

6. The apparatus of claim 1, wherein the advancement member is a cam member.

7. The apparatus of claim 1, wherein the advancement is configured to be advanced by a solenoid or electric motor.

8. The apparatus of claim 1, wherein the advancement member is configured to be advanced by fluid pressure, pneumatic pressure or hydraulic pressure.

9. The apparatus of claim 1, wherein at least a portion of the tissue contact surface is substantially rigid.

10. The apparatus of claim 1, further comprising:

a current and voltage measurement device coupled to the energy delivery device.

11. The apparatus of claim 10, wherein the current and voltage measurement device is configured to monitor or control a delivery of energy delivery device to the tissue site.

12. The apparatus of claim 1, wherein the energy delivery device is one of a plurality of RF electrodes, an array of RF electrodes an array of RF monopolar electrodes or an array of RF bipolar electrodes.

13. The apparatus of claim 12, further comprising:

a multiplexing device coupled to at least a portion of the plurality of RF electrodes, the multiplexing device configured to be coupled to at least one of a power supply or logic resources.

14. The apparatus of claim 12, wherein the logic resources are configured to generate a selectable RF energy vector in a tissue volume.

15. The apparatus of claim 14, wherein the tissue volume is defined by the plurality of RF electrodes, or the RF electrodes and a conductive portion of the tissue contact surface.

16. A tissue surface treatment apparatus, comprising:

a housing having a proximal end, a distal end including a tissue contacting surface having a plurality of apertures, the housing defining an interior;

an energy delivery device positionable in the housing interior, the energy delivery device including at least one electrode with a tissue penetrating distal end, the at least one electrode configured to be advanced from the housing interior through the aperture and into a target tissue site to define an ablation volume at least partly bounded by a tissue surface, wherein the at least one electrode has a longitudinal axis in substantial alignment with one of a longitudinal axis of the aperture, a locus of the aperture, or a line perpendicular to a plane of the aperture;

a handpiece coupled to the housing;

an advancement device coupled to the energy delivery device, the advancement device being at least partly positionable within at least one of the housing or the handpiece, the advancement device configured to advance at least a portion of the at least one electrode from the housing interior into the target tissue site and completely withdrawal the at least one electrode into the housing interior; and

a cable coupled to one of the housing or the energy delivery device, the cable being configured to be coupled to an energy source.

17. A tissue surface treatment apparatus, comprising:

a housing having a proximal end, a distal end including a tissue contacting surface having a plurality of apertures, the housing defining an interior;

an energy delivery device positionable in the housing interior, the energy delivery device including at least one electrode with a tissue penetrating distal end in substantial alignment with an aperture of the plurality of apertures, the at least one electrode configured to be advanced from the housing interior through the aperture and deployed into a target tissue site with curvature to define an ablation volume at least partly bounded by a tissue surface wherein the at least one electrode is deployable with curvature from the housing;

a handpiece coupled to the housing;

an advancement device coupled to the energy delivery device, the advancement device being at least partly positionable within at least one of the housing or the handpiece, the advancement device configured to advance at least a portion of the at least one electrode from the housing interior into the target tissue site and completely withdrawal the at least one electrode into the housing interior; and

a cable coupled to one of the housing or the energy delivery.

18. A tissue surface treatment apparatus, comprising:

a housing having a proximal end, a distal end including a tissue contacting surface having a plurality of apertures, the housing defining an interior;

an energy delivery device positionable in the housing interior, the energy delivery device including at least one electrode with a tissue penetrating distal end in substantial alignment with an aperture of the plurality of apertures, the at least one electrode configured to be advanced from the housing interior through the aperture and deployed into a target tissue at an angle with respect to a plane of the tissue contact surface to define an ablation volume at least partly bounded by a tissue surface wherein the at least one electrode is deployable with curvature from the housing;

a handpiece coupled to the housing;

an advancement device coupled to the energy delivery device, the advancement device being at least partly positionable within at least one of the housing or the handpiece, the advancement device configured to advance at least a portion of the at least one electrode from the housing interior into the target tissue site and completely withdrawal the at least one electrode into the housing interior; and

a cable coupled to one of the housing or the energy delivery.

19. The apparatus of **18**, wherein the angle is one of a substantially obtuse, a perpendicular or an acute angle.

20. A tissue surface treatment apparatus, comprising:

a housing having a proximal end, a distal end including a tissue contacting surface having a plurality of apertures, the housing defining an interior;

an energy delivery device positionable in the housing interior, the energy delivery device including at least one electrode with a tissue penetrating distal end in substantial alignment with an aperture of the plurality of apertures, the at least one electrode configured to be advanced from the housing interior through the aperture and deployed to a selectable depth into a target tissue to define an ablation volume at least partly bounded by a tissue surface wherein the at least one electrode is deployable with curvature from the housing;

a handpiece coupled to the housing;

an advancement device coupled to the energy delivery device, the advancement device being at least partly positionable within at least one of the housing or the handpiece, the advancement device configured to advance at least a portion of the at least one electrode from the housing interior into the target tissue site and completely withdrawal the at least one electrode into the housing interior; and

a cable coupled to one of the housing or the energy delivery.

21. The apparatus of claim 20, wherein the selectable depth is up to about 4 cm.

22. The apparatus of claim 20, wherein one of the handpiece or an actuator coupled to the handpiece is configured to control the selectable depth.

23. The apparatus of claim 20, wherein the at least one electrode includes a first electrode and a second electrode.

24. The apparatus of claim 23, wherein the first electrode is deployable to a first depth and a second electrode is deployable to a second depth independent of the first depth.

25. The apparatus of claim 23, wherein the first electrode is deployable at first angle with respect to a plane of the tissue contact surface and the second electrode is deployable to a second angle with respect to a plane of the tissue contact surface independent of the first angle.

26. A tissue surface treatment apparatus, comprising:

a housing having a proximal end, a distal end including a tissue contacting surface having a plurality of apertures, the housing defining an interior;

an energy delivery device positionable in the housing interior, the energy delivery device including at least one electrode with a tissue penetrating distal end in substantial alignment with an aperture of the plurality of apertures, the at least one electrode configured to be advanced from the housing interior through the aperture and into a target tissue site to define an ablation volume at least partly bounded by a tissue surface;

a handpiece coupled to the housing, the handpiece including at least one of a bendable portion or a curved portion;

an advancement device coupled to the energy delivery device, the advancement device being at least partly positionable within at least one of the housing or the handpiece, the advancement device configured to advance at least a portion of the at least one electrode from the housing interior into the target tissue site and completely withdrawal the at least one electrode into the housing interior; and

a cable coupled to one of the housing or the energy delivery device, the cable being configured to be coupled to an energy source.

27. The apparatus of claim 26, wherein the bendable portion includes one of a hinged section, an articulated section, a flexible section or a pivotal coupling.

28. The apparatus of claim 26, wherein the handpiece further comprises a substantially straight portion coupled to one of the bendable portion or the curved portion.

29. A tissue surface treatment apparatus, comprising:

a housing having a proximal end, a distal end including a tissue contacting surface having a plurality of apertures, the housing defining an interior, at least a portion of the tissue contact surface having at least one of curved contour, a concave contour a convex contour or a sloping contour;

an energy delivery device positionable in the housing interior, the energy delivery device including at least one electrode with a tissue penetrating distal end in substantial alignment with an aperture of the plurality of apertures, the at least one electrode configured to be advanced from the housing interior through the aperture and into a target tissue site to define an ablation volume at least partly bounded by a tissue surface;

a handpiece coupled to the housing;

an advancement device coupled to the energy delivery device, the advancement device being at least partly positionable within at least one of the housing or the handpiece, the advancement device configured to advance at least a portion of the at least one electrode from the housing interior into the target tissue site and completely withdrawal the at least one electrode into the housing interior; and

a cable coupled to one of the housing or the energy delivery device, the cable being configured to be coupled to an energy source.

30. A tissue surface treatment apparatus, comprising:

a housing having a proximal end, a distal end including a tissue contacting surface having a plurality of apertures, the housing defining an interior, at least a portion of the tissue contact surface being substantially conformable, controllably conformable or bendable;

an energy delivery device positionable in the housing interior, the energy delivery device including at least one electrode with a tissue penetrating distal end in substantial alignment with an aperture of the plurality of apertures, the at least one electrode configured to be advanced from the housing interior through the aperture and into a target tissue site to define an ablation volume at least partly bounded by a tissue surface;

a handpiece coupled to the housing;

an advancement device coupled to the energy delivery device, the advancement device being at least partly positionable within at least one of the housing or the handpiece, the advancement device configured to advance at least a portion of the at least one electrode from the housing interior into the target tissue site and completely withdrawal the at least one electrode into the housing interior; and

a cable coupled to one of the housing or the energy delivery device, the cable being configured to be coupled to an energy source.

31. The apparatus of claim 30, wherein at least a portion of the contact surface is coupled to at least one of a handpiece, an actuator, or an actuator coupled to the handpiece and is controllably movable or deflectable responsive to movement of one the actuator or the actuator coupled to the handpiece.

32. The apparatus of claim 31, wherein at least a portion of the contact surface is mechanically coupled to connecting member coupled to one of the actuator, the handpiece, or the actuator coupled to the handpiece.

33. The apparatus of claim 30, the tissue contact surface has one of a curved contour, a concave contour or a convex contour.

34. The apparatus of claim 30, wherein the conformable portion includes at least one of an articulated portion, a hinged portion a flexible portion or an elastomeric portion.

35. The apparatus of claim 34, wherein at least a portion of the conformable surface is coupled to a connecting member coupled to an actuator positioned on the handpiece, wherein the conformable surface is movable responsive to movement of the actuator.

36. The apparatus of **30**, wherein at least a portion of the conformable surface is inflatable, expandable, or an expandable balloon.

37. The apparatus of claim 30, wherein the tissue contacting surface is substantially circular shaped or substantially oval shaped.

38. The apparatus of claim 30, wherein the tissue contacting surface has a substantially radiused or tapered edge.

39. The apparatus of claim 30, wherein at least a portion of the tissue contact surface includes an insulative layer or coating.

40. A tissue surface treatment apparatus, comprising:

a housing having a proximal end, a distal end including a tissue contacting surface having a plurality of apertures, the housing defining an interior, at least a portion of the tissue contact surface including a movable or detachable insulative layer;

an energy delivery device positionable in the housing interior, the energy delivery device including at least one electrode with a tissue penetrating distal end in substantial alignment with an aperture of the plurality of apertures, the at least one electrode configured to be advanced from the housing interior through the aperture and into a target tissue site to define an ablation volume at least partly bounded by a tissue surface;

a handpiece coupled to the housing;

an advancement device coupled to the energy delivery device, the advancement device being at least partly positionable within at least one of the housing or the handpiece, the advancement device configured to advance at least a portion of the at least one electrode from the housing interior into the target tissue site and completely withdrawal the at least one electrode into the housing interior; and

a cable coupled to one of the housing or the energy delivery device, the cable being configured to be coupled to an energy source.

41. A tissue surface treatment apparatus, comprising:

a housing having a proximal end, a distal end including a tissue contacting surface having a plurality of apertures, the housing defining an interior;

an energy delivery device positionable in the housing interior, the energy delivery device including at least one electrode with a tissue penetrating distal end in substantial alignment with an aperture of the plurality of apertures, the at least one electrode configured to be advanced from the housing interior through the aperture and into a target tissue site to define an ablation volume at least partly bounded by a tissue surface;

a handpiece coupled to the housing;

an advancement device coupled to the energy delivery device, the advancement device being at least partly positionable within at least one of the housing or the handpiece, the advancement device configured to advance at least a portion of the at least one electrode from the housing interior into the target tissue site and completely withdrawal the at least one electrode into the housing interior;

a switching device coupled to at least one of the at least one electrode, a power supply coupled to the at least one electrode or a ground pad electrode coupled to the power supply;

impedance measurement circuitry coupled to the at least one of at least one electrode or the ground pad electrode;

logic resources coupled to at least one of the impedance measurement circuitry or the switching device, the logic resources configured to redirect at least a portion of a current flow going to the ground pad electrode responsive to an impedance change measured by the impedance measurement circuitry; and

a cable coupled to one of the housing or the energy delivery device, the cable being configured to be coupled to the power supply.

42. The apparatus of **41**, wherein one of the logic resources or the switching device are configured to switch an RF mode of the least one electrode from a RF monopolar mode to an RF bipolar mode responsive to an impedance change measured by the impedance measurement circuitry.

43. The apparatus of claim 42, wherein the switching device is a multiplexing device.

44. A tissue surface treatment apparatus, comprising:

a housing having a proximal end, a distal end including a tissue contacting surface having a plurality of apertures, the housing defining an interior;

an energy delivery device positionable in the housing interior, the energy delivery device including at least one electrode with a tissue penetrating distal end in substantial alignment with an aperture of the plurality of apertures, the at least one electrode configured to be advanced from the housing interior through the aperture and into a target tissue site to define an ablation volume at least partly bounded by a tissue surface;

a handpiece coupled to the housing;

an advancement device coupled to the energy delivery device, the advancement device being at least partly positionable within at least one of the housing or the handpiece, the advancement device configured to advance at least a portion of the at least one electrode from the housing interior into the target tissue site and completely withdrawal the at least one electrode into the housing interior;

a multiplexing device coupled to the at least one electrode, a power supply coupled to the at least one electrode or a ground pad electrode coupled to the power supply; and

a cable coupled to at least one of the housing, the multiplexing device or the energy delivery device, the cable being configured to be coupled to a power supply.

45. A tissue surface treatment apparatus, comprising:

a housing having a proximal end, a distal end including a tissue contacting surface having a plurality of apertures, at least a portion of the tissue contact surface being a conductive contact surface, the housing defining an interior;

an energy delivery device positionable in the housing interior, the energy delivery device including at least one electrode with a tissue penetrating distal end in substantial alignment with an aperture of the plurality of apertures, the at least one electrode configured to be advanced from the housing interior through the aperture and into a target tissue site to define an ablation volume at least partly bounded by a tissue surface;

a handpiece coupled to the housing;

an advancement device coupled to the energy delivery device, the advancement device being at least partly positionable within at least one of the housing or the handpiece, the advancement device configured to advance at least a portion of the at least one electrode from the housing interior into the target tissue site and completely withdrawal the at least one electrode into the housing interior; and

a cable coupled to at least one of the housing ,the energy delivery device, or the conductive surface, the cable being configured to be coupled to an energy source.

46. The apparatus of claim 45, wherein at least a portion of the conductive contact surface is configurable as a return electrode.

47. The apparatus of claim 46, wherein the at least one electrode is an RF electrode configured to operate in a monopolar or a bipolar mode.

48. The apparatus of claim 45, further comprising:

a switching device coupled to at least one of the conductive contact surface, the at least one electrode, a power supply coupled to the at least one electrode or a ground pad electrode coupled to the power supply;

impedance measurement circuitry coupled to at least one of the at least one electrode or the ground pad electrode; and

logic resources coupled to at least one of the impedance measurement circuitry or the switching device, the logic resources configured to redirect at least a portion of a current flow going to the ground pad electrode to the conductive contact surface responsive to an impedance change measured by the impedance measurement circuitry.

49. The apparatus of claim 48, wherein the switching device is a multiplexing device.

50. A tissue surface treatment apparatus, comprising:

a housing having a proximal end, a distal end including a tissue contacting surface having a plurality of apertures, at least a portion of the tissue contact surface being a porous portion comprising a porous material, the housing defining an interior;

an energy delivery device positionable in the housing interior, the energy delivery device including at least one electrode with a tissue penetrating distal end in substantial alignment with an aperture of the plurality of apertures, the at least one electrode configured to be advanced from the housing interior through the aperture and into a target tissue site to define an ablation volume at least partly bounded by a tissue surface;

a handpiece coupled to the housing;

an advancement device coupled to the energy delivery device, the advancement device being at least partly positionable within at least one of the housing or the handpiece, the advancement device configured to advance at least a portion of the at least one electrode from the housing interior into the target tissue site and completely withdrawal the at least one electrode into the housing interior; and

a cable coupled to one of the housing or the energy delivery device, the cable being configured to be coupled to an energy source.

51. The apparatus of claim 50, wherein the porous portion is configured to deliver one of a fluid, a fluid film or a vacuum to the tissue surface.

52. The apparatus of claim **51**, wherein the fluid film is at least one of a substantially even thickness fluid, an electrically conductive film, a thermally conductive film or a cooling film.

53. The apparatus of claim 52, wherein the fluid film is configured as a return electrode and at least one electrode is an RF electrode operated in a monopolar mode.

54. The apparatus of claim 51, wherein the fluid is electrically conductive, thermally conductive or a cooling fluid.

55. The apparatus of claim 51, wherein one of the fluid or the fluid film is configured as an RF electrode or electrically coupled to one of the at least one RF electrode or an RF power supply.

56. The apparatus of claim 51, wherein the porous portion is configured to deliver a vacuum sufficient to fixedly position at least a portion of the contact surface on the tissue surface.

57. The apparatus of claim 51, wherein the porous portion is configured to deliver a vacuum sufficient to at least partially conform at least a portion of the contact surface to the tissue surface.

58. The apparatus of claim 51, further comprising:

a fluid source coupled the tissue contact surface, wherein the fluid source includes at least one a conductive fluid,

an electrolytic solution, a saline solution, a thermally conductive fluid, a cooling fluid or a chemotherapeutic fluid.

59. The apparatus of claim 51, further comprising

a vacuum source coupled the tissue contact surface.

60. A tissue surface treatment apparatus , comprising:

a housing having a proximal end, a distal end including a tissue contacting surface having a plurality of apertures, the housing defining an interior; at least a portion of the tissue contacting surface having a lubricous coating;

an energy delivery device positionable in the housing interior, the energy delivery device including at least one electrode with a tissue penetrating distal end in substantial alignment with an aperture of the plurality of apertures, the at least one electrode configured to be advanced from the housing interior through the aperture and into a target tissue site to define an ablation volume at least partly bounded by a tissue surface;

a handpiece coupled to the housing;

an advancement device coupled to the energy delivery device, the advancement device being at least partly positionable within at least one of the housing or the handpiece, the advancement device configured to advance at least a portion of the at least one electrode from the housing interior into the target tissue site and completely withdrawal the at least one electrode into the housing interior; and

a cable coupled to one of the housing or the energy delivery device, the cable being configured to be coupled to an energy source.

61. The apparatus of claim 60, wherein the lubricous coating is one of a non-stick coating, a hydrophobic coating, a polymer coating, a fluoro-polymer coating or a silicone coating.

62. The apparatus of claim 60, wherein the lubricous coating is configured to reduce a tissue adhesion to at least a portion of the tissue contact surface.

63. A tissue surface treatment apparatus, comprising:

a housing having a proximal end, a distal end including a tissue contacting surface having a plurality of apertures, the housing defining an interior; at least a portion of the tissue contacting surface having a textured surface;

an energy delivery device positionable in the housing interior, the energy delivery device including at least one electrode with a tissue penetrating distal end in substantial alignment with an aperture of the plurality of apertures, the at least one electrode configured to be advanced from the housing interior through the aperture and into a target tissue site to define an ablation volume at least partly bounded by a tissue surface;

a handpiece coupled to the housing;

an advancement device coupled to the energy delivery device, the advancement device being at least partly positionable within at least one of the housing or the handpiece, the advancement device configured to advance at least a portion of the at least one electrode from the housing interior into the target tissue site and completely withdrawal the at least one electrode into the housing interior; and

a cable coupled to one of the housing or the energy delivery device, the cable being configured to be coupled to an energy source.

64. The apparatus of claim 63, where the textured surface increases a coefficient of friction between the tissue contact surface and the tissue surface.

65. The apparatus of claim 63, where the textured surface improves one of a stability or a lateral stability of the tissue contact surface on the tissue surface.

66. The apparatus of claim 63, wherein the tissue contacting surface is substantially circular shaped or substantially oval shaped.

67. The apparatus of claim 63, wherein the tissue contacting surface has a substantially radiused edge or a substantially tapered edge.

68. A tissue surface treatment apparatus, comprising:

a housing having a proximal end, a distal end including a tissue contacting surface having a plurality of apertures, tissue contacting surface having a substantially radiused edge or a substantially tapered edge, the housing defining an interior;

an energy delivery device positionable in the housing interior, the energy delivery device including at least one electrode with a tissue penetrating distal end in substantial alignment with an aperture of the plurality of apertures, the at least one electrode configured to be advanced from the housing interior through the aperture and into a target tissue site to define an ablation volume at least partly bounded by a tissue surface;

a handpiece coupled to the housing;

an advancement device coupled to the energy delivery device, the advancement device being at least partly positionable within at least one of the housing or the handpiece, the advancement device configured to advance at least a portion of the at least one electrode from the housing interior into the target tissue site and completely withdrawal the at least one electrode into the housing interior; and

a cable coupled to one of the housing or the energy delivery device, the cable being configured to be coupled to an energy source.

69. A tissue surface treatment apparatus, comprising:

a housing having a proximal end, a distal end including a tissue contacting surface having a plurality of apertures, the housing defining an interior;

an energy delivery device positionable in the housing interior, the energy delivery device including at least one electrode with a tissue penetrating distal end in substantial alignment with an aperture of the plurality of apertures, the at least one electrode configured to be advanced from the housing interior through the aperture and into a target tissue site to define an ablation volume at least partly bounded by a tissue surface;

a handpiece coupled to the housing;

an advancement device coupled to the energy delivery device, the advancement device being at least partly

positionable within at least one of the housing or the handpiece, the advancement device configured to advance at least a portion of the at least one electrode from the housing interior into the target tissue site and completely withdrawal the at least one electrode into the housing interior;

at least one stop coupled to one of the housing or the advancement member the stop configured to limit a movement of at least one of the advancement member or the at least one electrode; and

a cable coupled to one of the housing or the energy delivery device, the cable being configured to be coupled to an energy source.

70. The apparatus of claim 69, wherein the stop is positionable.

71. The apparatus of claim 69, wherein the stop comprises one of an indexing device or an indexing mechanism.

72. The apparatus of claim 69, wherein the movement is a linear movement with respect to a longitudinal axis of the advancement member.

73. The apparatus of claim 69, wherein the stop controls a depth of penetration of the at least one electrode.

74. A tissue surface treatment apparatus, comprising:

a housing having a proximal end, a distal end including a tissue contacting surface having a plurality of apertures, the housing defining an interior;

an energy delivery device positionable in the housing interior, the energy delivery device including at least one electrode with a tissue penetrating distal end in substantial alignment with an aperture of the plurality of apertures, the at least one electrode configured to be advanced from the housing interior through the aperture and into a target tissue site to define an ablation volume at least partly bounded by a tissue surface, the at least one electrode including an insulator positioned in a surrounding relationship to the electrode;

a handpiece coupled to the housing;

an advancement device coupled to the energy delivery device, the advancement device being at least partly positionable within at least one of the housing or the handpiece, the advancement device configured to advance at least a portion of the at least one electrode from the housing interior into the target tissue site and completely withdrawal the at least one electrode into the housing interior; and

a cable coupled to one of the housing or the energy delivery device, the cable being configured to be coupled to an energy source.

75. The apparatus of claim 74, wherein the insulator is slidably positionable over the at least one electrode to produce a selectable energy delivery surface.

76. A tissue surface treatment apparatus, comprising:

a housing having a proximal end, a distal end including a tissue contacting surface having a plurality of apertures, the housing defining an interior;

an energy delivery device positionable in the housing interior, the energy delivery device including at least one electrode with a tissue penetrating distal end in substantial alignment with an aperture of the plurality of apertures, the at least one electrode configured to be advanced from the housing interior through the aperture and into a target tissue site to define an ablation volume at least partly bounded by a tissue surface;

a handpiece coupled to the housing;

an advancement device coupled to the energy delivery device, the advancement device being at least partly positionable within at least one of the housing or the handpiece, the advancement device configured to advance at least a portion of the at least one electrode from the housing interior into the target tissue site and completely withdrawal the at least one electrode into the housing interior; and

a sensor coupled to at least one of the housing, the tissue contact surface, the energy delivery device, the at least one electrode or the advancement member; and

a cable coupled to one of the housing or the energy delivery device, the cable being configured to be coupled to an energy source.

77. The apparatus of claim 76, wherein the sensor is a thermal sensor, a thermocouple, a pressure sensor, a force sensor, a strain gauge, a positional sensor, an LVDT, an optical sensor, a current sensor, voltage sensor or a pH sensor.

78. The apparatus of claim 76, the sensor is configured to sense one of an electrode position, an electrode deployment depth or a fully withdrawn position of the electrode.

79. The apparatus of claim 78, wherein the sensor is one an LVDT, a resister, a resistance strip or a potentiometer

80. The apparatus of **76**, further comprising:

feedback control resources coupled to at least one of the sensor, the first RF electrode or a fluid delivery device coupled to at least one infusion port positioned on one of the tissue contact surface or the energy delivery device.

81. The apparatus of claim 80, wherein the feedback control resources includes at least one of a microprocessor, a controller, a software module, a software program set forth in a tangible media, a power control circuit, a voltage and current monitor, a user interface or a display.

82. The apparatus of claim 80, wherein the feedback control resources are configured to control process variables to reduce one of a tissue desiccation in proximity to the energy delivery device or an impedance rise.

83. The apparatus of claim 82, wherein the process variables include at least one of a power level, a duty cycle, an energy delivery, an RF energy delivery, a rate of RF energy delivery to the tissue site, a fluid delivery, a fluid flow rate or a fluid pressure.

84. A tissue surface treatment apparatus, comprising:

a housing having a proximal end, a distal end including a tissue contacting surface having a plurality of apertures, the housing defining an interior;

an energy delivery device positionable in the housing interior, the energy delivery device including at least one electrode with a tissue penetrating distal end in substantial alignment with an aperture of the plurality of apertures, the at least one electrode configured to be advanced from the housing interior through the aperture and into a target tissue site to define an ablation volume at least partly bounded by a tissue surface;

a handpiece coupled to the housing;

an advancement device coupled to the energy delivery device, the advancement device being at least partly positionable within at least one of the housing or the handpiece, the advancement device configured to advance at least a portion of the at least one electrode from the housing interior into the target tissue site and completely withdrawal the at least one electrode into the housing interior;

at least one infusion port coupled to at least one of the tissue contact surface, the energy delivery device, or the at least one electrode; and

a cable coupled to one of the housing or the energy delivery device, the cable being configured to be coupled to an energy source.

85. The apparatus of claim 84, wherein the at least one infusion port includes a plurality of infusion ports.

86. A tissue surface treatment apparatus, comprising:

a housing having a proximal end, a distal end including a tissue contacting surface, the housing defining an interior;

an fluid delivery device positionable in the housing interior, the fluid delivery device including at least one hollow non conducting infusion member with at least one infusion aperture and a tissue penetrating distal end, the at least one infusion member configured to be advanced from the housing interior and into a target tissue site to infuse a fluid into tissue and define a tissue infusion volume, the fluid delivery device configured to be coupled to a fluid source;

a handpiece coupled to the housing;

an advancement device coupled to the fluid delivery device, the advancement device being at least partly positionable within at least one of the housing or the handpiece, the advancement device configured to advance at least a portion of the at least one infusion member from the housing interior into the target tissue site and completely withdrawal the at least one infusion member into the housing interior; and

a conductor coupled to at least one of the fluid delivery device or the infusion member, the conductor being configured to be coupled to an energy source.

87. A tissue surface treatment apparatus, comprising:

a housing having a proximal end, a distal end including a tissue contacting surface having a plurality of apertures and a tissue access port, the housing defining an interior;

an energy delivery device positionable in the housing interior, the energy delivery device including at least one electrode with a tissue penetrating distal end in substantial alignment with an aperture of the plurality of apertures, the at least one electrode configured to be advanced from the housing interior through the aperture and into a target tissue site to define an ablation volume at least partly bounded by a tissue surface;

a handpiece coupled to the housing;

an advancement device coupled to the energy delivery device, the advancement device being at least partly positionable within at least one of the housing or the handpiece, the advancement device configured to advance at least a portion of the at least one electrode from the housing interior into the target tissue site and completely withdrawal the at least one electrode into the housing interior; and

a cable coupled to one of the housing or the energy delivery device, the cable being configured to be coupled to an energy source.

88. The apparatus of claim 87, wherein the tissue access port includes a tissue anchoring member or a helical member.

89. The apparatus of claim 87, wherein the tissue access port is adapted to provide access to the tissue surface by a surgical instrument, a forceps, a biopsy device or a catheter device.

90. A tissue surface treatment apparatus, comprising:

a housing means having a proximal end, a distal end including a tissue contacting surface means having a plurality of apertures means, the housing means defining an interior;

an energy delivery device means positionable in the housing means interior, the energy delivery device means including at least one electrode means with a tissue penetrating distal end in substantial alignment with an aperture means of the plurality of apertures means, the at least one electrode means configured to be advanced from the housing means interior through the aperture means and into a target tissue site to define an ablation volume at least partly bounded by a tissue surface;

a handpiece means coupled to the housing means;

an advancement device means coupled to the energy delivery device means, the advancement device means being at least partly positionable within at least one of the housing means or the handpiece means, the advancement device means configured to advance at least a portion of the at least one electrode means from the housing means interior into the target tissue site and completely withdrawal the at least one electrode means into the housing means interior; and

a cable means coupled to one of the housing means or the energy delivery device means, the cable means being configured to be coupled to an energy source means.

* * * * *