Filed on behalf of: Serendia, LLC

UNITED STATES PATENT AND TRADEMARK OFFICE

BEFORE THE PATENT TRIAL AND APPEAL BOARD

JEISYS MEDICAL INC.,
Petitioner,

v.

SERENDIA, LLC,
Patent Owner.

Case IPR2024-00463
Patent 10,869,812

DECLARATION OF PETER CROSBY
IN SUPPORT OF
PATENT OWNER'S RESPONSE

PUBLIC VERSION - REDACTED

Serendia, LLC
Exhibit 2147
Jeisys v.Serendia
IPR2024-00463

Table of Contents

I. Introduction and Qualifications 3

II. Summary Of Materials Reviewed And Considered 7

III. LEGAL STANDARDS..... 10

A. Claim Construction 10
B. Anticipation 13
C. Obviousness 13

IV. LEVEL OF SKILL IN THE ART 18

V. THE '812 PATENT 18

A. Overview of the '812 Patent 18
B. Overview of the Prosecution of the '812 Patent..... 22
C. Priority date of the Claims of the '812 Patent 23

VI. Serendia's Sylfirm X Patented Product Versus the Prior Art..... 24

VII. CLAIM CONSTRUCTION 31

1. Motor . . . "to cause the plurality of the needles to extend a desired distance from the releasably couplable deployable needle module end surface" / "to extend the plurality of needles a desired distance from the releasably couplable deployable needle assembly end surface" 32

VIII. PRIOR ART 37

A. U.S. Pat. No. 8,608,737 to Mehta 37
B. KR20-0441552 ("Lee") 44
C. Na '848 46
D. WO 2008/005477 ("Livneh") 47

IX. NONE OF THE GROUNDS IN THE PETITION SHOW THAT CLAIMS OF THE '812 PATENT ARE UNPATENTABLE 50

A. GROUND I – Claims 2-5, 8, and 13-16 are not anticipated by Mehta 50

B. GROUND II – Claims 2-6, 8 and 13-16 are not obvious in view of Mehta and the knowledge of a POSITA 57
1. Mehta does not teach or suggest the claimed "desired distance" limitation of claims 2-6, 8, and 13-16 57
2. Mehta does not teach or suggest the embedded LED to illuminate the needle module or needle assembly limitations of claims 4 and 17, respectively 61
3. Mehta does not teach or suggest the translucent section of claim 5 65
C. GROUND III– Claims 4-5 and 17 are not obvious over Mehta in view of Na '848 and the knowledge of a POSITA..... 68
D. GROUND IV – Claims 2-3, 6, 8, or 13-16 are not obvious in view of Mehta and Lee 71
E. GROUND V – Claims 4-5 and 14-15 are not obvious in view of Mehta, Lee, Na '848 and the knowledge of a POSITA 79
F. GROUND VI – Claims 9 and 18 are not obvious in view of Mehta, Livneh, and the knowledge of a POSITA 79

X. OBJECTIVE INDICIA OF SECONDARY CONSIDERATIONS 86

A. The Sylfirm X practices the claims of the '812 Patent..... 86
1. '812 Patent, Claim 1 86
2. '812 Patent, Claim 2 92
3. '812 Patent, Claim 12 93
4. '812 Patent, Claim 13 97
B. The Claims at Issue Of The '812 Patent have achieved commercial success 98
C. The Inventions of the Claims of '812 Patent have received industry praise..... 100

XI. CONCLUSION 101

I. Introduction and Qualifications

1. I have been retained by Serendia, LLC ("Patent Owner") to provide my opinion concerning the validity of U.S. Patent No. 10,869,812 (the "'812 Patent") (Ex. 1001).

2. I have over 45 years of experience in the medical device industry. I earned my Bachelor's degree in Electrical Engineering in 1974 and my Master's degree in Engineering Science in 1976, both from the University of Melbourne, Australia. My M.Eng.Sci. degree was in Biomedical Engineering, and I took courses and received training in advanced engineering, anatomy, and physiology as part of my M.Eng.Sci. work.

3. I am a named inventor of over 50 issued U.S. patents and public applications (and foreign equivalents). Most of my patents are in the general field of medical devices. Some of my patents focus on RF ablation.

4. During my career I have worked as an engineer in Research and Development responsible for developing medical devices and have run the Research and Development function for several medical device companies. I spent approximately 15 years in product research and development, including participation in design, engineering, manufacturing ramp-up, clinical trial design and execution, and regulatory submissions. Since then, I have spent most of my career in general management.

5. I have served as the Chief Executive Officer of six medical device companies in four countries. In my career, I have brought over a dozen products from concept to market release, through Research and Development, manufacturing introduction, and clinical trials and regulatory approval in the United States as well as other markets worldwide, followed by development of a sales force and sales growth. I am keenly aware of the work and investment required to create a successful company in the medical device industry.

6. I have worked on the clinical trials and regulatory submissions for multiple products, starting in 1984 when I was the primary author of the Pre-Market Approval Application (PMAA) for Cochlear (a multi-channel implantable hearing prosthesis). I have developed clinical trial protocols, analyzed clinical data, and written or co-authored applications to the FDA for 510(k) clearance and Pre-Market Approval (PMA) in multiple fields.

7. I have direct experience in radio frequency (RF) ablation and coagulation of tissue. As part of my work as Director of the Northern Region Biomedical Engineering Service, I was responsible for selection, purchasing, maintenance, and training on several types of RF electrosurgery equipment.

8. As part of my work at NeoVision, I co-developed equipment for RF ablation and cauterization of breast cancer tissue. I am an inventor on a patent in

this area – U.S. Patent No. 6,106,524 "Methods and apparatus for therapeutic cauterization of predetermined volumes of biological tissue."

9. From July 2009 through October 2017, I was the CEO and Director of Mainstay Medical International PLC, a medical device company in the field of neurostimulation therapy for chronic lower back pain. I founded Mainstay and recruited key team members, designed the Feasibility Clinical Study and the clinical trial needed for marketing approval, and started the commercialization of a product in 2017. One aspect of therapy for treatment of chronic lower back pain is RF ablation of nerve tissue, and I am an inventor on a patent in this field – U.S. Patent No. 10,661,078 "Modular stimulator for treatment of back pain, implantable RF ablation system and methods of use."

10. In 2022 I was engaged as an expert in a product liability lawsuit involving alleged injury during a plastic surgery procedure using RF electrosurgery.[1]

11. I also served as an expert for Patent Owner in *Certain Dermatological Treatment Devices and Components Thereof*, Inv. No. 337-TA-1356 (the "1356 Investigation") on a number of issues, including the validity and practice of several

[1] Case No. 21STCV30687 in the Superior Court for Los Angeles County, California.

of the patents at issue in that case. One of the patents I provided opinions on was the '536 Patent.

12. I have provided declarations in other cases before the PTAB, including on behalf of Petitioners in Abbott Laboratories et al. v. Miracor Medical S.A, IPR2025-00096, and for the Patent Owner in Boston Scientific Corp. V. Nevro Corp., IPR2022-00509 and IPR2022-00510.

13. I have worked in several clinical specialties, including cardiology and cardiac surgery, clinical pathology, medical software, otolaryngology, ophthalmology, intensive care, orthopedics, pain management, gastroenterology, medical imaging, and clinical education and training.

14. I currently work as a consultant, board member, and expert witness through my consulting business, Biomedical Business Resources, LLC. I am the Chairman of the Board of two companies and a member of the Board of Directors of one other company.

15. I have been responsible for development and maintenance of the patent portfolios of several companies. I have presented to USPTO patent examiners and to the Appeals Board of the European Patent Office, and I have previously submitted a declaration to the PTAB in defense of an IPR. I have also testified in the International Trade Commission.

16. My resume is attached as Ex. 2136 (*Curriculum Vitae* of Peter Crosby).

II. Summary Of Materials Reviewed And Considered

17. All of the opinions contained in this Declaration are based on the documents I reviewed and my knowledge and professional judgment. In forming the opinions expressed in this Declaration, while drawing on my experience, I reviewed the papers filed in connection with the Petition, including the Petition itself and subsequent filings by both parties, as well as the Board's institution decision and the following documents:

Exhibit	Description
1001	U.S. Patent No. 10,869,812
1002	File History for U.S. Patent No. 10,869,812 ("'812 Patent File History")
1003	Declaration of Dany Berube
1006	U.S. Patent No. 8,608,737 ("Mehta")
1009	Certified Translation of Korean Registered Utility Model KR20–0441552 to Lee et al. ("Lee")
1011	U.S. Patent No. 8,540,705 ("Mehta 705")
2037	Brochure: Sylfirm X Dual Wave RF Microneedling System (2022)
2038	ViOL Patent List (Dec. 1, 2023), https://violmedical.com/about/patent
2039	Sylfirm X Video
2040	Transcript of Exhibit 2039 – Sylfirm X Video

Exhibit	Description
2062	Presentation: Sylfirm X Clinical Training (2021) (PROTECTIVE ORDER MATERIAL)
2066	Martin Braun, Sylfirm X Revolutionises [sic] the Clinical Applications of RF Microneedling, 12 PRIME INT'L J. AESTHETIC ANTI-AGEING [SIC] MED. 50 (2022)
2067	World-Class Product of Korea 2020, Certificate to ViOL Co., Ltd., dated December 9, 2020 ("Sylfirm X Award")
2079	Sylfirm X (product information), ViOL (2022), https//viol medical.com/for_providers/product?idx= 10 (last visited Feb. 25, 2023)
2083	ViOL, Sylfirm X User Manual (VO-UM-SFX-03), revised April 20, 2022
2084	Sylfirm X, Device Description (PROTECTIVE ORDER MATERIAL)
2086	Sylfirm X Product Photographs
2097	Sylfirm X Introduction Video 1
2098	Transcript - Sylfirm X Introduction Video 1
2114	File History for U.S. Patent No. 9,320,536 ("'536 Patent File History")
2115	U.S. Patent No. 6,890,319 B1 ("Crocker")
2119	U.S. Patent. No. 6,277,116 B1 ("Utely")
2120	U.S. Patent Application Publication No. 2002/0120261 A1 ("Morris '261")
2122	Cartessa Aesthetics, *Innovations in RF Microneedling: A Closer Look at VirtueRF*, Observations Aesthetics, Issue No. 1 (June 2021)
2125	Hearing transcript, *In re Certain Dermatological Treatment Devices & Components Thereof*, No. 337-TA-1356 (U.S.I.T.C.), held November 6, 2023 and December 12, 2023 (Jean Woloszko testimony excerpts) ("Woloszko Hr'g Tr.")

Exhibit	Description
2127	Sylfirm X RF Inspection Report of Peter Crosby
2128	Deposition transcript of Jongju Na, *In re Certain Dermatological Treatment Devices & Components Thereof*, No. 337-TA-1356 (U.S.I.T.C.), taken July 25, 2023 (excerpts)
2130	Sylfirm X Product Photographs
2136	*Curriculum Vitae* of Peter Crosby
2141	Thomas Declaration
2144	Statutory Disclaimer
2148	Deposition transcript of Jean Woloszko, M.D., Ph.D., *In re Certain Dermatological Treatment Devices & Components Thereof*, No. 337-TA-1356 (U.S.I.T.C.), taken September 15, 2023 (excerpts)
2149	Primāeva Medical, Inc., Miratone Brochure (2009) (Bates nos. Berube-0000004-0000007)
2150	Primāeva Medical, Inc., Primāeva Miratone System User Manual (Bates nos. Berube-0001098–0001136)
2151	Primāeva Medical, Inc., Miratone System Instructions for Use (Bates nos. Berube-0001071–0001097)
2152	VCF Staff, *Syneron Medical Buying Primaeva Medical*, VENTURE CAP. J. (Oct. 16, 2009), https://www.venturecapitaljournal.com/syneron-medical-buying-primaeva-medical/
2153	Primāeva Medical, Inc., K082391 510(k) Summary (Aug. 24, 2009) and letter from Mark N. Melkerson, Department of Health & Human Services, Food & Drug Administration to Brian Grigsby, Primāeva Medical, Inc. (Sept. 1, 2009), https://www.accessdata.fda.gov/cdrh_docs/pdf8/K082391.pdf
2154	Deposition transcript of Jean Woloszko, M.D., Ph.D., *Jeisys Medical Inc. v. Serendia, LLC,* IPR2024-00383, taken October 24, 2024

18. My opinions are also guided by my appreciation of how a person of ordinary skill in the art would have understood the claims of the '812 Patent.

III. LEGAL STANDARDS

19. I am not an attorney, and counsel for Patent Owner has instructed me as to the applicable legal standards relevant to my analysis in this declaration.

A. Claim Construction

20. I have been informed by counsel that claims should be given their ordinary and customary meaning as understood by a person of ordinary skill in the art ("POSITA") in the context of the entire patent.

21. I understand that in some instances, the plain and ordinary meaning of claim language is readily apparent, and claim construction will involve little more than the application of the widely-accepted meaning of commonly understood words. However, I also understand that in other instances, claim terms have specialized meanings, and it is necessary to determine what a POSITA would have understood particular claim language to mean by analyzing the words of the claims themselves, the remainder of the specification, the prosecution history, and potentially extrinsic evidence concerning relevant scientific principles, as well as the meaning of technical terms, and the state of the art.

22. I understand that the claims themselves provide substantial guidance regarding the meaning of particular claim language, and the context in which a term is used in the asserted claim can be highly instructive. Similarly, I understand

that other claims of the patent at issue, whether or not they have been asserted, may show the scope and meaning of particular claim language.

23. I understand the specification is the single best guide to the meaning of a disputed term when the meaning of a particular claim term in the context of the patent's claims is unclear. I also understand the construction that stays true to the claim language and most naturally aligns with the patent's description of the invention will be, in the end, the correct construction. I also understand that, generally, the specific examples or embodiments discussed in the specification are not to be read into the claims as limitations.

24. I understand that the patent's prosecution history may also inform the meaning of claim language, even though the prosecution history often lacks the clarity of the specification and thus is less useful for claim construction purposes. I have been informed by counsel that the prosecution history includes the entire record of the patent examination proceedings before the U.S. Patent and Trademark Office ("USPTO"), including cited prior art references. I understand the prosecution history may reveal how the inventor understood the invention and whether the inventor limited the invention in the course of prosecution, making the claim scope narrower than it would otherwise be.

25. I understand that extrinsic evidence may be used to construe claim language if the intrinsic evidence is inadequate to determine the meaning of

particular claim language. It is my understanding that extrinsic evidence may help explain the relevant art and consists of all evidence external to the patent and prosecution history, including expert and inventor testimony, dictionaries, and learned treatises.

26. It is also my understanding that when assessing expert testimony, it should be disregarded when it is conclusory or clearly at odds with the claim construction mandated by the claims themselves, the written description, and the prosecution history, in other words, with the written record of the patent. I also understand that expert testimony should only be given weight with respect to the particular claim language in dispute, if it identifies what the accepted meaning in the field is to a POSITA. I understand that testimony that simply recites how each expert would construe the term should receive little or no weight.

27. I understand that extrinsic evidence is less reliable than intrinsic evidence and is unlikely to result in a reliable interpretation of patent claim scope unless considered in the context of the intrinsic evidence. I also understand that extrinsic evidence is considered last, if at all, because in cases where the public record unambiguously describes the scope of the patented invention, that ends the inquiry.

B. Anticipation

28. I understand that Respondents must prove—on a claim-by-claim basis—that specific claims of the Asserted Patents are invalid.

29. I am informed that for a claim to be anticipated, every limitation of the claimed invention must be found in a single prior art reference, either expressly or inherently, arranged as in the claim. I understand that the words in a reference are to be construed in light of the relevant surrounding circumstances in each case, and a reference in any event is good only for that which it discloses. I understand that a reference cannot anticipate if it is ambiguous as to whether it disclosed the respective claim limitations.

30. I further understand that anticipation cannot be established by multiple, distinct teachings that the artisan might combine to achieve the claimed invention. Additionally, I understand that when the reference does not disclose that the drawings are to scale and is silent as to dimensions, an accused infringer cannot infer dimensions to demonstrate invalidity.

31. I understand that an element may be inherently disclosed only if it is necessarily present, not merely probably or possibly present, in the prior art.

C. Obviousness

32. I understand that even if a patent is not anticipated, it is still invalid if it is shown by clear and convincing evidence that the differences between the

claimed subject matter and the prior art are such that the subject matter as a whole would have been obvious to a POSITA at the time the invention was made. I understand that, while obviousness can be based on one or more pieces of prior art. it is not sufficient that a collection of prior art references recite the various elements of a challenged patent claim. Rather, as I understand it, it must have been obvious to combine those elements in a manner that is consistent with their arrangement or use in the challenged claims.

33. It is my understanding that obviousness must be determined as of the date of the invention (i.e., the effective filing date or priority date of the patent). Thus, in considering the reason or motivation to combine references, it is essential to avoid using hindsight. I also understand that the problem that would have motivated a POSITA at the time that the invention was made can be any problem that would have motivated a particular solution, not the specific problem solved by the invention. I understand that defining the problem in terms of its solution reveals improper hindsight in the selection of the prior art relevant to obviousness. Further, I understand that an overly narrow statement of the problem can represent a form of hindsight, because an inventive contribution may lie in defining the problem in a new, revelatory way. Similarly, I understand that an assertion that a person of ordinary skill could combine the references, rather than that they would have been motivated to do so, is an impermissible form of hindsight.

34. I further understand that a POSITA is a hypothetical person who is presumed to have known the relevant art at the time the invention was made. I understand that the condition "at the time the invention was made" is imposed to rule out impermissible hindsight. I also understand that an expert is to analyze the prior art from the perspective of a POSITA and not simply to provide his/her own personal conclusions.

35. I also understand that an obviousness determination includes several factual inquiries, including (1) determining the scope and content of the prior art; (2) ascertaining the differences between the claimed invention and the prior art; (3) resolving the level of ordinary skill in the pertinent art; and (4) taking into consideration any objective indicia of non-obviousness.

36. I understand that objective indicia of non-obviousness may include (1) a long felt but unsolved need that was satisfied by the claimed invention; (2) commercial success attributable to the claimed invention; (3) unexpected results achieved by the claimed invention; (4) praise by those in the field of the claimed invention; (5) taking of licenses under the patent by others for reasons related to the alleged non-obviousness of the claimed invention; and (6) evidence that competitors in the marketplace are copying the invention instead of using the prior art. I also understand that there must be a relationship, or nexus, between any such objective indicia and the claimed invention, i.e., objective evidence of non-

obviousness must be attributable to the claimed invention. I further understand that near simultaneous invention by two or more equally talented inventors working independently, may or may not be an indication of obviousness when considered in light of all the circumstances.

37. I am informed that the analysis of the reason to combine prior art should be explicit. Additionally, I understand that an obviousness analysis must include articulated reasoning with rational underpinnings to support the conclusion of obviousness. I understand that providing a full explanation of the reason to combine the references and the reasonable expectation of success is a necessary component of the obviousness inquiry, as inventions in most, if not all, instances rely upon building blocks long since uncovered, and claimed discoveries almost of necessity will be combinations of what, in some sense, is already known. However, I understand that conclusory statements fail to adequately explain why a person of ordinary skill would have a motivation to combine the potential prior art references.

38. I am informed that common sense, common wisdom, and common knowledge may be used to support a reason to combine, so long as the use of common sense in the analysis is explained with sufficient reasoning. But I understand that common sense can only be used to supply a limitation missing from the prior art where the technology is unusually simple and straightforward.

39. I am also informed that evidence suggesting reasons to combine cannot be viewed in a vacuum apart from evidence suggesting reasons not to combine. In analyzing motivation, both advantages and disadvantages must be considered. Teaching away, for example, is a statement in the prior art that either (i) discourages one from following the path of the claimed invention, or (ii) encourages one to follow a path that diverges from the path of the claimed invention. The concept of teaching away bears directly on whether there was a reason to combine prior art. Known disadvantages in old devices which would naturally discourage a search for new inventions may also be taken into account in determining obviousness.

40. I understand that to demonstrate that a patent claim is obvious in view of a combination of references, a challenger must show that a POSITA would have been motivated to combine the references. Moreover, I understand that a POSITA must have a reasonable expectation of success when combining and/or modifying the cited references for a proper determination of obviousness.

41. It is further my understanding that to be proper for use in an obviousness analysis, a reference must be analogous art to the claimed invention. Accordingly, I understand that under the correct analysis, any need or problem known in the field of endeavor at the time of the invention and addressed by the

claimed invention can provide a reason for combining the elements in the manner claimed.

IV. LEVEL OF SKILL IN THE ART

42. It is my opinion that a person of ordinary skill in the art ("POSITA") for the '812 Patent would have (1) 7-10 years of experience with developing and/or using treatment systems for delivery of electromagnetic radiation energy to skin or other tissues, and (2) a related graduate engineering degree or M.D. A POSITA may have worked as part of a multidisciplinary team and drawn upon not only his or her own skills, but also would have taken advantage of certain specialized skills of others on the team when solving a technical problem. On my opinion, additional education could substitute for professional experience and vice versa. The term "electromagnetic radiation energy" encompasses delivering electric current through electrodes inserted into tissue.

43. I understand the Petitioner applies the same level of skill.

V. THE '812 PATENT

A. Overview of the '812 Patent

44. The '812 Patent generally relates to dermatological treatment to improve the appearance of skin. Part of this dermatological treatment involves inserting microneedles into the skin and applying radiofrequency ("RF") signals to the skin. This treatment is generally known as "RF microneedling." This

dermatological treatment apparatus is described in connection with Figures 9-11 of the '812 Patent.

45. An embodiment of the '812 Patent shown in Figure 9A (below) includes "a dermatological treatment architecture (DTA) 900" with "a signal generation and control module (SGC) 910, a handle module 920, and an actuator module 930." Ex. 1001 ('812 Patent), 9:40-44.

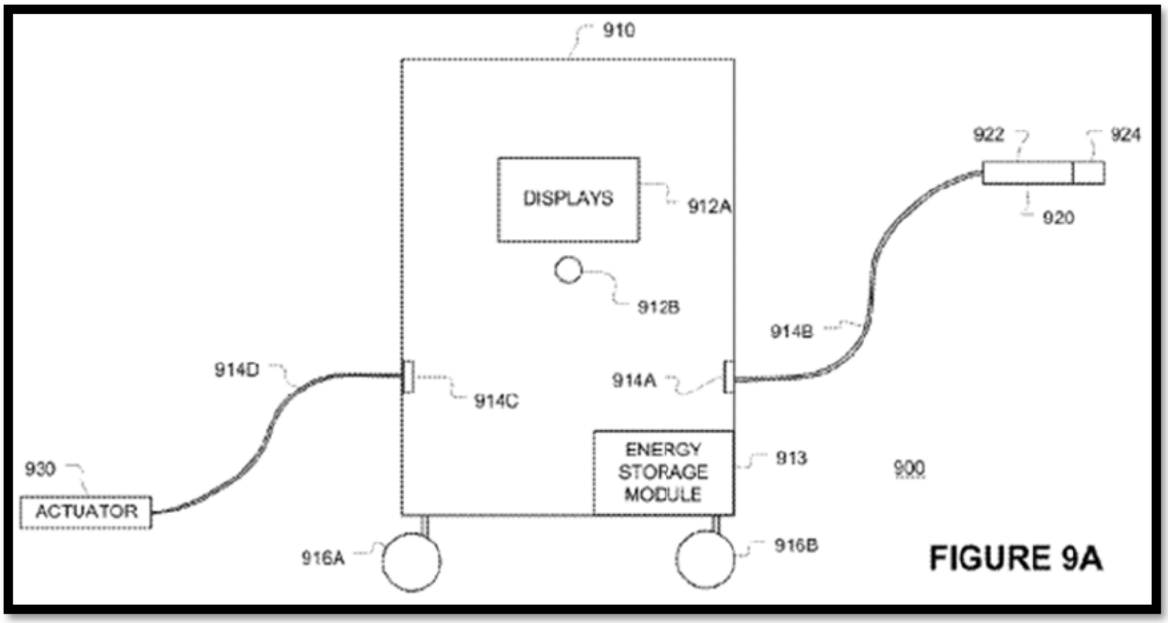

46. As shown in Figure 9A (copied above) and in Figures 9C and 9D (copied below), the "handle module 920 may include a deployable needle module 924 and a motor and LED module 922. *Id.*, 9:44-464.

47. The '812 Patent also explains that "The CPU module **911** may include a radio frequency (RF) signal generator (RFSG) module **911A** [and] a needle deployment motor controller (NDMC) module **911B** . . . ." *Id.*, 10:21-24. "The

NDMC 911B may control the deployment of one or more needles 924A of the deployable needle module 924 [] based one or more user selected parameters," which include "the depth" of needle insertion. *Id.*, 10:21-24, 10:32-37. The motor and LED module (MLM) 922 can include "one or more motors 922A, longitudinally extendable drive arm 922B, drive shaft 922C, outer casing 922D, signal interface 922E," shown Figures 9C and 9D (below). *Id.*, 10:58-60, 11:6-9, 11:15-27, Figs. 9C, 9D. The drive shaft 922C may be moved to "deploy and retract one or more needles 924A when the MLM 922 is operatively coupled to the DNM 924" such that "the motor(s) 922A may enable precise needle extension (effective depth) control." *Id.*, 11:15-27, 14:3-4, 14:24-26, Figs. 9C, 9D. Accordingly, "needle deployment" "via one or more motors 922A" can be controlled by the user. *Id.*, 10:52-60. The needles 924A in Figure 9C are retracted, and deployed in Figure 9D. *Id.*,10:58-60, 11:6-9.

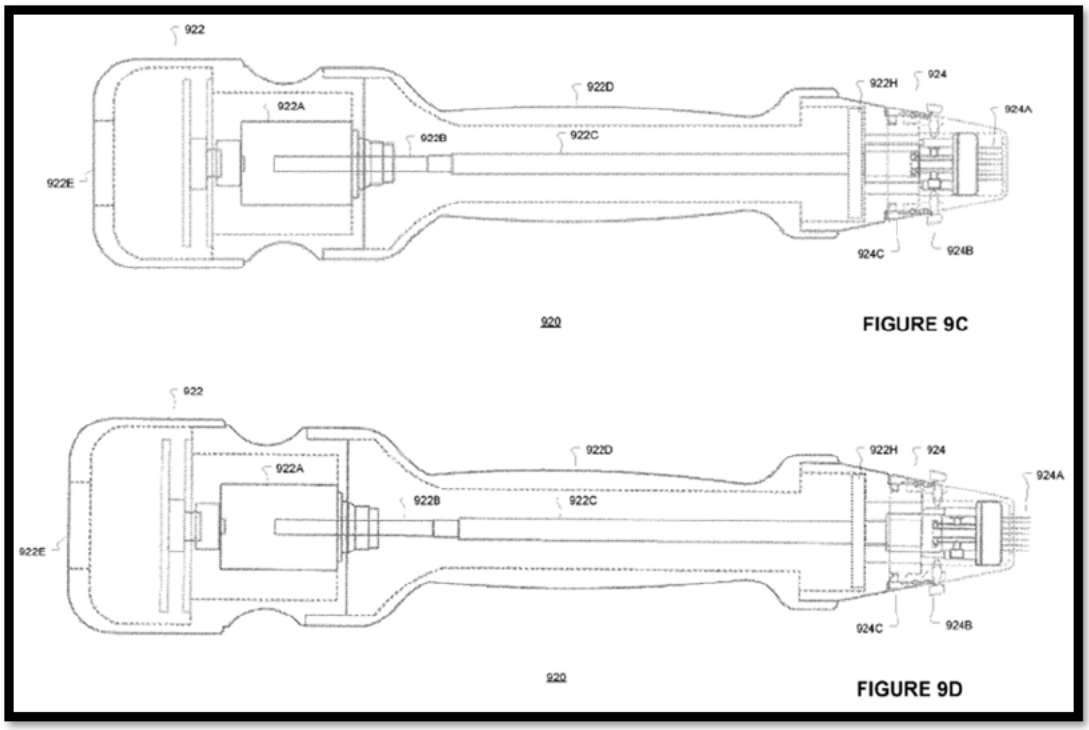

48. The "desired depth of needle 924 penetration within tissue" can be achieved "based on the operational parameters" selected by the user. *Id.*, 14:14-20, 14:28-34. For example, Figure 12 (reproduced below) is a flow diagram of the algorithm employed by DTA 900. *Id.*,13:45-46. The DTA 900 can enable a user to "select a variety of operational parameters to deliver a desired combination of electrical, light (photonic), and mechanical (needle) therapy to dermatological tissue." *Id.*, 13:47-51. One such parameter is the needle deployment depth. *Id.*, 13:65. Further, the DTA 900 of Figure 12 shows that in two operational modes (blend and coagulation) one of the steps 934C, 936C involves selecting the needle deployment depth. *Id.*, 13:45-46, 13:63-66, 14:21-24. Thus, the distance that the needles extend is determined based on a user-selected depth that is input into an

algorithm (*i.e.*, software) that controls a motor, providing precise control over the needle insertion depth. *Id.*; *see also id.,* 9:65-10:5, 10:21-24, 10:32-36, 11:24-28, 14:3-6, 14:24-26.

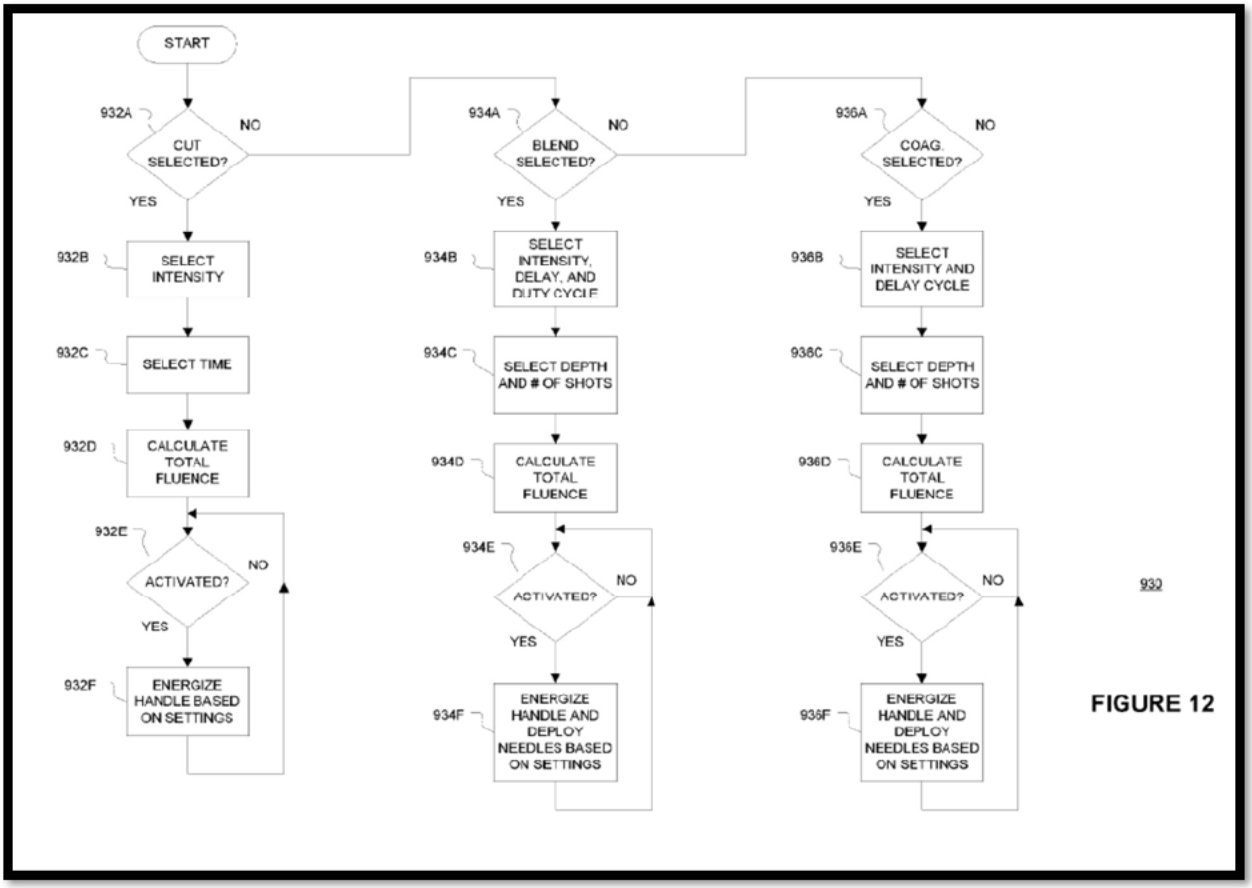

FIGURE 12

B. Overview of the Prosecution of the '812 Patent

49. The '812 Patent was filed on October 3, 2017, and issued December 22, 2020. Ex. 1001, 1. It is a continuation of the '774 Patent, which in turn is a continuation of the '536 Patent. The Patent Owner agrees that the proper priority date for the claims of the '536 Patent is March 3, 2011. Petitioner has also challenged the '774 and '536 Patents.

50. During prosecution, the Examiner rejected the then-pending claims over WO 2005, 096979 AI ("Manstein") and KR 10-2011-00002210 ("Yang") (Ex. 1002, 579-580), and issued a double patenting rejection in view of the '536 Patent. *Id*., 580-582. In response, the Applicant initiated several interviews with the Examiner, amended the claims to require that the electrical contacts be extendable, and filed a terminal disclaimer. *Id*., 604-607. 614-622, 625-626. After the Applicant corrected certain deficiencies with the terminal disclaimer, the Examiner allowed the claims. *Id*., 646-651, 682, 692-693.

C. Priority date of the Claims of the '812 Patent

51. I understand Petitioner contends that the '812 Patent is entitled to a priority date of March 3, 2011, and I agree.

52. The application that became the '812 Patent claims priority to U.S. Prov. App. No. 61/449,080, filed on March 3, 2011. The '812 Patent also claims priority to KR App. No. 10-2008-0076993 (filed on Aug. 6, 2008), priority thereto claimed in PCT App. No. PCT/US2008/074131 (filed on Aug. 22, 2008), which published as WO 2010/016848 and is the PCT application for the national stage entry of U.S. Pat. App. No. 13/060,274 (filed on Aug. 22, 2008), which became U.S. Pat. No. 8,979,912, priority thereto claimed in PCT App. No PCT/KR/2012/001335 (filed on Feb. 22, 2012), which the application that became the '536 Patent claims priority to. Below is a figure showing the priority claims for

the patents in the family of the '536 Patent. The '812 Patent is a continuation of '774 Patent, which is a continuation of the '536 Patent.

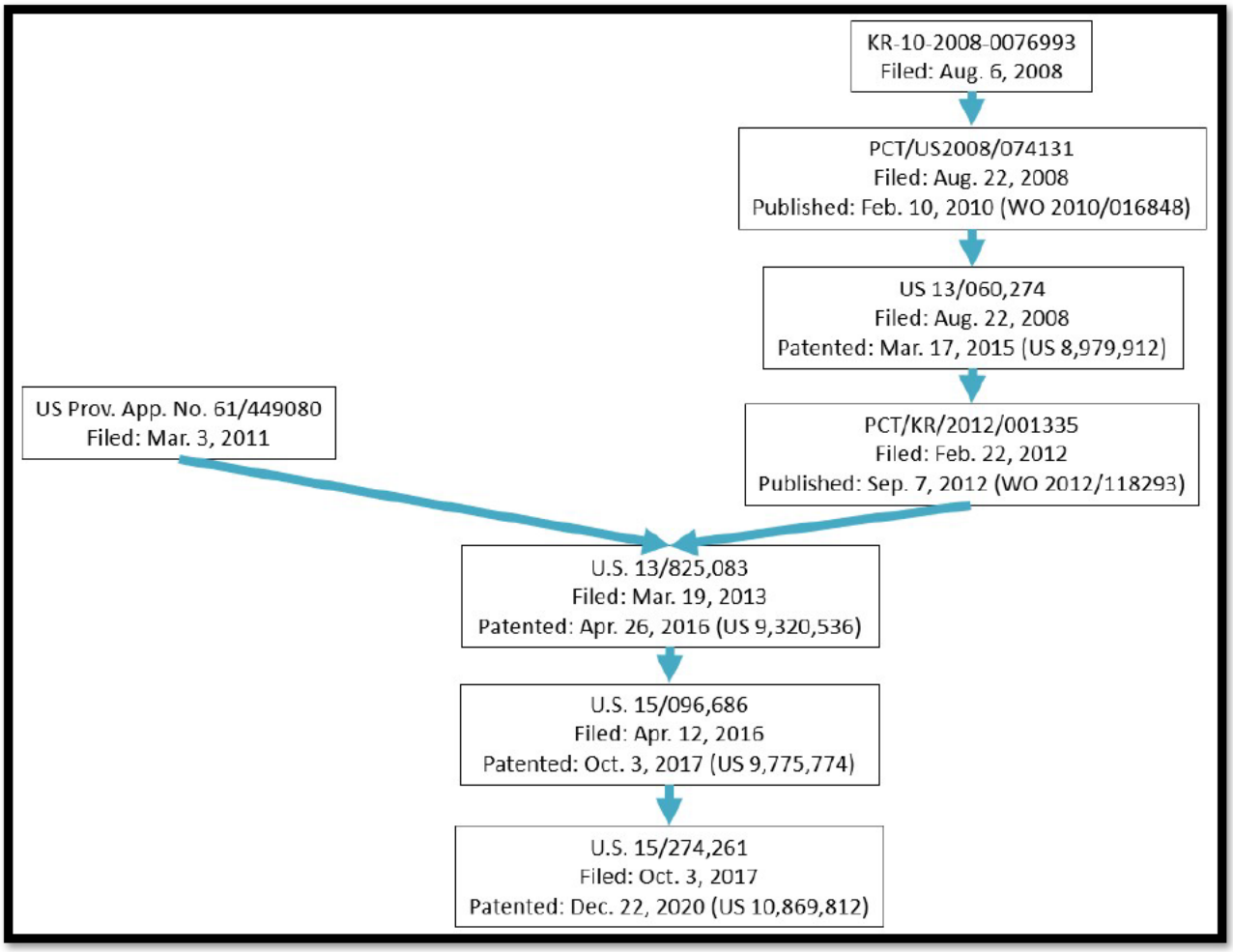

53. The '812 Patent claims have written description support in U.S. Prov. App. No. 61/449,080, filed on March 3, 2011. I understand that Petitioner and its expert do not dispute as much.

VI. Serendia's Sylfirm X Patented Product Versus the Prior Art

54. As I explain in detail below, as an expert for Patent Owner in the 1356 ITC Investigation, I personally inspected, reviewed, and analyzed the Sylfirm X, as well as many documents for the product such as the user manual, brochures and

marketing and advertising documents, instructional videos, the 510k application, and others. During the 1356 ITC investigation, Patent Owner relied on the Sylfirm X to establish a domestic industry, which I understand is a requirement of a Section 337 investigation under which a complainant like Patent Owner must show it made significant investments in the United States pertaining to articles protected by the asserted patents. 19 U.S. §1337(a). I was present for the full evidentiary hearing at the 1356 ITC Investigation, and none of the Respondents, including Petitioner here, presented any evidence to the contrary.

55. Just like the embodiments claimed in the '812 Patent, the Sylfirm X includes a handpiece with a removable needle assembly that includes extendable needles. Below are shown photographs of the Sylfirm X (Ex. 2130-002 and Ex. 2086-010) compared to Figures 9C and 9D of the '812 Patent, which correspond to the claimed embodiment. As the photographs and Figures show, the needles of the Sylfirm X can be retracted (top two illustrations) or extended (bottom two illustrations) just as in the claimed invention of the '812 Patent.

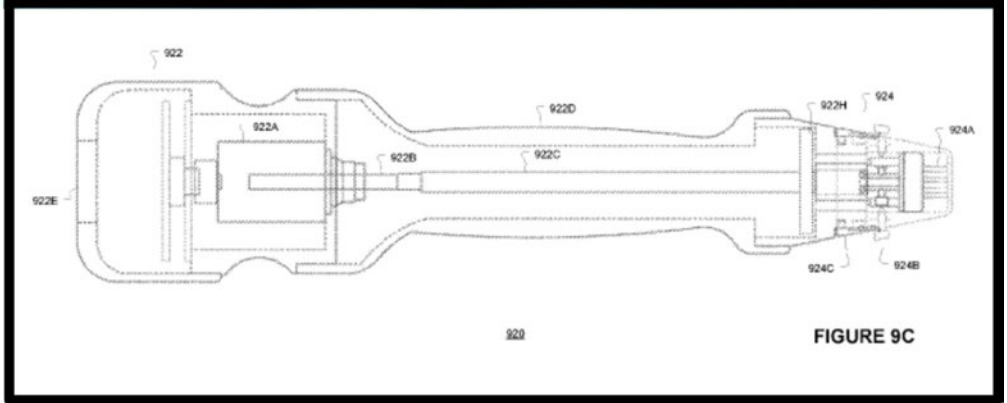

FIGURE 9C

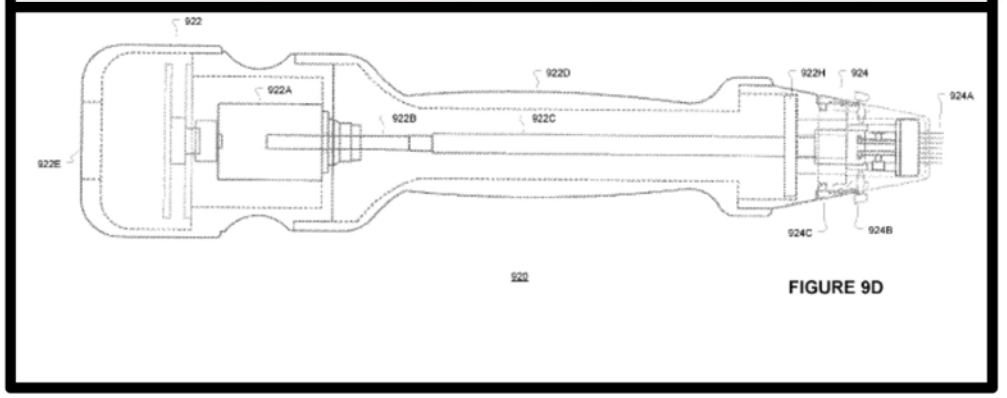

FIGURE 9D

56. Also, just as in the '812 Patent, how far the needles extend in the Sylfirm X is also based on user selection of a depth setting. Below, I include a

portion of the Sylfirm X User Manual, where the depth is clearly shown as one of the parameters the user selects in the graphical user interface of the product. Ex. 2083-016.

SylfirmX USER MANUAL

3.3 User Interface (UI)

i. Operation UI– Upper screen

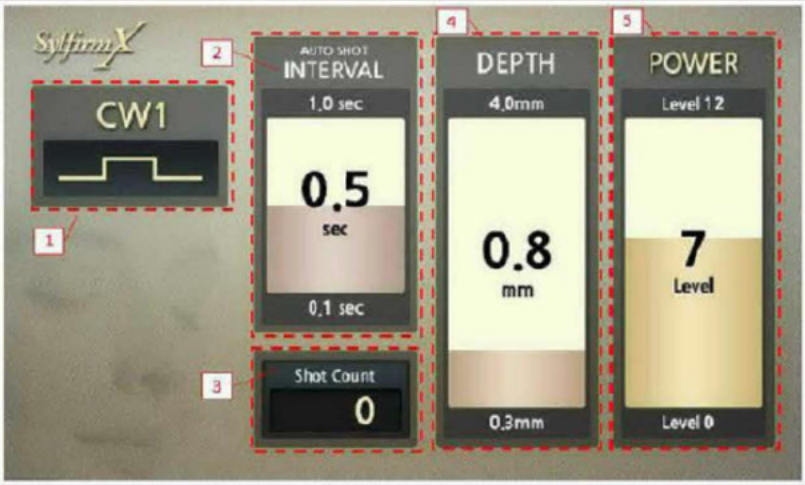

No.	Name	Description
1	Current operation mode display	The mode being operated
2	Auto Shot Interval display	Display of interval time between motor movements in Auto Shot (**0.1 ~ 1.0 sec**)
3	Shot Count display	Display total number of shot count
4	Depth display	Display microneedle penetration depth (**0.3 ~ 4.0 mm**)
5	Power display	Display RF output power level (**Level 0 ~ Level 12**) - Level 0: No RF output - Level 1 ~ 12: As the level increases, the output increases.

57. I understand that Bankim Mehta, one of the named inventors of the Mehta patent that forms the basis for Petitioner's IPR, was the CEO of Primaeva Medical, Inc. prior to being acquired by Syneron Medical, Ltd. Ex. 2152; Ex. 2153, 1. I also understand from Petitioner's expert that Primaeva Medical developed the

Miratone System, which is now marketed as Profound by Candela Medical (who acquired Syneron). Ex. 1003, Berube Decl., ¶¶9, 28.

58. During the 1356 ITC investigation, Petitioner initially relied on the Miratone system as prior art. Ex. 2053. To do so, it cited to a number of materials, mentioned below.

59. Unlike the Sylfirm X, the Miratone System does not allow the user (physician) to set a desired depth of treatment. In fact, depth is *not* one of the three parameters that the user can control.

60. The Petitioner relied on the Miratone System Instructions for Use, which states:

> The treatment dose is controlled by the physician using three primary parameters:
> - Lesion Temperature
> - Treatment Duration
> - Treatment Density

Ex. 2151, 7.

61. Notice that depth of the needles is not one of the three parameters selected *by the physician* to control the treatment dose. In fact, I could not find any reference in the Miratone System Instructions for Use for the physician to control, adjust, or set a desired depth – it is simply not there. Ex. 2151, 7.

62. Furthermore, the Miratone System Instructions for Use state as follows:

• **CAUTION**	You must visually inspect the electrode insertion on every insertion. The electrodes must be fully deployed and completely within the skin. No portion of the electrode should be exposed. The electrodes must be inserted evenly and at consistent depth. Note insertions that appear to be too deep and/or too shallow. IF THE ELECTRODES ARE NOT CORRECTLY DEPLOYED AND FULLY INSERTED INTO SKIN AT THE CORRECT DEPTH, DO NOT APPLY TREATMENT.

■ **Note:**	Correct treatment technique (applicator flat against skin with mild counter traction) and direct visualization correct insertion is the principal method of ensuring correct treatment depth.

Ex. 2151, 23, 25.

63. In other words, the Miratone System Instructions for Use reinforce my opinion that the Miratone System (which I understand to be the commercial embodiment of the Mehta patent) has no provision for setting a desired depth.

64. Furthermore, the Miratone user manual states that "The treatment is controlled by maintaining the electrodes at a set temperature during the treatment. This requires the Power, Energy, Temperature (Temp), Duty Cycle, and Treatment Time (Time) parameters be set on the GUI." Ex. 2150, 15; *see also, id*. at 19 and 20. The Miratone user manual does not list depth as a treatment setting.

65. Another material upon which Petitioner relied was a product brochure for the Miratone system. Ex. 2149, 2. The graphical user interface from the Miratone brochure is reproduced on the left below and Figure 10E of Mehta is shown on the right below. I see no user setting corresponding to the depth of insertion of the needles in either.

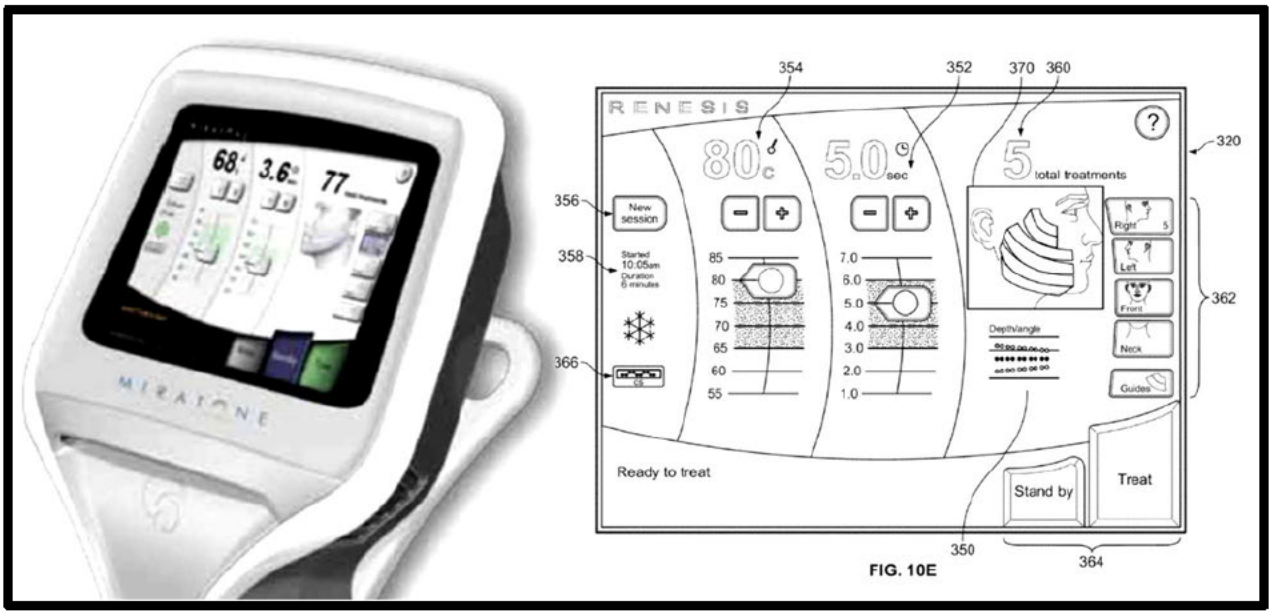

FIG. 10E

66. During the ITC 1356 Investigation, Petitioner also relied on the Miratone Instructions for Use. Below in include on the top the illustrations of the cartridges for the system and on the bottom Figures 4F and 4E of Mehta. *Compare* Ex. 2151, 14 (illustrated below)) *with* Ex. 1004, Fig. 4F and 4E (copied below). The cartridges are identical.

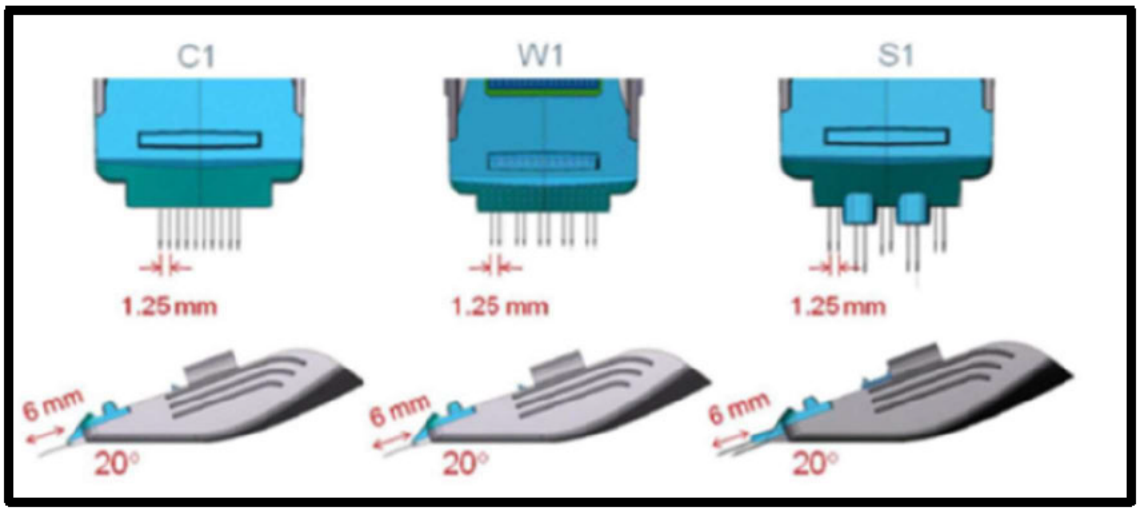

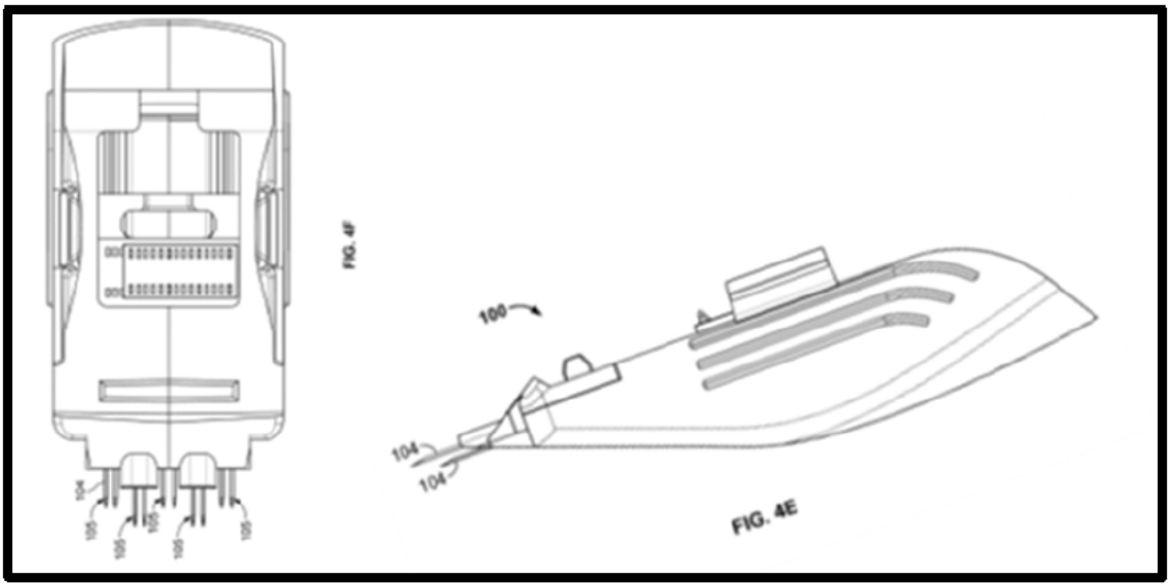

67. Also, the Miratone Instructions for Use explain that "Each electrode of a pair ***is designed to penetrate 6 mm*** within the skin at an angle of 20° to the surface of the skin." Ex. 2151, 14. In my opinion, that is consistent with Mehta's teachings of a system with needles of a particular length and a fixed non-adjustable insertion depth. That is different from the claimed embodiments of the '812 Patent and is an important distinction because the scope of the claims at issue here differs from what was known in prior art.

VII. CLAIM CONSTRUCTION

68. I understand the language of the claims is given its plain and ordinary meaning to a POSITA as of the priority date of the '812 Patent in the context of the patent's disclosure. I also understand that certain terms were construed during the ITC investigation. Ex-1005, 15–32. Relevant to this Petition, the portions of the claims directed to motor "to cause the plurality of the needles to extend a

desired distance from the releasably couplable deployable needle module end surface" / "to extend the plurality of needles a desired distance from the releasably couplable deployable needle assembly end surface" were not construed. I address that term below.

1. Motor . . . "to cause the plurality of the needles to extend a desired distance from the releasably couplable deployable needle module end surface" / "to extend the plurality of needles a desired distance from the releasably couplable deployable needle assembly end surface"

69. I understand that Patent Owner has disclaimed certain claims of the '812 Patent. Of the remaining claims at issue, the term "desired distance" appears in every claim, except for claims 9 and 18. Claim 2, which depends on claim 1, recites "a motor coupled to the needle assembly to cause the plurality of the needles ***to extend a desired distance*** from the releasably couplable deployable needle module end surface" (Ex. 1001, cl. 2) and claims 3, 4, 5 and 6 depend on claim 2. *Id*., cls. 3, 4, 5, and 6. Claim 8, which depends on claim 1, recites "energizing the motor via the drive shaft to the needle assembly to cause the plurality of needles ***to extend a desired distance*** from the releasably couplable deployable needle module end surface." *Id*., cl. 8. And claim 13, on which claims 14-16 depend, recites "a motor coupled to the needle assembly ***to extend*** the plurality of needles a ***desired distance*** from the releasably couplable deployable needle assembly end surface." *Id*., cls. 13-16 1 and 12. I understand that the term

"desired distance" in that phrase is to be given its plain meaning in the context of the claims. Based on my review of the claim language, the specification, and the prosecution history, as well as my knowledge of the art and the field of the patented invention as a POSITA at the time of the invention of the '812 Patent, in my opinion the plain and ordinary meaning of "desired distance" is how far the needles extend from the device's needle module or assembly end surface (depending on the claims) using a motor based on a user programming this distance, to penetrate dermatological issue. The software flow chart in the '812 Patent (Ex. 1001. Fig. 12) shows precisely how this is implemented in steps 934C and 936C.

70. The plain language of the claims makes clear they cover only needles that "extend" not needles that are already "extending." This distinction is important to understanding the scope of the '812 Patent claims in the context of the specification as it discloses embodiments covering "extending needles" and embodiments covering needles that extend. The parties' agreed to the claim construction for "extendable" and "extending" needles in the context of the '774 Patent, which is part of the same family as the '812 Patents is instructive. Specifically, the parties agreed that:

> needles one of extending or extendable: needles that are either extended or can be extended [from the device surface] (needles "extending" a desired distance from the surface covers non-

> extendable needles having a fixed length; "extendable" needles covers needles which are not fixed.

Ex. 1007, 16.

71. Therefore, looking at the language of the claims, the specification, and the parties' agreed construction in the ITC, it is my opinion that a POSITA would understand that the claims in the '812 Patent cover the embodiments directed to needles that "extend" not needles that are already "extending." Thus, fixed and non-extendable are outside the scope of the '812 Patent claims.

72. The claims recite a motor that causes the plurality of needles "to extend" a "desired distance" from the needle module end surface in the context of claims 2-6 and 8 or the needle assembly end surface in the context of claims 13-16. Ex. 1001, cls. 2-6, 8, and 13-16. The claims also make clear that the needle assembly end surface is placed "on or near dermatological tissue" (*id.*, cl. 1) to treat that "dermatological tissue." *Id*. Because the needles "extend" from the needle module or needle assembly end surface, under the claims, the distance that the needles extend from that end surface is to penetrate dermatological tissue.

73. The '812 Patent specification is consistent, describing a central processing unit (CPU) that employs an algorithm shown in Figure 12, which is reproduced below, where the algorithm controls the system architecture. As illustrated and described in the '812 Patent specification, one of the parameters inputted into the algorithm is the "selected depth" for the needles to extend.

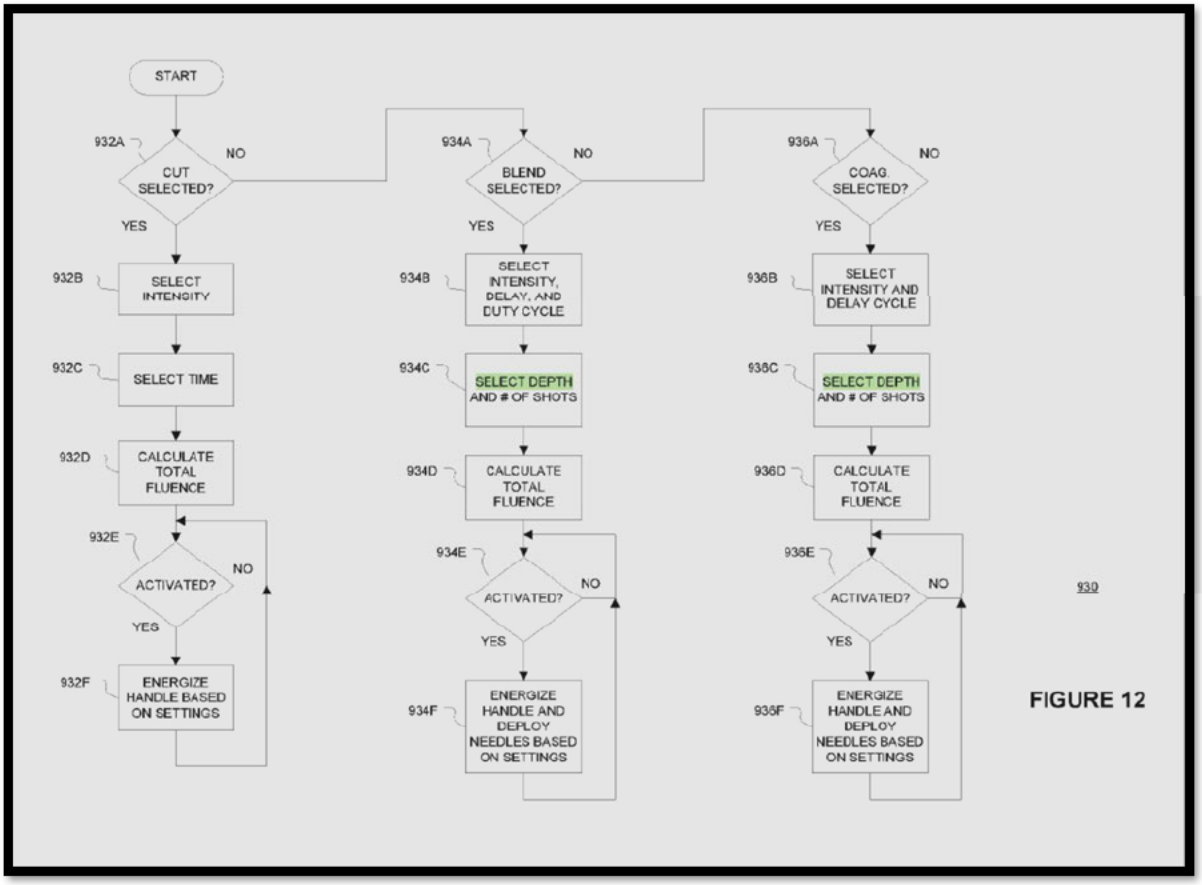

Ex. 1001, Fig. 12.

74. The '812 Patent further explains that "upon activation (activity 934E, 934F) the DTA [dermatological treatment architecture] 900 may energize the MLM [motor and LED module] 922 based on the operational parameters and deploy the needle assembly 924F to a desired extension beyond the DNM [deployable needle module] 924 shell 924E to enable a desired depth of needle 924A penetration within tissue when the shell 924E is placed adjacent the tissue." *Id.*, 14:14-20; *see also id.*, 14:28-34. In this manner, the motors "enable precise needle deployment depth or extension beyond the DNM 924 shell." *Id.*, 11:58-61; *see also id.*, 14:3-6, 14:24-26. Therefore, in my opinion, the specification confirms

that the "desired distance" is how far the needles extend from the device's needle assembly end surface to penetrate dermatological issue using a motor based on a user programming this distance.

75. With respect to the prosecution history, during the prosecution of the '536 patent, which is the parent to the '812, the Examiner rejected claims 3, 4, 10, 13, 14, and 20-24 under 35 U.S.C. § 103 as unpatentable over U.S. Patent No. 6,890,319 to Crocker ("Crocker") in view of U.S. Patent No. 7,618,429 to Mulholland ("Mulholland"). Relevant to the meaning and scope of "desired distance" the Examiner relied on column 10, lines 11-20 in asserting that Crocker disclosed that "[a] motor is energized to extend the needles a desired distance." Ex. 2114 ('536 Patent File History), 278. That passage of Crocker states that "control of the depth" of needle insertion can be "electrical or mechanical" means "capable of adjustment by an operator" or that "control of the depth of penetration may alternatively be automatic" using feedback based on "current" measurements. Ex. 2115 (Crocker), 10:11-20. In my opinion, the Examiner's reliance on this passage is indicative that the Examiner understood that the "desired distance" is based on a user's selection to provide control over the penetration depth (directly or automatically through a feedback mechanism).

76. As to Petitioner's and its expert's assertion that a "desired distance" just means "a ***desired distance*** as opposed to an ***undesired*** distance" (Pet. 11-12),

I disagree. The '812 Patent does not use the term "undesired." And to the extent it would have any meaning based on the intrinsic evidence, "undesired" would be a different distance than the distance that the needles extend based on the depth that the user selected. Petitioner appears to contend that selection of any cartridge with any needle length is sufficient to meet the "desired distance" limitation of the claims. But that would render the "desired distance" limitations meaningless and would require looking into what the user was thinking, i.e., his or her state of mind when selecting a particular cartridge configuration. I have seen nothing in the intrinsic evidence to support such a construction for the "desired distance" limitations. Instead, the '812 Patent focuses on the user's objective action of selecting the depth, which is then used to program that distance to which the needles extend.

VIII. PRIOR ART

A. U.S. Pat. No. 8,608,737 to Mehta

77. Mehta is a U.S. patent that was filed in 2009 and issued in 2013. Ex. 1006 (Mehta). Mehta sought to address a need for an "improved energy delivery system." *Id.*, 2:3-4. Mehta discloses a "treatment system 200 [that] generally includes a treatment unit 202 having a hand-piece or device body 210. . . having one or more probes 104 extending from the body 210." *Id.*, 9:34-39. "In some variations, the probes 104 are coupled to the body 210 via a removable cartridge

100." *Id.*, 9:40-41, Figs. 2A and 2D. Mehta discloses that the "system 200 also includes an energy supply unit 90 coupled to the treatment unit 202 via a cable 96 or other mean" and "[i]n one variation the energy supply unit 90 may be a RF energy unit." *Id.*, 10:53-57,11:14-15.

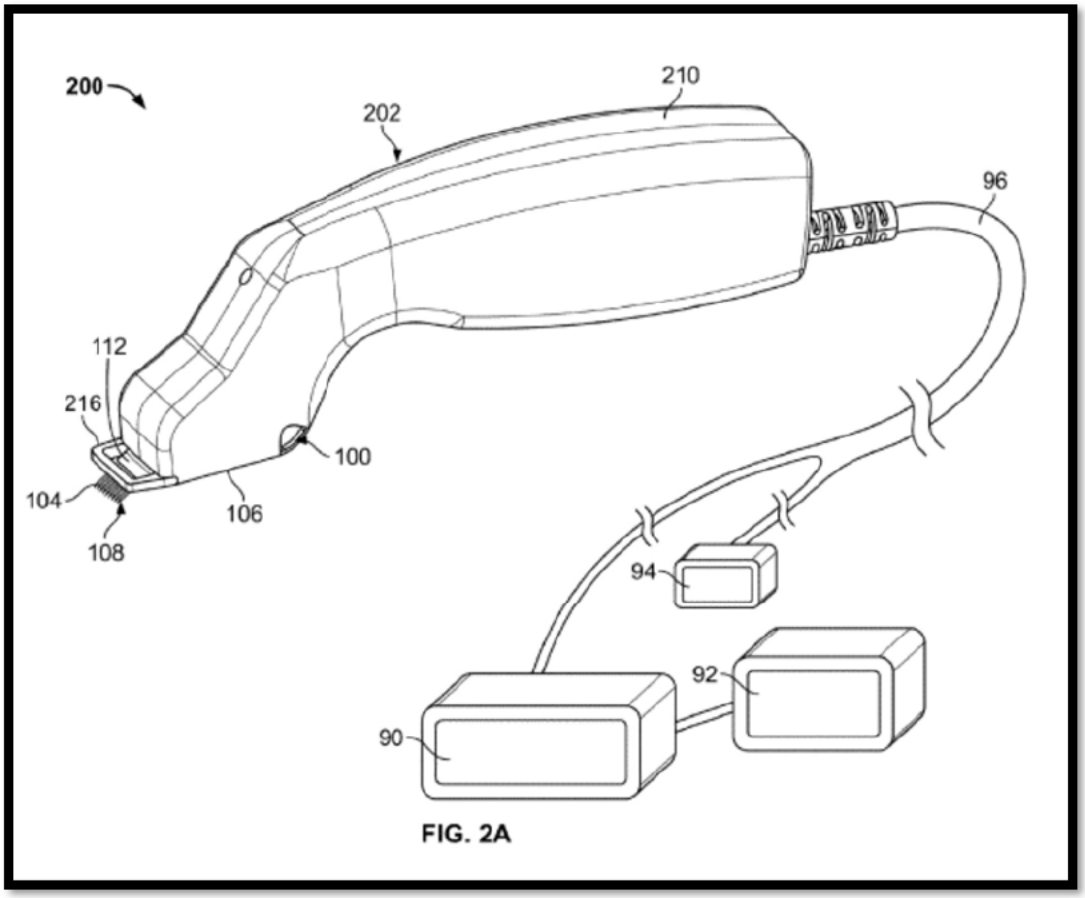

FIG. 2A

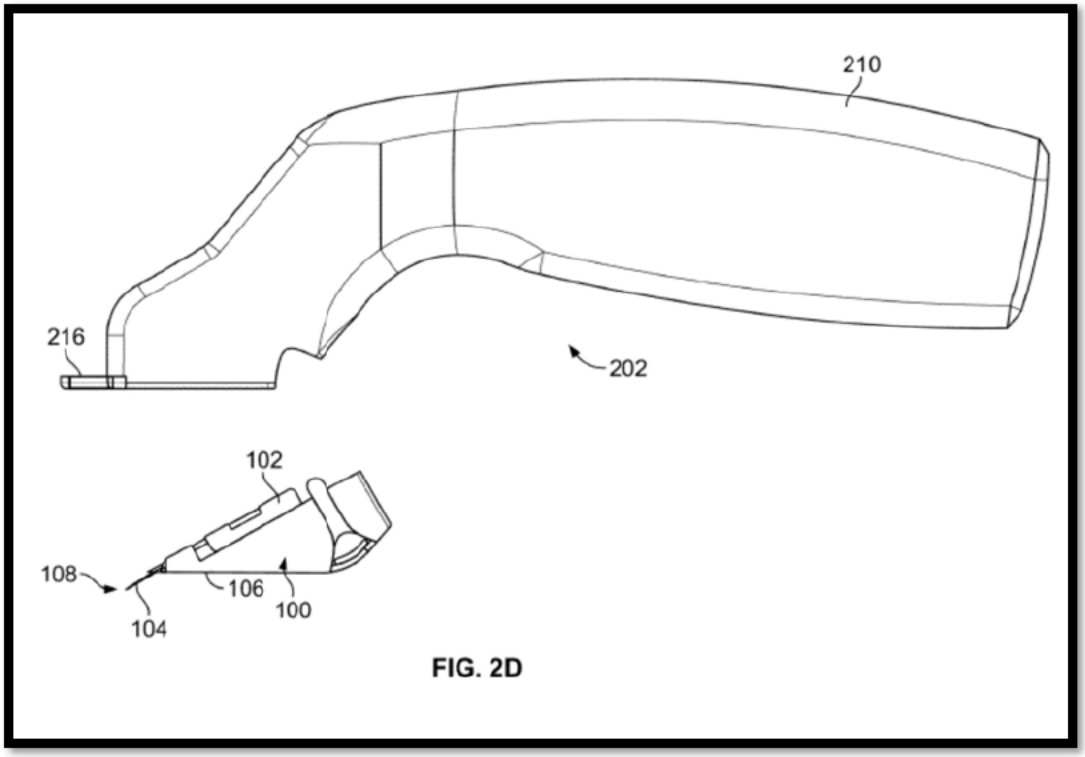

FIG. 2D

78. In Mehta, "[t]he tissue engagement surface 106 allows a user to place the device on the surface of tissue and advance the probes 104 to the desired depth of tissue. Because the tissue engagement surface 106 provides a consistent starting point for the probes, as the probes 104 advance from the device 202 they are driven to a uniform depth in the tissue" *Id.*, 21:10-16. Mehta also discloses preventing probes from delivering energy at "an unintended shallower location" other than "a specific depth in the target tissue that corresponds to the length of the extended electrode" by only coupling the probes to the power supply when "fully extended." *Id.*, 15:62-16:8. But Mehta does not disclose any ability for a user to select the needle insertion depth; the stabilization plate provides a "consistent starting point" but does not offer any user control over the insertion depth.

79. In Mehta, if the probes are not in the target tissue, a physician can manually adjust the placement of the device on the patient's skin or can select a different cartridge with a different needle array configuration, e.g., a different length or angle for needle insertion. Specifically, Mehta explains that "[t]he present invention allows a physician to selectively change array confirmation by attaching different cartridges." *Id*., 10:3-5. The device in Mehta "can include any number of arrays depending upon the intended treatment site" and "the target region of tissue drives the array configuration." *Id*., 9:65-10:3.

80. To confirm the probes reached the target tissue, Mehta discloses several ways of assessing penetration depth after the needles have been extended into the skin. For example, Mehta explains that "ultrasound energy can [] be used for imaging purposes . . . to assess the penetration depth of the electrodes, or to identify in which layer the electrodes are located." *Id*., 12:1-4. As another example, Mehta teaches that "[m]easurement of a tissue parameter by the sensor 110 provides information that can confirm whether the probe 108 is located in the desired target region. For example, when measuring impedance of the tissue, if the measured impedance is not within a range normally associated with tissue, the system can prevent treatment and alert the user for the need to reposition the probe 108. Accordingly, the probe 108 can ultimately be repositioned as shown in FIG.

8B (or the active area 122 of the probe 108 can be repositioned)." *Id.*, 24:37-45; *see also* Fig. 8A.

81. Mehta identifies a problem that the "physician can inadvertently place the array 108 of probes 104 at an angle relative to a tissue surface," which would result in the probes not reaching target tissue as expected based on the length of the needles and their insertion angle. *Id.*, 32:20-22. "To address this problem," Mehta discloses "measur[ing] tissue parameters to provide feedback to the physician," so that the physician can appreciate if there was an inadvertently incorrect placement of the probe array. *Id.*, 32:23-25. This feedback can be "visual, virtual, audible or other feedback[] allowing the user to identify whether the placement of the probes" is as it was "desired" or not. *Id.*, 32:46-50.

82. As an example, Mehta discloses a "virtual depth/location depiction 350" in a graphical user interface, as shown in Figure 10E and in a close-up view in Figure 10B (both copied and annotated below). *Id.*, 32:63-33:64.

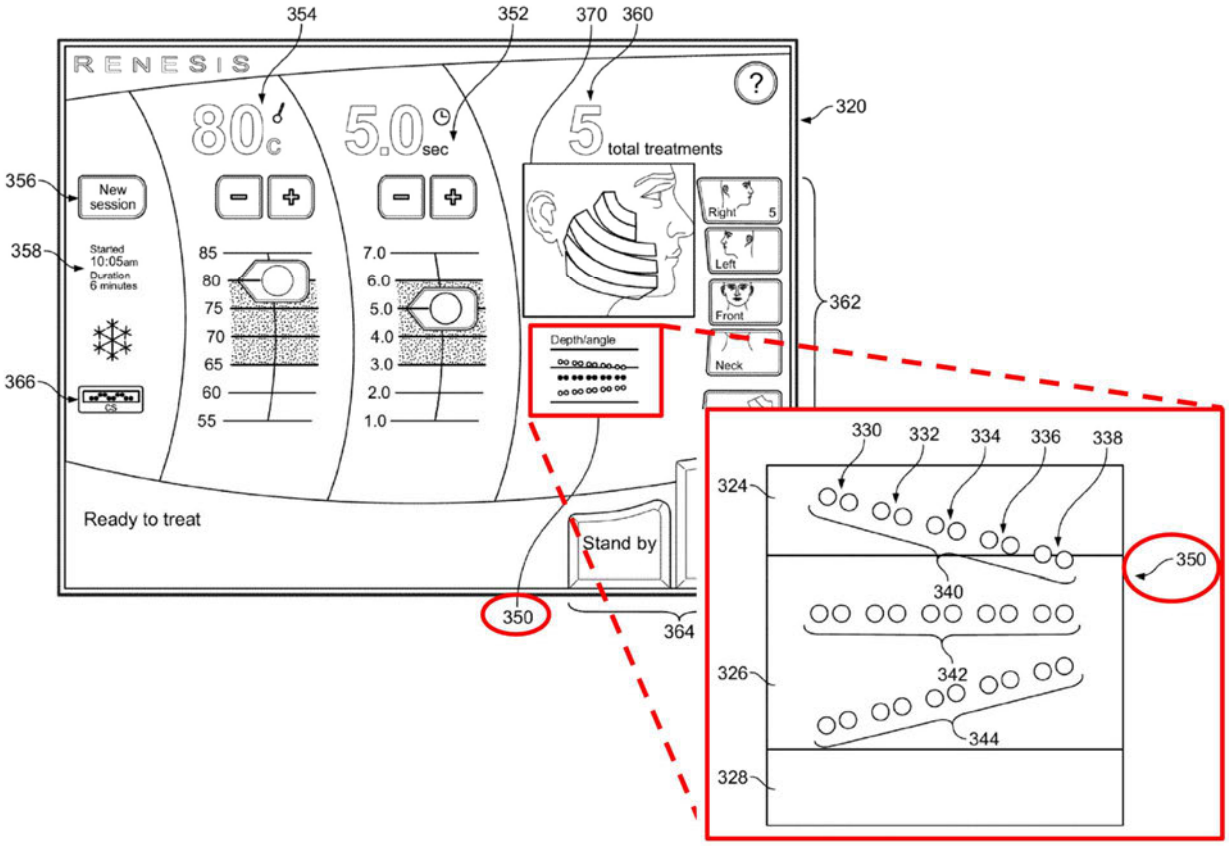

83. Virtual depth/location depiction 350 can "show the location of the probe array prior to treatment" (i.e., prior to energy application) and how it compares to the "desired probe location," i.e., "the desired placement for providing treatment." *Id.*, 32:63-33:3. Thus, a "physician would be informed" whether, for example, the probe array "is located in an undesired region" and "further advancement of the probes is necessary" to reach "the desired tissue layer." *Id.*, 33:14-40.

84. Mehta is substantially the same in relevant disclosures as U.S. Pat. App. No. 12/398,924 (U.S. Pat. No. 8,540,705) ("Mehta '705") that the USPTO considered during prosecution of the '812 Patent. Both Mehta and Mehta '705 were

assigned to Syneron Medical Ltd., listed Bankim Mehta as a named inventor (Mehta also lists two other people), and were filed days apart in the spring of 2009 (Apr. 20, 2009, and Mar. 5, 2009, respectively). Many of the figures in Mehta that the Petitioner relies on are exactly the same as those in Mehta '705. *See, e.g., compare* Ex. 1006 (Mehta), Figs. 2A-D, 3A, 3B, 4A-F *with* Ex. 1011 (Mehta '705), Figs. 2A-D, 3A, 3B, 4A-F.

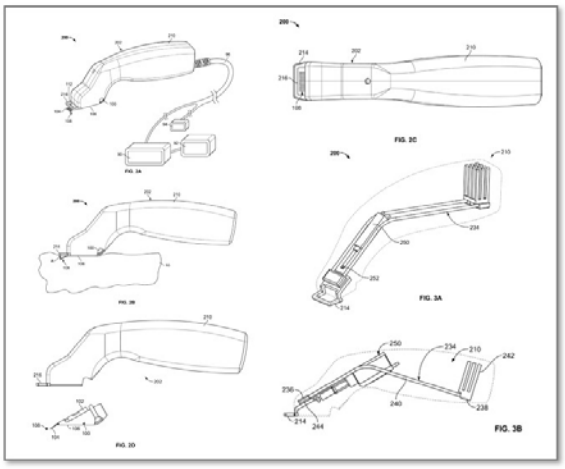

Ex. 1006 (Mehta), Figs. 2A-D, 3A, 3B.

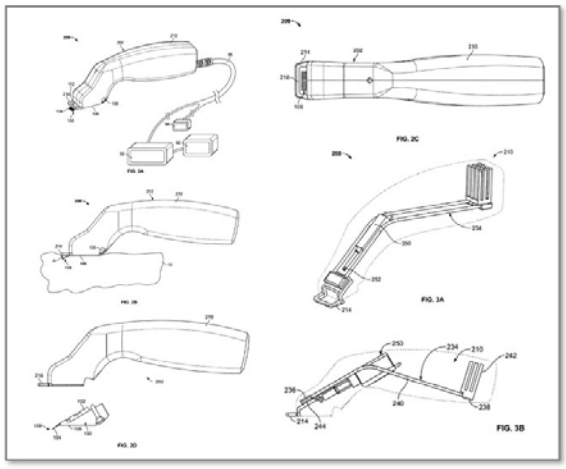

Ex. 1011 (Mehta '705), Figs. 2A-D, 3A, 3B

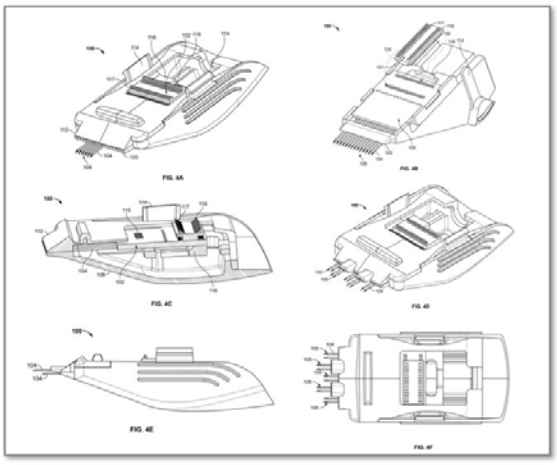

Ex. 1006 (Mehta), Figs. 4A-F.

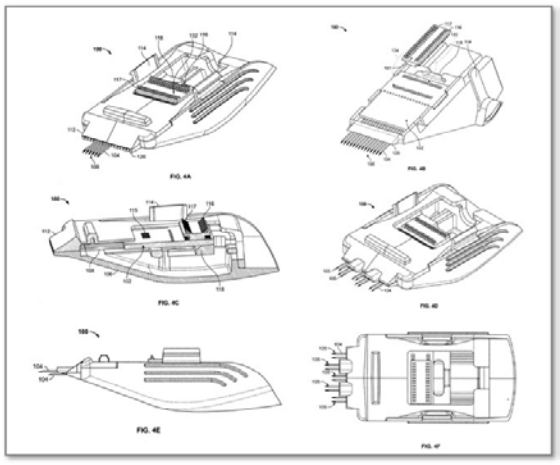

Ex. 1011 (Mehta '705), Figs. 4A-F

85. The descriptions of those figures are substantially the same, if not identical, in Mehta and Mehta '705. *See, e.g., compare* Ex. 1006 (Mehta), 9:34-10:39 (description of Fig. 2A), 15:27-16:41 (description of Fig. 4A), 18:21-45 (description of Fig. 5) *with* Ex. 1011 (Mehta '705), 10:20-11:25 (description of Fig. 2A), 15:63-17:18 (description of Fig. 4A), 19:1-25 (description of Fig. 5); *see also compare* Ex. 1006 (Mehta), 36:20-37:24 (description of experiment) *with* Ex. 1011 (Mehta '705), 31:10-32:16 (description of experiment).

B. KR20-0441552 ("Lee")

86. Lee is a Korean patent publication that was published on August 25, 2008. It "relates to a skin regeneration apparatus used for performing multi-hole procedures to remove or treat stretch marks, calluses, wrinkles, hair loss, scars, etc." Ex. 10009 (Lee), 2. Lee's device is a "gun equipped with a plurality of microneedles" as illustrated in Figure 2 below.

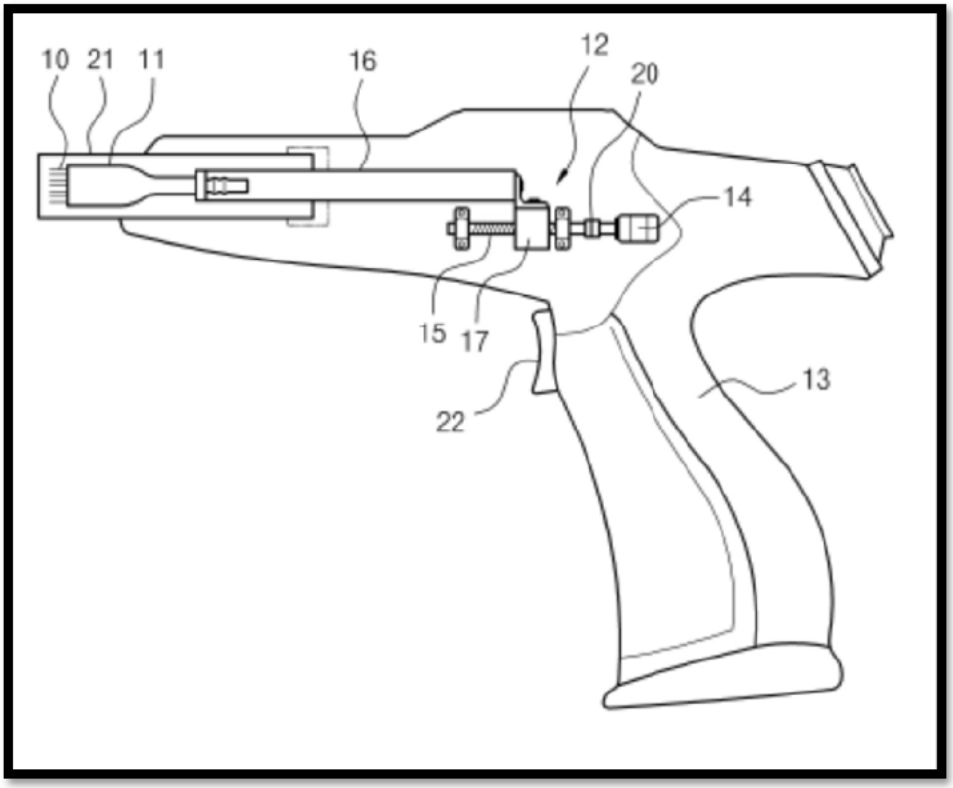

87. The invention of Lee seeks to create "hundreds to tens of thousands of tiny holes are created on the human skin to regenerate tissues by using its self-healing ability to heal the skin that is damaged in the process of making the tiny holes" and apply medication on "the area where tiny holes are created, allowing the drugs to quickly permeate the skin through the tiny holes, thereby maximizing the efficacy of treatment." Ex. 1009 (Lee), ¶15.

88. Lee "provides an actuator means that can control the insertion depth of the microneedles." *Id.*, ¶44. "[T]he process of reciprocating operation of the microneedles is repeated many times by repetitively driving the motor back and forth, allowing creation of hundreds to tens of thousands of holes on the human

skin." *Id.*, ¶63. The treatment method [of Lee] allows repetitive insertion of needles at a constant speed and at a constant depth." *Id.*, ¶57.

C. Na '848

89. Na '848 is an international patent application that was filed on August 22, 2008, and published on February 11, 2010. Na '848 describes and illustrates an apparatus with a handle and either a plate or a roller with pins. Ex. 1007 (Na '848), ¶¶22-38, Fig. 1A-4C. Figs. 1B, 2B, and 3A below represented the devices disclosed in Na '848.

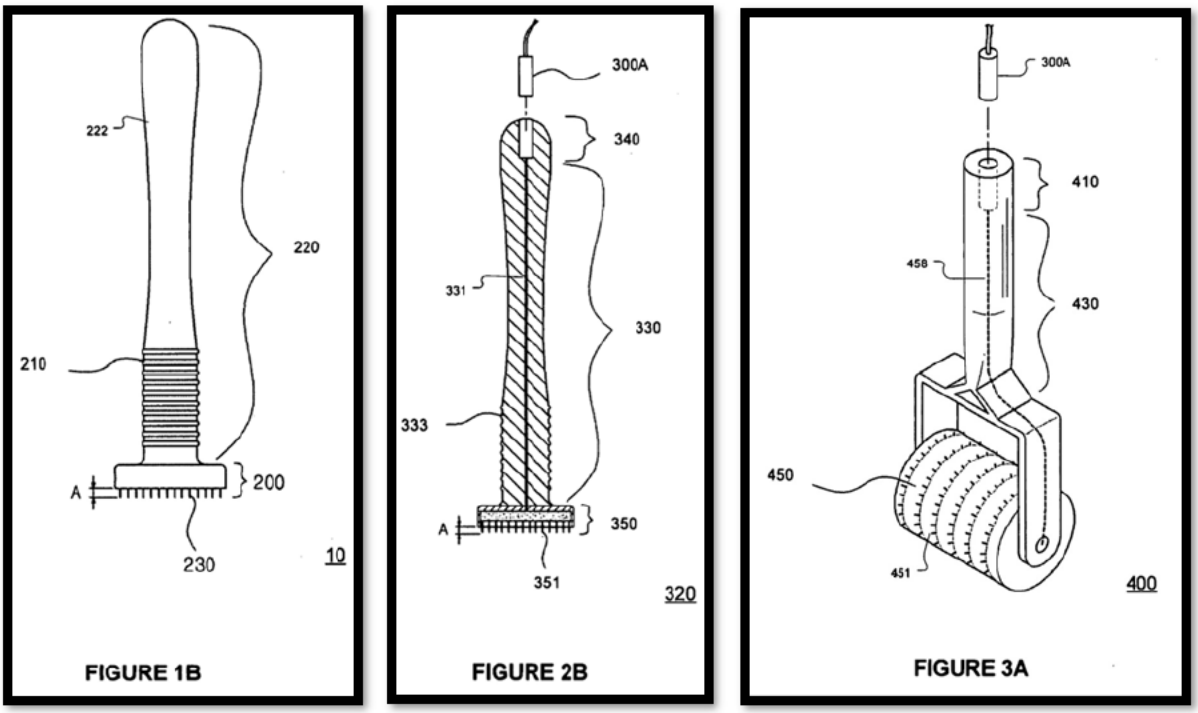

90. The needles in Na '848 are fixed, and the patent describes that length as length A shown in Figure 1B above. Ex. 1007 (Na '848), ¶26. Na '848 does not disclose a motor at all, much less a motor to extend or deploy the needles and even less to extend or deploy the needles at a distance or depth that the user selects.

Na '848 also discloses "FIGS.5A-5B are diagrams of electrical signal waveforms 650, 630, 640 that may be applied to one or more LEDs 32A, 32B, 532 and to the pins 230, 351, 451 according to various embodiments," such as to "cause one or more pins 230, 351, 451 to vibrate." *Id.* ¶ 39

D. WO 2008/005477 ("Livneh")

91. Livneh is an international patent application filed on July 5, 2007 and published on January 10, 2008. Livneh relates to "[a]n electro surgical apparatus" to "appl[y] electrical current to skin." Ex. 1010 (Livneh), Abstract. Livneh discloses an apparatus 30 with handheld unit 34 that includes a "housing 36 [that] is connected to handle portion 38." *Id*. [0033]. "The housing 36 defines a cavity 40 in which the electrodes 32 are concealed when not in operation." *Id*. [0034] The electrodes 32 move from a first and second position based on operation of mechanism 74. Specifically, In Liveh, mechanism 74 fully extends (as shown in Fig. 4 below) and fully retracts (and fully retracts) to move the electrodes between a first and a second position. *Id*. [0042]. [0046].

92. The "mechanism 74 must be flexible to accommodate the change in direction provided by bend 78 and other contours formed by the housing 36." *Id*. [0044].

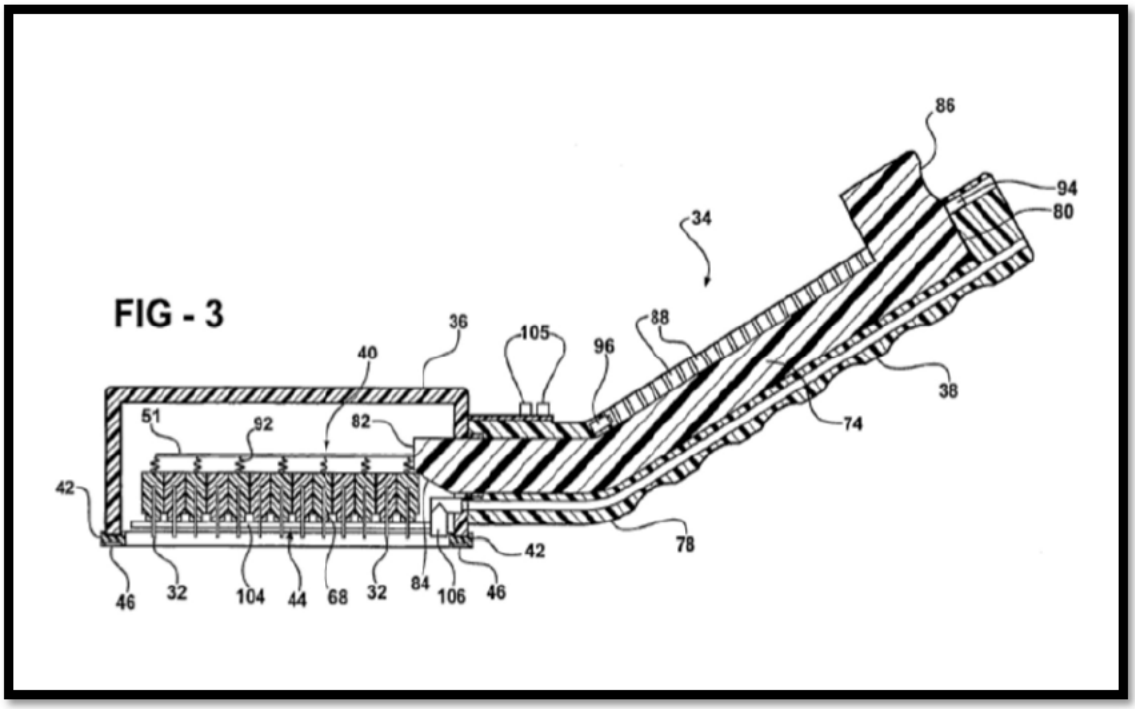

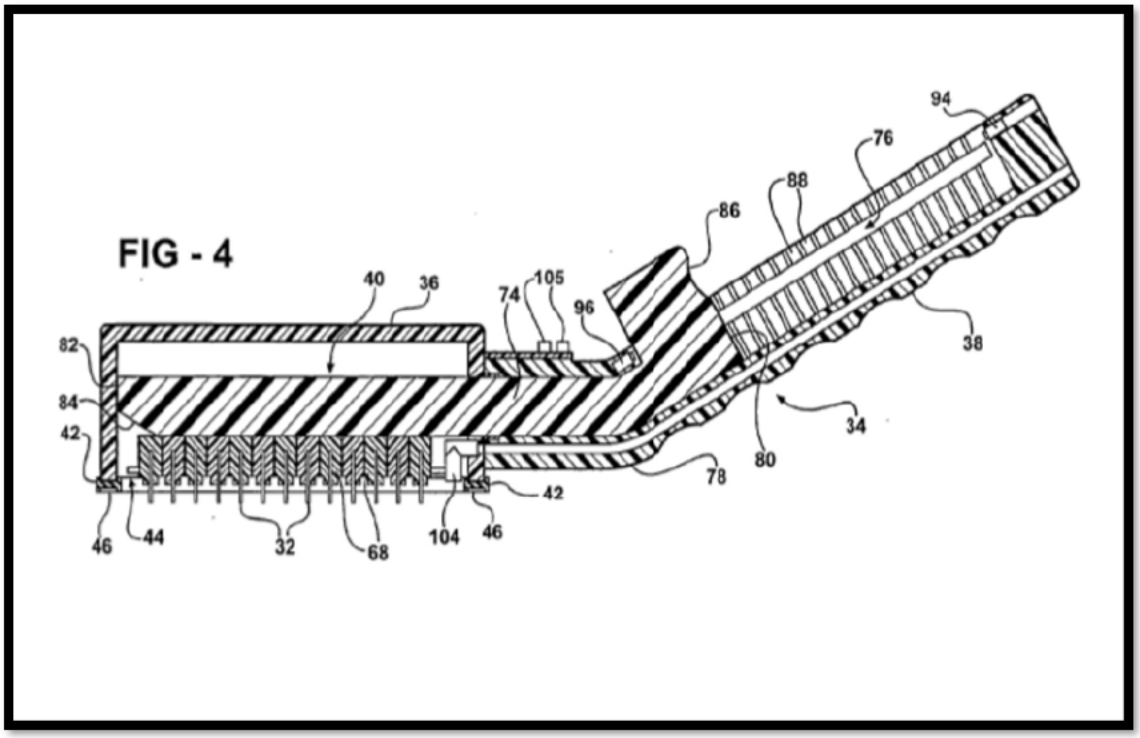

93. Livneh explains that "mechanism 74 includes a proximal end 80 and distal end 82" which is "tapered to provide an angled surface 84 for operatively

engaging the electrodes 32 as the mechanism 74 is moved from the first position to the second position." *Id*. [0045].

94. Regarding the electrodes, Livneh explains that they are "preferably carried by an electrode carrier" and discloses that combs 62 are supported by a holder 68, as shown below in Figure 7. In Livneh, "[a]t least one coil 92 extend from a top of each holder 68 to return the holder 68 and the electrodes 32 to the first position after retreat of the mechanism 74." *Id*. [0049].

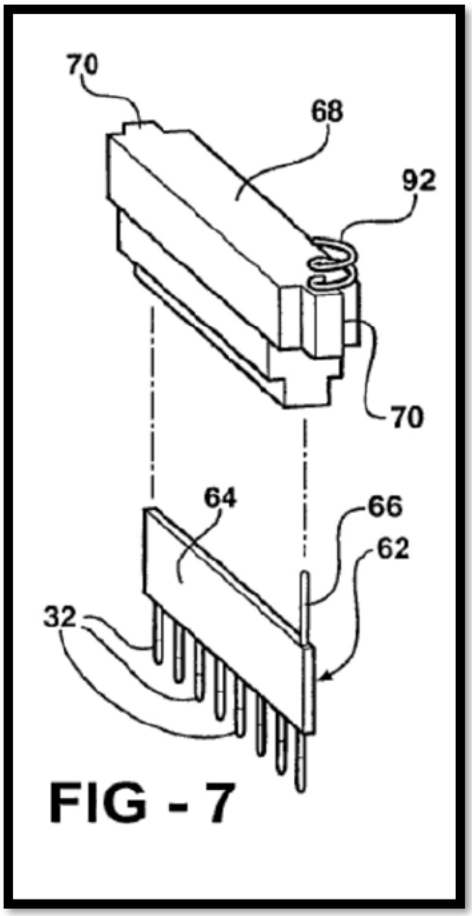

IX. NONE OF THE GROUNDS IN THE PETITION SHOW THAT CLAIMS OF THE '812 PATENT ARE UNPATENTABLE

A. GROUND I – Claims 2-5, 8, and 13-16 are not anticipated by Mehta

95. Claims 2-5, 8, and 13-16 require a motor "to extend" the plurality of needles a "desired distance" from the needle module or the assembly end surface, depending on the claim. Ex. 1001, cl. 2-5, 8, and 13-16.[2] As discussed in the claim construction section (*see supra* Section VII.B.1.), the "desired distance" in these claims is how far the needles extend from the needle module or needle assembly end surface using a motor based on a user programing of that distance, to penetrate dermatological issue. Mehta fails to disclose the claimed "desired distance," and in my opinion, for at least that reason, it fails to anticipate claims -5, 8, and 13-16.

96. In Mehta, the user does not select how far the needles extend to penetrate dermatological tissue. Instead, Mehta discloses selecting cartridges having different probe ***lengths*** or ***angles***, not selecting ***how far*** the probes in a given cartridge extend when used in Metha's system. Mehta discloses "[s]electing probes having sufficient length to reach" different layers of the dermis (Ex. 1006 (Mehta), 2:47-49, 8:16-18) and explains that "the length of the probes 104 is

[2] I understand that Patent Owner disclaimed claims 1, 7, 10-12, 19, and 20 (Ex. 2144, (Disclaimer)), and as a result I do not address those claims.

generally selected so that the energy delivery occurs is in the dermis layer of the skin 10 ....” *Id*., 10:21-23. But Mehta does not disclose how the user determines how far the needles extend from the device's end surface to penetrate the skin using a motor, and Mehta does not disclose any software system for implementing the user's desired depth. There is no disclosure in Mehta of any programming of how far the needles extend.

97. Also, the system in Mehta is designed for insertion of the needles a ***fixed distance***. *Id.*, 10:2-7, 10:19-25, 12:31-34, 16:1-8. Thus, in Mehta, the distance that the needles extend when using a particular cartridge is not a programmed distance reflecting how far the user wants the needles to extend, but rather is determined by the “fixed length” of the needles. *Id.*

98. As I noted above, during prosecution of the '812 Patent, the Examiner considered Mehta '705, and as I explained above, Metha '705 contains the same disclosures as the Mehta that Petitioner relies on here. Ex. 1001 ('812 Patent), pg. 2 (“References Cited”); Ex. 1011 (Mehta '705), 10:20-11:25, 15:63-17:18, 19:1-25. I understand that the Examiner did not reject the claims of the '812 Patent, including those requiring a “desired distance” based on Mehta '705. Ex. 1002 ('812 Patent File History), 577-582, 645-651. This further confirms my opinion that Mehta does not disclose the claimed “desired distance” limitation in the claims of the '812 Patent.

99. Based on my review of the Petition and the Petitioner's expert declaration and testimony, both fail to cite any disclosure in Mehta of user selection of the distance that the needles extend, and that is because there is none.

100. Petitioner relies on actuator 250 in Mehta to argue that Mehta "discloses a motor to extend the plurality of needles a desired distance from the releasably couplable deployable needle assembly end surface" and that "[w]hen the needles 104 are advanced by the motor, they extend by a desired distance to carry out treatment. Pet. 27. While Petitioner cites to disclosure in Mehta of using an actuator to extend the needles, it does not identify any disclosure of programming that actuator with a distance that the needles extend. *Id.* (citing Ex. 1006 (Mehta), 18:26-37. In fact, as Petitioner and its expert recognize, the only "selecting" disclosed in Mehta that relates to the distance that the needles extend is based on "***choosing a particular removable cartridge having needles of a particular length***." Ex. 1003 (Berube Decl.), ¶95. Petitioner and its expert also rely on "choosing" a cartridge having a particular insertion "angle." Pet. 28-29; *see also* Ex. 1003 ¶95. But, a user selecting a cartridge with a different array configuration would be akin to manual selection of how far the needles will extend to reach a target tissue. The '812 Patent claims, however, require using a motor to extend the needles based on a programmed distance. And neither selecting the length or the angle of the needles in a particular cartridge configuration teach anything about

programming how far the needles extend from the device's end surface using a motor to penetrate the skin. Nothing in the passages of Mehta that Petitioner and its expert cite discloses programming a distance that the needles extend using a motor.

101. The only disclosure that Petitioner and its expert identify of "desired depth" in Mehta is not a "desired depth" that a user selects for the needles to extend; instead, it is a displayed depth for comparison to where the needles were extended. Petitioner relies on Mehta's "virtual depth/location depiction" system to contend Mehta discloses a desired depth. But that is not a "desired depth" that a user selects for the needles to extend. Rather, it is a displayed depth to confirm where the needles were extended. Specifically, Mehta's "virtual depth/location depiction" "show[s] 'the desired depth of placement for providing treatment'" to compare it to the "location of the probe array" so that a user can determine whether the probes are in the desired region or "an undesired region." Ex. 1006 (Mehta), 32:63-33:43 (cited in Pet. 27). That Mehta discloses a virtual display for ***comparing*** "actual depth" to the "desired depth" (and other ways of tracking insertion depth, e.g., "depth markings"), as Petitioner concedes (*see* Pet. 28), in my opinion reinforces that Mehta does not disclose programming a motor or mechanism or any other means to control extending the needles "a desired distance." Providing information to a user about the location of the needles is different from programing how far the

needles extend using a motor, which is what the claims require, and Mehta fails to disclose.

102. The same is true with respect to Mehta's disclosure that Petitioner's rely on regarding distinguishing characteristics on the probes, such as depth markings, to provide information to a physician regarding probe placement. Specifically, Mehta discloses that "[t]he electrodes of the probe array can also include any number of visually distinguishing features (e.g., depth markings, colors, shades, etc.) that enable a physician to observe proper placement" and probes can have distinguishing features to "allow the physician to determine the depth of insertion of the probe." Ex. 1006, 13:37–45. Observing or determining needle placement after they have been extended into the tissue is not the same as programming a distance that the needles will extend using a motor, which is that the claims require.

103. The same is true regarding Mehta's disclosures of using sensors and measuring tissue parameters. Mehta teaches using sensors to measure tissue parameters that can provide information to confirm whether the probes are in the desired target region. Ex. 1006, 24:37-39. If the probe is not in the correct region, "the system can prevent treatment and alert the user for the need to reposition the probe 108." *Id*., 24:41-43. But, again, measuring tissue parameters after the needles have been extended into the tissue teaches nothing about programming how far

those needles will extend using a motor, as the claims require. Measuring and observing tissue parameters is obtaining information to confirm reaching a target region ***after*** the needles are inserted, while programming how far needles extend using a motor is how to reach a target region ***before*** extending the needles.

104. Thus, Mehta teaches monitoring the location of ***already-extended*** needles in tissue and providing that information to the user to make any necessary adjustment to reach the target area. But that is different from programing how far the needles ***extend*** using a motor, which is what the claims require, and Mehta fails to disclose.

105. Regarding Mehta's disclosure of a "step-motor" as one of the possible "mode[s] of movement of the actuator" that Petitioner cites (Ex. 1006 (Mehta), 15:36-40 (cited in Ex. 1003 ¶94)), this disclosure is only of how the actuator can be implemented. Nothing in Mehta, including the disclosure of a step-motor, discloses programming that motor with a distance corresponding to how far the needles extend. And, as the Petitioner's own expert admits, a motor that extends a plurality of needles a predetermined distance only meets the claims "***[a]s long as you can program this distance***" and otherwise "does not" meet the claims. Ex. 2125 (Woloszko Hr'g Tr.), 1151:8-12, 1151:23-1152:3. Petitioner points to "command signals" (Pet. 29 (citing to Ex. 1006, 12:5-8) from Mehta, but those signals have nothing to do with selecting a distance that the motor extends the

needles. In fact, nowhere does Mehta disclose distance or depth as one of the "control and processing variables." Ex. 1006, 12:5-8. Simply put, there is no disclosure in Mehta of programming the distance that the needles extend using a motor and, based on my review of the Petition and supporting declaration, Petitioner does not contend otherwise.

106. Petitioner also relies on Mehta's disclosure of "[o]ver-inserting and then partially retracting" the needles. Pet. 28. But Mehta as Mehta explains, "[o]ver inserting and then partially retracting the electrodes compensates for the movement and laxity of the skin resulting in a more reliable insertion." Ex. 1006 (Mehta) at 16:34-41. Mehta does not disclose a user making a selection that determines how far the needles extend, over-insert, or retract. Mehta also does not discloses any kind of programming of a motor to extend, over-insert, or retract. Mehta's display includes no such option.

107. In my opinion, the invention of the '812 Patent is vastly different from the system described in Mehta. In the '812 Patent, the user attaches a needle cartridge or module to the handpiece and then selects the depth the needles should extend before the needles extend and that selection is used to control how far the motor extends the needles. In contrast, in Mehta, the user attaches a cartridge to the handpiece, the needles extend a fixed distance into the tissue, and the user is provided information with which the user can determine whether the needles are

located at the proper depth (for example via depth markings measurements of tissue characteristics, or virtual depiction system) and then the user activates energy delivery to the target tissue. If the needles are not in the correct location, the user then either selects a different cartridge to use or withdraws the needles and re-inserts. The process would need to be repeated until the user is informed the needles are at the proper depth. These are two completely different ways to reach the result of reaching a target region of the tissue.

108. In the '812 Patent, needles are extended to a desired distance and energy is delivered, with no need for the user to confirm the needles are at the desired distance. In Mehta, needles could be extended to an undesired distance and the validation and confirmation means disclosed to confirm their location are used to determine if adjustments need to be made prior to delivering energy. That is the opposite of the invention described and claimed in the '812 Patent.

B. GROUND II – Claims 2-6, 8 and 13-16 are not obvious in view of Mehta and the knowledge of a POSITA

1. Mehta does not teach or suggest the claimed "desired distance" limitation of claims 2-6, 8, and 13-16

109. As I note above, claims 2-6, 8 and 13-16 recite needles that extend a "desired distance." Ex. 1001 ('812 Patent), cls. 2, 8, and 13. In my opinion, Mehta in view of the knowledge of a POSITA does not render the claims obvious least because Mehta does not disclose a device including needles that extend a "desired

distance" as claimed (*see* Section VIII.A, *supra*), and a POSITA would not have been motivated to modify Mehta to include that feature.

110. Petitioner again relies on Mehta's disclosure of a "step-motor" to argue that a POSITA "would have understood that a step-motor would move the needles 104 from a fully retracted position, through a plurality of discrete, intermediate steps ..., to a fully extended positions." Pet. 40. But this description of the operation of a step-motor does not disclose or suggest that a user selects a distance to extend the needles. And even assuming that a POSITA "would … have known how to program a controller to cause the step-motor of Mehta to move the needles 104 to any specific intermediate step between a fully retracted position and a fully extended position" (Ex. 1003 ¶148), Petitioner and its expert do not explain ***why*** a POSITA would have been motivated to modify Mehta's step-motor to include such a feature.

111. To the extent Petitioner proposes modifying Mehta's user interface to "provide input to select a distance of needle extension" (Pet. 40) a POSITA would not have been motivated to modify Mehta to add a "distance setting." Doing so would only increase the variation in "actual depth" and thus the likelihood that the probes would not be at the "desired depth" that the physician intended to achieve based on the physician's choice of cartridge, which is what Mehta discloses. Moreover, Mehta discloses a way of confirming the location of the needles after

deployment to determine if they reached the target tissue. There is no need to have both a selection of needle extension distance and confirmation of the location of the extended needle after deployment.

112. Mehta is directed to minimizing the variance associated with different needle insertions, recognizing that this variation affects the actual insertion depth, and providing information to the physician to compare the actual to desired depth so that the physician can make adjustments accordingly. Mehta discloses a "tissue engagement surface" that provides a "consistent starting point" to try to minimize "undesirable outcomes" where probes 104 "may be advanced too far or may not be advanced far enough." Ex. 1006 (Mehta), 21:10-16. Recognizing that variation in probe depth will still occur, Mehta discloses ways for a physician to compare "actual depth" to the "desired depth" and other ways of tracking insertion depth, as Petitioner acknowledges. Pet. 28. Modify Mehta to add a "distance setting" would unnecessarily increase not only the complexity of the system, but also the variation in the depth of the probes. *Id*.

113. Mehta was aware of distance control, but did not rely on that approach. For example, Mehta cites a number of prior art references that disclosed distance control, including U.S. Patent. No. 6,277,116 to Utely ("Utely"), cited in the Background of Mehta, and U.S. Patent Application No. 2002/0120261 to Morris ("Morris '261") (Ex. 2120). Utely discloses a controller that can "establish

and maintain a control depth" that can be "set by the physician." Ex. 2119 (Utely), 11:27-31. Morris discloses electrodes that can be "advanced to a selected deployment depth." Ex. 2120 (Morris '261), Abstract. Rather than relying on distance control, Mehta teaches using a different approach to minimize depth variation in the first instance and allows the physician to address undesired insertion depth.

114. Understanding that selection of probe depth was known, Mehta chose to teach a different approach to ensure that energy would be delivered to "a predetermined target area while minimizing delivery of energy to undesired region of tissue." Ex. 1006 (Mehta), 2:10-12. Specifically, Mehta teaches how to insert probes consistently and how to measure and validate probe placement before delivering energy, to ensure it is delivered at the intended location in the tissue. *E.g., id.*, 12:1-4 (ultrasound "to assess the penetration depth of the electrodes"), 21:10-12 ("a consistent starting point for the probes"), 32:46-57 ("virtual depiction … of the depth"), 39:33-36 ("impedance measurements to precisely determine depth of placement of the active electrode portion"). Mehta thus addressed the problem of "controlling needle insertion depth" in a different way than the prior art methods of selecting among variable insertion depths for a particular set of needles.

115. Modifying Mehta as Petitioner proposes would not lead to "superior outcomes" of treatment and "decrease costs" because doing so would only add unnecessary variance to the treatment and complexity to the system, and increase costs by adding additional components. Furthermore, adding other controls such as depth and rate of repetitive reciprocating motion to Mehta would have made an already cluttered GUI even more cluttered (Ex. 1006, Figs 10E and 10F), leading to increased risk of user error – exactly the opposite of Mehta's intent.

2. Mehta does not teach or suggest the embedded LED to illuminate the needle module or needle assembly limitations of claims 4 and 17, respectively

116. Claims 4 depends on claims 1-3 and requires that "the user holdable device proximal end further includes at least one embedded LED and further including energizing the at least one embedded LED so that the at least one embedded LED illuminates the releasably couplable deployable needle module" Ex. 1001, cl. 4. Similarly, claim 17 depends on claim 12 and further requires that "the user holdable device proximal end and the apparatus further including a photonic signal generator electrically coupled to the at least one embedded LED, the at least one embedded LED capable of illuminating the releasably couplable deployable needle assembly when energized." Ex. 1001, cl. 17. Mehta nowhere disclose an LED embedded in the proximal end of the user holdable device that illuminates the deployable needle assembly or module when energized.

117. Petitioner contends that "Mehta discloses light sources at the proximal end of handpiece 210 and a photonic signal generator electrically coupled to the light sources at the proximal end of handpiece 210" (Pet. 43) and points to Mehta's disclosures at 11:27-33. But those portions of Mehta simply disclose that "radiant energy may be supplied by the energy source/supply 90 that is coupled to a diode, fiber, or other emitter at the distal end of the treatment unit 202. In one variation, the energy source/supply 94 and associated energy transfer element may comprise laser, light or other similar types of radiant energy (e.g., visible, ultraviolet, or infrared light)." Ex. 1006, 11:27-33. Mehta discloses nothing about an LED embedded on the proximal end of the handpiece to illuminate the needle module or assembly.

118. Petitioner argues that a POSITA would been motivated to illuminate the needles with an LED, and that a motivation to do so "would have been to assist a physician in confirming the intended treatment area or to illuminate the depth markings or other distinguishing features." Pet. 44-45. I disagree. Mehta already discloses different means for confirming the treatment area. For example, Mehta includes marking lumens to "allow[] the practitioner to place a mark at the treatment location to avoid excessive treatments." Ex. 1006, 23:36-42. Mehta also discloses "a window located between the stabilization plate and the tissue engaging surface, where the window is configured to permit direct visualization of

advancement of the energy transfer elements into the entry point." *Id*., 4:19-23. And as I discuss in other portions of my declaration, Mehta further discloses a virtual depth/location depiction 350 system that can be used to confirm the location of the probes. *Id.*, 32:63-33:3. In my opinion, a POSITA would not have been motivated to add an LED to Mehta, much less in the proximal end of the handpiece to illuminate the needle module or needle assembly because Mehta already discloses other ways to confirm that the probes are located in the intended treatment area.

119. Petitioner also argues that "embedding LEDs in the proximal end of Mehta's handpiece 210 would have been an obvious design choice" and "a matter of routine engineering." Pet. 44. I also disagree. The claims do not just require embedding an LED in the proximal end of the handpiece, but further that such an LED illuminate the needle assembly or module. I do not believe adding an LED to Mehta to meet the requirements of the claims would be routine engineering.

120. Mehta discloses an electrode assembly 102 (shown in blue) that is within a removable cartridge 100 (shown in green), both of which are inserted into the device body 210 (shown in purple). Ex. 1006, Figs. 2B and 2D (annotated below).

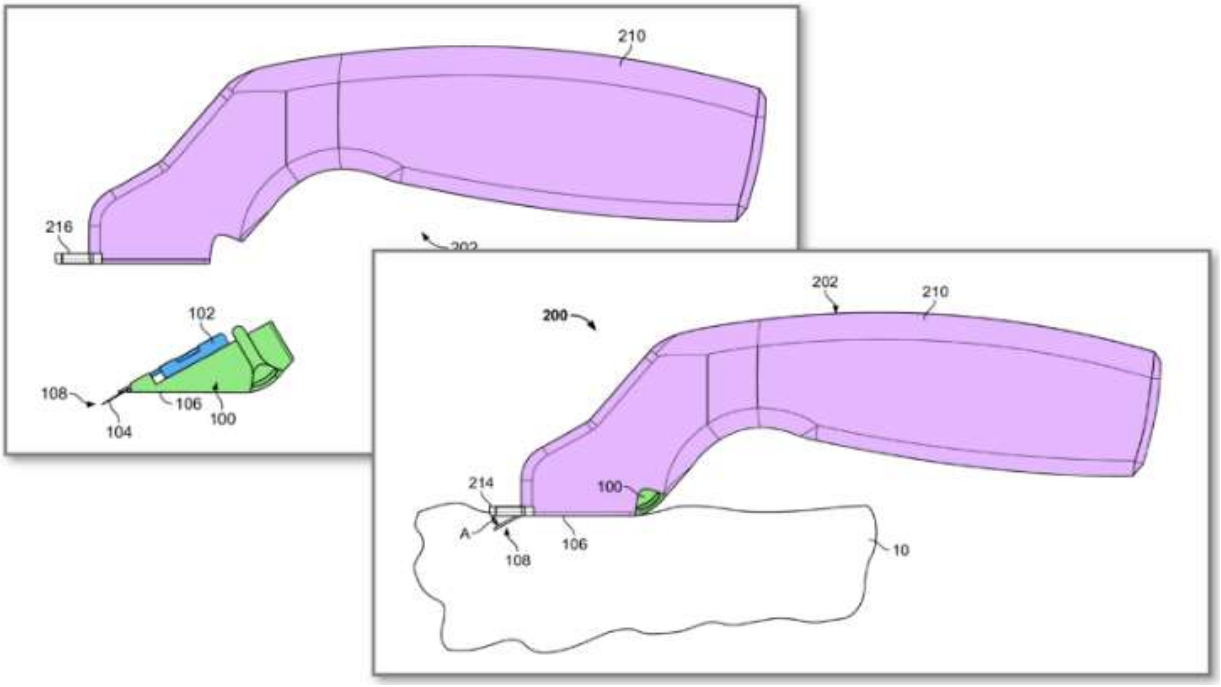

121. I understand that, according to Dr. Woloszko, the LED would be embedded in the vicinity of element 216, which Mehta describes as a window. Ex. 2148 (Woloszko ITC 9.15.2023 Dep. Tr.), 416:11-19. I do not agree with his opinion. Even if an LED would be included in that area, that LED would not illuminate the needle assembly 102 or the cartridge 100 of Mehta because those components are entirely within the device body 210. Therefore, in my opinion, adding an LED in the vicinity of the window 216 would not illuminate either needle assembly 102 or the cartridge 100. To illuminate Mehta's needle assembly 102 or cartridge 100 with an LED embedded in the handpiece in the vicinity of the window 216, either the handpiece, needle assembly, and cartridge would need to be transparent or the entire handpiece, needle assembly, and cartridge of Mehta

would have to be redesigned. Making the handpiece, needle assembly, or cartridge transparent would expose the internal components of the device, including the motor and wiring. This is contrary to good medical device design, as it would not only be aesthetically unpleasing but could potentially be scary looking for the patient. There are very few medical devices with a transparent handpiece to allow visualization of the internal mechanism. For example, hypodermic syringes are often transparent because it is important for the physician to monitor fluid delivery and to make sure there are no bubbles in the fluid being injected. However, in the context of RF microneedling devices, there would be no need to make the handle transparent as there is nothing for the user or physician to monitor. Thus, in my opinion a POSITA would not be motivated to modify Mehta in that manner, particularly when Mehta already teaches other means to confirm the treatment area.

3. Mehta does not teach or suggest the translucent section of claim 5

122. Claim 5, which depends on claims 1-4, recites "wherein the needle assembly includes a translucent section and further including energizing the at least one embedded LED to illuminate the plurality of needles via the needle assembly translucent section." Ex. 1001, cl. 5. Mehta does not describe the electrode assembly 102 or any portion of the removable cartridge 100 as transparent or translucent. The only portion of the device that Mehta discloses as transparent is the stabilization plate 214 or the cooling surface. Ex.1006, 13:16-23; 22:65-23:10.

But those portions are ***not*** part of the needle assembly as the claims require. Annotated Figures 2D and 2B of Mehta shown below illustrate that neither the stabilization plate 214 (in yellow) nor feature 216 (in pink) are part of the electrode assembly 102 (in blue). Those components are not even exposed to the electrode assembly 102.

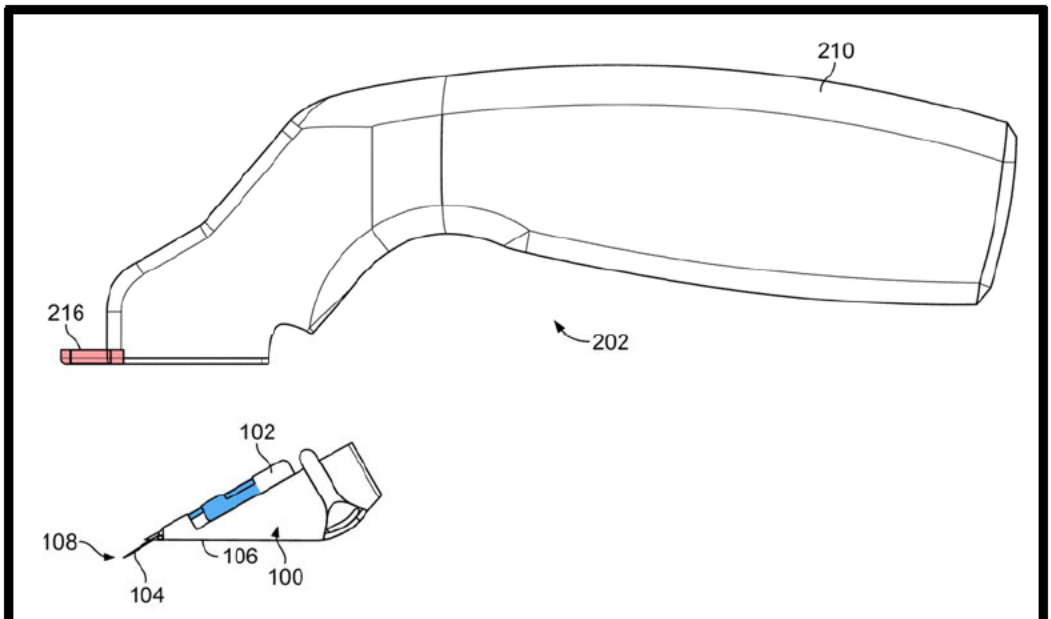

FIG. 2D

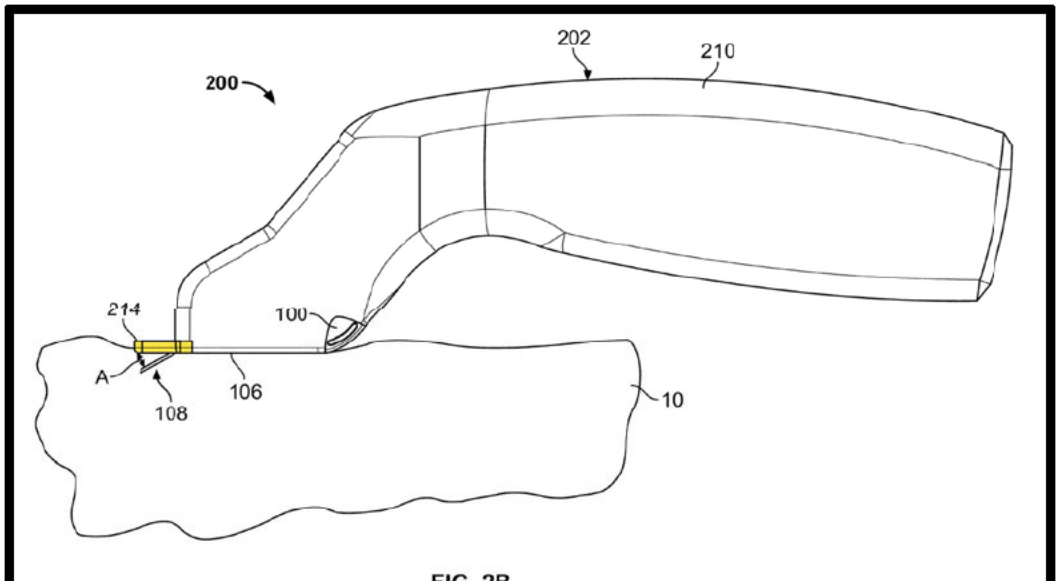

FIG. 2B

123. Petitioner argues that "[t]he motivation for using translucent material would have been to (i) prevent an opaque material from shading the tissue to be treated from illumination and (ii) further enhance the visual appearance of the device 202 by utilizing a material that would provide for diffuse reflection and transmission of the illuminating light provided by the LED and thereby create a visually-appealing glow." Pet. 46. I disagree. As I explained above, the needle assembly 102 and cartridge 100 are enclosed entirely within body portion 210. Nowhere does Mehta describe (and nowhere could I find that Petitioner or its expert argued) that the handle in Mehta is transparent or translucent. Therefore, in any illumination by an LED in the proximal end of Mehta's handle would be blocked by the opaque handle body and therefore not communicated to the plurality of needles via the needle assembly translucent section, which is what the claims require. Further, similar to my analysis above, I do not believe a POSITA would be motivated to make the electrode assembly 102, cartridge 100, or the body portion 210 of the handle transparent or translucent. In fact choosing transparent or translucent materials would require a complete device redesign because of the different strength of materials of transparent or translucent plastic compared to metal or other materials. As an initial matter, doing so would expose the internal components of the handle, including the motor, wires, fasteners, etc., to be visible to the user. This would lead to an unaesthetically and potentially scary looking

device. Further, there would be no reason for making such components translucent or transparent. As I explained above, Mehta already discloses several means to confirm the treatment area. Thus, a POSITA would not be motivated to redesign Mehta as Petitioner contends to include LEDs and transparent components that would lead to an unappealing device to arrive at the claimed invention.

C. GROUND III– Claims 4-5 and 17 are not obvious over Mehta in view of Na '848 and the knowledge of a POSITA

124. Claims 4 and 5 depend on claim 2, which recites needles that extend a "desired distance." Ex. 1001, cl. 2. For the same reasons I explain above, Mehta does not disclose the claimed "desired distance." *See* Section VIII.A, *supra*. Neither does Na '848. In fact, Petitioner does not argue or suggest that Na '848 teaches the claimed desired distance. Instead, Petitioner relies on that reference for the disclosure of an LED and translucent section on the needle assembly. Pet. 49-52. In my opinion, however, Petitioner has not shown that dependent claims 4-5 would have been obvious in view of Metha and Na '848.

125. As I explain above, Mehta does not disclose the limitations of claims 4-5 and 17, and neither does Na '848. With respect to the LED limitations, the claims require that the LED be embedded on the proximal end of the handpiece. Ex. 1001, cls., 4, 5, and 17. While Na '848 discloses LED, they are located on plate or roller 200, 350, or 450 (Ex. 1007, ¶ 34), neither of which is part of the handpiece. Therefore, neither Mehta nor Na '848 disclose the embedded LED in

the proximal end of the handpiece that the claims require. With respect to the translucent section limitation of the needle assembly, the claims require that it the needle assembly "mechanically separabl[e] from the user holdable device proximal end" and that "the plurality of needles" extend from an end surface. "Ex. 1001, cl. 1. Petitioner relies on the portions of Na '848 disclosing that "the pin section 250, 353, may be translucent." Ex. 1007, ¶ 35. But as shown in Figures 1C and 2F, those sections are not part of any kind of needle assembly that is "mechanically separabl[e] from the user holdable device proximal end" as the claims require. In fact, nowhere does Na '848 disclose that the plate or roller can be mechanically separable from the handle or that the plate or roller includes needles that extend from an end surface. Therefore, that the pin section of the plate in the Na '848 device can be translucent is not enough to meet the limitation of claim 5.

126. Moreover, in my opinion, a POSITA would not be motivated to combine Mehta and Na '848 to arrive at the claimed inventions. Important and crucial differences exist in the purpose, design, and operation of Mehta and Na '848 that would not lead a POSITA to combine them in order to arrive at the claimed invention. Specifically, Mehta is directed to and focused on applying energy to the tissue and teaches "improved systems and methods of percutaneously delivering energy to tissue where the systems and methods enable a physician (or other medical practitioner) to precisely control the areas or region of tissue that

receives energy." Ex. 1006, Title and 2:37-41; *see also id*., 3:42-44. To do so, Mehta discloses several ways to confirm the location of the probes after insertion to ensure energy is not delivered to an unintended location. *Id.*, 15:65-16:11. Some of the ways in which Mehta confirms probe location include using ultrasound "to assess the penetration depth of the electrodes" (*id*., 12:1-4), employing "a consistent starting point for the probes" (*id*., 21:10-12), using a "virtual depiction … of the depth" of the needles (*id*., 32:46-57) and taking "impedance measurements to precisely determine depth of placement of the active electrode portion." *Id*., 39:33-36. On the other hand, Na '848 is an acupuncture-type device used "to create a plurality of micro-wounds or holes in dermalogical [*sic*] layers of" skin. Ex. 1007, ¶ 25. Na '848 does not disclose delivering electrical energy to the skin, but rather only discloses vibrating the needles. Ex. 1007, ¶¶28-29. Thus, in the Na '848 device there is no need to confirm the location of the needles once they penetrate tissue because no electrical energy will be delivered via the needles.

127. Also, for the same reasons I discuss above regarding Ground II, a POSITA would not be motivated to embed an LED in the proximal end of Mehta to illuminate the needle assembly or module as required by claims 4 and 17. Section XI.B.2. And even if a POSITA were to look at Na '848 to modify Mehta (which I do not believe a POSITA would for the reasons I mention above), Na '848 does not disclose an LED in the proximal end of the handpiece, which is what the

claims require. And as for claim 5, again, neither Mehta nor Na '848 teach "embedded LED to illuminate the plurality of needles via the needle assembly translucent section," and in my opinion that combination does not either. Moreover, a POSITA would not have been motivated to combine Mehta and Na '848 to arrive at the claimed invention because, even if the needle assembly were made of translucent materials in Mehta, no light from an LED embedded in the proximal end of the handpiece would travel through that translucent material to illuminate the needles, which is what the claims require. Section XI.B.3. That light would be blocked by the opaque body unit and cartridge. Thus, the combination that Petitioner proposes does not achieve the inventions of claims 4-5 and 17.

D. GROUND IV – Claims 2-3, 6, 8, or 13-16 are not obvious in view of Mehta and Lee

128. In my opinion, Mehta in combination with Lee does not render claims 2-3, 6, 8, or 13-16 obvious at least because a POSITA would not have combined those references to achieve needles that extend a "desired distance" from the needle module or the needle assembly end surface as required by the claims. Ex. 1001 ('812 Patent), cls. 2, 8, and 13.

129. Petitioner argues "A POSA would have been motivated to modify Mehta in view of Lee to precisely control a needle extension distance along the

axis of extension and thereby gain benefits taught by both Mehta and Lee.…." Pet. 55. I disagree.

130. Important and crucial differences exist in the purpose, design, and operation of Mehta and Lee that would not lead a POSITA to combine them in order to arrive at the claimed invention. Specifically, Mehta is directed to and focused on applying energy to the tissue and teaches "improved systems and methods of percutaneously delivering energy to tissue where the systems and methods enable a physician (or other medical practitioner) to precisely control the areas or region of tissue that receives energy." Ex. 1004, Title and 2:37-41; *see also id*., 3:42-44. To do so, Mehta discloses several ways to confirm the location of the probes after insertion to ensure energy is not delivered to an unintended location. *Id.*, 15:65-16:11. Some of the ways in which Mehta conforms probe location include using ultrasound "to assess the penetration depth of the electrodes" (*id*., 12:1-4), employing "a consistent starting point for the probes" (*id*., 21:10-12), using a "virtual depiction … of the depth" of the needles (*id*., 32:46-57) and taking "impedance measurements to precisely determine depth of placement of the active electrode portion." *Id*., 39:33-36.

131. In contrast, Lee teaches a system for "performing multi-hole procedures" at rapid speeds where the system "can create hundreds to tens of thousands of holes on the human skin with a gun equipped with a plurality of

microneedle." Ex. 1009, Abstract; *see id*. ¶15. Lee does not teach delivering energy via the needles to the tissue. And while Lee teaches a treatment method that is "simple and safe as well as free of side effects" (Ex. 1009, ¶17), Mehta is directed toward delivery of RF energy, which as even Mehta explains "creates the risk of unwanted collateral damage to the skin" (Ex. 1006, 2:1-2), such as "burns and/or scars." *Id*., 8:52-53. These are important and crucial differences in the two systems that would not lead a POSITA to look at Lee to modify Mehta as Petitioner proposes.

132. I also do not believe a POSITA would have a high likelihood of success to arrive at the claimed invention if he or she were to combine Mehta and Lee. Again, Mehta teaches inserting needles into the skin, using various means of confirming they are in the target region, and delivering energy to the target region for a period of time. In contrast, Lee teaches creating "hundreds to tens of thousands of holes on the human skin." Ex. 1011, Abstract. Lee is concerned with speed—not with confirming the location of the needles after insertion because energy is not delivered via the needles.

133. Mehta explains that the therapeutic treatment delivered to the skin involves "thermally denaturing the collagen in the dermal layer of a target area" and to do so "the system can maintain a temperature of the target site at a pre-determined treatment temperature during a pre-determined cycle or dwell time . . .

Once the target site reaches the treatment temperature, the system then maintains this condition for the cycle or dwell time." Ex. 1004 , 19:17-19 and 19:45-51. Thus, Mehta discloses applying energy to reach a particular temperature and maintaining it for a period of time. That period of time can vary, but Mehta discloses using at least 1 second for such treatment,

134. For example, one study Mehta describes for this therapeutic treatment involved adjusting the temperature and time, using at least 1 second just for treatment— after the needles were inserted and the user confirms the needles are at the desired location:

> The temperature in the above example was adjusted from 60 to 80° C. and the time-at-temperature was adjusted from 1.5 to 25 seconds. During a later phase of the study, the treatment temperature was held at 70° C. using the system described above and the time-at-temperature was set to 1, 4, or 7 second(s). A higher temperature setting of 78°C. for 4 seconds was also used toward the end of the study with excellent clinical results and safety profile

Ex. 1004, 37:17-24. Mehta's figures are consistent, showing treatment times of 5 seconds. *Id.*, Figs. 10E and 10F.

135. In Lee, there would be no time for the system to deploy the needles into the skin, check their location, and deliver RF energy to treat the target tissue before retracting them, as Mehta teaches. Specifically, Lee is directed toward "a method of creating holes on the skin by using the repetitive, reciprocating operation

of the actuator" Ex. 1011 (Lee), ¶20 "at a speed of about 66-420 times per minute." Ex. 1011 (Lee), ¶58. At the lowest speed in that range, Lee's needles penetrate skin every 0.9 seconds and at the fastest setting every 0.14 seconds. Lee does not disclose—and there is simply not enough time—to check the location of the already-inserted needles with the observation or measurement means, adjust their location if needed, and then deliver RF energy before retracting the needles, which is what Mehta teaches. Therefore, the teachings of Lee are inconsistent with those of Mehta and a POSITA would not look to Lee to modify Mehta as Petitioner proposes.

136. Furthermore, the user action with Lee and Mehta are quite different. In Lee, "the actuator may be set in such a manner that it performs one reciprocating operation each time the switch is pressed; or actuator performs multiple reciprocating operations while holding the switch pressed." Ex. 1011 (Lee), ¶65. Such an action would be impossible with Mehta, because each insertion of the needles requires confirmation of the correct location before energy delivery is initiated by the user.

137. Modifying Mehta to include Lee's stepper motor would not meet the claim requirements. As an initial matter, Mehta itself already discloses a stepper motor. Ex. 1006 (Mehta), 15:34-40 ("[t]he mode of movement of the actuator can include … stepping (via an step-motor)"). And as I opine when addressing Ground

I, Mehta does not teach or suggest a programming how far the needles extend and replacing Mehta's stepper motor with Lee's stepper motor also does not meet the claims because this combination lacks any teaching of a user selecting how far the needles extend.

138. Importantly, Mehta is directed to minimizing variability in needle insertion. Mehta recognizes that this variation affects the actual insertion depth of the needles and teaches a way to provide information to the physician to compare the actual to desired depth so that the physician can react accordingly. Specifically, Mehta discloses a "tissue engagement surface" that provides a "consistent starting point" to try to minimize "undesirable outcomes" where probes 104 "may be advanced too far or may not be advanced far enough." Ex. 1006 (Mehta), 21:10-16. Recognizing that variation in probe depth will still occur, Mehta discloses a number of ways for a physician to compare "actual depth" to the "desired depth" and other ways of tracking insertion depth. Adding a "distance setting" to Mehta in view of Lee would only increase the variation in "actual depth" by, for example, adding another variable to needle insertion, and thus the likelihood that the probes would not be at the "desired depth" that the physician intended to achieve based on the physician's choice of cartridge.

139. Mehta is directed towards treating tissue with a method to verify the probes are in the target tissue to be treated for each insertion. In Mehta, the probes

are inserted to a constant distance (determined by the choice of probe cartridge), measurements are obtained after the probes are inserted and the results are displayed on a screen. If the probes are in the target tissue, energy is delivered, and then the probes are retracted. The physician would use the measurements to reposition the probe if necessary. In my opinion, it would be impossible to make the measurements, display the results, have the physician make a decision on those results, and if necessary reposition the probe in less than a second – and certainly not in 140 ms.

140. Therefore, a POSITA would not be motivated to combine a repetitive reciprocating mechanism to provide a controlled depth of needle insertion with a method to verify the needle depth at every insertion. Despite the lack of motivation, even if the mechanisms were combined, there is no reasonable expectation of success for the reasons discussed above. Further, even if the depth of the probe insertion could be controlled in Mehta, doing so would not have addressed the problem Mehta was attempting to solve because there would still be a need to determine of those probes reached the target region to ensure energy would not be delivered to an undesired location as Mehta explains. The purpose is to minimize energy delivery to unintended regions of the tissue. Thus, a POSITA would not have been motivated to combine the already complex system of Mehta with the depth control mechanism of Lee. Doing so would have increased the cost of the

system due to, for example, additional parts to control and program the motor even though the mechanisms in Mehta for probe location would still have to be utilized to perform its intended function. Furthermore, adding other controls such as depth and rate of repetitive reciprocating motion to Mehta would have made an already cluttered GUI even more cluttered (Ex. 1006 (Mehta), Figs 10E and 10F), leading to increased risk of user error – exactly the opposite of Mehta's intent.

141. Further, as I explain above, Mehta was aware of distance control (Ex. 2119 (Utely), 11:27-31; Ex. 2120 (Morris), Abstract; *supra* Section VIII.B) and disclosed a different approach. Mehta is directed to minimizing the variance associated with different needle insertions, recognizing that this variation affects the actual insertion depth, and providing information to the physician to compare the actual to desired depth so that the physician can make adjustments accordingly. *See supra* Section IX.B.1. A POSITA would not have been motivated to modify Mehta to add a "distance setting" in view of Lee because that would only increase the variation in "actual depth" and thus the likelihood that the probes would not be at the "desired depth" that the physician intended to achieve based on the physician's choice of cartridge. *Id*. Further, assuming that rapidly inserted needles would be inserted to the right depth before delivering energy would conflict with Mehta's teachings. In fact, the various mechanisms that Mehta taches to confirm the location of the already-inserted probes would be rendered useless if it was

combined with the Lee system because there would be no time to use them. Thus, in my opinion a POSITA would not combine the teachings of Lee and Mehta to arrive at the claimed inventions.

E. GROUND V – Claims 4-5 and 14-15 are not obvious in view of Mehta, Lee, Na '848 and the knowledge of a POSITA

142. For this ground, Petitioner merely incorporates by reference its arguments for the Mehta-Lee combination as well as the Mehta-Na '848 combination. Pet. 57-58. For the same reasons I explain above, in my opinion, a POSITA would not have been motivated to combine Mehta, Lee, Na '848 and his/her knowledge to arrive at claims 4-5 of the '812 Patent.

F. GROUND VI – Claims 9 and 18 are not obvious in view of Mehta, Livneh, and the knowledge of a POSITA

143. In my opinion, the combination of Livneh, Mehta, and the knowledge of a POSITA does not render claims 9 and 18 obvious.

144. Claims 9 and 18 depend in claims 1 and 12, respectively, and therefore require a "releasably couplable deployable needle module" that is "mechanically separabl[e] from the user holdable device." Ex. 1001, cls. 1 and 12. Livneh does not teach a releasably couplable deployable needle module or a needle module that is mechanically separable from any portion of the Livneh device, much less a user holdable device. Petitioner relies on housing 36 of Livneh to argue it discloses a needle module and on handle portion 38 of Livneh to argue it discloses a user

holdable device. Pet. 60. But Livneh teaches that "[t]he housing 36 is ***connected*** to a handle portion 38." Ex, 1010 (Livneh) [0033]. Nowhere in Livneh us there is there a disclosure, teaching, or suggestion that the housing 36 is releasably couplable nor mechanically separable from the handle portion 38. Petitioner proposes a "Modified Livneh Device" and "Modified Livneh Method" based on the teachings of Mehta and argue that "A POSA would have been motivated to make the connection between the housing and the handle portion in Livneh releasably couplable, as taught by Mehta." Pet. 61. I disagree.

145. For its proposed Modified Livneh Device, Petitioner relies on "retention fasteners 114" in Mehta's cartridge and argue that a POSITA would modify Livneh to "make the connection between the needle module and the handle portion releasably couplable in light of Mehta's teaching of a removable needle module." Pet. 60. I disagree. If the "retention fasteners 114" of Mehta were included in the Livneh device, they would have to be included where housing 36 connects to handle portion 38. I created the annotated Figure below showing in red where the fasteners would need to be located.

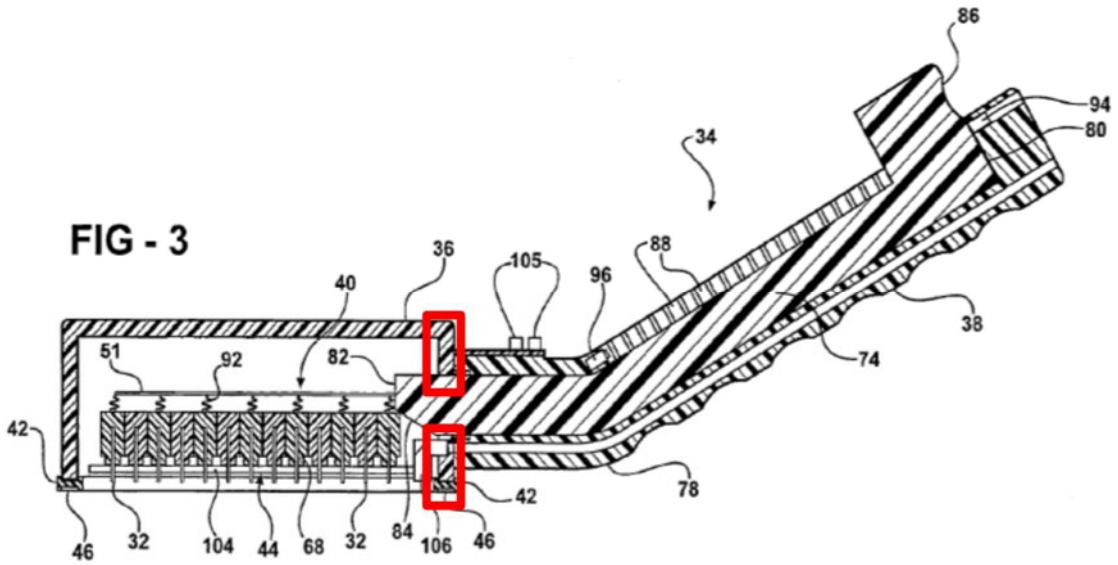

Figure 1 - Figure 3 of Ex. 1010 (Livneh) modified

146. If housing 36 were modified to be releasably couplable, as Petitioner contends, mechanism 74 exposed would be exposed. This could lead to potential damage to mechanism 74 and therefore lack of engagement with the electrodes to move them from a first to a second position as taught in Livneh. Specifically, Livneh teaches that electrodes 32 move between a first and second position and, mechanism 74 "operatively engag[es] with electrodes 32 for moving them between the first and second positions." Ex. 1010 (Livneh) [0042]. [0043]. "The mechanism 74 includes a proximal end 80 and a distal end 82. The distal end 82 is tapered to provide an angled surface 84 for operatively engaging the electrodes 32 as the mechanism 74 is moved from the first position to the second position." *Id.*, [0045]. Leaving mechanism 74 exposed by coupling and decoupling housing 36 from the handle portion 38 could risk damage to the angled surface and therefore,

improper or complete lack of engagement with electrodes 32, which is contrary to the purpose of Livneh. *Id*., [0002] ("the preset invention provides an apparatus and method for introducing . . . mechanical injury to skin via electrodes.") Thus, a POSITA would not be motivated to modify Livneh to make housing 36 releasably couplable from handle portion 38, as Petitioner proposes.

147. Also, even if a POSITA were to modify Livneh to include "retention fasteners", housing 36 and handle portion 38 would still be electrically connected. I disagree that "[m]aking the needle module in Livneh releasably couplable to the handle portion would have been a matter of routine engineering" (Pet. 63), as Petitioner contends. Nowhere has Petitioner explained how a POSITA would modify the wires and electrical connections in Livneh to arrive at the claimed invention. Nowhere has Petitioner explained what modifications would need to be made not just to the housing 36 and handle portion 38, but to the electrode carrier and its components, including wires 52, coils 92, combs 62, holder 68, and others. Ex. 1010 [0048]. In my opinion, that is particularly relevant here because the claims require that "at least one electrical contact of the needle assembly remains electrically coupled to at least one electrical contact of the user holdable device proximal end" while the needle assembly moves within the needle module. Ex. 1001 cls. 1 and 12. state that "there must be at least one electrical contact disposed on the proximal end of the handle portion such that, when the device is coupled

thereto, said at least one electrical contact contacts a corresponding at least one electrical contact disposed on the needle module or a component thereof." Pet. 70-71. But nowhere does Petitioner contend or explain why the electrical contact would be located in the proximal end of the user holdable device versus in another portion.

148. In arguing for motivations to combine Livneh and Mehta, Petitioner argues that "[a] POSA would also have been motivated to use detachable needle cartridges to easily replace damaged or contaminated needles" (Pet. 61). But Livneh already discloses replaceable needles in a non-releasably couplable needle module, which Petitioner acknowledges. If needles in the cartridges were damaged, replacing a single needle (or even a comb of needles) would be more cost effective than replacing an entire needle module with the full array of needles. Therefore, I do not agree with Petitioner that a POSITA would have been motivated to modify Livneh to include a releasably couplable needle module to replace damaged or contaminated needles, particularly in light of the teachings of Mehta. I also disagree with Petitioner's expert that modifying Livneh in view of Mehta to include a detachable needle cartridge would resolve the need to "autoclave the entire handpiece after each use for sterilization." Ex. 1003 (Berube Decl.), ¶210. In Mehta, portions of the handpiece, like stabilization plate 214, make contact with tissue (e.g., Ex. 1006, 10:40-52) and would need to be sterilized regardless of

whether the cartridge in the device is removable. Moreover, because the entire cartridge in Mehta is located within the body of the handpiece (as I explain above), patient material could reach the inside of the handpiece when the device is used for treatment. Therefore, there would still be a need to "autoclave the entire handpiece after each use for sterilization" in Mehta. In my opinion, a POSITA would not have been motivated to modify Livneh in view if Mehta as Petitioner and its expert contend to address any issues of contamination or sterilization.

149. Modifying Livneh as Petitioner proposes would not lead to the limitations of claims 9 and 18, which require that at least one of the electrical contacts include a "pin that is extendable in the same direction as the needles." Ex. 1001, cls. 9 and 18. Petitioner does not appear to argue that Mehta satisfies that limitation as they do not rely on anticipation or obviousness based on Mehta alone for claims 9 or 18. *See, e.g.*, Grounds I and II. Instead, Petitioner relies on coil 92 of Livneh, but coils and pins are different, and those differences are of particular relevance here. Contrary to Petitioner's contentions, coil 92 of Linveh does not "operate[] in the same manner and perform[] the same function" as the pin illustrated in the Figures of the '812 Patent. Pet. 75. For example, the coil 92 of Livneh can not only compress and decompress to allow the electrodes to move between and first and second position based on engagement of mechanism 74 (Ex. 1010 [0049]), it also has to have flexibility in the longitudinal direction to allow

mechanism 74 to push on the coils as it deploys and retracts. Therefore, coil 92 is designed to have at least 3 degrees of freedom of movement. A pin, on the other hand, would be designed to only have 1 degree of freedom of movement: compression and decompression to allow the electrodes to move between and first and second position. But a pin would not have flexibility to move in the longitudinal direction as coil 92. Therefore, when mechanism 74 deploys and retracts, it could damage the pins, leading to improper engagement or lack of engagement with the electrodes. Thus, a POSITA would not be motivated to replace Livneh's coils with a pin.

150. Furthermore, a pin (such as a pogo pin described as an example in '812 Patent specification) is designed to *compress* to maintain an electrical connection during relative movement. But Livneh teaches "the coil 92 in the second embodiment functions to return the electrodes 32 to the first position after retreat of the electrode positioning mechanism 74. Likewise, the coil 92 serves as the electrical contact between the conductive strip 124 and the wire 51, as shown in Figure 18." (Ex 1010 [0063]) The coil in Livneh provides mechanical *tension* to return the electrodes to the first position, *as well as* providing electrical connection. These two functions are not possible with a pin connection (like a pogo pin) as described in '812 Patent.

X. OBJECTIVE INDICIA OF SECONDARY CONSIDERATIONS

A. The Sylfirm X practices the claims of the '812 Patent

151. I served as an expert for Patent Owner during the 1356 Investigation, where I provided opinions on a number of issues, including validity of the '812 Patent as well as practice of that patent by various products. One of those products is the Sylfirm X, [redacted]. As part of my analysis and rendering of my opinions regarding the Sylfirm X, I reviewed numerous documents for the product such as the user manual, brochures and other marketing and advertising documents, instructional videos, the 510k, and others. I also personally inspected the Sylfirm X and prepared an inspection report. *See generally* Ex. 2127 (Inspection Report) at 26-34. In my opinion, the Sylfirm X practices the claims of the '812 Patent. Below is exemplary analysis pertaining to claim 2, which shows the Sylfirm X practices at least that claim of the '812 Patent. Because claim 2 depends on claim 1, I also provide my analysis for claim 1.

1. '812 Patent, Claim 1

a. <u>"1[pre] A method of treating dermatological tissue, comprising:"</u>

152. It is my opinion the Sylfirm X performs the method of claim 1.

153. Patent Owner's documents confirm that the Sylfirm X practices this limitation. For example, a Sylfirm X User Manual shows it is an RF microneedling

system used to treat dermatological tissue. *See* Ex. 2083 (Sylfirm X User Manual), 4 ("The device is intended for coagulating skin tissue . . . ."); Ex. 2037 (Sylfirm X Brochure), 2 ("The world's first & only FDA registered Pulse Wave (PW) and Continuous Wave (CW) Radio Frequency Micro Needling device featuring 300 Micron depth targeting both skin laxity and pigmentation for ultimate skin rejuvenation.")

154. Deposition testimony of the '812 Patent inventor, Dr. Jongju Na, confirms the Sylfirm X practices this limitation. For example, Dr. Na testified that the Sylfirm X "is one of [the] RF microneedling device." *See, e.g.*, Ex. 2128 (July 25, 2023 Na Dep. Tr.), 202:13-15.

155. I personally inspected the Sylfirm X and confirmed it practices this limitation. *See* Ex. 2127 (Inspection Report).

b. "1[a1] placing a user holdable device releasably couplable deployable needle module end surface on or near dermatological tissue to be treated, the user holdable device including a proximal end and the releasably couplable deployable needle module,"

156. It is my opinion that the Sylfirm X practices this limitation.

157. The Sylfirm X practices this limitation because the products can be used by placing a user holdable device releasably couplable deployable needle module end surface on or near dermatological tissue to be treated, where the user

holdable device including a proximal end and the releasably couplable deployable needle module.

158. Patent Owner's documents confirm as much. For example, a Sylfirm X video shows when treating dermatological tissue, a user holdable device includes a needle module that is releasably couplable and deployable, and its end surface is placed on or near dermatological tissue to be treated. *See* Ex. 2097 (Sylfirm X Instructional Video). Photos of the Sylfirm X show the user holdable device that includes a proximal end and a releasably couplable deployable needle module. Ex. 2086 (Sylfirm X Photos), 7-11.

159. I personally inspected the Sylfirm X and confirmed it practices this limitation. *See* Ex. 2127 (Inspection Report).

c. "1[a2] the releasably couplable deployable needle module mechanically separatably from the user holdable device proximal end and including a needle assembly including a plurality of needles,"

160. It is my opinion that the Sylfirm X performs a method which includes the releasably couplable deployable needle module mechanically separatably from the user holdable device proximal end and including a needle assembly including a plurality of needles.

161. The Sylfirm X practices this limitation because the needle module of the products mechanically attaches and separates from the proximal end of the user holdable device either directly or indirectly.

162. Patent Owner's documents confirm as much. For example, photos of the Sylfirm X show the needle module is mechanically separatably (separable) from the proximal end. Ex. 2086 (Sylfirm X Photos), 7-11. A Sylfirm X brochure shows the deployable needle assembly within the needle module that includes a plurality of needles that extend from the deployable needle module end surface. Ex. 2037 (Sylfirm X Brochure), 4, 11, 13. [redacted]; Ex. 2086 (Sylfirm X Photos), 2.

163. Deposition testimony of the '812 Patent inventor, Dr. Jongju Na, confirms the Sylfirm X practices this limitation. For example, Dr. Na testified that the Sylfirm X has needles that extend from the surface. *See, e.g.*, Ex. 2128 (July 25, 2023 Na Dep. Tr.), 249:7-22.

164. I personally inspected the Sylfirm X and confirmed it practices this limitation. *See* Ex. 2127 (Inspection Report).

d. <u>"1[a3] the needle assembly movable within the releasably couplable deployable needle module to extend the plurality of needles from the releasably couplable deployable needle assembly end surface while at least one electrical contact of the needle assembly remains electrically coupled to at least one</u>

<u>electrical contact of the user holdable device proximal end; and;"</u>

165. It is my opinion that the Sylfirm X performs a method which includes a needle assembly that is movable within the releasably couplable deployable needle module to extend the plurality of needles from the releasably couplable deployable needle assembly end surface while at least one electrical contact of the needle assembly remains electrically coupled to at least one electrical contact of the user holdable device proximal end; and.

166. Patent Owner's documents confirm as much. For example, photos of the Sylfirm X show the proximal end of the user holdable device includes at least one electrical contact, and the deployable needle assembly includes at least one electrical contact (i.e., Pogo pin), which is couplable to the proximal end at least one electrical contact. *See* Ex. 2086 (Sylfirm X Photos), 6-11. In use the needle assembly moves within the releasably couplable deployable needle module to extend the plurality of needles from the needle assembly end surface while the electrical contacts remain electrically coupled.

167. I personally inspected the Sylfirm X and confirmed it practices this limitation. *See* Ex. 2127 (Inspection Report).

e. "1[b] communicating electrical signals from the user holdable device proximal end to the needle assembly via the electrical contacts."

168. It is my opinion that the Sylfirm X performs a method which includes communicating electrical signals from the user holdable device proximal end to the needle assembly via the electrical contacts.

169. Patent Owner's documents confirm that the Sylfirm X practices this limitation. For example, a Sylfirm X brochure shows the product communicates electrical signals (using Pulsed Wave (PW) radio frequency signals or Continuous Wave (CW) radio frequency signals) from the proximal end to the plurality of the needles to treat dermatological tissue and maximize treatment results. *See* Ex. 2037 (Sylfirm X Brochure), 2. Photos of the Sylfirm X show the control panel and an RF signal generator are connected to the proximal end via an electrical cable. *See* Ex. 2086 (Sylfirm X Photos), 4; Ex. 2083 (Sylfirm X User Manual), 18.

170. Deposition testimony of the '812 Patent inventor, Dr. Jongju Na, confirms the Sylfirm X practices this limitation. For example, Dr. Na testified that the Sylfirm X generates a 2 MHz signal that is "delivered to the needles." *See, e.g.*, Ex. 2128 (July 25, 2023 Na Dep. Tr.), 205:22-206:5. Dr. Na testified also that there is a "device self-test to see whether signals are delivered correctly to the needles . . . " when the footswitch is pressed before the needles are extended to deliver RF. *See, e.g.*, *id.*, 216:2-217:10.

171. I personally inspected the Sylfirm X and confirmed it practices this limitation. *See* Ex. 2127 (Inspection Report).

2. '812 Patent, Claim 2

a. "The method of claim 1, further comprising energizing a motor coupled to the needle assembly to cause the plurality of the needles to extend a desired distance from the needle module end surface"

172. It is my opinion that the Sylfirm X performs a method which includes energizing a motor coupled to the needle assembly to cause the plurality of the needles to extend a desired distance from the needle module end surface.

173. Patent Owner's documents confirm that the Sylfirm X practices this limitation. For example, photos of the Sylfirm X show that it includes a motor coupled to the needle assembly and that the Sylfirm X energizes the motor to cause the plurality of needles to extend a desired distance from the needle module end surface. Ex. 2130 (Sylfirm X Photos), 3, 4.

174. Photos of the Sylfirm X show the desired distance is configured via the "Depth" setting in the user interface/control panel. Ex. 2086 (Sylfirm X Photos), 2-3. [redacted].

175. Deposition testimony of the '812 Patent inventor, Dr. Jongju Na, confirms the Sylfirm X practices this limitation. For example, Dr. Na testified that

the Sylfirm X has a motor in the handle to extend the plurality of needles. *See, e.g.*, Ex. 2128 (July 25, 2023 Na Dep. Tr.), 212:19-213:9.

176. I personally inspected the Sylfirm X and confirmed it practices this limitation. *See* Ex. 2127 (Inspection Report).

3. '812 Patent, Claim 12

a. <u>"12[pre] An apparatus for treating dermatological tissue, comprising:"</u>

177. It is my opinion the Sylfirm X meets the limitations of claim 12.

178. Patent Owner's documents confirm that the Sylfirm X practices this limitation. For example, a Sylfirm X User Manual shows it is an RF microneedling system used to treat dermatological tissue. *See* Ex. 2083 (Sylfirm X User Manual), 4 ("The device is intended for coagulating skin tissue . . . ."); Ex. 2037 (Sylfirm X Brochure), 2 ("The world's first & only FDA registered Pulse Wave (PW) and Continuous Wave (CW) Radio Frequency Micro Needling device featuring 300 Micron depth targeting both skin laxity and pigmentation for ultimate skin rejuvenation.")

179. Deposition testimony of the '812 Patent inventor, Dr. Jongju Na, confirms the Sylfirm X practices this limitation. For example, Dr. Na testified that the Sylfirm X "is one of [the] RF microneedling device." *See, e.g.*, Ex. 2128 (July 25, 2023 Na Dep. Tr.), 202:13-15.

180. I personally inspected the Sylfirm X and confirmed it practices this limitation. *See* Ex. 2127 (Inspection Report).

b. "12[a] a user holdable device including a proximal end and,"

181. It is my opinion that the Sylfirm X practices this limitation.

182. The Sylfirm X practices this limitation because the products include a user holdable device including a proximal end.

183. Patent Owner's documents confirm as much. For example, a Sylfirm X video shows a user holdable device. *See* Ex. 2097 (Sylfirm X Instructional Video). Photos of the Sylfirm X show the user holdable device that includes a proximal end. Ex. 2086 (Sylfirm X Photos), 7-11.

184. I personally inspected the Sylfirm X and confirmed it practices this limitation. *See* Ex. 2127 (Inspection Report).

c. "12[b1] a releasably couplable deployable needle module,"

185. It is my opinion that the Sylfirm X practices this limitation.

186. The Sylfirm X practices this limitation because the products include a releasably couplable deployable needle module.

187. Patent Owner's documents confirm as much. For example, a Sylfirm X video shows a releasably couplable deployable needle module. *See* Ex. 2097

(Sylfirm X Instructional Video). Photos of the Sylfirm X show a releasably couplable deployable needle module. Ex. 2086 (Sylfirm X Photos), 7-11.

188. I personally inspected the Sylfirm X and confirmed it practices this limitation. *See* Ex. 2127 (Inspection Report).

d. "12[b2] the releasably couplable deployable needle module mechanically separatably from the user holdable device proximal end and including a needle assembly including a plurality of needles,"

189. It is my opinion that the Sylfirm X includes the releasably couplable deployable needle module mechanically separatably from the user holdable device proximal end and including a needle assembly including a plurality of needles.

190. The Sylfirm X practices this limitation because the needle module of the products mechanically attaches and separates from the proximal end of the user holdable device either directly or indirectly.

191. Patent Owner's documents confirm as much. For example, photos of the Sylfirm X show the needle module is mechanically separatably (separable) from the proximal end. Ex. 2086 (Sylfirm X Photos), 7-11. A Sylfirm X brochure shows the deployable needle assembly within the needle module that includes a plurality of needles from the deployable needle module end surface. Ex. 2037 (Sylfirm X Brochure), 4, 11, 13. [redacted]

[redacted]; Ex. 2086 (Sylfirm X Photos), 2.

192. I personally inspected the Sylfirm X and confirmed it practices this limitation. *See* Ex. 2127 (Inspection Report).

e. "12[b3] the needle assembly movable within the releasably couplable deployable needle module to extend the plurality of needles from the releasably couplable deployable needle assembly end surface while at least one electrical contact of the needle assembly remains electrically coupled to at least one electrical contact of the user holdable device proximal end"

193. It is my opinion that the Sylfirm X includes a needle assembly that is movable within the releasably couplable deployable needle module to extend the plurality of needles from the releasably couplable deployable needle assembly end surface while at least one electrical contact of the needle assembly remains electrically coupled to at least one electrical contact of the user holdable device proximal end.

194. Patent Owner's documents confirm as much. For example, photos of the Sylfirm X show the proximal end of the user holdable device includes at least one electrical contact, and the deployable needle assembly includes at least one electrical contact (i.e., Pogo pin), which is couplable to the proximal end at least one electrical contact. *See* Ex. 2086 (Sylfirm X Photos), 6-11. In use the needle assembly moves within the releasably couplable deployable needle module to

extend the plurality of needles from the needle assembly end surface while the electrical contacts remain electrically coupled.

195. I personally inspected the Sylfirm X and confirmed it practices this limitation. *See* Ex. 2127 (Inspection Report).

4. '812 Patent, Claim 13

a. <u>"The apparatus of claim 12, further including a motor coupled to the needle assembly to extend the plurality of needles a desired distance from the releasably couplable deployable needle assembly end surface when the motor is energized with a particular signal"</u>

196. It is my opinion that the Sylfirm X includes a motor coupled to the needle assembly to extend the plurality of needles a desired distance from the releasably couplable deployable needle assembly end surface when the motor is energized with a particular signal.

197. Patent Owner's documents confirm that the Sylfirm X practices this limitation. For example, photos of the Sylfirm X show that it includes a motor coupled to the needle assembly and that the Sylfirm X's motor extends the plurality of needles a desired distance from the releasably couplable deployable needle assembly end surface when the motor is energized with a particular signal. Ex. 2130 (Sylfirm X Photos), 3, 4.

198. Photos of the Sylfirm X show the desired distance is configured via the "Depth" setting in the user interface/control panel. Ex. 2086 (Sylfirm X

Photos), 2-3. [redacted].

199. Deposition testimony of the '812 Patent inventor, Dr. Jongju Na, confirms the Sylfirm X practices this limitation. For example, Dr. Na testified that the Sylfirm X has a motor in the handle to extend the plurality of needles. *See, e.g.*, Ex. 2128 (July 25, 2023 Na Dep. Tr.), 212:19-213:9.

200. I personally inspected the Sylfirm X and confirmed it practices this limitation. *See* Ex. 2127 (Inspection Report).

B. The Claims at Issue Of The '812 Patent have achieved commercial success

201. The Sylfirm X has achieved great commercial success due to the claimed invention of the '812 Patent. Specifically, the '812 Patent claims involve extending a plurality of needles into the skin a desired distance based on user selection. The '812 Patent discloses how the motors of the system enable such precise needle extension depth control based on the distance the user selects. This is one of the main features of the '812 Patent and one of the features that is highlighted and touted in advertising and training materials for the Sylfirm X. For example, the Sylfirm X brochure highlights that "[t]reatment depth . . . [is] adjustable by the user" to deliver the "most accurate energy into the skin without any thermal damage to the skin surface" and also treating different medical

indications such as rosacea, melasma, and others. Ex. 2037 (Sylfirm X Brochure), 10, 13. [redacted]. Other marketing and training materials for the Sylfirm X also highlight the treatment benefits associated with implementing the technology claimed in the '812 Patent. Ex. 2066, 2-3 ("needle depth can be adjusted from 0.3-4.0mm so we can treat thin skin, as well as the body" and that "Sylfirm X appears to be the only RF device that accurately targets and treats at 0.3mm of skin depth."); Exs. 2039, 2079, 2083, 2084.

202. Whether a particular treatment is successful depends on precise placement of the coagulation in the tissue, which is achieved by the RF energy delivered through the needles. Thus, needle placement is crucial. If the needles are inserted too deeply, the treatment could have an adverse consequence. Thus, "the desired distance" as claimed in the '812 Patent allows more indications for these products to treat more types of patients, which is a deciding factor in purchasing decisions.

203. I reviewed the declaration of Vince Thomas and I understand that the Sylfirm X has been commercially successful. Ex. 2141 (Thomas Decl.) ¶¶ 1, 14-15. In my opinion, these products have achieved commercial success due to inventive combinations of the '812 Patent claims.

C. The Inventions of the Claims of '812 Patent have received industry praise

204. Extending needles a desired distance and a mechanism for precise needle depth control as claimed in the '812 Patent and the products implementing the inventions have received industry praise and recognition. For example, medical providers have praised the products that use this technology for their ability to "accurately target and treat[]" at the desired skin depth. Ex. 2066 (Sylfirm X Revolutionises [sic] the Clinical Applications of RF Microneedling), 3; Ex. 2122 (Cartessa Aesthetics, *Innovations in RF Microneedling*), 2. That former respondents such as Cartessa have praised the patented technology in their brochures and magazine placements indicates of non-obviousness. Further, in 2020, [redacted] also received a world-class product award for the Sylfirm X in Korea. Ex. 2067 (Sylfirm X Award).

205. Thus, the technology claimed in the '812 Patent has become widely recognized and praised.

XI. CONCLUSION

All statements made herein of my own knowledge are true, and all statements made on information and belief are believed to be true. Further, I am aware that these statements are made with the knowledge that willful false statements and the like so made are punishable by fine or imprisonment, or both, under 18 U.S.C. § 1001. I declare under penalty of perjury under the laws of the United States of America that the foregoing is true and correct.

Executed on November 12th, 2024, in Marthon, 16380 France.

Peter Crosby

Peter Crosby