UNITED STATES PATENT AND TRADEMARK OFFICE

BEFORE THE PATENT TRIAL AND APPEAL BOARD

MONOLITHIC POWER SYSTEMS, INC.,
Petitioner,

v.

GREENTHREAD, LLC,
Patent Owner.

Case IPR2024-00468
U.S. Patent 8,421,195

DECLARATION OF ALEXANDER D. GLEW

TABLE OF CONTENTS

I. INTRODUCTION 1

II. BACKGROUND AND QUALIFICATIONS 3

III. SCOPE OF ASSIGNMENT AND MATERIALS CONSIDERED 6

IV. LEVEL OF ORDINARY SKILL IN THE ART 9

V. RELEVANT LEGAL PRINCIPLES 10

A. Claim Construction 10

B. Anticipation 12

C. Obviousness 12

VI. THE CHALLENGED PATENT 14

A. Background Technology Regarding Dopants 14

B. Overview of Challenged Patent 14

VII. OVERVIEW OF ALLEGED PRIOR ART 19

A. Onoda (Ex. 1042 (Translation), Ex. 1043 (Original)) 19

B. Nishizawa (Ex. 1046) 24

C. Kawagoe (Ex. 1007) 24

VIII. CLAIM CONSTRUCTION 28

IX. THE CITED REFERENCES DO NOT DISCLOSE OR SUGGEST ALL THE FEATURES OF THE CHALLENGED CLAIMS 29

A. Dr. Campbell's Onoda-based analysis in both Grounds I and II is incorrect regarding the "aid the movement of minority carriers" limitations (Elements [1.5]/[1.6]) 29

B. Dr. Campbell's Onoda-Nishizawa-based analysis in Ground II is incorrect regarding the "aid the movement of minority carriers" limitations (Elements [1.5]/[1.6]) 35

C. Dr. Campbell's Kawagoe-based analysis is incorrect regarding the "aid the movement of minority carriers" limitations (Elements [1.5]/[1.6]). 37

X. CONCLUSION.....45

I, Alexander D. Glew, declare as follows:

I. INTRODUCTION

1. My name is Alexander D. Glew. I have been retained on behalf of Greenthread, LLC ("Greenthread"), and its counsel, McKool Smith, P.C., as an expert with regard to this matter. I understand Monolithic Power Systems, Inc. ("Petitioner" or "MPS") filed a Petition (Paper No. 1) for *inter partes* review (IPR) of U.S. Patent No. 8,421,195 ("the '195 patent" or "the Challenged Patent") (Ex. 1001).

2. I have been asked to consider, and provide my independent analysis and opinions regarding, whether the alleged prior art references cited in this proceeding disclose or suggest the features recited in claims 1-3 and 5-6 ("the Challenged Claims") of the Challenged Patent, which I understand Petitioner has challenged in this IPR. In my view, the alleged prior art references do neither. My opinions and conclusions are fully discussed in later sections of this declaration. This declaration is based on the information currently available to me.

3. I am an independent consultant, and I am not, and have never been, an employee of Greenthread or Petitioner. I am being compensated at my consulting rate of $700 per hour for my work related to this matter. I received no compensation for this declaration beyond my normal hourly compensation based on my time

actually spent analyzing the Challenged Patent, the prosecution history of the Challenged Patent and related applications, the alleged prior art publications relied upon by Petitioner, the declaration of Petitioner's expert Dr. Stephen A. Campbell, and other related materials (discussed below in Section III). My compensation is not dependent on the outcome of this IPR or the testimony or opinions that I give.

4. I understand a copy of my curriculum vitae is submitted as Ex. 2061, and it sets forth my educational experience, employment history, and publications.

II. BACKGROUND AND QUALIFICATIONS

5. I earned a B.S. degree in Mechanical Engineering in 1985 and a M.S. degree in Mechanical Engineering in 1987 from the University of California, Berkeley.

6. I earned a M.S. degree in Materials Science and Engineering in 1995 and a Ph.D. in Materials Science and Engineering in 2003 from Stanford University.

7. I am the Founder and President of Glew Engineering Consulting, Inc., based in Mountain View, California. I have been President of Glew Engineering Consulting, Inc. since I started the company in 1997. In my role as President, I have provided consulting services to clients in the field of semiconductor manufacturing and materials, as well as to clients in other fields. I have reviewed and analyzed semiconductor technologies and products. My consulting work has involved semiconductor process equipment, thin film deposition and characterization, process development, project turnaround/rescue, gas flow and vacuum metrology, design of experiments, corrosive gas applications, finite element analysis, and related market analysis.

8. I have over 30 years of experience in semiconductor manufacturing and materials, including in semiconductor equipment and processing. I have implemented numerous manufacturing processes for the formation of semiconductors, including chemical vapor deposition ("CVD"), plasma enhanced

chemical vapor deposition ("PECVD"), high density plasma chemical vapor deposition ("HDPCVD"), etch processing (including dry plasma and wet processing), reactive-ion etching ("RIE"), chemical-mechanical planarization ("CMP"), spin-on dielectrics ("SOD"), epitaxy ("EPI"), molecular beam epitaxy ("MBE"), rapid thermal processing ("RTP"), and others.

9. In 1987, before receiving my Ph.D., I worked at Applied Materials, Inc. in Santa Clara, California. At Applied Materials, Inc., I served in a number of roles, including Engineering Manager, Core-Technologist Project Manager, CVD Supplier Quality Engineering Manager, Core Technologist, CVD Engineering Manager, and Systems Engineer. In these roles, I provided engineering services and supervised other employees on projects related to technologies used to manufacture semiconductors, including CVD, epitaxy, physical vapor deposition ("PVD"), rapid thermal processing ("RTP"), etch, and thermal. I oversaw gas, vacuum, and chemical component evaluation, testing, and supplier quality management. I successfully proposed and executed a project to develop industry methods to determine the effects of trace chemicals on semiconductor processing and equipment reliability. I worked on the development and release of the Precision 5000 CVD product, the first cluster tool for semiconductor manufacturing.

10. I have used alpha particles to perform hydrogen forward scattering (HFS) and Rutherford Back Scattering (RBS) in materials analysis of thin films on

silicon wafers. I am generally familiar with the effects of alpha particles fired at silicon wafers.

11. I am a licensed professional mechanical engineer in the state of California.

12. I have published articles and presented on topics related to semiconductor manufacturing. My curriculum vitae includes a list of selected publications.

13. I am a co-inventor of five U.S. patents: (a) U.S. Patent No. 6,204,174, directed to a method and apparatus to control the deposition rate of material in a semiconductor fabrication process; (b) U.S. Patent Nos. 9,224,626 and 10,395,593, directed to a method of forming a heater assembly for use in semiconductor processing; and (c) U.S. Patent Nos. 6,679,476 and 7,118,090, both directed to control valves for use in ultra pure applications such as semiconductor processing. I have another patent application pending.

14. I am a member of the American Society of Mechanical Engineers ("ASME"), International Microelectronics and Packaging Society ("IMAPS"), Materials Research Society ("MRS"), Institute of Electrical and Electronics Engineers ("IEEE"), and Semiconductor Equipment and Materials International ("SEMI").

15. I am qualified to render an opinion regarding the design and development of semiconductor manufacturing devices and semiconductor materials based on my experience. Based on my expertise and qualifications, I am qualified to provide an opinion as to what a person of ordinary skill in the art would have understood, known, or concluded as of 2004.

III. SCOPE OF ASSIGNMENT AND MATERIALS CONSIDERED

16. The opinions contained in this declaration are based on the documents that I reviewed, my professional judgment, as well as my education, experience, and knowledge regarding technologies related to the Challenged Patent. In preparing this Declaration, I am relying on my own knowledge and expertise as well as the following documents:

- The Challenged Patent (Ex. 1001);
- Other patents that I understand are in the same family as the Challenged Patent, including:
    - U.S. Patent No. 9,190,502 to Dr. G.R. Mohan Rao ("the '502 patent) (Ex. 2062);
    - U.S. Patent No. 10,510,842 to Dr. G.R. Mohan Rao ("the '842 patent") (Ex. 2063);

  - U.S. Patent No. 11,121,222 to Dr. G.R. Mohan Rao ("the '222 patent") (Ex. 2064);
  - U.S. Patent No. 10,734,481 to Dr. G.R. Mohan Rao ("the '481 patent") (Ex. 2065);
  - U.S. Patent No. 11,316,014 to Dr. G.R. Mohan Rao ("the '014 patent") (Ex. 2066);

- Prosecution histories for the Challenged Patent and the other patents in the same family (listed above), which I understand constitute the exchange of correspondence between the Patent Office and the applicant (Ex. 1002; Exs. 2067-2071);
- Petitioner's IPR petitions in Nos. IPR2024-00468 (regarding the '195 patent); IPR2024-00469 (regarding the '502 patent), IPR2024-00470 and -00552 (regarding the '222 patent), IPR2024-00550 (regarding the '842 patent), IPR2024-00551 (regarding the '481 patent), IPR2024-00553 (regarding the '014 patent);
- Declaration of Dr. Stephen A. Campbell (Ex. 1003), who I understand is Petitioner's expert in this IPR and the other IPR proceedings listed above (his declaration is Ex. 1003 in each of those IPR proceedings);
- Deposition transcript of Dr. Stephen A. Campbell (Ex. 2058);

- Petitioner's exhibits 1001-1047 in this IPR; and
- Any other references/documents cited within this Declaration.

IV. LEVEL OF ORDINARY SKILL IN THE ART

17. Based on my review of the Challenged Patent, the types of problems encountered in the art at and prior to the time of the alleged invention, prior solutions to those problems, the pace with which innovations were made during the relevant time period, the sophistication of the technology, and the educational level of active professionals in the field, I believe that a person of ordinary skill in the art (POSITA), at the time of the alleged invention, would have had at least a Bachelor's of Science degree in electrical or computer engineering, materials science, chemical engineering, applied physics, or a related field, with emphasis on semiconductor manufacturing, or an equivalent degree, and at least four years of experience in semiconductor design and manufacturing. Additional education in a relevant field or industry experience may compensate for a deficit in one of the other aspects of the requirements stated above.

18. All of my opinions in this declaration are from the perspective of a POSITA, as I have defined it above and during the relevant time frame (e.g., late 2004, including the period up to September 3, 2004, which I understand is the earliest claimed priority date of the Challenged Patent). During this time frame, I possessed at least the qualifications of a POSITA, as defined above.

V. RELEVANT LEGAL PRINCIPLES

19. For the purposes of this Declaration, I have been informed about certain aspects of the law that are relevant to my analysis and opinions. I have applied these legal principles in rendering my opinions below.

A. Claim Construction

20. I understand that the ordinary and customary meaning of a claim term is the meaning that the term would have to a POSITA at the time of the effective filing date of the patent application that matured into the patent-at-issue. For the Challenged Patent, this is September 3, 2004. In the absence of an express intent on the part of the inventor to give a special meaning to the claim terms, the words are presumed to take on the ordinary and customary meanings attributed to them by a POSITA.

21. I understand that it is the use of the words in the context of the written description, and as customarily used by those skilled in the relevant art, that accurately reflects both the ordinary and the customary meaning of the terms in the claims.

22. I understand that the basis for a term's ordinary and customary meaning may be derived from a variety of sources, including the words of the claims themselves, the remainder of the specification, the prosecution history, and extrinsic

evidence concerning relevant scientific principles, the meaning of technical terms, and the state of the art at the time of the invention.

23. I have been instructed that dictionary definitions or definitions from technical references can be used to inform or confirm the ordinary and customary meaning of words found in a claim, but that in construing claim terms, the general meanings gleaned from reference sources, such as dictionaries, must always be compared against the use of the terms in the context of the claim itself, and the intrinsic record must always be consulted to identify which of the different possible dictionary meanings is most consistent with the use of the words by the inventor.

24. I understand that a patent applicant is entitled to be his or her own lexicographer (in other words, provide his or her own meaning to a word or phrase) and may rebut the presumption that claim terms are to be given their plain and ordinary meaning. To do so, the applicant must clearly set forth a definition of the term that is different from its ordinary and customary meaning.

25. Where the applicant provides an explicit definition for a term, that definition will control interpretation of the term as it is used in the claim in which it appears. I understand that the specification can also be relied on for more than just explicit lexicography to determine the meaning of a claim term. For example, I understand that the meaning of a particular claim term may also be determined by

implication, that is, according to the usage of the term in the context of the specification.

B. Anticipation

26. I understand that under U.S. Patent Law, 35 U.S.C. § 102, a claim is invalid as anticipated if a single prior art reference discloses each and every limitation of the claimed invention.

27. I am informed that a reference is anticipatory if it contains the claim elements in the same order as claimed, regardless of whether the prior art and the claimed invention are directed to achieving the same purpose.

28. I understand that a prior art reference may anticipate a claim without expressly disclosing a feature of the claimed invention if that missing feature is necessarily present, or inherent, in the single anticipating reference.

29. I am informed that inherency requires more than a probability or possibility that a claimed feature is present in the prior art, but rather that the feature or characteristic is a necessary part of the prior art. I also am informed that recognition of the inherency by a POSITA— at the time— is not required.

C. Obviousness

30. I understand that under U.S. Patent Law, 35 U.S.C. § 103, a claim is invalid as obvious if the differences sought to be patented and the prior art are such

that the subject matter as a whole would have been obvious at the time the invention was made to a person having ordinary skill in the art to which said subject matter pertains.

31. I am informed that an obviousness analysis requires an assessment of the scope and content of the prior art, the differences between the art and the claims at issue, and the level of ordinary skill in the art. I am told that it is against this backdrop that obviousness is assessed.

32. I am informed that a person of ordinary skill in the art (POSITA) is a hypothetical person who is presumed to be aware of all the pertinent prior art. I am also informed that an obviousness analysis may take account of the inferences and creative steps that a POSITA would employ.

VI. THE CHALLENGED PATENT

A. Background Technology Regarding Dopants

33. Silicon is an example of a semiconductor. In its pure form, it is typically an insulator, but it can become an electrical conductor when impurities called "dopants" are added into the silicon crystal. These dopants are often phosphorous or boron atoms that have one more or one less valence electron than a silicon atom. If the dopant has one less valence electron, then it creates what is called a "hole" where there was an electron, which can be thought of as a positive unit of charge. The extra electrons or holes disturb the local charge equilibrium in the silicon and can become mobile in response to electric fields. Thus, the electrons and holes are called "charge carriers." These dopants can also change the local net electrical charge distribution in the surrounding silicon, influencing the motion of other charge carriers passing by. When the dopant concentration is graded in a particular direction, other charge carriers will move in the gradient direction (or opposite direction) depending on the charge carrier's polarity. This phenomenon is called "carrier drift."

B. Overview of Challenged Patent

34. At the time of invention of the Challenged Patent, most semiconductor devices relied on spatially uniform concentrations of dopants. Ex. 1001 (Challenged

Patent), Abstract, 1:36-51. Dr. Rao (the inventor named on the Challenged Patent) recognized, however, that graded concentrations of dopants can be used to improve certain aspects of the performance of transistors and other semiconductor devices. *Id.*, Abstract, 3:3-13, 3:33-35. The claimed invention is clearly disclosed in, e.g., Figs. 4A, 5A-5C of the Challenged Patent, and the corresponding parts of the specification.

35. A surface-channel MOSFET is a common type of transistor capable of controlling current flow at or along the surface of the semiconductor substrate. Ex. 2059 (Chen textbook), 27 ("carriers propagate at the semiconductor surface"). Figure 5B shows an NMOS[1] transistor that is formed in a p-type surface layer. The transistor comprises (1) a gate; (2) a thin oxide separating the gate from the surface layer; and (3) two doped regions called the source and drain (shaded red). Ex. 1001, 3:10-12 ("electrons can be swept from source to drain"), 3:41-43 ("accelerate majority carriers towards the drain"). In Fig. 5B, which is annotated below, the N+ means these regions are heavily doped with an n-type dopant that creates a surplus

[1] MOS stands for "metal oxide semiconductor."

of negative carriers (i.e., electrons).[2] The specification explains that the NMOS transistor in Fig. 5B can be a surface-channel MOSFET.

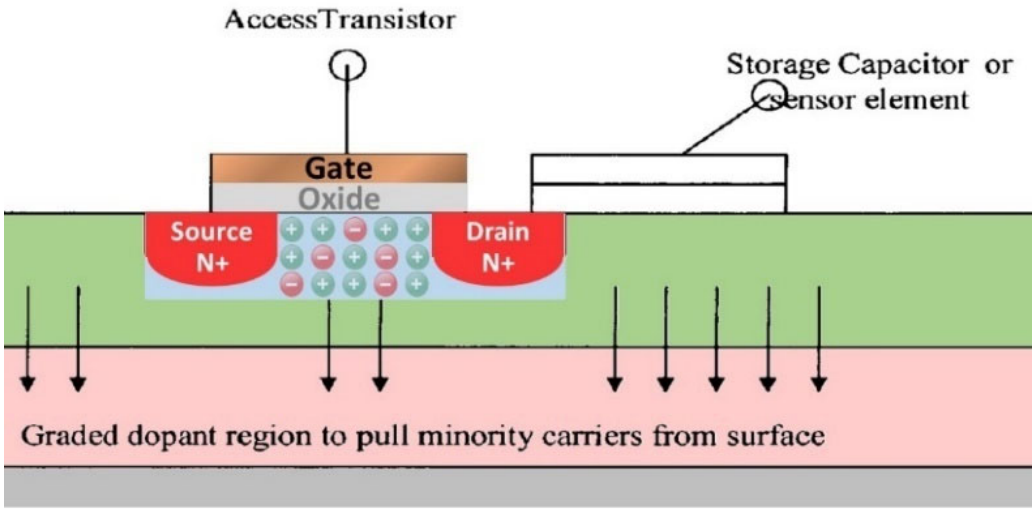

Id., Fig. 5B (annotated); *see also id.*, 3:41-43. Meanwhile, the p-type silicon between the source and drain (shaded blue) has an abundance of positively charged holes (green circles). When the holes separate the source's electrons from the drain's electrons, current cannot flow through the transistor, and the transistor is in an "off" state.

36. When a positive voltage is applied to the gate, an electric field forms in the oxide. This positive electric field repels the "positive" holes downwards, while

[2] An "N" region or layer has more electrons, and thus more mobile **n**egative charges. A "P" layer has more holes, and more mobile **p**ositive charges. A "+" or "-" means heavily or lightly doped.

the negative electrons (red circles) are attracted to move into the blue surface layer. When enough electrons have accumulated in the surface layer below the oxide, they form a conductive channel (as annotated in Figure 5B below) of electrons between the source and the drain, and current can begin to flow through the transistor.

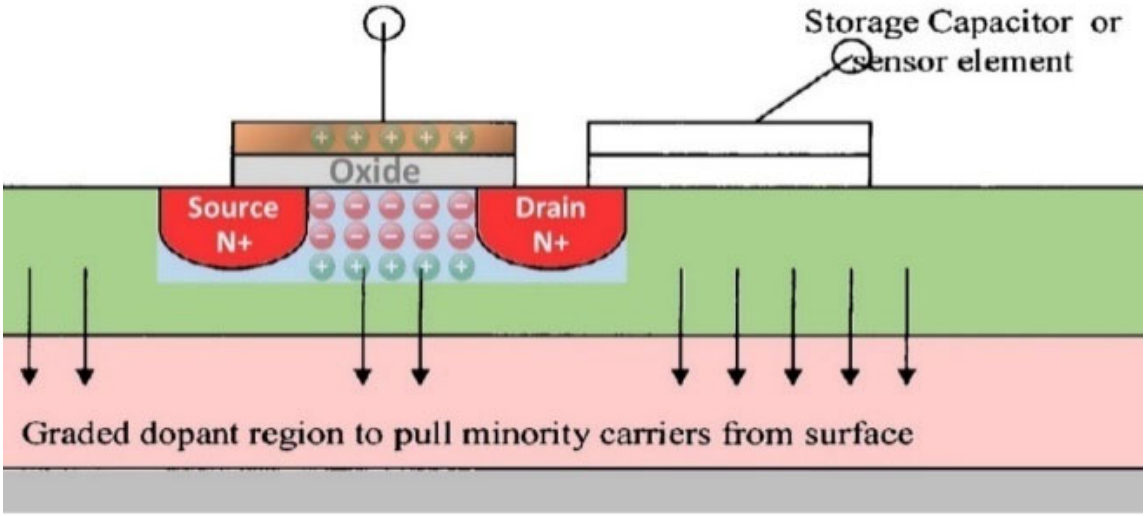

Ex. 1001, FIG. 5B (annotated).[3] In order to turn the transistor "off," the positive voltage is removed from the gate and the channel disappears as the holes return to the surface layer.

37. Dr. Rao (the inventor named on the Challenged Patent) recognized that by using graded concentrations of dopants in the well region and a drift layer (shaded

[3] Because the channel is formed by electrons with a **n**egative charge, the MOSFET is referred to as an **n**-channel MOSFET, and the "minority carriers" are holes.

pink), it is possible to "pull" carriers from the silicon's surface. Ex. 1001, Fig. 5B (annotated above). In this example, pulling the holes from the surface layer when a positive voltage is applied to the gate, allows the transistor to turn "on" more quickly. This improves the speed and performance of the transistor. Ex. 1001, 3:8-13.

VII. OVERVIEW OF ALLEGED PRIOR ART

38. Dr. Campbell's declaration relies on Onoda (Ex. 1043) for single-reference obviousness in Ground I, obviousness over Onoda in view of Nishizawa (Ex. 1046) in Ground II, and Kawagoe (Ex. 1007) for single-reference obviousness in Ground III. Ex. 1003, Section III.B. Below, I provide overviews of relevant portions of Onoda and Kawagoe.

A. Onoda (Ex. 1042 (Translation), Ex. 1043 (Original))

39. The Petition's first ground relies on single-reference obviousness over Onoda (Ex. 1042), and the second ground relies on Onoda as the primary reference for an obviousness combination with Nishizawa (Ex. 1046). Pet., 4-5. Below is an overview of pertinent portions of Onoda relevant to the present dispute.

40. Onoda discloses a nonvolatile semiconductor storage device with a cross-section as shown below in Figure 2.

[FIG. 2]

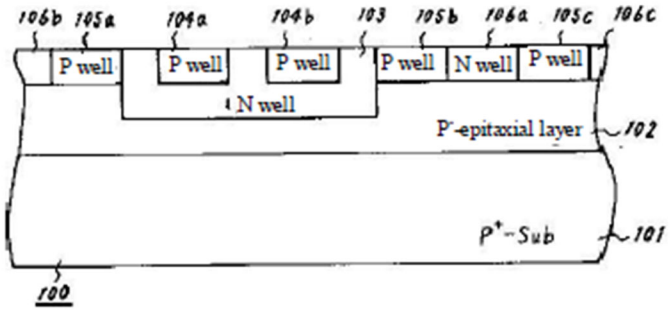

Ex. 1042, FIG. 2.

41. Onoda discloses that:

> A lightly-doped P-type epitaxial layer 102a is formed on the surface of a first semiconductor layer 101 that is made from a heavily-doped P-type silicon substrate. Boron [B] is implanted into the surface of this epitaxial layer 102a and a heat treatment is carried out to produce a lightly-doped P-type second semiconductor layer 102. Regions other than a desire region are masked, phosphorus is implanted, and a heat treatment is carried out to form an N-type first well region 103. Regions other than the desired region are masked, boron [B] is implanted, and the boron implantation layer is then masked and phosphorus is implanted, and a heat treatment is carried out to form P-type second well regions 104a and 104b, P-type third well regions 105a through 105c, and N-type fourth well regions 106a through 106c.

Id., Abstract.

42. Onoda discloses carrying out a heat treatment to thermally diffuse the boron and phosphorus of the boron implantation layers 104A, 104B, 105A, 105B, and 105C to form, as illustrated below in FIG. 8, P-type second well regions 104a and 104b and P-type third well regions 106a through 106c, and N-type fourth well regions 106a through 106c, in the surface of the second semiconductor layer 102.

The dopant concentration due to the boron at this time is depicted by the dotted line D shown in FIG. 9 (below). *Id.*, ¶[0050].

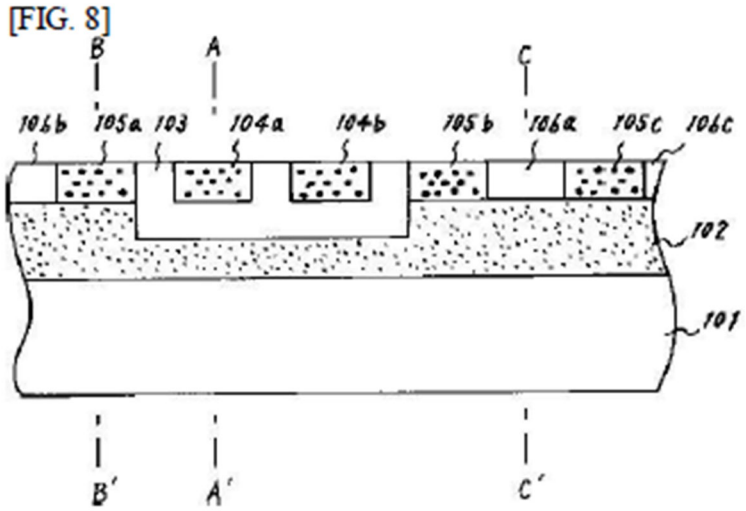

Ex. 1042, FIG. 8.

[FIG. 9]

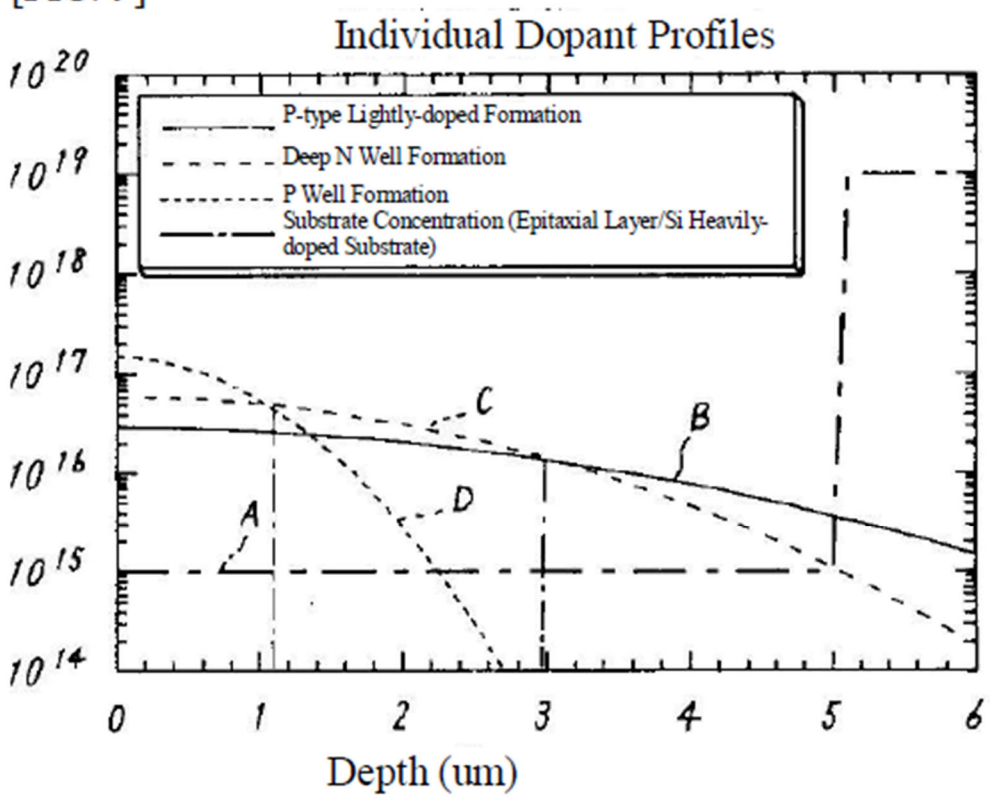

Ex. 1042, FIG. 9.

43. Onoda discloses that the dopant profile appearing in the B-B' cross-section in FIG. 8 is shown in FIG. 11 (below). Id., ¶[0052].

[FIG. 11]

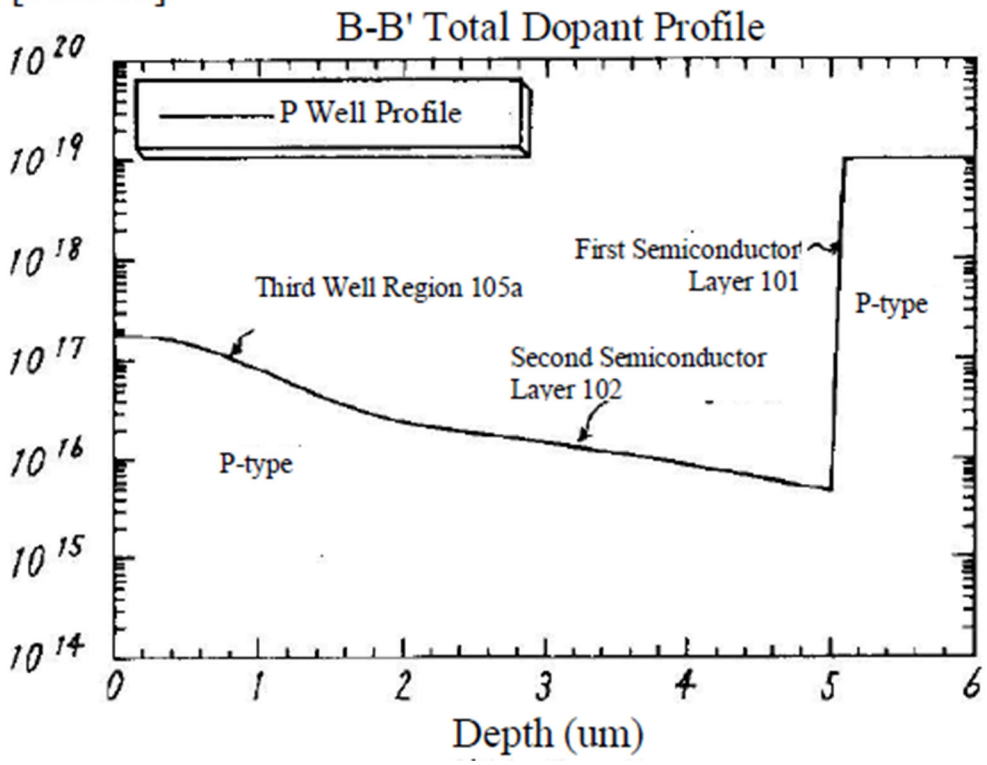

Ex. 1042, FIG. 11.

B. Nishizawa (Ex. 1046)

44. As noted above, the Petition's second ground relies on Onoda as the primary reference for an obviousness combination with Nishizawa (Ex. 1046). Pet., 4-5. Below is an overview of pertinent portions of Nishizawa relevant to the present dispute.

45. Nishizawa is a patent that was trying to solve the problem of carriers created by alpha rays in the substrate and preventing them from moving up from the substrate. For example, Nishizawa states that:

> Accordingly, it will be understood that the alpha-particle immediately after irradiation to the surface of a semiconductor body has an energy of several MeV, for example about 5 MeV, and that, accordingly, the probability of creation of electron-hole pairs is extremely low near the surface. The alpha-particle will begin to create electron-hole pairs after it has entered into the semiconductor substrate to a certain distance.

Ex. 1046, 19:21-34.

C. Kawagoe (Ex. 1007)

46. The Petition's third ground relies on single-reference obviousness over Kawagoe (Ex. 10007). Pet., 4-5. Below is an overview of pertinent portions of Kawagoe relevant to the present dispute.

47. Kawagoe is a patent that:

> relates to a process for manufacturing a semiconductor wafer, a semiconductor wafer, a process for manufacturing a semiconductor integrated circuit device, and a semiconductor integrated circuit device and, more particularly, to a technique which is effective if applied to the so-called 'epitaxial wafer manufacturing process' for forming an epitaxial layer over the surface of a semiconductor substrate body, an epitaxial wafer, a process for manufacturing a semiconductor integrated circuit device by using the epitaxial wafer, and a semiconductor integrated circuit device.

Ex. 1007, 1:13-23.

48. Figure 16 of Kawagoe (shown below) is "a section showing an essential portion of a semiconductor integrated circuit device according to" Kawagoe's fourth embodiment. *Id.*, 14:46-49.

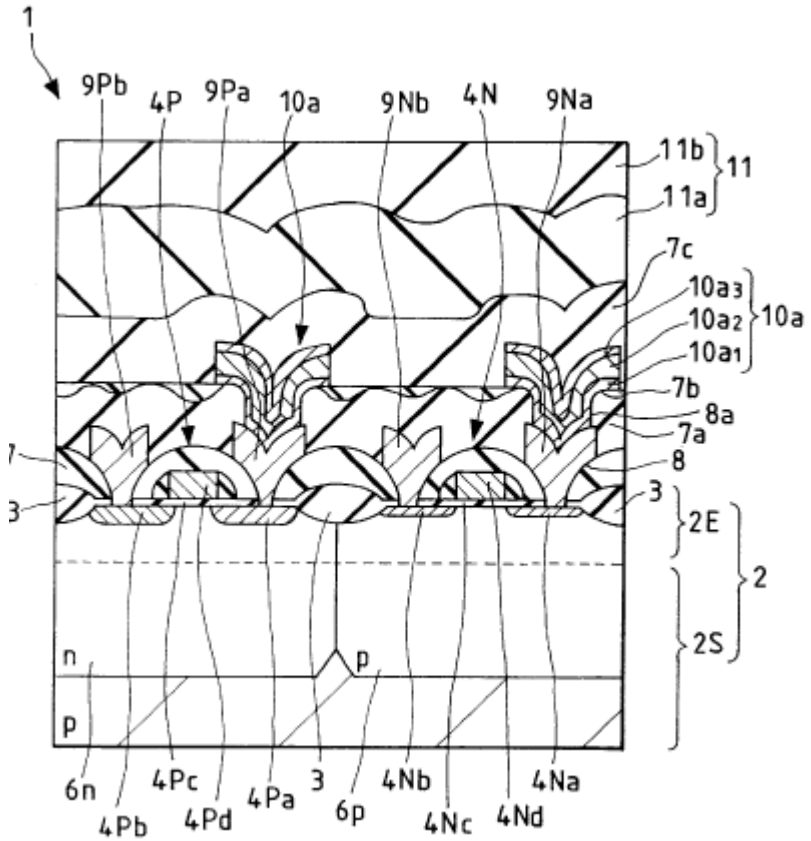

Id., FIG. 16.

49. Figure 16 shows, in part, an n-well 6n and a p-well 6p. Kawagoe discloses that in p-well 6p:

> the impurity concentration of the p-well 6p is given such a gradient that it is gradually lowered in the depthwise direction from the surface of the epitaxial layer 2E, so that the influence to be caused by the carriers (or electrons) due to the α-ray is lowered. Specifically, ***the electrons produced by the α-ray are attracted to the substrate body 2S by that concentration gradient and prevented from entering the p-well 6p*** so that the soft errors can be reduced in case the MIS memory of the DRAM

> or the like is formed in the p-well 6p. The impurity concentration NW in the principal surface of the epitaxial layer 2E of the p-well 6p and the n-well 6n is at about 6×10^{16} atoms/cm^3, so that the impurity concentration of the p-well 6p and the n-well 6n is at 5×10^{15} to 6×10^{16} atoms/cm^3.

Id., 16:2-15 (emphasis added). Figure 23 (shown below) "is a section of the essential portion of the semiconductor substrate at the step … of manufacturing the semiconductor integrated circuit device of FIG. 16":

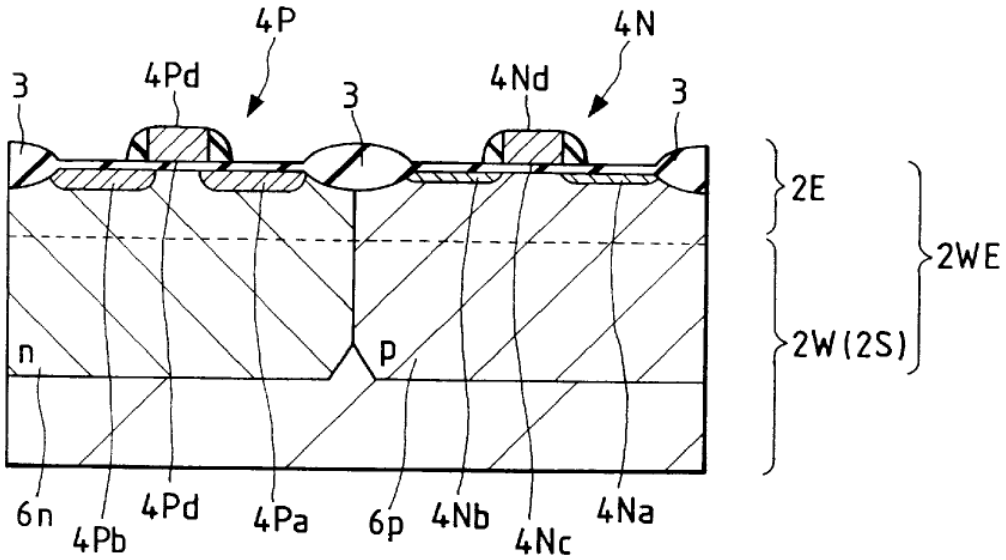

Id., 6:1-4.

VIII. CLAIM CONSTRUCTION

50. I understand that claim terms are typically given their ordinary and customary meaning, as would have been understood by a person of ordinary skill in the art at the time of the alleged invention. In considering the meaning of the claims, I also understand that one must consider the claim language, specification, prosecution history, and the knowledge of a person of ordinary skill in the art at the relevant time. I understand that Patent Owner is not proposing any claim terms for claim construction. I agree with Patent Owner that none of the terms require construction. I applied the above understanding in my analysis.

IX. THE CITED REFERENCES DO NOT DISCLOSE OR SUGGEST ALL THE FEATURES OF THE CHALLENGED CLAIMS

51. In my opinion, the prior art references relied upon in the Petition and Dr. Campbell's declaration (Ex. 1003) do not disclose or suggest all the features of the Challenged Claims, as I explain below. Note that Dr. Campbell's declaration was submitted for three IPRs (IPR2024-00468, IPR2024-00469, and IPR2024-00470) for, respectively, U.S. Patent Nos. 8,421,195; 9,190,502; and 11,121,222. His analysis for the corresponding claim elements for corresponding grounds of invalidity between the three patents' claims is similar, if not identical. To the extent that certain paragraphs of Dr. Campbell's declaration that are cited below may refer to one patent, my analysis equally applies to corresponding claim elements of the other two challenged patents.

A. Dr. Campbell's Onoda-based analysis in both Grounds I and II is incorrect regarding the "aid the movement of minority carriers" limitations (Elements [1.5]/[1.6]).

52. Dr. Campbell stated in his declaration that "Onoda Renders Obvious Claims 1, 2, 3, 5, and 6." Ex. 1003, ¶52 (at heading); *see also id.*, ¶54. I disagree. For elements [1.5] and [1.6], Dr. Campbell stated in his declaration that "Onoda discloses this limitation" (Ex. 1003, ¶¶72, corresponding to element [1.5]) and that "Onoda discloses a well region (green) in its single drift layer (epitaxial layer 102, tan)" (*id.*, ¶75, corresponding to element [1.6]). I disagree with both statements and

disagree that Onoda discloses or renders obvious this claim. The "aid the movement of minority carriers" feature appears in the Challenged Claims as follows. Element [1.5]: "said drift layer further having a first static unidirectional electric drift field to ***aid the movement of minority carriers*** from said surface layer to said substrate," and Element [1.6]: "at least one well region disposed in said single drift layer, said well region having a graded concentration of dopants and a second static unidirectional electric drift field to ***aid the movement of minority carriers*** from said surface layer to said substrate."

53. Dr. Campbell's analysis for the Onoda-based grounds relies entirely on his opinion on inherency and on Greenthread's supposed admissions. Ex. 1003, ¶¶72-73. Regarding inherency, Dr. Campbell stated that "a downward dopant gradient would create an inherent, and static electric drift field to aid the movement of minority carriers down towards the substrate irrespective of whether the doped regions are n-type or p-type." *Id.*, ¶73 (corresponding to element [1.5]); *id.*, ¶80 (corresponding to element [1.6]). Regarding Greenthread's supposes admissions, Dr. Campbell stated that: "Onoda's drift layer has a downward-sloping dopant concentration extending between the surface layer (blue) and the substrate (gray, starting at the 5 μm depth level)," and further stated: "As I have described elsewhere in this declaration, this [was a known property that the Patent Owner acknowledged in prosecution, and it was described in the Kamins and Jastrzebski references and

thus, according to Patent Owner (and also in light of Applicant's representations to the Patent Office discussed above), has a static unidirectional electric drift field that aids the movement of minority carriers from the surface layer to the substrate."). *Id.*, ¶¶72-73; *see also id.*, ¶¶79-80 (corresponding to element [1.6]). Dr. Campbell did not analyze anything actually disclosed in Onoda for the "aid the movement of minority carriers…" feature. Ex. 1003, ¶¶72-85.

54. Based on Dr. Campbell's declaration, it is apparent that for his analysis of the "aid the movement of minority carriers …" limitations he only considered the downward sloping nature of Onoda's concentration gradient, and not any other aspect of the gradient (e.g., the magnitude of the force it produces on carriers) or whether there are any external forces (e.g., opposing forces e.g., due to the intrinsic resistance of silicon) such that the net force might not be aiding minority carrier movement in the claimed manner. In my opinion, a POSITA would have known that if two forces are acting on an object in opposite directions, both forces cannot aid its movement. Either the opposing forces are equal—and there is no movement—or the two forces are not equal and the object moves in the direction of the force having larger magnitude, albeit diminished by the counter force. The smaller force does not "aid" the movement of the object, because it is pushing *against* the movement. The magnitude of the concentration gradient plays a substantial role, because a small gradient may not be sufficient to overcome the

resistance of the material in which the gradient exists. Therefore, a POSITA would need to know other parameters of the relevant device (e.g., magnitude of concentration gradient, intrinsic resistance of silicon, presence of any other external forces) to know whether a drift field associated with a concentration gradient would aid the movement of minority carriers.

55. Dr. Campbell stated in his declaration that "an electric field that is properly constructed will push the minority carriers away from the surface." Ex. 1003, ¶32. I agree that if an electric field is "properly constructed," it may push minority carriers in a particular direction. For an electric field to be "properly constructed" to aid in such movement, it must account for a number of forces on a carrier, as the net sum of those forces is what determines carrier movement based on the electric field. For example, a doping concentration gradient may generate an electric field that may not be sufficient to overcome other forces acting on the carrier, and thus it would not aid in that carrier's movement. The electric field may also push in the wrong direction, or balance opposing forces such that no carrier movement would occur. Dr. Campbell agreed that a "sufficient electric field intensity" would be required to move carriers. Ex. 2058 (Campbell Deposition Transcript), 34:10-14.

56. Dr. Campbell explained in his deposition that other factors that could generate forces in a substrate might include temperature, capacitance effects at a PN

junction, and imperfections, e.g. dislocations and vacancies, in the silicon crystal. *Id.* at 34:15-36:19; 39:8-12. I agree with Dr. Campbell on this point. Another factor is the inherent resistance of silicon. The listed factors would have to be analyzed before determining whether an electric field was of sufficient intensity to aid the movement of carriers.

57. The Challenged Patent further explains that slope of the dopant concentration is a relevant parameter to determine whether that concentration gradient will aid in carrier movement. For example, the Challenged Patent states:

> The relative doping concentrations of emitter and collector regions varies from 10^{18} to 10^{20}/cm3, whereas the base region is 10^{14} to 10^{16}/cm3 depending on the desired characteristics of the BJT. In graded base p-n-p transistors, the donor dopant concentration may be 10 to 100× at the emitter-base junction, relative to the base-collector junction (1×). The gradient can be linear, quasi linear, exponential or complimentary error function. The relative slope of the donor concentration throughout the base creates a suitable aiding drift electric field, to help the" carriers move.

Ex. 1001, 2:35-50.

58. Dr. Campbell's declaration does not indicate that he calculated the slope of the concentration gradient that he said Onoda discloses. The magnitude of

the slope is essential to determine the magnitude of the force the dopant gradient places on the carrier and thus the net force. Since the mere direction of the gradient is *not* sufficient to determine the nature of the net force, the premise of Dr. Campbell's analysis is incorrect. Dr. Campbell's declaration also does not indicate that he analyzed other potential forces within the disclosure of Onoda. Therefore, I disagree with his conclusion about the "aid the movement of minority carriers…" feature being taught in Onoda.

B. Dr. Campbell's Onoda-Nishizawa-based analysis in Ground II is incorrect regarding the "aid the movement of minority carriers" limitations (Elements [1.5]/[1.6]).

59. Dr. Campbell stated in his declaration that "Onoda in view of Nishizawa Renders Obvious Claims 1, 2, 3, 5, and 6." Ex. 1003, ¶89 (at heading). I disagree. In the Onoda-Nishizawa ground, Dr. Campbell referred back to his Onoda-based analysis from Ground I, in which he stated a POSITA would have recognized as providing a built-in, static, unidirectional electric drift field to aid the movement of minority carriers from the surface layer to the substrate. Ex. 1003, ¶96. But as I explained above, the existence of a downward-sloping graded-dopant concentration alone is not sufficient to establish the "aid the movement of minority carriers" claim limitation. *See* above at Section IX.A.

60. Dr. Campbell further stated in his declaration that "Nishizawa makes these elements explicit and explains that it is necessary to form an impurity gradient in the drift layer to move the minority carriers to the substrate." Ex. 1003, ¶96. But as discussed above with Onoda, there are electric-field-generating PN junctions in Nishizawa that are not discussed in in the Petition. Dr. Campbell testified that the capacitance created at a PN junction affects the movement of carriers because it "creates a fairly substantial electric field." Ex. 2058, 35:22-36:4. As I stated above in Section IX.A, I agree that capacitance effects at a PN junction can generate forces in the substrate. Dr. Campbell's declaration does not indicate that he considered the

capacitance effects at a PN junction in his analysis of Nishizawa. Therefore, I disagree with his conclusion about the "aid the movement of minority carriers…" feature being taught in the combination of Onoda and Nishizawa.

C. Dr. Campbell's Kawagoe-based analysis is incorrect regarding the "aid the movement of minority carriers" limitations (Elements [1.5]/[1.6]).

61. Dr. Campbell stated in his declaration that "Kawagoe Renders Obvious Claims 1, 2, 3, 5, and 6." Ex. 1003, ¶100 (at heading). I disagree. For element [1.5] he states that "Kawagoe teaches a single drift layer with a graded dopant profile" and that "POSITA would have understood that Kawagoe's single drift layer has multiple static unidirectional electric drift fields that aid in the movement of minority carriers to the substrate." *Id.*, ¶¶117-118 (citing Figs. 16 and 17 of Kawagoe). For element [1.6], he refers back to his analysis in element [1.5] and states, "the second static unidirectional electric drift field aids the movement of minority carriers from said surface layer to said substrate." *Id.*, ¶124. He did not identify any portion of Kawagoe that actually discloses the "aid the movement of minority carriers" feature of these claim elements. The "aid the movement of minority carriers" feature appears in the challenged independent claims as follows. Element [1.5]: "said drift layer further having a first static unidirectional electric drift field to ***aid the movement of minority carriers*** from said surface layer to said substrate," and Element [1.6]: "at least one well region disposed in said single drift layer, said well region having a graded concentration of dopants and a second static unidirectional

electric drift field to ***aid the movement of minority carriers*** from said surface layer to said substrate."

62. In the Kawagoe-based analysis in Ground III, for the "aid the movement of minority carriers" feature of these claims, it appears that Dr. Campbell made inferences based on Kawagoe's disclosures, and I disagree with his inferences. Specifically, he pointed to one part of Kawagoe for mapping to the claimed "graded dopant concentration" of the above independent claims, and used that to infer that the "aid the movement of minority carriers" limitation of those claims is disclosed. Ex. 1003, ¶¶100, 117-126. But while Kawagoe does disclose a "concentration gradient," Dr. Campbell misses the context of Kawagoe. In general, there are three possibilities: a reference disclosing a dopant concentration gradient in a semiconductor device could a) teach that the concentration gradient aids the movement of minority carriers; b) teach that the concentration gradient impedes the movement of minority carriers; or c) be silent as to the concentration gradient aiding or impeding the movement of minority carriers. Kawagoe teaches using a concentration gradient to *impede* carrier movement. Kawagoe is concerned with naturally occurring α-rays striking a semiconductor device and generating free

electrons in the substrate.[4] Kawagoe's free electrons can disrupt the operation of the device during a "single event upset" ("SEU"). Dr. Campbell fails to appreciate that Kawagoe teaches a "concentration gradient" to "*prevent*[] [the SEU-generated carriers] from entering the p-well." Ex. 1007, 16:7-11. Below, I reproduce the portion of Kawagoe's specification containing the disclosure about preventing carriers from entering the p-well.

16

from the principal surface (having an impurity concentration N_W) of the epitaxial layer **2**E. Thus, the impurity concentration of the p-well **6***p* is given such a gradient that it is gradually lowered in the depthwise direction from the surface of the epitaxial layer **2**E, so that the influence to be caused by the carriers (or electrons) due to the α-ray is lowered. Specifically, the electrons produced by the α-ray are attracted to the substrate body **2**S by that concentration gradient and prevented from entering the p-well **6***p* so that the soft errors can be reduced in case the MIS memory of the DRAM or the like is formed in the p-well **6***p*. The impurity concentration N_W in the principal surface of the epitaxial layer **2**E of the p-well **6***p* and the n-well **6***n* is at about 6×10^{16} atoms/cm^3, so that the impurity concentration of the p-well **6***p* and the n-well **6***n* is at 5×10^{15} to 6×10^{16} atoms/cm^3.

[4] As I explained above in Section II, I am familiar with *α*-rays and have experience with them, including in the time period preceding 2004 (which I understand is the earliest claimed priority date of the Challenged Patent).

Id., 16:1-15.

63. In my opinion, a POSITA would have understood that Kawagoe shows that graded dopant concentrations don't *always* aid carrier movement, as Petitioner claims, because sometimes the "concentration gradient" can "prevent" carrier movement.

64. Based on Dr. Campbell's declaration, it is apparent that for his analysis of the "aid the movement of minority carriers" limitation he only considered the downward sloping nature of Kawagoe's concentration gradient, and not any other aspect of the gradient (e.g., the magnitude of the force it produces on carriers) or whether there are any external forces (e.g., opposing forces, e.g., due to the intrinsic resistance of silicon) such that the net force might not be aiding carrier movement in the claimed manner. But as I explained above, the existence of a downward-sloping graded-dopant concentration alone is not sufficient to establish the "aid the movement of minority carriers" claim limitation. *See* above at Section IX.A. As I explained above, Dr. Campbell's premise is flawed because did not take into account anything besides the existence of a downward-sloping concentration gradient in concluding that Onoda teaches the "aid the movement of minority carriers" aspect of limitations [1.5] and [1.6]. *Id.* His analysis is based on an incorrect premise.

65. Dr. Campbell's declaration does not indicate that he calculated the slope of the concentration gradient that he said Kawagoe discloses. The magnitude

of the slope is essential to determine the magnitude of the force the dopant gradient places on the carrier and thus the net force. Since the mere direction of the gradient is *not* sufficient to determine the nature of the net force, the premise of Dr. Campbell's analysis is incorrect. Therefore, I disagree with his conclusion about the "aid the movement of minority carriers" feature being taught in Kawagoe. As I explained above, since Kawagoe teaches inhibiting carrier movement, it does not teach aiding carrier movement.

66. Kawagoe's electrons are initially ***below*** p-well 6p, and prevented from moving ***upward*** into p-well 6p. The annotated figure (which adds an annotation to one found in the Petition) shows, in orange, the location of the carriers in Kawagoe.

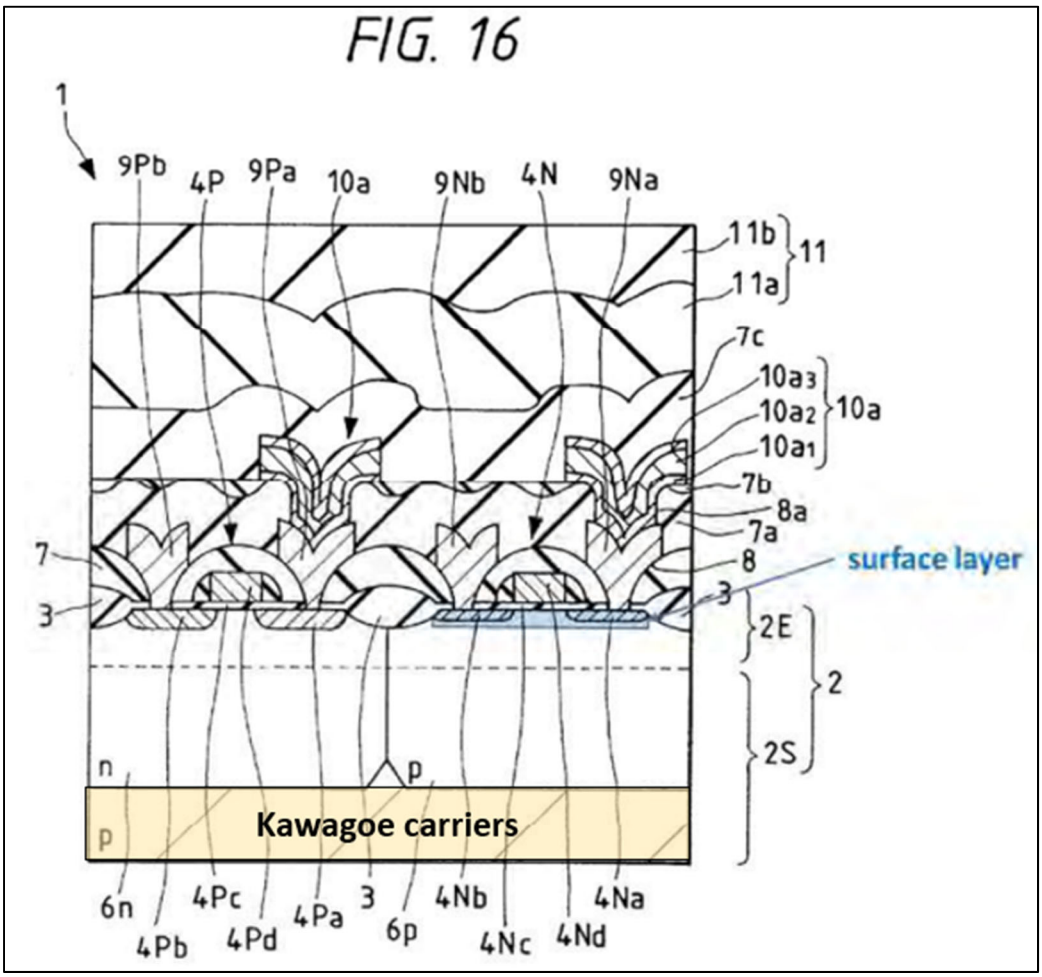

Pet., 56 (annotated). Kawagoe does not address carriers in the "active region," and as the annotated image above shows, does not "aid carrier movement *from said surface layer* to said substrate" (in both elements [1.5] and [1.6]) because Kawagoe's carriers are nowhere near what the Petition identifies as the "surface" or first/second "active regions." Recall that the dopant gradient keeps the alpha particle-generated electrons (SEU) from entering the well. Since the well starts at the surface and

extends down to the depth 2WE, the generated electrons must originate in the substrate below the wells, in the area highlighted in yellow.

67. Dr. Campbell does not analyze Kawagoe's disclosure regarding electrons generated by alpha-rays, and that disclosure shows that it is not relevant. A POSITA would have understood that when Kawagoe mentions "electrons produced by the α-ray" (Ex. 1007, 16:7-11), Kawagoe is *not* describing electrons near the surface. Referring back to Nishizawa, Nishizawa demonstrates the knowledge of a POSITA:

> Accordingly, it will be understood that the alpha-particle immediately after irradiation to the surface of a semiconductor body has an energy of several MeV, for example about 5 MeV, and that, accordingly, ***the probability of creation of electron-hole pairs is extremely low near the surface***. The alpha-particle will begin to create electron-hole pairs after it has entered into the semiconductor substrate to a certain distance.

Ex. 1046, 19:21-34; *see also id.*, 20:19-22 ("[T]he amount of electrons created which adversely affect the memory action is no greater than only 10% of the stored electric charge, and thus it can be disregarded."). To the extent that any electrons are created near the surface, they are taught that they are not a problem. Hence, there would be no reason to solve a nonexistent problem.

68. A POSITA would have known that the probability of the alpha-ray strike *creating electrons* (like disclosed in Kawagoe, Ex. 1007, 16:7-11) is *extremely low* near the surface (as demonstrated by Nishizawa). Therefore, the better reading of Kawagoe is that Kawagoe is describing electrons created in the substrate body below the wells. Thus, a POSITA would have understood that Kawagoe's electrons that are prevented from entering the p-well are *not* created near the surface. Thus, Kawagoe does not teach aiding carrier movement from "said surface layer to said substrate," as recited in both elements [1.5] and [1.6].

X. CONCLUSION

69. I declare that all statements made herein of my knowledge are true, and that all statements made on information and belief are believed to be true, and that these statements were made with the knowledge that willful false statements and the like so made are punishable by fine, imprisonment, or both, under Section 1001 of Title 18 of the United States Code.

Respectfully submitted,

Date: November 8, 2024 By: Alexander D. Glew

Alexander D. Glew