US 20040123391A1

(19) United States

(12) Patent Application Publication

(10) Pub. No.: US 2004/0123391 A1

(43) Pub. Date: Jul. 1, 2004

Call

(54) CUSHION FOR A WHEELCHAIR

(76) Inventor: **Evan W. Call**, Bountiful, UT (US)

Correspondence Address:
Robert B. Leonard
Faegre & Benson LLP
2200 Wells Fargo Center
90 South Seventh Street
Minneapolis, MN 55402-3901 (US)

(21) Appl. No.: **10/693,041**

(22) Filed: **Oct. 24, 2003**

Related U.S. Application Data

(60) Provisional application No. 60/421,212, filed on Oct. 25, 2002.

Publication Classification

(51) **Int. Cl.**[7] **A47C 16/00**

(52) **U.S. Cl.** **5/630**; 5/655.9

(57) **ABSTRACT**

A cushion for a wheelchair, including a matrix of cushion modules, wherein each cushion module includes a cushion element that has a phase change material included in its filler material that sits above an additional cushion element of a larger volume of filler material. The cushion also typically includes a support rail located on three sides of the matrix of cushion modules to align the body of the wheelchair user when sitting in the wheelchair. In addition, the cushion typically includes a base member that is positioned beneath the matrix and provides stability for the cushion. The cushion elements are typically enclosed in a moisture resistant envelope.

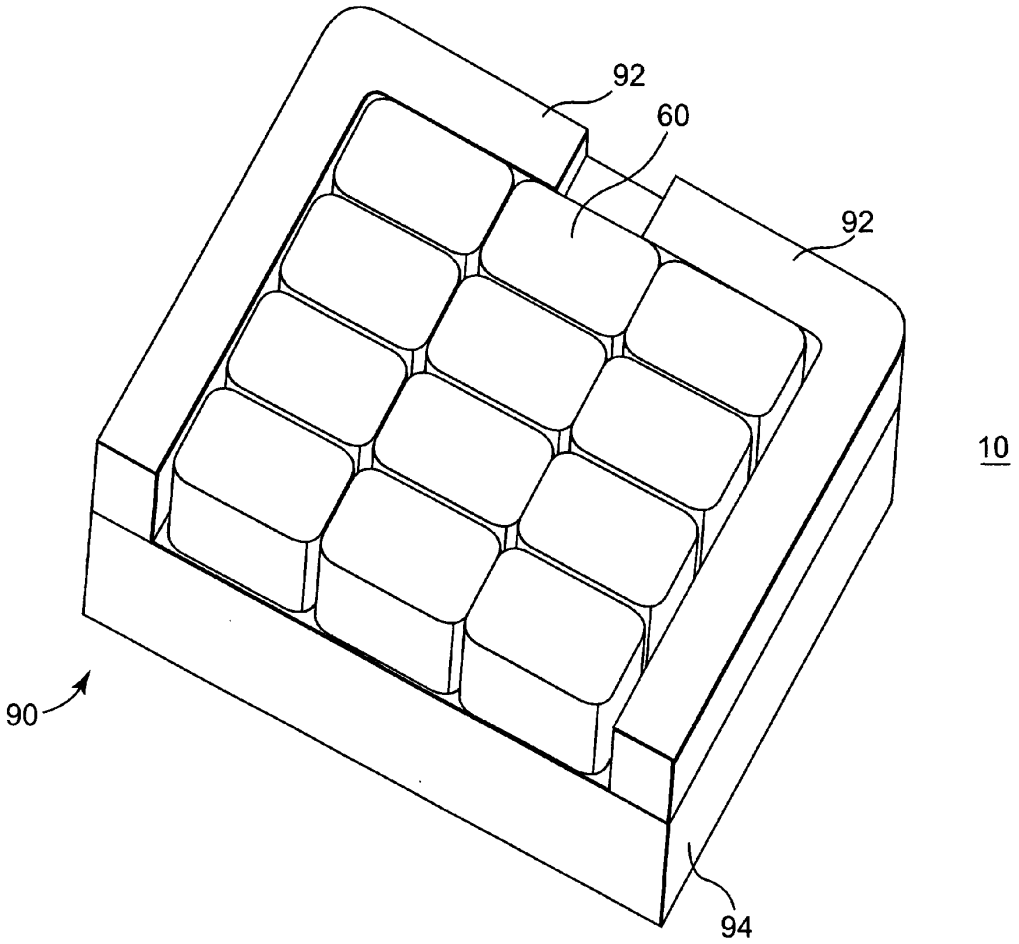

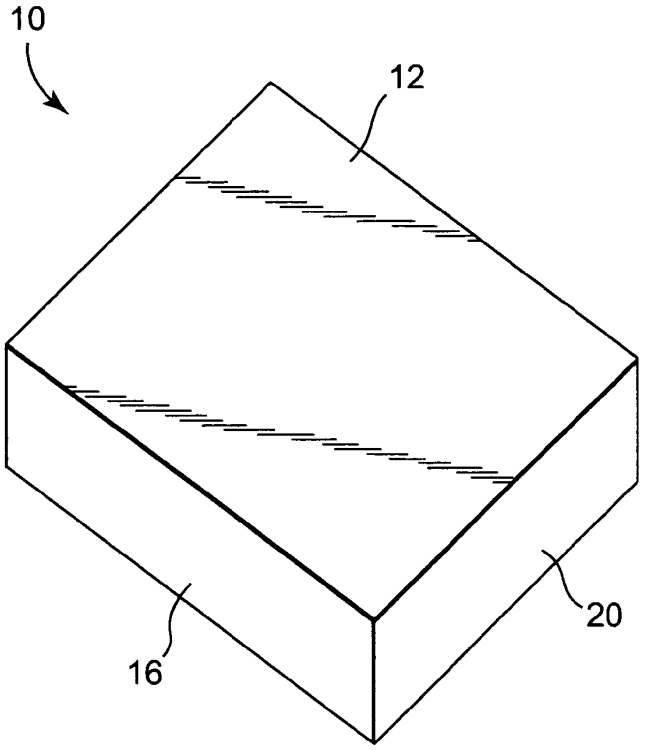

Fig. 1

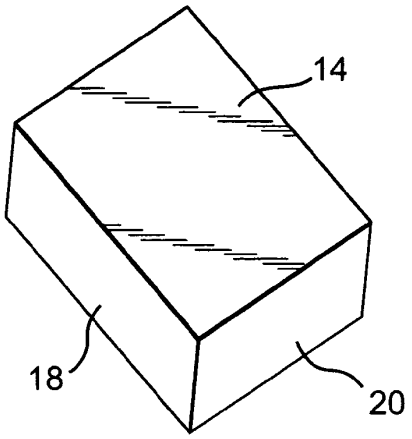

Fig. 1A

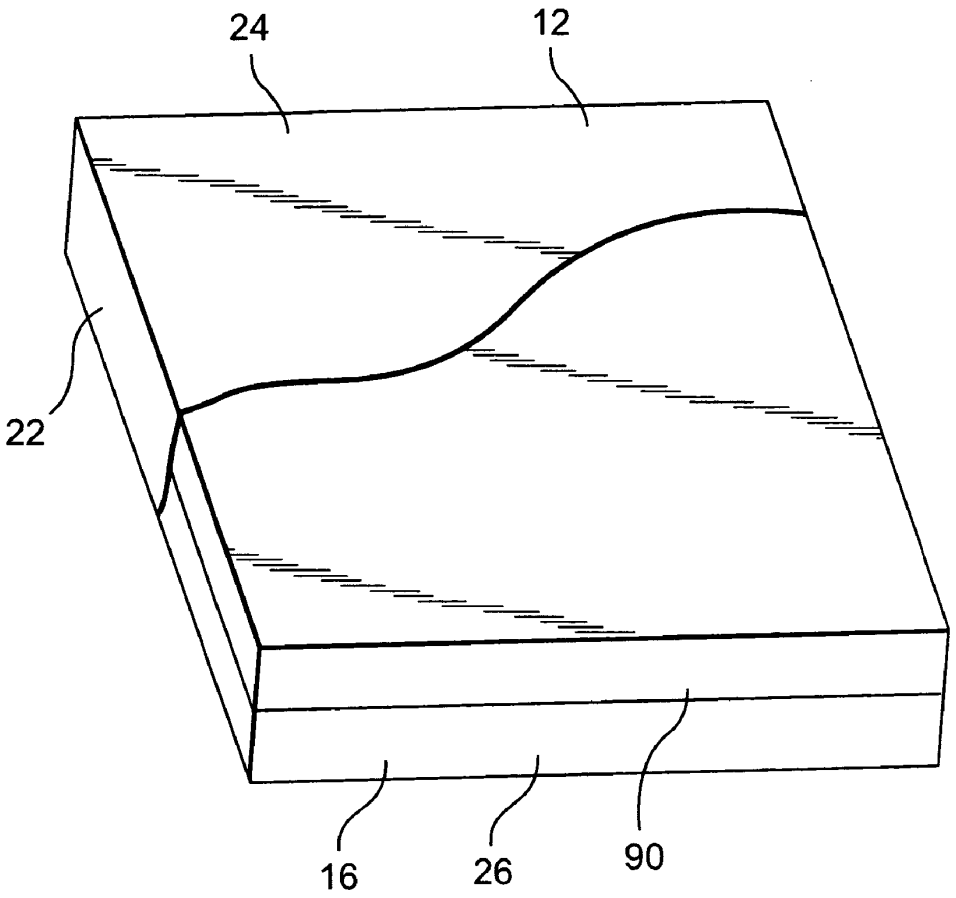

Fig. 2

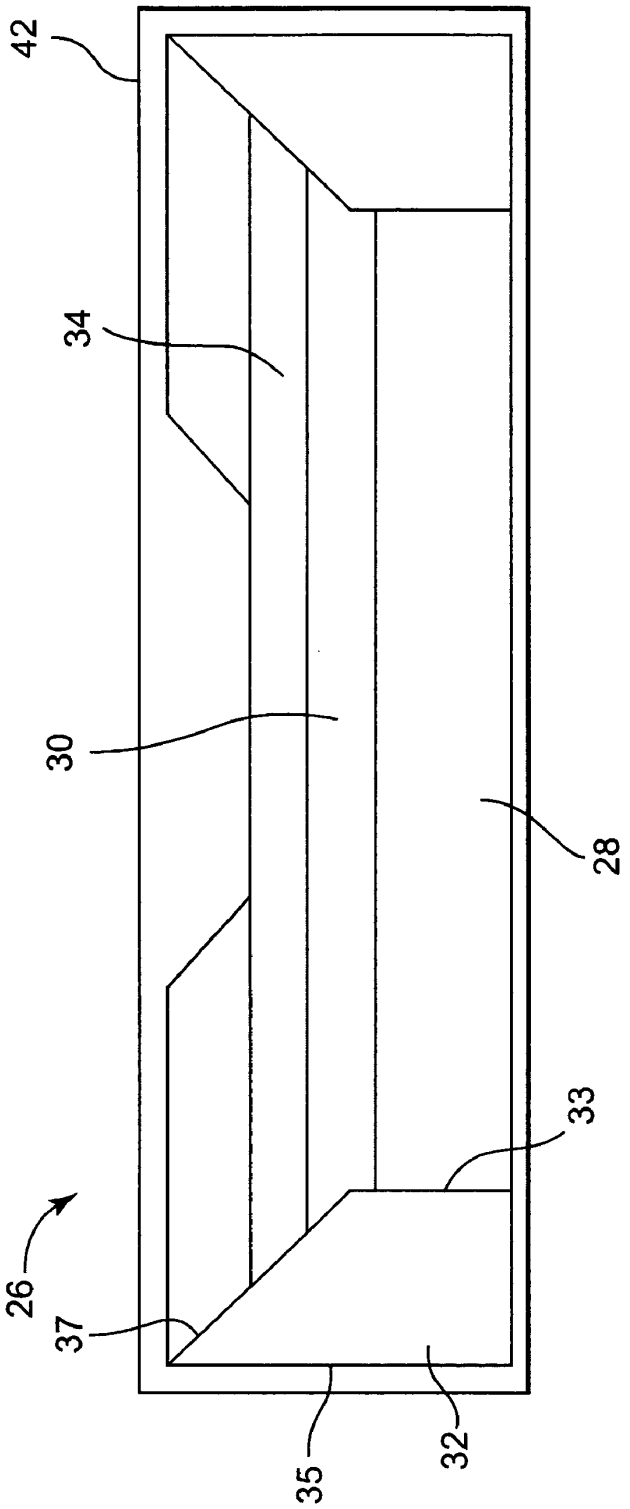

Fig. 3

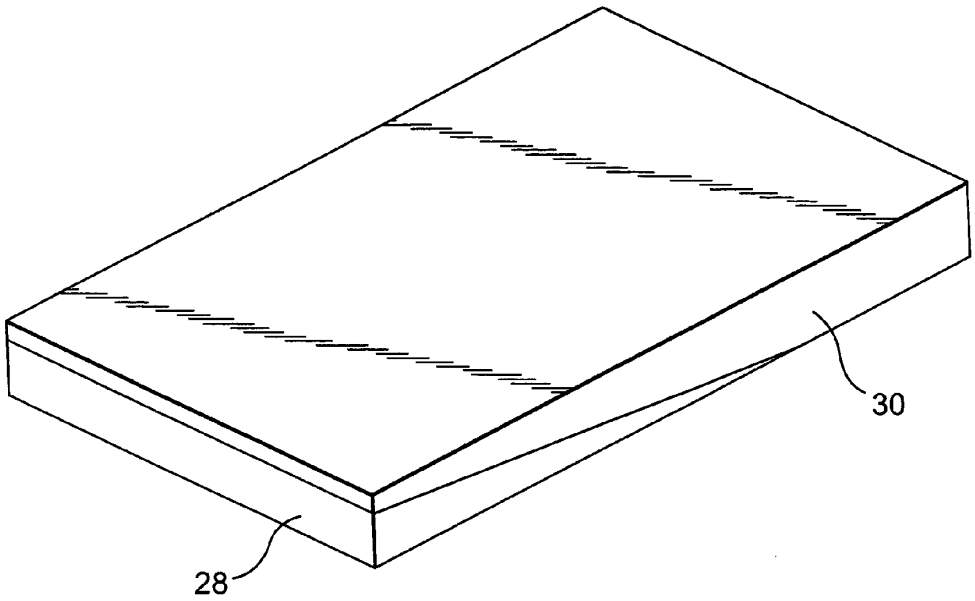

Fig. 3A

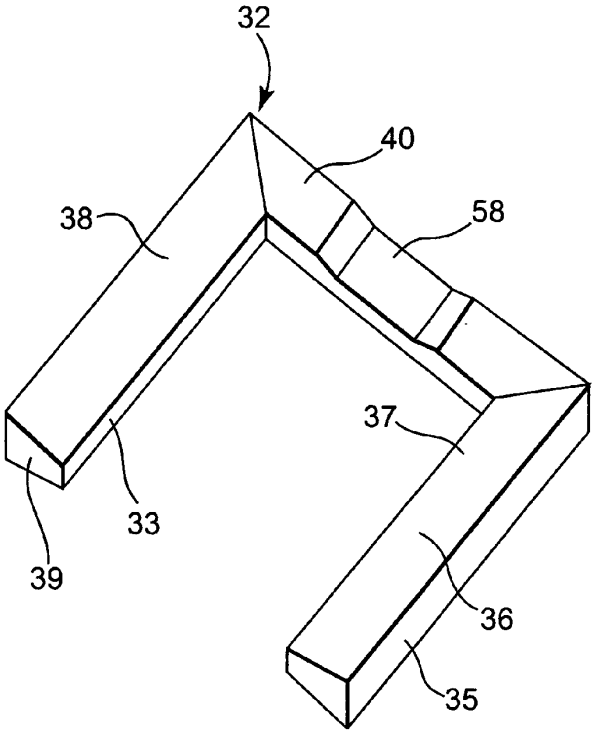

Fig. 3B

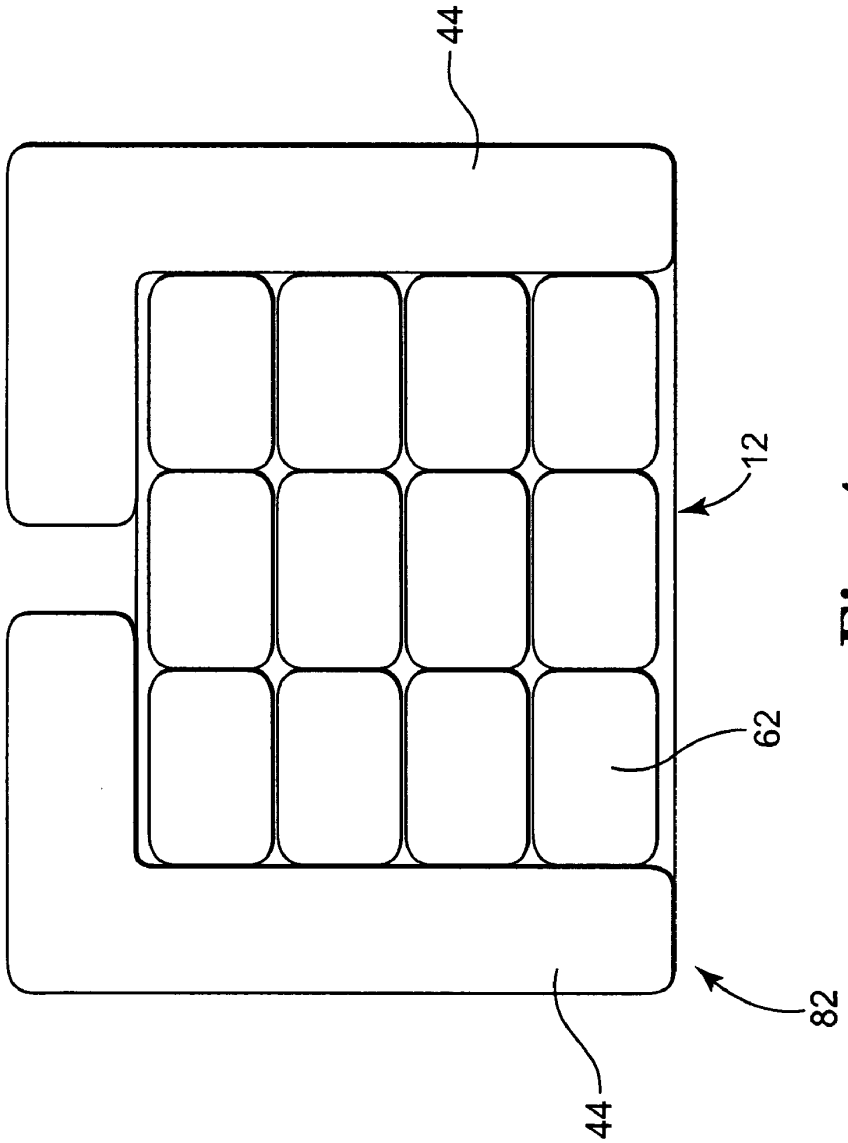

Fig. 4

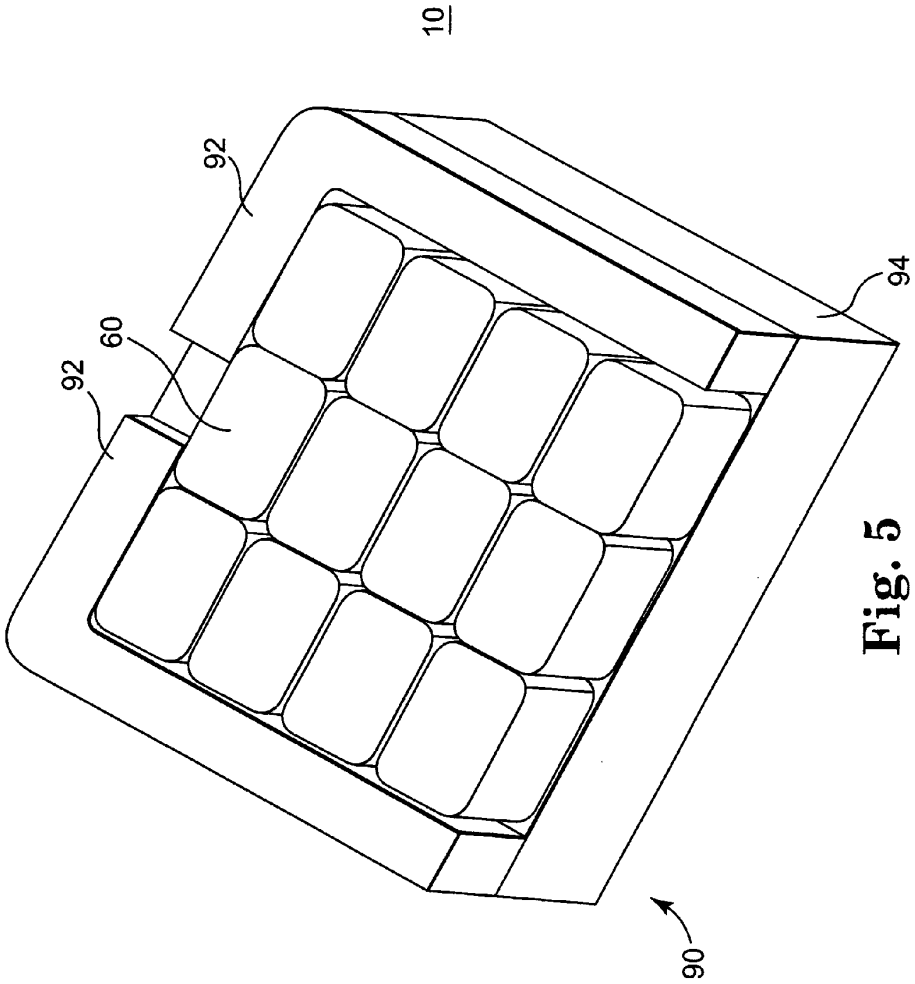

Fig. 5

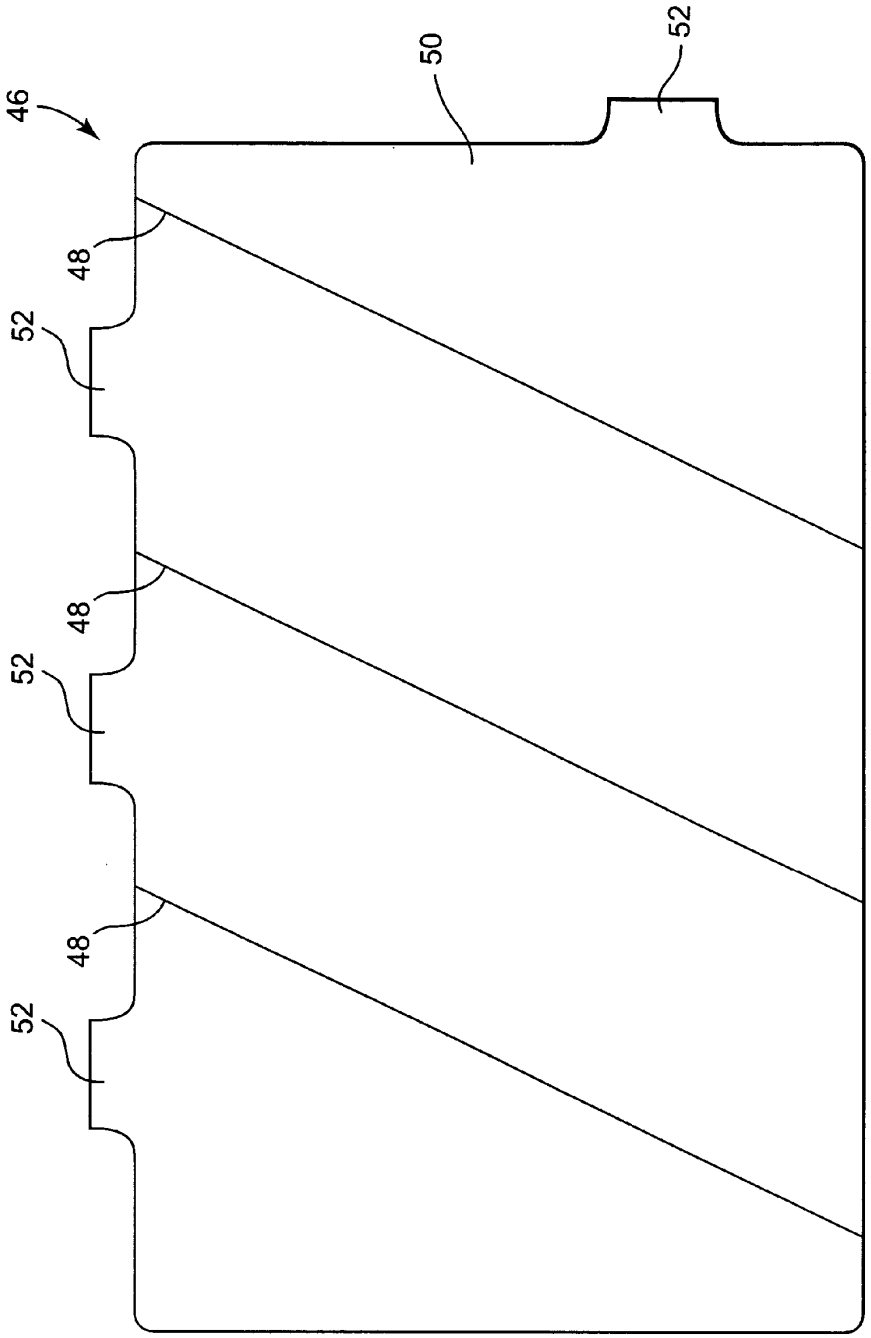

Fig. 6

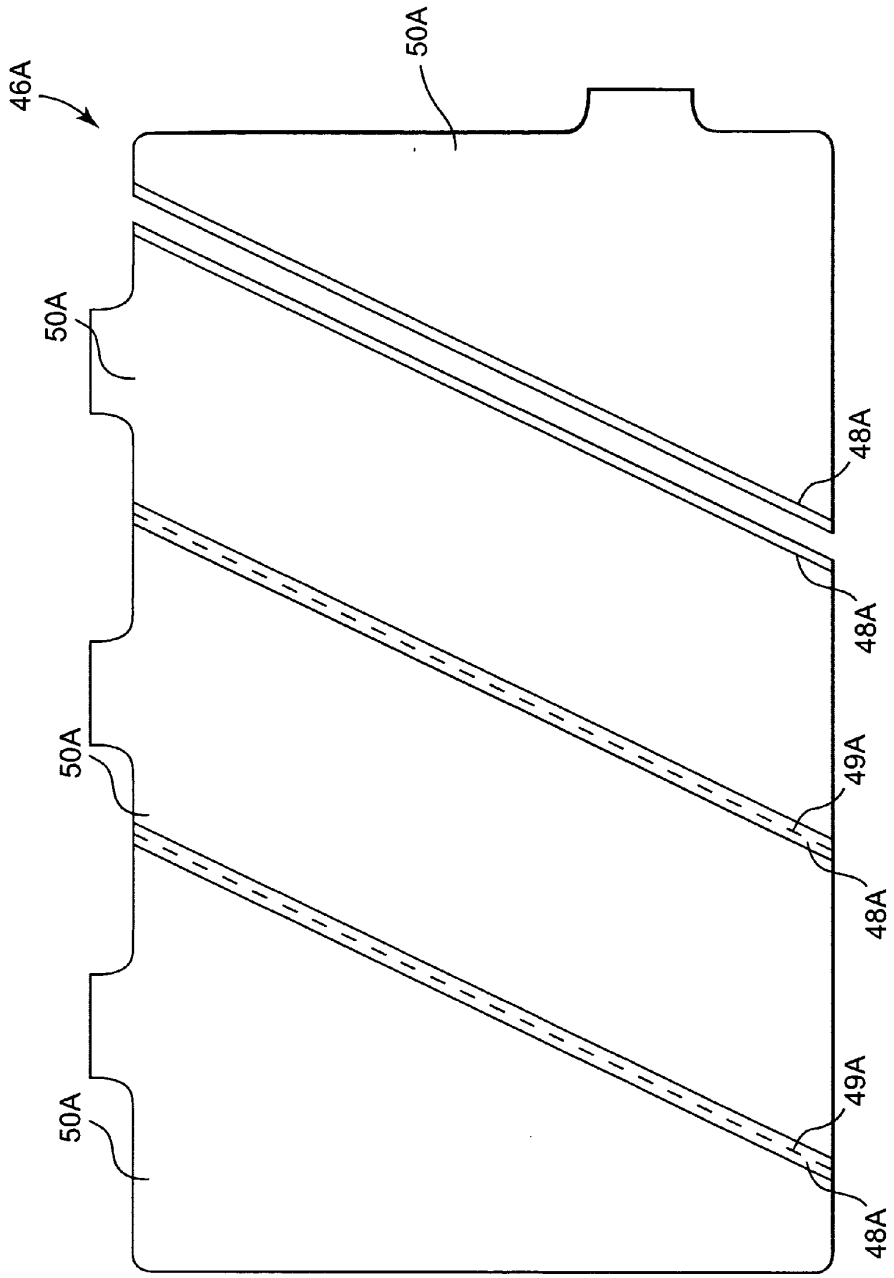

Fig. 6A

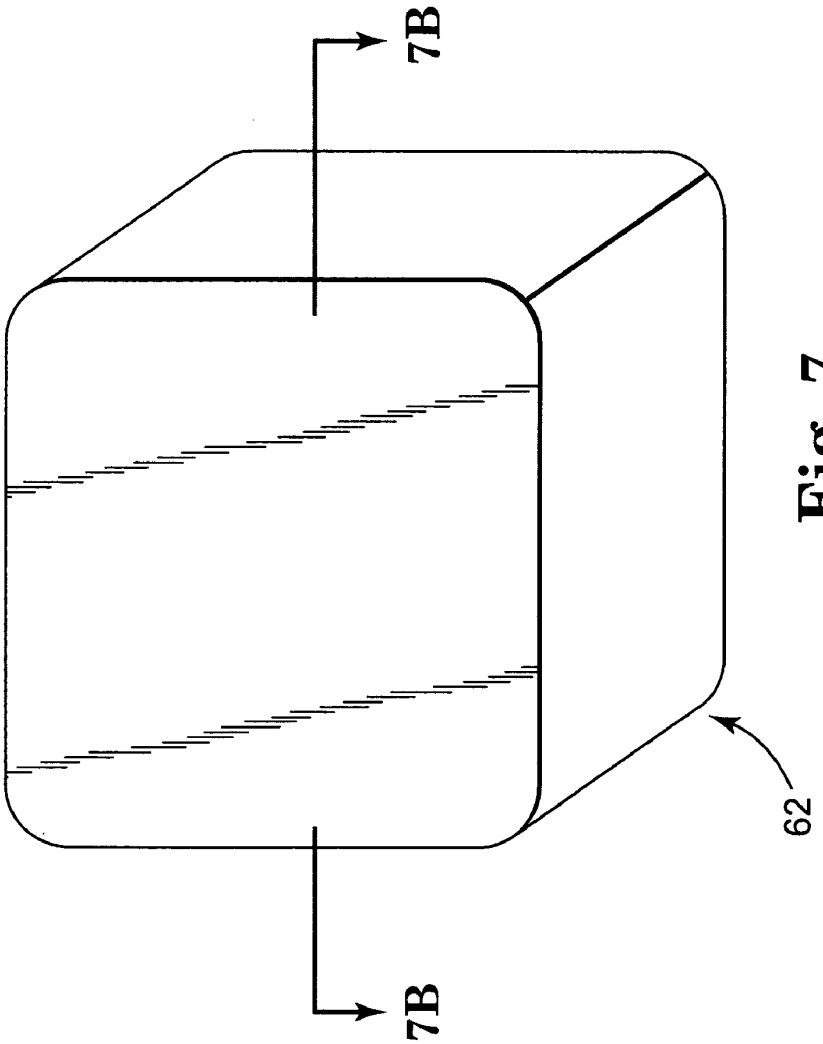

Fig. 7

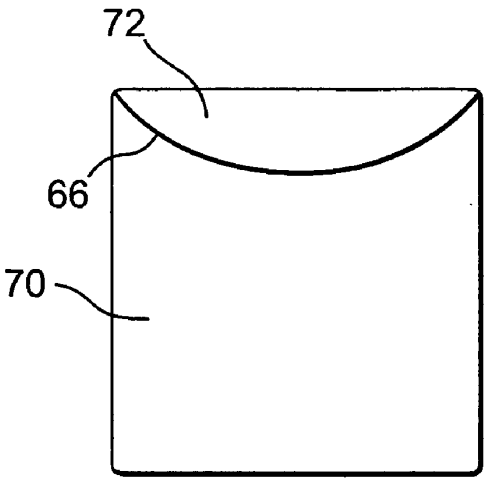

Fig. 7B

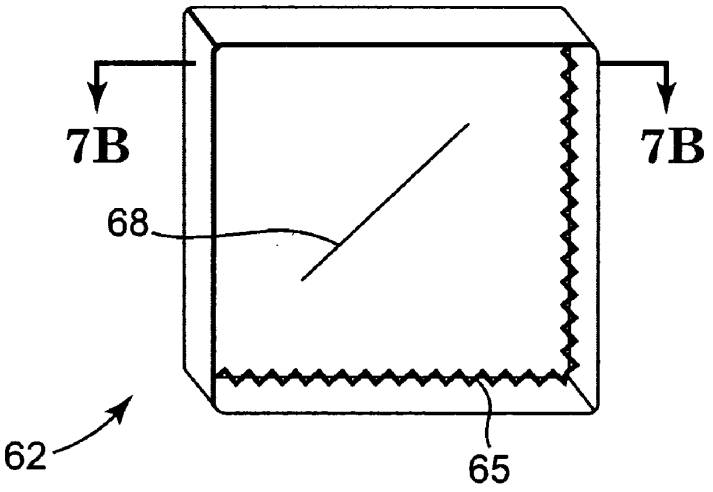

Fig. 7A

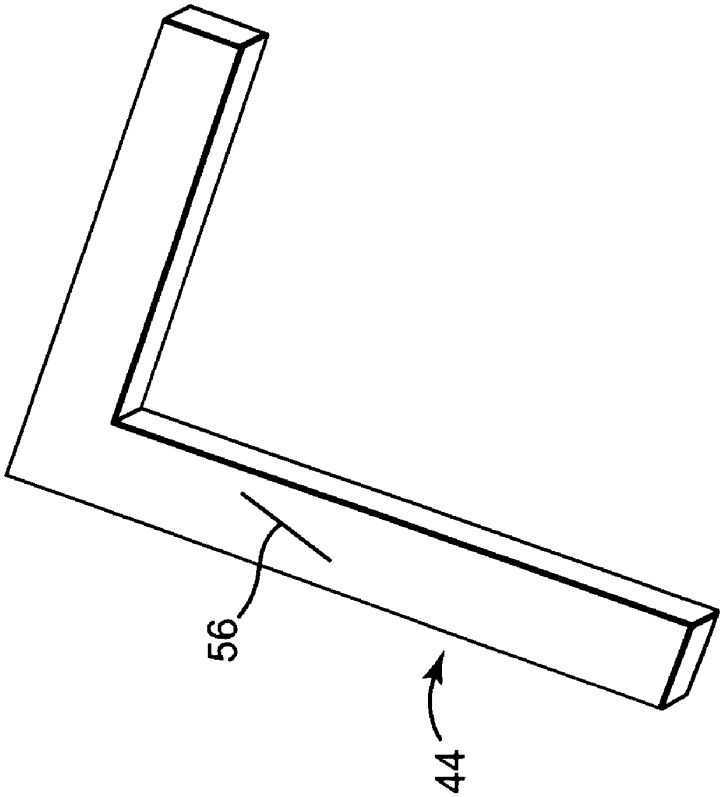

Fig. 8

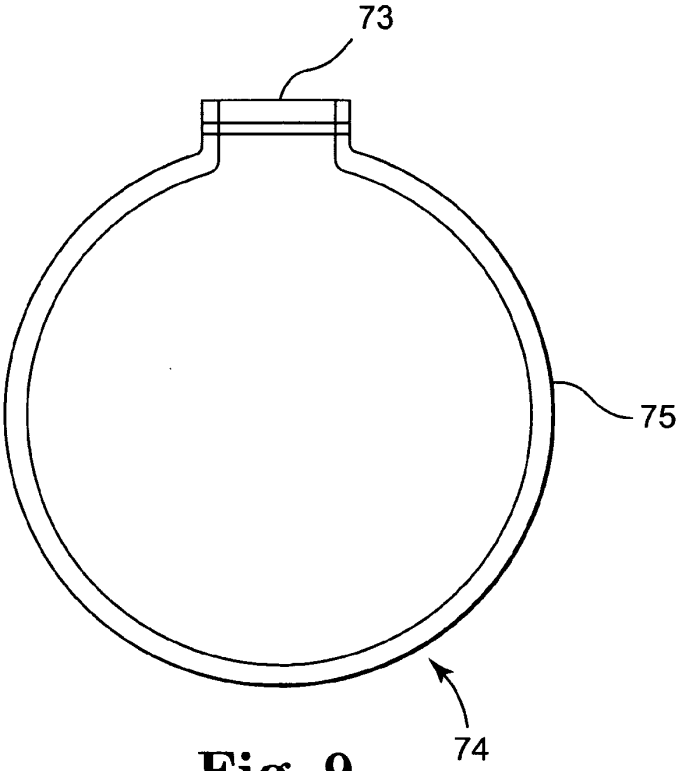

Fig. 9

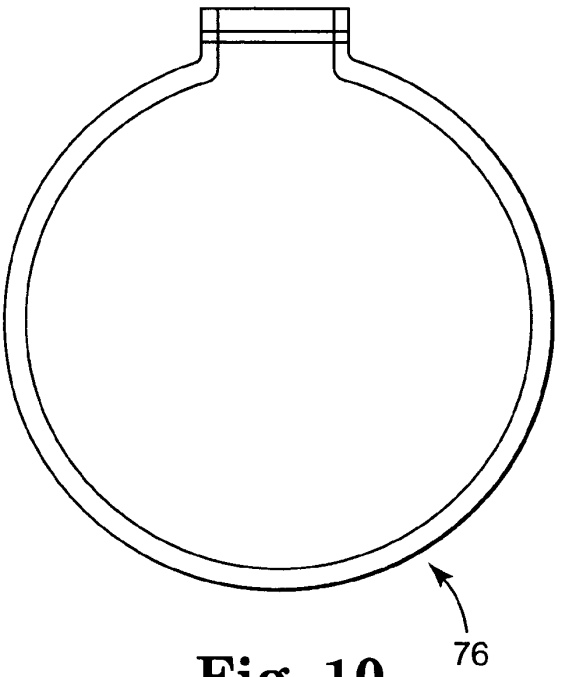

Fig. 10

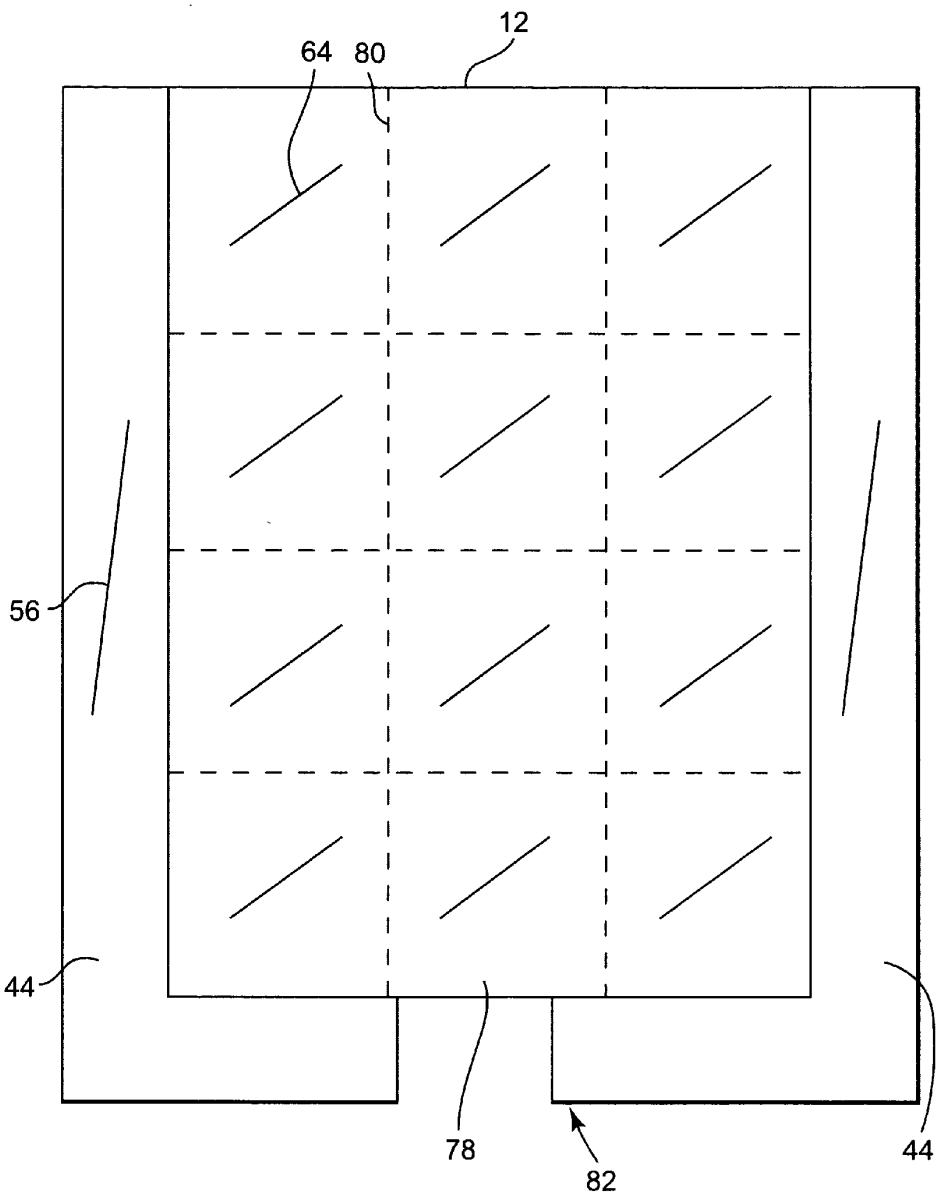

Fig. 11

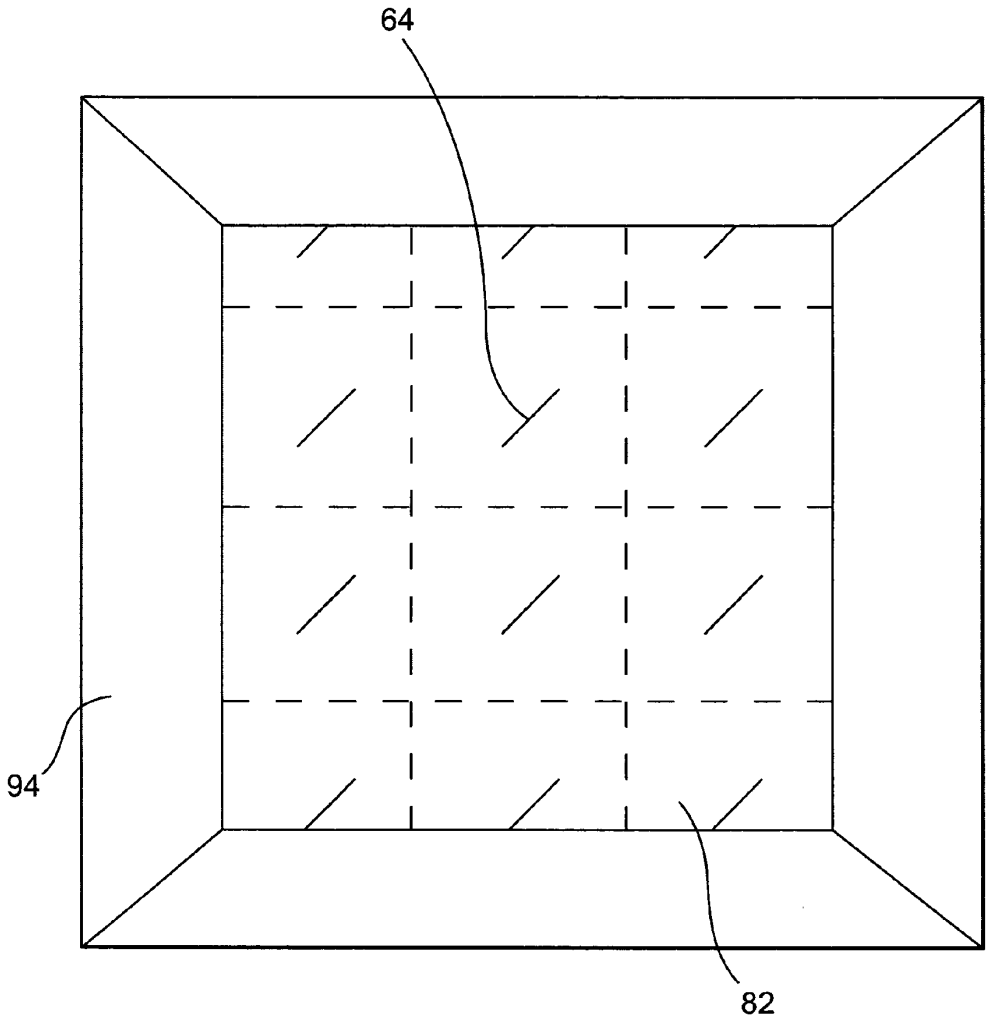

Fig. 12

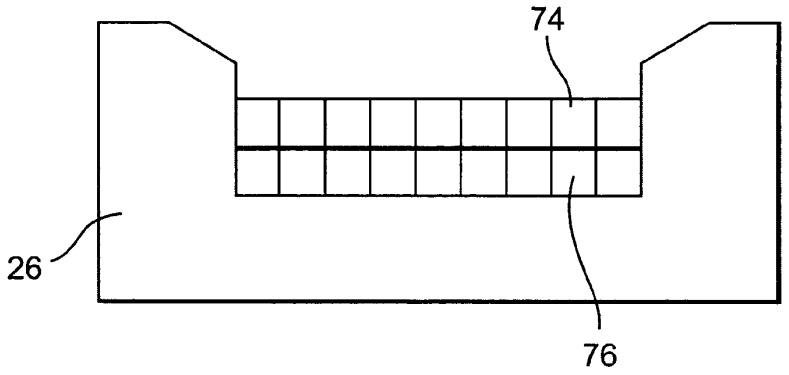

Fig. 13

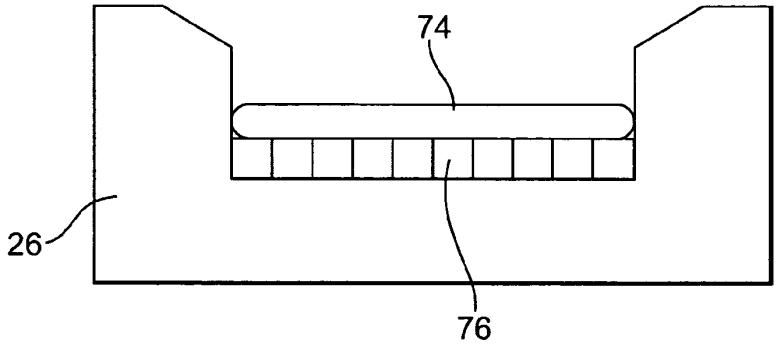

Fig. 14

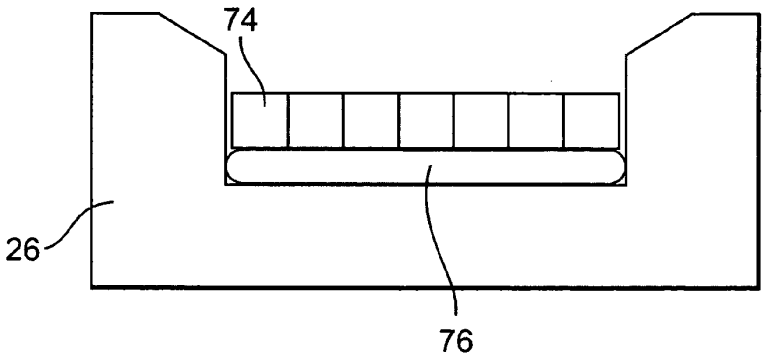

Fig. 15

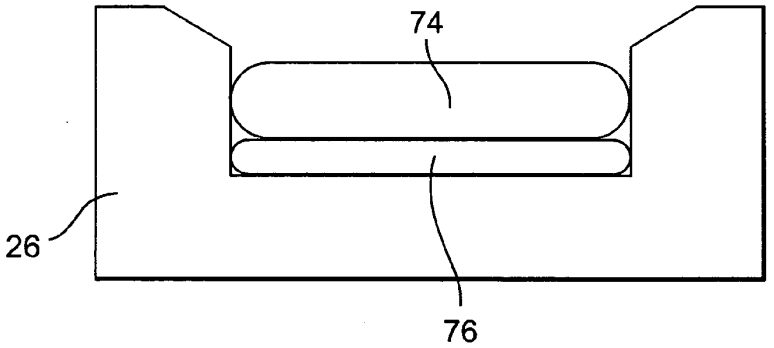

Fig. 16

CUSHION FOR A WHEELCHAIR

[0001] This application claims the benefit of U.S. Provisional Application No. 60/421,212 filed Oct. 25, 2002.

FIELD OF THE INVENTION

[0002] The invention relates to wheelchairs. More specifically, it relates to cushions which are adapted to be used in wheelchairs.

BACKGROUND OF THE INVENTION

[0003] The prevention of the formation of pressure sores is a desirable goal when designing a wheelchair cushion. It is known that skin that is subjected to high pressure, high temperatures, moisture build up, and shear over prolonged periods of time is susceptible to tissue stress and breakdown that can cause the formation of pressure sores. While heat and moisture are generally believed to be significant factors that lead to the formation of pressure sores, the relative contribution of these factors as causative agents for pressure sores is only now beginning to be understood. There is now evidence that the presence of constant pressure on tissue combined with increasing temperature generates a proportional increase in pressure sore formation. It has been shown that increases in the moisture level generally follow rises in skin temperature, and that moisture is also a significant influence in the formation of pressure sores. Therefore, reducing skin temperature also correlates to a reduction of moisture accumulation in the seating environment, further reducing the likelihood of pressure sore formation.

[0004] The need to reduce the maximum temperature and the time averaged temperatures to which the skin is exposed is demonstrated by the fact that metabolic tissue stress increases with rising temperature. This concept is predicted by the Arrhenius equation:

$$k=A*\exp^{(-E_a/R*T)}$$

[0005] where k is the rate coefficient, A is a constant, E_a is the activation energy, R is the universal gas constant, and T is the temperature (in degrees Kelvin). R has the value of 8.314×10^{-3} kJ $mol^{-1}K^{-1}$.

[0006] The equation indicates that the biochemical reaction rate, and thus the cellular metabolic rate, increases as temperature increases. Application of the Arrhenius equation shows that for every 10° C. increase in temperature, the reaction rate and thus metabolic substrate requirement doubles. Correspondingly, as skin temperature goes from 28° C. to 35° C., which represents the rise of normal skin temperature in air to temperature when seated, the tissue metabolic rate would show a 50% increase. This metabolic rate increase occurs at the same time that the load created by sitting is applied to the tissue of a buttock, restricting or occluding blood flow by mechanical compression. As a result, the buttock tissue has increased demand for oxygen and metabolic nutrients, while at the same time diminishing their availability, potentially resulting in cellular metabolic deficit or cellular stress. In addition, the construction materials used in seat cushions, as well as clothing materials worn by the user or blankets, wraps, or the like, upon which the user might be seated, are typically found to be insulative, making the temperature related stress on skin under these conditions even worse. The insulative nature of these layers can, for example, maintain up to a 13° C. temperature difference between core temperature and outer layer surface temperature. Thus, a cushion that could reduce the temperature on the user's skin under these conditions would be desirable.

[0007] Stability of the wheel chair cushion is another important factor. Stability is normally defined as the ability of a cushion to maintain the cushion user in the same position as when they were seated or, at least to reduce movement of the user from the cushion. Many currently available cushions allow the user to slide, shift, or to rock from side to side during use of the wheelchair. Typically, providing stability in a proximal area, that is in the pelvic area, will improve stability throughout the lower portion of the user's body. Therefore, a cushion designed to improve the stability of the user within the wheelchair would be desirable.

SUMMARY OF THE INVENTION

[0008] The present invention is directed towards a seat cushion for a wheel chair that employs a heat absorbing material, such as a phase change material (PCM), which will interact with the user's skin to assist in removing heat and reduce the likelihood that the user will suffer from pressure sores. A cushion with a properly chosen heat absorbing material positioned within the cushion can absorb heat from the user's body despite the insulative properties of the user's clothing and outer layers of the cushion itself. One aspect of the invention includes PCM located in isolated pockets within a cushion matrix to provide effective temperature reduction and at the same preventing excessive cooling. Alternatively, the invention may include a PCM that can be located uniformly throughout the cushion or a substantial part of the of the cushion without causing excessive cooling.

[0009] Selection of the proper PCM is based on matching the temperature profiles observed in wheelchair users to the available PCMs performance ranges in combination with the use of various insulative materials that comprise the various layers of the cushion to help keep the user's skin temperature within a desired range of 30° C. to 31° C. While it is generally believed that PCMs are an acceptable heat absorbing material, other materials with heat absorbing properties may be used to achieve similar results, including, for example, urethane gels with carefully designed specific heat characteristics.

[0010] The present invention is also directed at providing improved stability for the wheelchair user when sitting in the chair. The present invention typically includes a support rail that is positioned along the perimeter of the cushion matrix at a left-side, right-side and back side of the cushion. At least a portion of the support rail on the back side has a notch or recess to provide relief for the user's sacrum. The present invention also in one embodiment includes a cushion base, which is positioned below the cushion matrix and the support rail and provides additional stability and cushioning.

BRIEF DESCRIPTION OF THE DRAWINGS

[0011] **FIG. 1** is an isometric view of a first embodiment of the invention, showing top, left-side and front surfaces of a cushion.

[0012] **FIG. 1A** is an isometric view of the first embodiment the cushion, showing bottom, right-side and back surfaces.

[0013] **FIG. 2** is an isometric view of the first embodiment of the cushion with a portion of a cover removed, revealing a cushion base and a cushion matrix.

[0014] **FIG. 3** is a cross-sectional front view of the first embodiment of the cushion base.

[0015] **FIG. 3A** is an isometric view of an interior portion of the cushion base, including and upper and lower base member.

[0016] **FIG. 3B** is an isometric view of a outer portion of the perimeter of the cushion base.

[0017] **FIG. 4** is a top view of the cushion matrix of the first embodiment, showing support rail and cushion module carriers.

[0018] **FIG. 5** is an isometric view of the cushion matrix of the first embodiment, showing a base carrier attached to the support rail and cushion module carriers.

[0019] **FIG. 6** is a side view of a support rail bladder of the first embodiment, designed to accept cushion material and sized to fit within a support rail carrier.

[0020] **FIG. 6A** is a side view of the support rail bladder, showing a portion of the support rail bladder separated into two sections along an optional perforations along a series of dividers.

[0021] **FIG. 7** is an isometric view of a top and two sides of the cushion module carrier of the first embodiment.

[0022] **FIG. 7A** is a cross-sectional side view of the cushion module carrier of the first embodiment, showing primary and secondary interior volumes.

[0023] **FIG. 7B** is an isometric view of a bottom and two side so the cushion module carrier of the first embodiment, showing the primary interior volume and an aperture for access to the secondary interior volume.

[0024] **FIG. 8** is an isometric view of a portion showing the bottom and two sides of a portion of the support rail carrier of the first embodiment.

[0025] **FIG. 9** is a side view of a cushion bladder of the first embodiment, designed to accept thermal transfer and/or cushion material and sized to fit within the primary or secondary interior volume of the cushion module carrier.

[0026] **FIG. 10** is a side view of a cushion bladder of the first embodiment, designed to accept thermal transfer and/or cushion material and sized to fit within the primary or secondary interior volume of the cushion module carrier.

[0027] **FIG. 11** is a bottom view of a portion of the cushion matrix of the first embodiment, showing support rail and cushion module carriers.

[0028] **FIG. 12** is the bottom view of the cushion matrix of the first embodiment, showing a base carrier.

[0029] **FIG. 13** is a second embodiment of the invention, showing a cushion matrix with a plurality of thermal transfer elements located atop a plurality of cushion elements.

[0030] **FIG. 14** is a third embodiment of the invention, showing a cushion matrix with a single thermal transfer element located atop a plurality of cushion elements.

[0031] **FIG. 15** is a fourth embodiment of the invention, showing a cushion matrix with a plurality of thermal transfer elements located atop a single cushion element.

[0032] **FIG. 16** is a fifth embodiment of the invention, showing a single thermal transfer element located atop a single cushion element.

DETAILED DESCRIPTION OF THE PREFERRED EMBODIMENTS

[0033] Referring to **FIGS. 1, 1A**, and **2**, cushion **10** is a first embodiment of a wheelchair cushion designed to fit in a seat area of a wheelchair and be sat upon by a user of the wheelchair. Cushion **10** can have a rectangular shape, although its overall shape can be made to vary widely. Cushion **10** typically has six surfaces, defined for the purposes of this document as a top surface **12**, a bottom surface **14** that opposes the top surface **12**, a front surface **16**, a back surface **18** that opposes the front surface **16**, a left-side surface **20** and a right-side surface **22** that opposes the left-side surface **20**. Cushion **10** has a width defined as a distance (typically 12-26 inches) from the left-side surface **20** to the right-side surface **22**, a depth (typically 12-18 inches) defined as a distance from the front surface **16** to the back surface **18** and a thickness (typically up to 6 inches) defined as a distance from the top surface **12** to the bottom surface **14**. These dimensions can be varied to suit a particular need, either over the entire cushion, or in specific portions of the cushion. Because the actual shape of the cushion may not be exactly or even approximately rectangular, the width, depth and thickness distances are to be measured from the extreme points on every defined surface.

[0034] Cushion **10** normally includes a number of internal components, including a cushion base **26** and a cushion matrix **90**, each shown in block form in **FIG. 2**, which are located within or covered at least partially by a cushion cover **24**, which is shown cutaway in **FIG. 2**. At least part of cushion cover **24** may be made from a moisture impervious material, such as urethane backed stretch fabric (such as Penn Nyla™), polyethylene film, polypropylene film, polyester film, or other polymeric films. In addition, at least a portion of cushion cover **24** may be made of a combination of materials, including laminates made of, for example, woven, non-woven, or other fabrics and polymeric films such as Lycra, PenNyla, Slipstop and canvas. For example, the bottom surface **14** may be made of a material that has a suitably rough finish so as to provide a substantially non-slip or slip-resistant interface to a top surface of a seat portion of a wheelchair. An example of the type of cushion cover that may be used with the current invention is disclosed in U.S. Pat. No. 5,592,706.

[0035] Cushion cover **24** may include any number of pieces of material, sewn, glued, ultrasonically welded, heat sealed, zippered, hook-and-looped, or otherwise attached together. For example, cushion cover **24** may be formed from six pieces of material, each of which substantially forms one of the six surfaces of cushion **10**. Alternatively, any single piece may form part or all of one or more of the surfaces of cushion **10**. Of course, it follows that a single piece may be formed and its edges attached to itself so that cushion cover **24** consists solely of that single piece and any attachment mechanisms or methods. It is to be further understood that some pieces of cushion cover **24** may overlap other pieces.

[0036] Cushion cover **24** normally includes an access structure to allow the insertion of the internal components within it. The access structure typically includes a zipper that runs along the back surface and parts of the left and right surfaces of cushion **10**. When the zipper is opened, cushion cover **24** is positioned to accept the internal components. When the zipper is closed, the internal components are in one embodiment completely enclosed within cushion cover **24**. Alternatively, the access structure can take many different forms, including a surface that has one or more of its edges attached to the other surfaces by hook and loop fasteners, snaps, buttons, sandwich bag-like closures, micro-replicated surfaces, or any other fastening or enclosing mechanism. The cushion cover may also include one or more pouches or pockets provided for the convenience of the user, typically attached to or integrated within the right or left surface. In addition, the cover may include flaps or straps that extend from the surfaces of the cushion that can facilitate attachment to or retention on a wheelchair seating base or structural member.

[0037] Referring to **FIGS. 3, 3A**, and 3B, cushion base **26** has nearly the same width and depth as cushion **10**, although its dimensions are sufficiently small enough so that cushion base **26** will fit within cushion cover **24**. Cushion base **26** typically includes a lower base member **28**, an upper base member **30** and an outer base member **32**.

[0038] Outer base member **32** typically is a "U-shaped" component that forms left, back and right edges of cushion base **26** and can be constructed from a material such as Ethafoam™ polymeric foam from Dow. One wheelchair cushion including Ethafoam™ polymeric foam is the Cloud cushion from Otto Bock. Such a material is rigid enough to provide the cushion with stability, yet compressible to provide some cushioning effect. Outer base member **32** can have a bottom surface that is substantially flat and an outer surface **35** and inner surface **33** that are substantially straight. In the first embodiment, a distance between the inner surface **33** and the outer surface **35** of outer base member **32** is approximately one inch, although the distance between the inner surface **33** and the outer surface **35** may vary within an embodiment and/or between alternate embodiments.

[0039] Outer base member **32** has a planar top surface **37** that is typically not normal to either the inner surface **33** or the outer surface **35**, and is beveled at its corners. The top surface **37** typically has a 45 degree angle from the outer surface **35** of approximately 45 degrees. In the first embodiment, the thickness of the inner surface **33** is approximately 1.25 inches. Correspondingly, the thickness of outer surface **35** is approximately 2.25 inches. It is to be understood that the angle of the top surface **37** and the thickness of the inner surface **33** and/or the outer surface **35** can be varied without departing from the scope of the invention. It is to be further understood that the outer base member **32** may take on a variety of different shapes. For example, on a portion of the back edge, the top surface **37** of the outer base member **32** may be normal to the inner surface **33** and outer surface **35** so that the height of the outer base member is, for example, approximately 1.25 inches. In another embodiment, the top surface **37** of the outer base member **32** may be normal to the inner surface **33** and outer surface **35** and an opposing bottom surface may be not normal to the inner surface **33** and outer surface **35**. Alternately, the top or bottom surface may not be planar, but may have a generally decreasing height in the form of a step or steps or a concave shape, or a more irregular shape.

[0040] Outer base member **32** is formed by attaching a left base rail **36** and a right base rail **38** to a back base rail **40** with an adhesive. The mating surfaces of rails **36**, **38** and **40** are typically mitered so that, when combined and attached the resultant outer base member **32** has a substantially continuous beveled top surface **37** as shown in **FIG. 3B**. While the top surface **37** has a continuously beveled surface from the outer **35** to the inner surface **33** over most of the outer base member **32**, a portion of the back base rail **40** has a sacral notch **58**, where top surface **37** is discontinuous. In the portion of the back base rail **40** that has the sacral notch, the thickness back base rail may be diminished, for example, such that the top surface **37** is normal to the inner surface **33** to the outer surface **35** so that the thickness of the back base rail **40** in this area is equal the typical thickness of the inner surface **33**.

[0041] It is to be understood that outer base member **32** may be constructed of any number of components. It is to be further understood that although outer member **32** is shown as having squared corners, outer member **32** may have any shape that may define an outer shape of cushion **10**, including, but not limited to, rounded corners. Lastly, each of the rails may be formed from any number of rail members.

[0042] Lower base member **28** is, in the first embodiment, constructed of Ethafoam® polymeric foam from Dow, although a number of different materials or combinations of materials may be used including other polymeric foams. Lower base member **28** has a width that is approximately equal to a distance between the inside surface **33** of the left base rail **36** and right base rail **38** that form part of outer base member **32**. Lower base member **28** can have a depth of nine to ten inches, which is substantially less than the distance between the front surface **39** of outer base member **32** and the inside surface of the back edge of outer base member **32**. Lower base member **28** has a maximum thickness at its front surface, the maximum thickness being in one embodiment less than the thickness of the inner surface **33** of outer base member **32**. For example, the maximum thickness of lower base member **28** might be approximately 1 inch. The thickness of lower base member **28** in one embodiment tapers to a near zero thickness at its back surface. Lower base member **28** is in one embodiment attached to outer base member **32** with an adhesive between the left and right edges of lower base member **28** and the inner surface **33** of outer base member **32** so that the bottom and front surfaces of lower base member **28** and outer base member **32** are substantially flush with one another.

[0043] It is to be understood that other configurations of lower base member **28** may be acceptable. For example, lower base member **28** can be constructed of any number of individual components or molded as a single unit. Alternatively, lower base member **28** may be integrated into the outer base member **32** or any number of pieces that are assembled to form the outer base member **32**. The structure formed by the attachment or integration of lower base member **28** and outer base member **32** provides a unique pelvic captivation structure, which provides desired improved stability.

[0044] Upper base member **30** is typically constructed of urethane, although other materials may be used. Examples

of possible materials include light weight compressible elastomeric plasticized styrenic triblock co-polymers, a conglomeration of small displaceable pellets or beads of cushioning materials, gels or elastomers (e.g. Technogel™) or zero memory materials (e.g. Floam™). Upper base member **30** has a width that is in one embodiment approximately equal to that of lower base member **30** and a depth approximately equal to the distance between the front surface **39** and the inner surface **33** of the back rail **40** of outer base member **32**. Upper base member **30** is shown in **FIG. 3** as having a thickness at its front surface approximately equal to, although slightly larger than, a difference of the thickness of the inner surface **33** of outer base member **32** and the thickness of lower base member **28** at its front surface. The thickness at the front surface of upper base member **30** may be substantially more or less than said difference. The thickness of upper base member **30** typically increases along a taper on its bottom surface running from its front surface along the depth of upper base member **30** that is approximately complementary to the taper on lower base member **28** until the thickness of upper base member **30** is approximately equal to the height of the inner surface **33** of outer base member **32**, starting at the back surface of lower base member **28**. Upper base member **30** in one embodiment has a substantially constant thickness on its remaining depth to its back surface. This constant thickness may be more or less than the height of the inner edge of outer base member **32**. It is to be further understood that the thickness of the upper and lower base members can vary without departing from the scope of the invention.

[**0045**] Upper base member **30** is in one embodiment attached to lower base member **28** with an adhesive along the top surface of lower base member **28** and the tapered portion of the bottom surface of upper base member **30**. Upper base member **30** may also be attached to the inner surfaces of outer base member **32** along the left right and back surfaces of upper base member **30**. The combination of lower base member **28** and upper base member **30** can have a substantially rectangular cross-section so that, when attached to outer base member **32**, resulting in a bottom surface that is substantially even. It is to be understood however, that upper base member **30** is not necessarily attached to either lower base member **28** or outer base member **32**. Upper base member **30** may merely be located within cushion **10** so that it rests approximately in relation to lower base member **28** and outer base member **32** as described above.

[**0046**] Referring again to **FIG. 3**, cushion base **26** may further include a base fill member **34**, which is located on top of upper base member **30**. Base fill member **34** is a substantially flat, thin sheet of urethane or other material that has the substantially same width and depth as upper base member **30**. Base fill member **34** may be attached to upper base member **30** with a suitable adhesive. Possible adhesives include 3M Spray Foam Adhesive, 3M Super 77. Spray Adhesive, Sure bonder 355. Spray adhesive and 3M Fastbond Foam adhesive 100 (water based). Alternatively, base fill member **34** is not attached to upper base member **30** or is attached with another suitable mechanism.

[**0047**] Cushion base **26** is typically surrounded with a base cover **42**, which substantially encloses cushion base **26**. Base cover **42** is in one embodiment constructed of a flexible, moisture-impervious material such as a thermoplastic, urethane, neoprene, poly-isopropylene, or other suitable material. Base cover **42**, for example, may include two sheets of such material and an attachment structure so that cushion base is substantially enclosed and sealed within base cover **42**. The attachment structure may include an adhesive, ultrasonic or heat weld, or any other suitable structure.

[**0048**] Referring to **FIGS. 2 and 5**, cushion matrix **90** is typically positioned above cushion base **26** within cushion **10**. In the first embodiment, cushion matrix **90** includes several cushion modules **60**. In addition, it may include two support rails **92**, which typically substantially surround the several cushion modules **60** on their left, right and back sides. The combination of the support rails and cushion modules that make up the cushion matrix **90** are arranged and attached to each other to form cushion matrix **90**, although attachment is not necessary. In the first embodiment, each support rail and cushion module includes at least one cushioning element and a carrier, which is constructed to accept the cushioning element.

[**0049**] Cushion matrix **90** may also include a base carrier **94**, which is designed to fit over and accept cushion base **26**. Base carrier **94** can be comprised of a flexible, stretchable and breathable fabric assembly, that can be attached to the perimeter of the combination of cushion modules, and shaped and formed to accept cushion base **26**. Typically, the fabric selected for the base carrier **94** is the same as that selected for the cushion module carrier **62**, although other suitable fabrics may be used such as a Nylon stretch knit also known as Lycra®. Each carrier is typically constructed so that it is properly sized and shaped to provide an internal volume that can accept appropriate cushioning elements. In addition, each carrier typically is constructed with an aperture or other appropriate device to allow insertion or removal of the cushioning elements from the carrier.

[**0050**] As shown in **FIG. 5**, each support rail **92** is sized and located such that it is positioned along the entire depth of the cushion **10** and extends approximately three inches along the width of the left or right edge of the cushion **10** as well as extending approximately three inches along the back edge of cushion **10**. Typically, no support rail **92** extends through the middle portion of the width of the back edge of the cushion **10** that coincides with the portion of the back base rail **40** where the top surface **37** is discontinuous. As described above, this structure is generally included to provide sacral support for the user while at the same time the notch forms a cutout for the sacrum and reducing the possibility of point loading. A filler of lighter, more compressible material than the rails may be placed in the notch region to provide further sacral support at the notch.

[**0051**] It is to be understood that the support rails **92** may have alternate arrangements without departing from the scope of the invention. For example, the support rail may rest upon any or all portions of the left, right and back edges of the cushion base **26**, including the portion which has been descried as the sacral notch. In addition, while the support rail **92** is typically sized and located so that it extends along the outermost three inches of the left, right and back edges of the cushion, the exact size and location of the support rails **92** may vary along different parts of a cushion or along the entire cushion.

[**0052**] Each support rail **92**, in one embodiment, includes a support rail carrier **44**. As described above, support rail

carrier **44** normally includes an access mechanism such as aperture **56**, formed into support rail carrier **44** by any suitable means, or any other mechanism that allows access to an internal volume of support rail carrier **44**.

[**0053**] Support rail **92** typically includes at least one support rail bladder **46** shown in **FIGS. 6 and** 6A. A typical cushion **10** can have two or more support rail bladders, with one or more located on each of the left and right edges of the cushion and each support rail bladder shaped to form at least a portion of the back edge of the cushion. Any number of support rail bladders of similar or varying shapes and sizes may be included to create the support rail **92**. The typical support rail bladder **46** includes a substantially rectangular bladder and is, in one embodiment, made of a flexible moisture-impervious material such as urethane. Further, the support rail bladder **46** may include one or more dividers **48**, which can partition the support rail bladder **46** into a plurality of discrete chambers **50**. Typically, divider **48** has a 45 degree angle with respect to the centerline of support rail bladder **46**, although the divider may have any angle without departing from the scope of the invention. The dividers **48** may be formed by welding the bladder to itself in specific locations using an ultrasonic or radio frequency welding process so that the discrete chambers are substantially sealed with respect to one another. Alternatively, the dividers may be formed by using any adhesive, bonding process, or any other suitable structure that will separate the said rail bladder into discrete chambers.

[**0054**] Further, each chamber may be constructed so that it has a mouth **52**, which provides access to the internal volume of the chamber so that each chamber **50** can accept a filler material within the internal volume. Typically, each chamber can be filled with an amount of filler material such as Floam or other similar material through a mouth **52**.

[**0055**] When a chamber **50** has received filler material through mouth **52**, mouth **52** can be subsequently sealed with a structure, in one embodiment, similar to those that can be used to create divider **48**. While the volume of each chamber **50** may be identical to every other chamber **50**, it is to be understood the volume of each chamber **50** and the amount of filler located within each chamber may vary with respect to other chambers. It is to be further understood that while the first embodiment shows a single support rail bladder **46** in each support rail, each support rail may include any number of support rail bladders, each of which may include any number of chambers, which may allow for varying the relative amount of fill in the right or left rail **92**. For example, as shown in **FIG.** 6A, any or all dividers **48**A may each include a perforation **49**A to allow the separation of one or more of the individual chambers **50**A of support rail bladder **46**A from each other.

[**0056**] The support rail carrier **44** typically accepts the support rail bladder **46** through the aperture **56**. The use of a support rail bladder **46** with multiple chambers **50** allows the support rail bladder to be more easily positioned evenly within the support rail carrier **44**. In addition, the plurality of chambers prevents the filler material from congregating in any one particular area of the support rail and thereby provides for a more consistent shape throughout the support rail. Once the support rail bladder is accepted within the support rail carrier, it is typically positioned so that it has a substantially consistent cross sectional area throughout the support rail, although it alternatively may have a significantly varying cross sectional area in different parts of the support rail.

[**0057**] Referring to **FIGS. 7, 7A** and **7**B each cushion module **60** in the first embodiment includes a cushion module carrier **62**. Cushion module carrier **62** is typically constructed from one or more flexible, stretchable, and breathable fabric pieces, such as a Nylon stretch knit also known as Lycra®, and can have a rectangular cross-section, as shown in **FIG.** 7B, although its shape may vary somewhat. The typical cushion module carrier **62** has an internal partition **66**, normally formed of similar fabric material as the outside surfaces, attached into the interior of cushion module carrier **62** along stitch pattern **65**. While the internal partition **66** is sewn to the cushion module carrier **62**, in one embodiment, other attachment mechanisms can be used. Internal partition **66** divides the resultant interior volume of cushion module carrier **62** into a primary internal volume **70** and a secondary internal volume **72**. An aperture **68** is formed into internal partition **66** by any appropriate means to provide access to the secondary internal volume **72**. Alternatively, any structure that provides a divided volume within the cushion module carrier and access to the volume partitions may be used.

[**0058**] Each cushion module **60** also typically includes a thermal transfer element **74** and a cushion element **76**. Referring to **FIG. 9**, thermal transfer element **74** includes a bladder typically constructed of a flexible, substantially moisture-impervious material such as urethane. Typically, the bladder is constructed of a number of pieces of urethane that are attached to each other to form a bladder with an internal volume. The urethane pieces are attached to each other using any acceptable bonding or adhesive methods or structures. For example, the pieces may be ultrasonically welded to form a seam **75**. The resulting bladder typically has a mouth **73**, which provides access to an interior volume so that the bladder can accept a filler, such as a phase change material, within the internal volume. After an amount of filler material has been placed inside of the thermal transfer element, the mouth **73** can be sealed using a bonding or adhesive method or structure similar to that used to form the interior volume of the thermal transfer element resulting in a substantially sealed element.

[**0059**] Thermal transfer element **73** typically includes a heat absorbing material, such as a phase change material (PCM), which is placed inside of the bladder. PCMs function by melting from a solid to a liquid, and in the process, absorbing heat. There is typically a difference between the melting point and the re-crystallization point of five to six degrees Celsius. It is desirable to use a PCM that maximizes heat absorption performance in a desired temperature range (endothermic part of the temperature cycle) while not increasing heat exposure on the lower end (exothermic part of the temperature cycle). By use of such a PCM, or combination of PCMs, the body temperature and, by association, the accumulation of body moisture or sweat is reduced and the occurrence of related pressure sores is thereby reduced. Note that the heat absorbing material can be selected with reference to desired clothing layers to be worn by the user in order to achieve a desired temperature profile.

[**0060**] Currently, paraffin based PCMs are preferred due to their ease of incorporation into a cushion. The preferred

PCM comes from the group of tetradecane, pentadecane, hexadecane, heptadecane, octadecane, nonadecane, eicosane, heneicosane and docosane. Of this group, octadecane and less so eicosane are particularly preferred at this time because of its performance and price. Nonadecane provides better performance, but is not readily available at low cost. Another preferred material is TH29, a naturally occurring hydrated calcium carbonate salt that melts at 29° C. and absorbs 170 kj/kg heat. A list of paraffinic and non paraffinic PCM materials is attached as Table 1 and Table 2, respectively.

[**0061**] Because the PCMs mentioned above have a tendency to conglomerate with successive melt and freeze cycles, microencapsulation of the PCM material and mixture with a material that prevents such conglomeration is desirable. Accordingly, Frisby Inc. Thermasorbe 83 (T83), a microencapsulated octadecane was chosen as the preferred PCM. The T83 was mixed with a Floam lubricant as described in U.S. Pat. Nos. 5,421,874, 5,549,743, 5,592,706 and 5,562,657. to create a slurry of PCM material used in the thermal transfer element **74**. Generally, surfactant and viscosity modified water based solvent or friction and viscosity modified oil based solvents would work well with an insoluble PCM. Alternatively, the PCM could be mixed with other fill materials such as particulates, beads, gels or fluids.

[**0062**] Referring to **FIG. 4**, carrier matrix **82** refers to a collection of carriers that are a part of cushion matrix **90**. In the first embodiment, carrier matrix **82** includes two support rail carriers **44**, and a collection of cushion module carriers **62**. In the first embodiment, each of the cushion module carriers **62** are substantially the same size and are arranged and attached together in a generally rectangular pattern. In addition, each of the support rail carriers **44** are arranged and attached to the collection of cushion module carriers so that one edge of the support rail carriers **44** is even with the edge of the cushion module carrier collection that is closest to the front surface **12**. The support rail carriers **44** are collectively attached along the left, right and a substantial portion of the back sides of the collection of cushion module carriers. It is to be understood that while a collection of cushion module carriers are shown in **FIG. 4**, any number of cushion module carriers may be used. For example, a single, appropriately sized, cushion module carrier may be used.

[**0063**] The bottom surface of cushion module carrier **62** may be formed from a discrete piece of similar fabric. Referring to **FIG. 11**, the bottom of each cushion module is in one embodiment a bottom surface matrix **78**, formed from a single piece of similar fabric as cushion module **62**, which provides a bottom surface for each cushion module carrier **62**. Bottom surface matrix **78**, as shown in **FIG. 11**, can include a stitch pattern **80** that connects each cushion module carrier **62** to bottom surface matrix **78**. Bottom surface matrix **78** also can include a collection of apertures **64**, formed into surface matrix **78**, each of which allows access to a primary internal volume of a cushion module carrier. Each support rail carrier **44** has an aperture **56** formed into its bottom surface to allow a support rail bladder **46** (see **FIG. 6**) to be inserted into it. Support rail carriers **44** are normally attached to bottom surface matrix **78** to substantially form carrier matrix **82**.

[**0064**] Referring to **FIG. 12**, base carrier **94** is attached, in one embodiment by sewing, to the outside edge of carrier matrix **82**. Base carrier **94** is, in one embodiment, formed of similar material as bottom surface matrix **78** and is gathered in each corner to substantially constrict the opening formed at the bottom of base carrier **94**.

[**0065**] **FIG. 10** shows a cushion element **76** of the present invention. Much like the thermal transfer element **74**, the cushion element is a bladder typically constructed of a flexible, substantially moisture-impervious material such as urethane. Unlike the thermal transfer element, the cushion element is filled with a filler material which does not change phase, such as Floam or foam. In one embodiment, the amount of Floam foam in a cushion element varies with its location in the cushion matrix. Cushion elements closer to the support rails may be filled to a higher percentage of volume of the cushion element than cushion elements in the middle of the cushion. By varying the amount of fill of the cushion elements, a desired profile (such as a body matching contour) may be created Thermal transfer element **74** is typically located in the secondary interior volume **72** of cushion module carrier **62**. Thermal transfer element **74** can be assembled into cushion module **60** by fitting it through aperture **64** and aperture **68** so that it is substantially seated in secondary interior volume **72**. Cushion element **76** is typically located in primary interior volume **70** of cushion module carrier **62**. Cushion element **76** can be assembled into cushion module **60** by fitting it through aperture **64** so that it is substantially seated in primary interior volume **70**. Because the thermal transfer and cushion elements can be easily inserted and removed from the cushion element, they may be removed if a user wishes to launder the cushion module **60**.

[**0066**] Alternatively, it may be preferable to locate and secure the thermal transfer element **74** and cushion member **76** within the cushion module. For example, thermal transfer element **74** and cushion element **76** may be attached to the cushion module with an adhesive or a stitch pattern. Further, thermal transfer element **74** and cushion element **76** may be attached to each other. Cushion module carrier **62** may be adapted to provide one or more internal volumes that are moisture impervious into which appropriate filler material may be added to create a thermal transfer and or a cushion element integral to the cushion module carrier. Other alterations or modifications to the cushion module to otherwise accommodate a thermal transfer element and a cushion element may be made without departing from the scope of the invention. The current design also allows for customization of the thermal or cushioning elements by removal or insertion of these elements to create the desired cushioning or temperature moderating effect. For example cushion elements **76** typically have a larger volume of filler material than thermal transfer elements **74**. Thus, as arranged within the cushion as described above, when the user sits on the cushion, the weight of the users body tends to deform the cushion such that the transfer elements **74** are isolated from each other by portions of the cushion elements **76**. This arrangement can be used to moderate the effect of the thermal transfer elements.

[**0067**] FIGS. **13-16** show four additional embodiments of the inventive cushion. In **FIG. 13, a** plurality of cushion elements **76** are located upon cushion base **26**, which in this embodiment includes a substantially homogeneous material, such as Ethafoam™. A plurality of heat transfer elements **74** is located above the cushion elements **76**. In **FIG. 14, a**

single heat transfer element **74** is located above a plurality of cushion elements **76**. In **FIG. 15, a** plurality of heat transfer elements **74** is located above a single cushion element **76**. In **FIG. 16, a** single heat transfer element **74** is located above a single cushion element **76**. While each of these embodiments show a cushion base **26** made of a substantially homogeneous material, it is to be understood that these embodiments depicting alternate heat transfer and cushion elements may be combined with previously described cushion bases.

[**0068**] Embodiments of the present invention can utilize aspects present in a wheelchair cushion known commercially as the Cloud Cushion, which is offered by Otto Bock Healthcare (Minneapolis, Minn.). Details of the Cloud Cushion can be found at www.ottobockus.com and in publications by Otto Bock. Such details are hereby incorporated by reference.

[**0069**] Embodiments of the present invention can utilize Technogel™ material, for example, in place of or in conjunction with Floam™ material. Details regarding Technogel material can be found on the Internet at http://www-.plastics.ottobock.com and from publications provided by Otto Bock. This material includes long polymer threads with only a few links and is strong and highly flexible at the same time.

[**0070**] All patents, patent applications and publications specified in this application are incorporated by reference in their entirety as if completely set out herein. While the present invention has been described with reference to preferred embodiments, workers skilled in the art will recognize that changes may be made in form and detail without departing from the scope of the invention.

What is claimed is:

1. A cushion for a wheelchair having a top surface, the cushion comprising:

a first cushion member; and

a second cushion member having a phase change material and a lubricant, the second cushion being positioned so that it is closer to the top surface of the cushion than the first cushion member.

2. The cushion of claim 1, wherein the second cushion member further comprises an enclosure constructed of a flexible, moisture-resistant material that is formed to create an internal volume sized to accept and surround the phase change material and lubricant.

3. The cushion of claim 1, wherein the first cushion member is comprised of a deformable filler material and an enclosure constructed of a flexible, moisture-resistant material, the enclosure being sized to accept and surround the filler material.

4. The cushion of claim 1 further comprising a cover sized and shaped to enclose the first cushion member and the second cushion member and wherein the cover forms at least a portion of the top surface and a bottom surface of the cushion.

5. The cushion of claim 1, further comprising at least one support rail cushion, wherein the support rail cushion includes a deformable filler material and a support rail cushion enclosure made of a flexible, moisture-resistant material that is sized to accept and surround the filler material.

6. The cushion of claim 5 having a back surface, and wherein the support rail cushion is positioned so that it is closer to at least a portion of the back surface of the cushion than the second cushion member.

7. The cushion of claim 5 having a left side surface, a right side surface and a back surface, wherein the support rail cushion is positioned so that at least a portion of the support rail cushion is closer to the left-side surface, the right side surface and the back surface of the cushion than the second cushion member.

8. The cushion of claim 5, wherein the support rail cushion enclosure is formed to separate portions of the deformable filler material into at least two separate compartments within the support rail cushion enclosure.

9. The cushion of claim 1, further comprising a cushion member carrier shaped to accept and substantially surround the first cushion member and the second cushion member.

10. The cushion of claim 9, wherein the cushion member carrier includes a divider that isolates the first cushion member from the second cushion member.

11. The cushion of claim 9, wherein the cushion member carrier is formed of a flexible material.

12. The cushion of claim 1, further comprising a base member, wherein:

at least a portion of the base member is formed of a polymeric foam; and

the base member is positioned so that at least a portion of the first cushion member and the second cushion member are closer to the top surface of the cushion than the base member.

13. The cushion of claim 12, wherein the base member is located within a flexible and substantially moisture impervious material.

14. The cushion of claim 12, wherein the base member has a left edge, a back edge and a right edge, further comprising a first base member that forms at least a portion of the left, back and right edges of the base member.

15. The cushion of claim 14, further comprising a second base member attached to the first base member on at least a portion of the first base member that forms a portion of the left edge and a portion of the right edge.

16. The cushion of claim 1, wherein the cushion is sized and shaped to fit in the seating area of the wheelchair.

17. A cushion for a wheelchair, the cushion comprising:

a cushion matrix, wherein the cushion matrix includes

at least one first cushion member wherein the at least one first cushion member includes an amount of deformable filler material and an enclosure constructed of a flexible, moisture-resistant material that is formed to create an internal volume to accept and surround the filler material;

at least one second cushion member wherein the at least one second cushion member includes an amount of a filler material including an encapsulated phase change material, and an enclosure constructed of a flexible, moisture-resistant material that is formed to create an internal volume to accept and surround the amount of filler material; and;

at least one support rail cushion; and

a cushion member carrier, formed of a flexible material, shaped to accept and enclose each of the at least one

first cushion member, each of the at least one second cushion member and the support rail cushion; and

a cushion base member.

18. The cushion of claim 17, wherein the cushion matrix includes a plurality of first cushion members.

19. The cushion of claim 18, wherein the cushion has an identical number of first cushion members and second cushion members.

20. The cushion of claim 19, wherein at least one first cushion member has a different amount of filler material from another first cushion member.

21. The cushion of claim 19, wherein the first cushion member has a first major surface and the second cushion member has a second major surface and wherein the cushion member carrier includes a plurality of cushion compartments, each of which is sized and shaped to accept at least one first cushion member and at least one second cushion member, wherein each compartment is constructed to allow at least one first cushion member and at least one second cushion member to be positioned such that the first major surface is adjacent to the second major surface.

22. The cushion of claim 21, wherein the cushion compartments are arranged so that each cushion compartment is adjacent to at least one other cushion compartment.

23. The cushion of claim 21, wherein each cushion compartment includes one first cushion member and one second cushion member.

24. The cushion of claim 23, wherein the cushion has a top surface and the second cushion member is positioned closer to the top surface of the cushion than the first cushion member.

25. The cushion of claim 19, wherein the amount of filler material located within the second cushion member has a volume less than a volume of filler material located within at least one first cushion member.

26. The cushion of claim 17, wherein at least one support rail cushion is positioned so that at least a portion of the support rail cushion is closer to a back surface of the cushion than the at least one first cushion member and the at least one second cushion members.

27. The cushion of claim 17, wherein the phase change material has a melting temperature of greater than 28 degrees Celsius.

28. The cushion of claim 17, wherein the encapsulated phase change material has a re-crystallization point of less than 28 degrees Celsius.

29. The cushion of claim 17, wherein the encapsulated phase change material is comprised of octadecane paraffin.

30. The cushion of claim 17, wherein the encapsulated phase change material is comprised of one of tetradecane, pentadecane, hexadecane, heptadecane, nonadecane, eicosane, heneicosane and docosane.

31. The cushion of claim 17, wherein the cushion member carrier is sized to accept the cushion base member.

32. A cushion having top, bottom, left, right, front and back surfaces for use in a wheelchair, wherein the cushion has a depth defined as a distance from the front surface to the back surface, a width defined as a distance from a left surface to the right surface and a thickness defined as a distance from the top surface to the bottom surface, wherein the cushion is positionable in a seating area of the wheelchair such that the front surface is proximal to a front portion of the seating area and the back surface is proximal to a back portion of the seating area, and wherein the bottom surface the cushion contacts with a top surface of the seating area of the wheelchair and the top surface of the cushion is positioned to accept a user when the user is seated upon the wheelchair, the cushion comprising:

a base, wherein the base has left, right, front, back, top and bottom surfaces that are oriented similarly substantially the same depth and width as the cushion, and the bottom surface of the base is substantially flat, wherein the base includes

a first base member, formed of a polymer, generally rectangular in shape, located near the bottom surface of the base, sized to extend substantially along the width and depth of the cushion, wherein a thickness of the first base member has a constant dimension along a significant portion of the depth of the cushion and has a taper on the top of the lower base member so that a thickness of the lower base member varies along a significant portion of the width of the cushion;

a second base member, located above the first base member, wherein a thickness of the second base member is substantially constant along a significant portion of the depth of the cushion and has a taper along a significant portion of the width of the cushion on the bottom of the upper base member such that the taper of the upper base member interfaces and complements the taper of the lower base member; and

an outer base member, having a generally u-shape with an inside surface which is adjacent to the left, right, and back surfaces of the lower and upper base members and an outside surface which forms the left, right and back surfaces of the base, a bottom surface which forms a part of the bottom surface of the base, and a top surface which has a taper wherein the thickness of the top surface at the inside surface is at least as much as the thickness of the lower and upper surfaces and wherein the thickness of the outer base member increases as to a maximum thickness at the outside surface of outer base member;

a cushion matrix comprising a plurality of individual cushion bladders, wherein each individual cushion bladder includes

a first cushion member, comprised of a filler material;

a second cushion member, located above and adjacent to the first cushion member, wherein the second cushion member is substantially isolated from the first cushion member, and wherein the second cushion member includes a heat transfer structure comprised of an encapsulated phase change material and a fill material;

a support rail comprising a plurality of individual support bladders, wherein each of the individual bladders includes a compartment, comprising filler material, and wherein the individual bladders are attachable and detachable from the base and are arranged to extend along the left, right, and back edges of the cushion so as to substantially surround the cushion matrix along the left, right, and back edges; and

an envelope, which provides the external surfaces of the cushion wherein the base, cushion matrix and support rail are located within a volume of the envelope and are arranged so that the base member is substantially closer to the bottom of the cushion than the cushion matrix and support rail.

33. The cushion of claim 32, wherein the first base member is securely attached to the outer base member to provide a pevlic captivation structure.

34. The cushion of claim 32, wherein the first and second base members are connected to each other through use of an adhesive and enclosed within a pouch.

35. The cushion of claim 32, wherein the support rail is shaped and positioned to include a structure on the back edge of the cushion to provide sacrum relief.

36. The cushion of claim 32, wherein at least one of the individual bladders that comprise the support rail has an exterior surface that is attached to itself along a cross-sectional area of the bladder so as to pinch the bladder and at least partially restrict movement of the filler material within the bladder.

37. The cushion of claim 32, wherein the phase change material is comprised of octadecane paraffin.

38. The cushion of claim 32, wherein the phase change material has a melting point of greater than 28 degrees Celsius.

39. The cushion of claim 32, wherein the phase change material has a re-crystallization point of less than 28 degrees Celsius.

* * * * *