UNITED STATES PATENT AND TRADEMARK OFFICE

BEFORE THE PATENT TRIAL AND APPEAL BOARD

Casper Sleep Inc.,
Petitioner,

v.

Werner Media Partners, LLC,
Patent Owner.

U.S. Patent 10,842,301
IPR 2024-00474

PETITION FOR *INTER PARTES* REVIEW

TABLE OF CONTENTS

I. INTRODUCTION 1

II. THE ’301 PATENT 2

- A. The ’475 Application 4
- B. The ’189 PCT Application 6
- C. The ’251 Reexam 6

III. PERSON OF ORDINARY SKILL IN THE ART 8

IV. CLAIM CONSTRUCTION 9

- A. Bedding 10
- B. Phase Change Material 11
- C. Solid Foam Block 11
- D. Compressed / Compressing / Compressible 13
- E. Resilient 14
- F. Cracking Said Block 15
- G. Summary of Claim Terms 17

V. THE CITED PRIOR ART REFERENCES 19

- A. Lievestro 20
  - 1. Lievestro and Claim 1 24
  - 2. Lievestro and Claim 2 27
- B. Ohta 29
  - 1. Ohta and Claim 1 34
  - 2. Ohta and Claim 2 40
- C. Crawford 45
  - 1. Crawford and Claim 1 49
  - 2. Crawford and Claim 2 55
- D. Schneider 62

VI. PRECISE REASON FOR RELIEF REQUESTED 64
A. Claims 1 and 2 are Obvious Based on Lievestro in view of Schneider 65
1. Claim 1 65
2. Claim 2 66
B. Claims 1 and 2 are Obvious Based on Crawford view of Lievestro...68
1. Claim 1 68
2. Claim 2 69
C. Claims 1 and 2 are Obvious Based on Ohta in view of Schneider 71
1. Claim 1 71
2. Claim 2 72
D. Claims 1 and 2 are Obvious Based on Ohta in View of Crawford 73
1. Claim 1 73
2. Claim 2 75
E. Secondary Considerations of Nonobviousness do not Apply 76
VII. INSTITUTION IS APPROPRIATE UNDER 35 U.S.C. § 325(D) 76
VIII. NOTICES AND STATEMENTS 77
A. Real Party-in-Interest 77
B. Related Matters 77
C. Lead and Backup Counsel 77
D. Service 77
E. Fees 78
F. Grounds for Standing 78
IX. CONCLUSION 78

TABLE OF AUTHORITIES

Cases

Am. Med. Sys., Inc. v. Biolitec, Inc.,
618 F.3d 1354 (Fed. Cir. 2010). 10

Graham v. John Deere Co.,
383 U.S. 1 (1966).....64

In re GPAC,
57 F.3d 1573 (Fed. Cir. 1995) 8

KSR International Co. v. Teleflex Inc.,
550 U.S. 398 (2007).....65

Leapfrog Enters. v. Fisher-Price, Inc.,
485 F.3d 1157 (Fed. Cir. 2007) 76

Newell Cos. v. Kenney Mfg. Co.,
864 F.2d 757 (Fed. Cir. 1988) 76

Pfizer, Inc. v Apotex, Inc.,
480 F.3d 1348 (Fed. Cir. 2007) 64

Phillips v. AWH Corp.,
415 F.3d 1303 (Fed. Cir. 2005) 9

Terlep v. The Brinkman Corp.,
418 F.3d 1379 (Fed. Cir. 2005) 9

Statutes

35 U.S.C. § 103 ..... 2, 65

35 U.S.C. § 311 65

35 U.S.C. § 325(d) 76

Regulations

37 C.F.R. § 42.104(a).....78

37 C.F.R. § 42.104(b) 65

37 C.F.R. § 42.15(a).....78

37 C.F.R. § 42.8(b)(1).....77

37 C.F.R. § 42.8(b)(2).....77

37 C.F.R. § 42.8(b)(3) 77
37 C.F.R. § 42.8(b)(4) 77

TABLE OF EXHIBITS

Exhibit No.	Description
1001	U.S. Patent No. 10,842,301 ("'301 Patent")
1002*	U.S. Patent Application No. 15/719,475 File History ("'475 Application")
1003	U.S. Provisional Patent Application No. 62/367,840 File History ("'840 Application")
1004*	PCT Application PCT/US2017/54189 File History from WIPO ("'189 PCT Application")
1005*	U.S. Reexamination Request Control No. 90/015,251 File History ("'251 Reexam")
1006	Declaration of David M. Brienza, Ph.D. ("Brienza Decl.")
1007	Curriculum Vitae of David M. Brienza, Ph.D.
1008	JP 4817757 B2 to Ohta et al. ("Ohta")
1009	Certified English Translation of Ohta
1010	WO 2016/090258 A1 to Schneider ("Schneider")
1011	U.S. Publication No. 2014/0141233 A1 to Crawford et al. ("Crawford")
1012	NL 1020305C2 to Lievestro ("Lievestro")
1013	Certified English Translation of Lievestro
1014	*Websters New World College Dictionary*, 4th Edition, 2001
1015	U.S. Patent No. 5,388,296 to Mansour ("Mansour")

Exhibit No.	Description
1016	U.S. Publication No. 2015/0272354 A1 to Asklof et al. ("Asklof")
1017	U.S. Publication No. 2012/0227185 A1 to Batiste et al. ("Batiste")
1018	U.S. Publication No. 2003/0109908 A1 to Lachenbruch et al. ("Lachenbruch")
1019	U.S. Publication No. 2004/0123391 to Call et al. ("Call")
1020	U.S. Patent No. 5,033,136 to Elkins ("Elkins")
1021	U.S. Publication No. 2002/0132091 A1 to Worley ("Worley")
1022	U.S. Publication No. 2016/0166074 A1 to Rose et al. ("Rose")
1023	U.S. Publication No. 2012/0193572 A1 to MacKay ("MacKay")
1024	U.S. Publication No. 2015/0296994 A1 to Mikkelsen et al. ("Mikkelsen")
1025	U.S. Publication No. 2008/0289073 A1 to Jones ("Jones")

* Pinpoint citations to these Exhibits in this IPR Petition are to pagination that has been added for convenience. This pagination does not appear in the original documents.

Casper Sleep Inc. ("Petitioner") respectfully bring this Petition for *Inter Partes* Review ("IPR Petition") requesting the Patent Trial and Appeal Board ("Board") cancel claims 1 and 2 of U.S. Patent No. 10,842,301 ("'301 Patent") purportedly owned by Werner Media Partners, LLC ("Patent Owner").

I. INTRODUCTION

The '301 Patent should not have issued. The '301 Patent is generally directed toward old technology— bedding made from resilient foam material that has holes and is coated with a phase change material ("PCM"). The four prior art references presented in this IPR Petition disclose this technology and have never before been considered by the U.S. Patent and Trademark Office ("USPTO")— whether in U.S. Patent Application Serial No. 15/719,475 (the "'475 Application") from which the '301 Patent issued, in the corresponding PCT Application PCT/US2017/54189 ("'189 PCT Application") filed by Patent Owner, or in U.S. Reexamination Request Control No. 90/015,251 ("'251 Reexam") filed by a third party. The evidence in this IPR Petition regarding these newly-cited references— including the accompanying Declaration of David M. Brienza, Ph.D. ("Brienza

Decl.") (Exhibit 1006)—demonstrates on four separate grounds that each of the two claims of the '301 Patent is obvious under 35 U.S.C. § 103.[1]

II. THE '301 PATENT

The '301 Patent is entitled "Cooling Pillow" and names Marc L. Werner as its sole inventor. (Exhibit 1001). The '301 Patent issued on November 24, 2020, from the '475 Application, filed on September 28, 2017, and claims benefit to U.S. Provisional Patent Application No. 62/367,840 ("'840 Application") (Exhibit 1003), filed on July 28, 2016.

The '301 Patent is directed to a pillow made from resilient foam material having holes and coated with a phase change material ("PCM"). PCM is a substance with a high heat of fusion which, melting and solidifying at a certain temperature, is capable of storing and releasing large amounts of energy. (Exhibit 1006, Brienza Decl., ¶ 44).

The '301 Patent describes a user compressing the cooling pillow with the weight of his or her head. As the pillow compresses, air is displaced and is cooled by PCM in the cooling layer. This result in a gust of cooled air against the user's head and neck. (Exhibit 1001, Abstract).

[1] All citations to statutes in this IPR Petition are to their AIA versions.

The ’301 Patent further describes how airflow, heat regulation, and compliance contribute to the provision of comfort. The process of cracking the foam block is described as a method to increase the compliance of the foam. The process of adding holes is also described as contributing to compliance of the pillow and as a strategy for providing airflow to the user’s skin. Application of a PCM is said to help control heat. Durability is also discussed related to the use of covers. (Exhibit 1001, col. 2, l. 54–col. 7, l. 21).

Figure 9 of the ’301 Patent shows the cooling pillow (100):

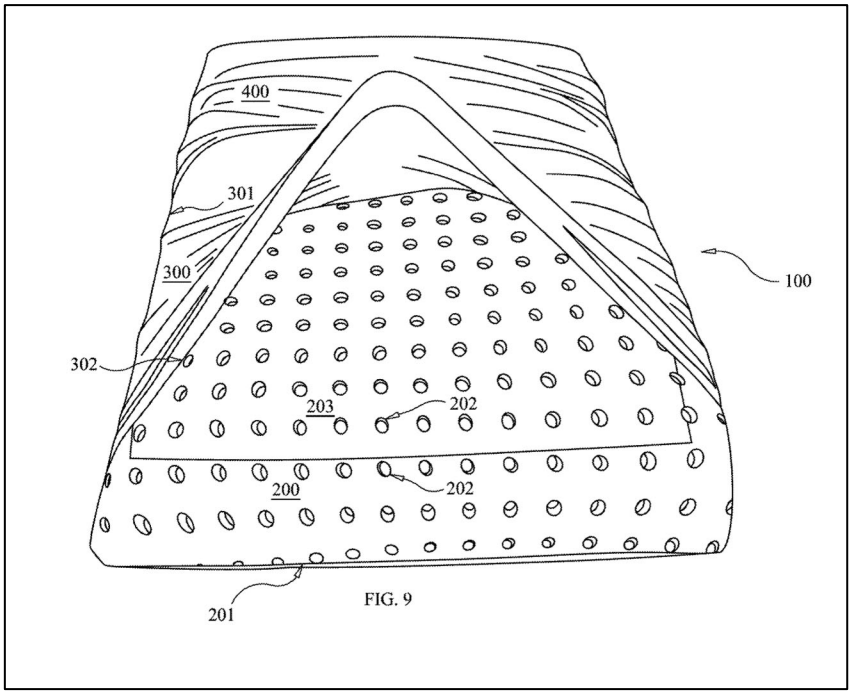

’301 Patent Fig. 9

The ’301 Patent also describes a preferred processes for forming a block of foam in a mold, cracking the foam block with pressure, forming holes in the block, and applying a PCM to the foam block. (Exhibit 1001, col. 11, ll. 13–50).

A. The ’475 Application

The ’475 Application as filed initially included 15 claims related to a perforated pillow (pillow with holes) used as bedding having PCM that helps to cool the user and improve comfort. (Exhibit 1002, pp. 28–29).

Only original claims 11 and 12 were ultimately allowed after they were rewritten into independent form to become claims 1 and 2 of the ’301 Patent. All other claims were canceled by Patent Owner in light of the Examiner’s arguments for rejection as being anticipated or obvious in view of the following six references: (1) U.S. Patent No. 5,388,296 to Mansour (“Mansour”) (Exhibit 1015); (2) U.S. Publication No. 2015/0272354 A1 to Asklof et al. (“Asklof”) (Exhibit 1016); (3) U.S. Publication No. 2012/0227185 A1 to Batiste et al. (“Batiste”) (Exhibit 1017); (4) U.S. Publication No. 2003/0109908 A1 to Lachenbruch et al. (“Lachenbruch”) (Exhibit 1018); (5) U.S. Publication No. 2004/0123391 A1 to Call et al. (“Call”) (Exhibit 1019); and (6) U.S. Patent No. 5,033,136 to Elkins (“Elkins”) (Exhibit 1020) (Exhibit 1002, pp. 59–67, 82–96, 98–107, 118–126, 129–143, 147–159).

During prosecution, Patent Owner provided the following reasons for having holes in the pillow:

> To increase the [cooling] effect, the volume of air being displaced is increased and the speed at which that air is displaced is increased. Placing perforations [holes] in the foam [block] was found to increase

> the volume and speed of the air being displaced when the foam [block] is compressed.

(Exhibit 1002, 5/15/2018 Amendment, p. 87). This statement indicates that Patent Owner was aware of the commonly known cooling effect of having holes in a pillow or other support surface. (Exhibit 1006, Brienza Decl., ¶ 36).

The ’301 Patent issued with the following two claims, with bracketed letters added for clarity:

> 1. A process for manufacturing bedding, which comprises:
> [a] providing a solid, resilient, compressible foam block, said block having a surface;
> [b] applying phase change material to said surface;
> [c] forming a hole into said block and through said surface; and
> [d] cracking said block.
>
> 2. A process for manufacturing bedding, which comprises:
> [a] providing a solid, resilient, compressible foam block, said block having a surface;
> [b] applying phase change material to said surface;
> [c] forming a hole into said block and through said surface;
> [d] compressing said block by pressing on said surface before the forming of the hole; and
> [e] performing the forming of the hole while said block is compressed.

(Exhibit 1001, col. 12, ll. 36–51).

B. The ’189 PCT Application

On the same day that Patent Owner filed the ’475 Application, Patent Owner also filed the ’189 PCT Application with USPTO acting as a Receiving Office under the Patent Cooperation Treaty (“PCT”). On December 26, 2017, USPTO—acting as the International Search Authority under PCT—issued an International Search Report and Written Opinion for the ’189 PCT Application listing the following six prior-art references: (1) U.S. Publication No. 2002/0132091 A1 to Worley (“Worley”) (Exhibit 1021); (2) U.S. Publication No. 2016/0166074 A1 to Rose et al. (“Rose”) (Exhibit 1022); (3) U.S. Publication No. 2012/0193572 A1 to MacKay (“MacKay”) (Exhibit 1023); (4) U.S. Publication No. 2015/0296994 A1 to Mikkelsen et al. (“Mikkelsen”) (Exhibit 1024); (5) Lachenbruch; and (6) U.S. Publication No. 2008/0289073 A1 to Jones (“Jones”) (Exhibit 1025) (Exhibit 1004, pp. 132–134).

Patent Owner did not cite these references in the ’475 Application.

C. The ’251 Reexam

On June 12, 2023, a third party filed the ’251 Reexam requesting reexamination of claims 1 and 2 of the ’301 Patent. The request argued that the claims should be interpreted as product-by-process claims and cited the following four prior art references: (1) U.S. Patent No. 10,293,526 B2 to Corodemus et al. (“Corodemus”) (Exhibit 1005, pp. 49–67); (2) U.S. Publication No. 2008/0233368

A1 to Hartmann et al. ("Hartmann") (Exhibit 1005, pp. 68–87); (3) U.S. Publication No. 2011/0061167 A1 to Farley ("Farley") (Exhibit 1005, pp. 88–93); and (4) certain non-patent literature related to a HyperChill pillow ("HyperChill NPL") (Exhibit 1005, pp. 17–30) (Exhibit 1005, pp. 1–104).

On July 7, 2023, Examiner Sarah S. Clarke denied the reexamination request. (Exhibit 1005, 130–142). Notwithstanding this denial, Examiner Clarke made three determinations relevant to this IPR Petition.

First, based on the prosecution history of the '301 Patent, Examiner Clarke noted that: (1) claim 1 of the '301 Patent was allowed due to the method step "cracking said block"; and (2) claim 2 of the '301 Patent was allowed due to the method steps of "compressing said block by pressing on said surface before the forming of hole; and performing the forming of the hole while said block is compressed." (Exhibit 1005, pp. 133–134).

Second, Examiner Clarke rejected the notion that claims 1 and 2 of the '301 Patent are product-by-process claims, stating that the claims are "drawn to processes, and not products." (Exhibit 1005, p. 134–135).

Third, Examiner Clarke determined that because neither claim 1 nor claim 2 of the '301 Patent had support in the '840 Application, the claims are entitled to

the filing date of the nonprovisional application only, i.e., September 28, 2017. (Exhibit 1005, p. 134).[2]

III. PERSON OF ORDINARY SKILL IN THE ART

Determining the level of a person of ordinary skill in the art at the priority date of the invention ("POSITA") requires considering the type of problems encountered in the art. prior art solutions to those problems, rapidity with which innovations are made, sophistication of the technology, and educational level of active workers in the field. *In re GPAC*, 57 F.3d 1573, 1579 (Fed. Cir. 1995). Not all such factors may be present in every case, and one or more of these or other factors may predominate in a particular case. *Id*.

Applying these factors, a POSITA from the timeframe of the invention of the '301 Patent (or around the mid-2016 to fall-2017 period) in the field of foam support surface and cushioning technology would have at least a bachelor's degree in engineering and several years of experience designing foam support surfaces,

[2] Petitioner believes that Examiner Clarke's determination regarding the '840 Application is correct. But even if it is not, all four of the prior art references discussed in this IPR Petition have a priority date before July 28, 2016, the filing date of the '840 Application.

cushioning products, or an equivalent level of education and experience. A POSITA would have knowledge of the factors pertaining to the interaction between the human body and cushioning products used for bedding or similar applications. A POSITA would be familiar with the materials used in the production of cushioning products used for bedding. A POSITA would be familiar with manufacturing processes used for producing cushioning products used for bedding or similar applications. (Exhibit 1006, Brienza Decl., ¶¶ 23–25). Finally, a POSITA would understand that the processes in the ’301 Patent directed to pillows may be used to fabricate other foam bedding products such as mattresses. (Exhibit 1006, Brienza Decl., ¶ 28).

IV. CLAIM CONSTRUCTION

Interpreting patent claims entails review of the intrinsic evidence, which consists of the claim language, written description, and the prosecution history. *Terlep v. The Brinkman Corp.*, 418 F.3d 1379, 1382 (Fed. Cir. 2005). The words of a claim are generally given their ordinary and customary meaning to a POSITA after reading the entire patent, including the specification and prosecution history. *Phillips v. AWH Corp.*, 415 F.3d 1303, 1313–1314 (Fed. Cir. 2005) (en banc).

A. Bedding

"Bedding": The term "bedding" is used in the preamble ("A process of manufacturing bedding") of claims 1 and 2 of the '301 Patent. A claim preamble does not limit the claim scope unless it recites essential structure or steps, or if it is necessary to give life, meaning, and vitality to the claim. *Am. Med. Sys., Inc. v. Biolitec, Inc.*, 618 F.3d 1354, 1358–59 (Fed. Cir. 2010).

The preamble does not recite essential structure or steps of either claim, does not use any terms from either claim, and is not necessary to give life, meaning, and vitality of either claim. Accordingly, the preamble does not limit the scope of either claim. Nevertheless, a POSITA would have understood the term "bedding" to mean "an item used for sleeping or resting." (Exhibit 1006, Brienza Decl., ¶ 42).

This interpretation is also consistent with the intrinsic record. For example, the '301 Patent specification states that "[T]he invention relates to bedding, and in particular to pillows with cooling features." (Exhibit 1001, col. 1, ll. 30–31). "Having suitable bedding is critical in controlling temperature, which ultimately, when adequate, can enhance the quality of sleep that one receives." (Exhibit 1001, col. 1, ll. 43–45). "As shown by the review of the prior art, a need exists to provide supportive bedding that improves a sleeper's temperature regulation, particularly when first falling asleep." (Exhibit 1001, col. 2, ll. 50–52) (Exhibit 1006, Brienza Decl., ¶ 42).

As discussed further below, except for the claim term "phase change material" (claims 1 and 2), all the other terms should be construed in accordance with their plain and ordinary meanings.

B. Phase Change Material

"Phase change material": The '301 Patent specification itself defines this claim term. "A phase-change material (PCM) is a substance with a high heat of fusion which, melting and solidifying at a certain temperature, is capable of storing and releasing large amounts of energy." (Exhibit 1001, col. 2, ll. 11–14). Accordingly, based on the intrinsic record, the term "***phase change material***" means ***"a substance with a high heat of fusion which, melting and solidifying at a certain temperature, is capable of storing and releasing large amounts of energy***." (Exhibit 1006, Brienza Decl., ¶ 44).

C. Solid Foam Block

"Solid…foam block": The plain and ordinary meaning of the word "solid" is "**tending to keep its form rather than to flow or spread out like a liquid or gas**." (Exhibit 1014, p. 1364).

This meaning is consistent with the use of the word in the specification of the '301 Patent, which explains that a solid foam block results from molding and curing liquid foam:

> **A block of solid, resilient, compressible foam is made by mixing the materials for the foam, spraying the mixture with a gas to**

> **form a liquid foam, filling a mold with the liquid foam, and curing the liquid foam to form a solid foam.** In the case of a polyurethane foam, a liquid polyol component is mixed with a liquid isocyanate component. The components are selected based on the desired physical properties of the foam. Modifiers can be further added to help achieve the desired physical properties and to aid in processing. Next, the mixture is sprayed from a nozzle into a mold. Carbon dioxide is sprayed from a second nozzle into the steam of sprayed mixture to produce a liquid foam. The mold has a cavity shaped like the shape of a pillow when closed. After filling the mold with the liquid foam, the mold is closed and the liquid foam is heated to 51.7° C. and cured for ten to twelve minutes. After curing, the mold is opened and a cast is removed. The cast is a block of solid, resilient, compressible foam, which can be further processed.

(Exhibit 1001, col. 3, ll. 15–33 [emphasis added]).

In describing the preferred embodiment, the ’301 Patent specification explains:

> A conventional mixture of materials for forming a solid, resilient, compressible polyurethane foam is prepared. Before pouring the mixture into the mold, a mold releasing agent is sprayed on the surface of the mold. Next, the mixture is poured into a mold. The mold has the shape of the desired pillow. A preferred size pillow is 41 cm by 61 cm by 14 cm. Next, the mold is heated to 51.7° C. The temperature of the mold is held at 51.7° C. for at least ten minutes and no more than twelve minutes. After the time expires, a block of solid,

> resilient, compressible polyurethane that is shaped like the mold is removed from the mold.

(Exhibit 1001, col. 11, ll. 14–25).

Accordingly, as applied to the claim term "solid…foam block," a POSITA would have understood it to mean a "***piece of foam that tends to keep its form***." (Exhibit 1006, Brienza Decl., ¶ 45).

D. Compressed / Compressing / Compressible

"Compressed" (claim 2) / **"Compressing"** (claim 2) / **"Compressible"** (claims 1 and 2): The plain and ordinary meaning of the word "compressed" is "**pressed together, made more compact by pressure.**" (Exhibit 1014, p. 300). Therefore, plain and ordinary meaning of the word "compressing" is "**making more compact by or as by pressure.**" Finally, the plain and ordinary meaning of the word "compressible," an adjective form of "compress," is "**able to be pressed together, made more compact by pressure.**"

The '301 Patent specification uses these terms according to their plain and ordinary meanings. For example, the '301 Patent specification states: "A further object of the present invention is to provide a pillow that creates a flow of air when the pillow is compressing. 'Compressing' in this context means while being reduced in volume, as contrasted to 'compressed', which means staying at a constant, compressed volume." (Exhibit 1001, col. 2, ll. 60–64).

Accordingly, based on the plain and ordinary meaning of the claim terms, which is consistent with the intrinsic record overall, the term "compressing" means "***making more compact by pressure,***" the term "compressed" means "***pressed together, made more compact by pressure,***" and the term "compressible" is an adjective form of compressed, *i.e.,* "***able to be pressed together, made more compact by pressure***." (Exhibit 1006, Brienza Decl., ¶ 46).

E. Resilient

"Resilient" in the claim term "resilient…foam block" (claims 1 and 2): The plain and ordinary meaning of the word "resilient" is "**bouncing or springing back into shape, position, etc. after being stretched, bent, or esp. compressed.**" (Exhibit 1014, p. 1220).

This meaning is consistent with the use of the word in the specification of the '301 Patent, which describes resilience of a solid foam block as the ability of the block to return (spring back) to its uncompressed shape:

> Response time can be a measure of the time for pillow to be depressed under a weight of a typical head or the time for the pillow to recover when the weight is removed.
> * * *
> At the same time, good performing bedding is known to compress to a height that places the sleepers skeleton inline under the weight of the body, while retaining a recovery time between four and eight seconds (4-8 s). Recovery time is the time required for the solid, resilient,

> compressible foam block to return to an uncompressed state after normal use.

(Exhibit 1001, col. 3, ll. 12–14, col. 4, ll. 33–39).

Accordingly, as applied to the claim term "resilient … foam block," a POSITA would have understood it to mean a "***foam block that springs back to its uncompressed shape after being compressed.***" (Exhibit 1006, Brienza Decl., ¶ 47).

F. Cracking Said Block

"Cracking said block": The plain and ordinary meaning of the verb "to crack" is "**to break or split, usually without complete separation of parts.**" (Exhibit 1014, p. 337).

The '301 Patent specification's use of "cracking" is consistent with this plain and ordinary meaning. For example, the '301 Patent specification uses the term "crack" or "cracking" in several places, some concerning the solid foam block and another concerning a layer of PCM on top of the block. In all of these, the term "crack" or "cracking" is used in the context of splitting or breaking something without a complete separation of parts. For example, when using the term in reference to a PCM layer, the '301 Patent specification states:

> The microcapsules, which start in powder form, are mixed with polyurethane foam to create a durable PCM mixture. The durable PCM mixture is applied to the surface of the solid, resilient,

> compressible foam block and allowed to cure. The resulting PCM layer is suitably adhered to the foam block and is **flexible enough not to crack during use.**"

(Exhibit 1001, col. 5, ll. 17–23 [emphasis added]).

At the same time, when using the term in the context of a foam block, the '301 Patent specification does so in reference to closed cells that make up the foam block:

> Cracking a foam block has been found to enhance the comfort and feel in bedding. Cracking is a term for processing a foam block with a roller press. A block of solid, resilient, compressible foam is passed through a roller press twice.… The roller press **opens some of the closed cells that make up the foam block.** A foam block that has been cracked has a compressibility and resilience that allows the resulting pillow to be usable by back, side, and stomach sleepers.
>
> * * *
>
> The foam block is 'cracked' twice to improve the feel of the pillow. To crack the pillow, the pillow is run between a set of rollers.

(Exhibit 1001, col. 3, ll. 39–50, col. 11, ll. 26–28 [emphasis added]).

These passages make clear that cracking a foam block refers to opening or breaking some of the closed cells in the foam block, such as by compression, without separating (breaking apart) the block itself. A POSITA would have understood the term "cracking said [foam] block" in claim 1 of the '301 Patent to

mean "***opening (breaking) some of the foam block's closed cells, such as by compression, without complete separation of the foam block,***" which would also be consistent with use of plain and ordinary meaning of the verb "to crack." (Exhibit 1006, Brienza Decl., ¶ 48).

G. Summary of Claim Terms

The following table summarizes the terms and phrases and the proper interpretation of their meaning.

Term or phrase in '301 Patent claims	**Claim(s) in '301 Patent**	**Meaning understood by POSITA**
"A method of manufacturing bedding"	1, 2	This preamble is not believed to limit claim scope. Nevertheless, the word "*bedding*" may be interpreted as an "***item used for sleeping or resting***"
"solid, … foam block"	1, 2	***piece of foam that tends to keep its form***
"compressible … foam block"	1, 2	***foam block that is able to be pressed together, made more compact by pressure***
"resilient … foam block"	1, 2	***foam block that springs back (returns) to its uncompressed shape after being compressed***

"phase change material"	1, 2	***a substance with a high heat of fusion which, melting and solidifying at a certain temperature, is capable of storing and releasing large amounts of energy***
"applying phase change material"	1, 2	***applying a substance with a high heat of fusion which, melting and solidifying at a certain temperature, is capable of storing and releasing large amounts of energy***
"forming a hole into said block and through said surface"	1, 2	***forming a hole into the solid, resilient, compressible foam block and through the block's surface***
"cracking said block"	1	***opening (breaking) some of the foam block's closed cells, such as by compression, without complete separation of the foam block***
"compressing said block by pressing on said surface before the forming of the hole"	2	***making the foam block more compact by pressing the block's surface before the forming of the hole***
"performing the forming of the hole while said block is compressed"	2	***performing the forming of the hole while the block is made more compact by pressure on the block's surface***

(Exhibit 1006, Brienza Decl., ¶ 49).

V. THE CITED PRIOR ART REFERENCES

This IPR Petition presents the following four prior art references that have not previously been considered by USPTO, whether in the ’475 Application, in the ’189 PCT Application, or in the ’251 Reexam:

1. NL 1020305C2 to **Lievestro** (“Lievestro”) is entitled “Device and method for making holes in deformable foam blocks,” and issued on December 12, 2003. (Exhibit 1012, and its certified translation, Exhibit 1013). Lievestro is a prior art reference to the ’301 Patent under 35 U.S.C. § 102(a)(1).

2. JP 4817757 B2 to **Ohta** et al. (“Ohta”) is entitled “Method for the Production of Perforated Pillows,” and issued on November 16, 2011. (Exhibit 1008, and its certified translation, Exhibit 1009). Ohta is a prior art reference to the ’301 Patent under 35 U.S.C. § 102(a)(1).

3. U.S. Publication No. 2014/0141233 A1 to **Crawford** et al. (“Crawford”) is entitled “Surface Infusion of Flexible Cellular Foams With Novel Liquid Gel Mixture,” and was published on May 22, 2014. (Exhibit 1011). Crawford is a prior art reference to the ’301 Patent under 35 U.S.C. § 102(a)(1) and (a)(2).

4. WO 2016/090258 A1 to **Schneider** (“Schneider”) is entitled “Washable Mattress Assembly,” and was published on June 9, 2016. (Exhibit

1010). Schneider is a prior art reference to the ’301 Patent under 35 U.S.C. § 102(a)(1) and (a)(2).

A. Lievestro

Lievestro describes a device and method for punching holes in solid, deformable foam blocks, including mattresses. (Exhibit 1013, Abstract). Specifically, Lievestro’s device “is equipped with a rotatable punch-roll body (3) designed to compress the blocks (1) and thereby punch holes (2) in the blocks (1).” (Exhibit 1013, Abstract) (Exhibit 1006, Brienza Decl., ¶ 52).

The motivation for Lievestro’s invention was to have an efficient process for creating holes in foam blocks. “The present invention aims to overcome the drawbacks of the known device and method. Specifically, the invention aims to provide a device and method for creating holes in foam blocks….” (Exhibit 1013, p. 2) (Exhibit 1006, Brienza Decl., ¶ 53).

Lievestro notes that the roller-press hole-punching device and process not only has the advantage of being efficient in making holes, but also enhances the comfort of the resulting foam mattress by crushing the foam block to break cell walls within the foam of the foam blocks. “An additional advantage is that the device can also crush the foam blocks during the compression and punching process. This crushing breaks cell walls within the foam of the foam blocks, resulting in a relatively open cell structure that enhances the comfort of the blocks

during use." (Exhibit 1013, p. 2). In other words, Lievestro discloses "cracking the foam block." (Exhibit 1006, Brienza Decl., ¶ 54).

Referring to Figs. 3, 4, and 7 in Lievestro, reproduced below, the device is configured to pass the solid (foam block that tends to keep its form), deformable foam block 1 between two rollers, a "die-roll body 3" and opposing "counter punching body 6." As shown in the figures, a solid foam block 1 first starts getting compressed (made more compact) by pressure of the die-roll body (punch-roller) 3 alone. Then, once it becomes fully compressed between the die-roller 3 and a counter-punching roller 6, a cutting edge 7 of a punching sleeve 5 of the punch-roller 3 punches a hole in the foam block and through the foam block's surface. (Exhibit 1013, pp. 5–6) (Exhibit 1006, Brienza Decl., ¶ 55).

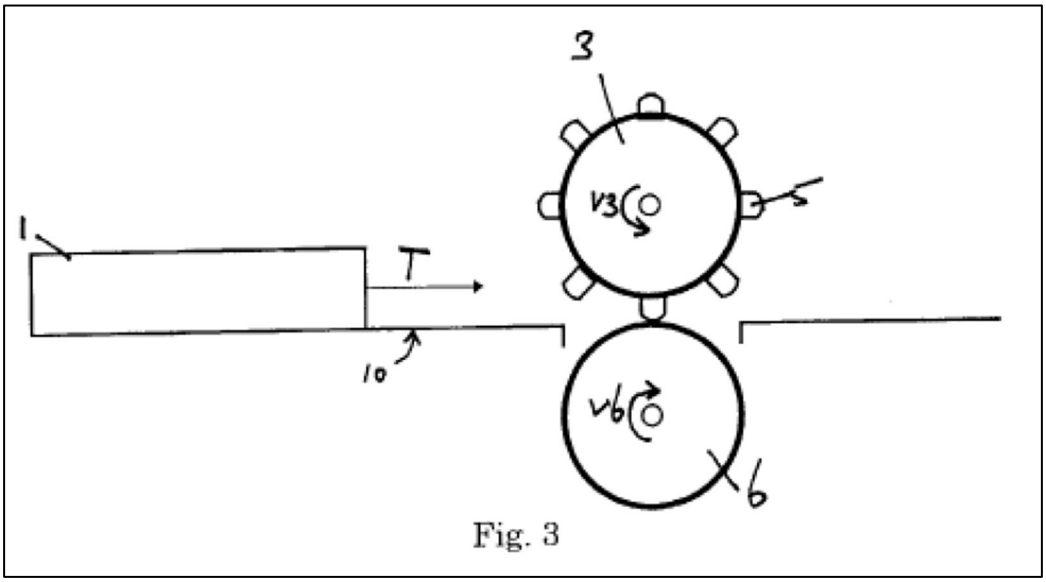

Lievestro Fig. 3

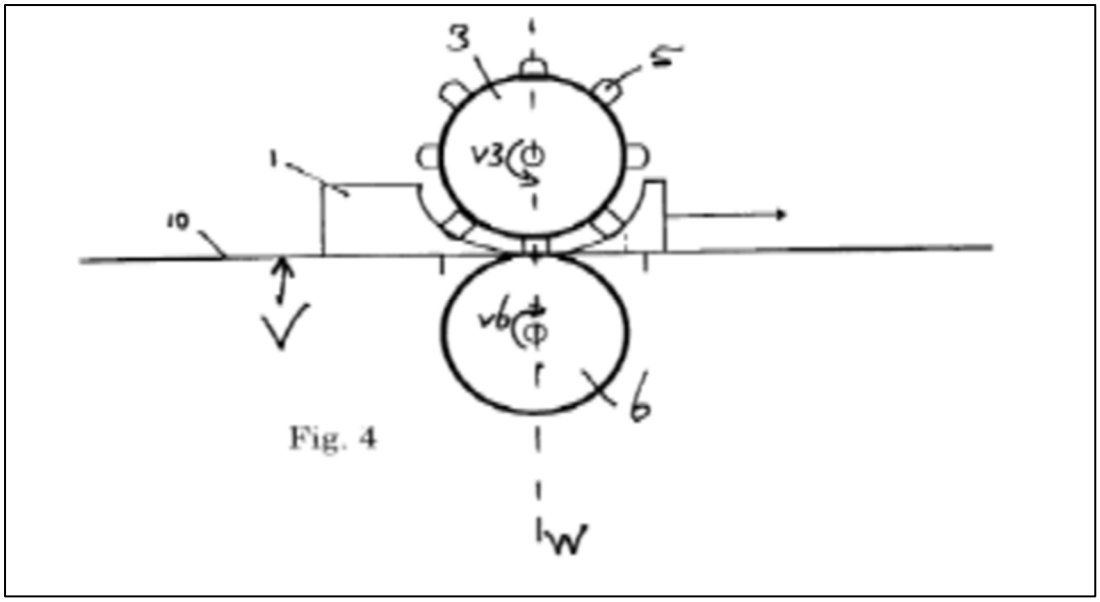

Fig. 4

Lievestro Fig. 4

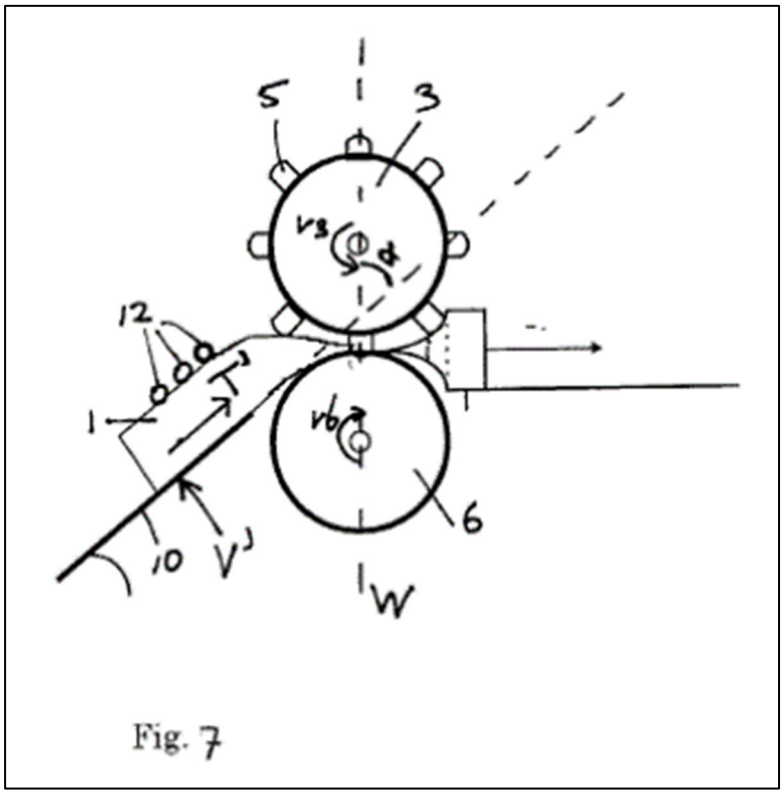

Fig. 7

Lievestro Fig. 7

As shown in Lievestro Figs. 3, 4, and 7, as the foam block 1 approaches the rollers (from left to right in the figures), the block first starts getting compressed by the die-roll body (punch-roller) 3 alone (by having the punching sleeve 5 of the die-roll body 3 pressing on the surface of the block). Then, once the block moves to the right, into a position where it is fully compressed between the die-roller 3 and a counter-punching roller 6 (this is shown at the 6 o'clock position in Lievestro Figs. 4 and 7), a cutting edge 7 of a punching sleeve 5 of the punch-roller 3 punches a hole in the foam block and through the foam block's surface. (Exhibit 1013, pp. 5–6). Once the hole has been punched, the block moves further to the right, at which point it starts decompressing to its original shape (springing back to its uncompressed shape) (Exhibit 1006, Brienza Decl., ¶ 56).

Figs. 5 and 6 of Lievestro, reproduced below, show the side and top views, respectively, of the resulting foam block with holes. (Exhibit 1013, p. 5). Because Lievestro discloses the solid, compressible foam block returning to its uncompressed shape, Lievestro's solid foam block is compressible and resilient. (Exhibit 1006, Brienza Decl., ¶ 57).

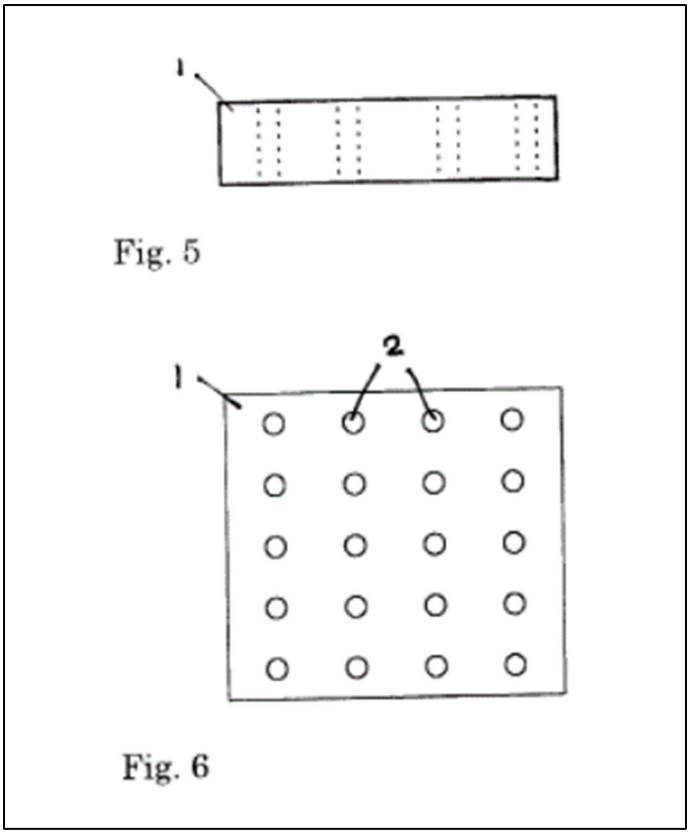

Lievestro Figs 5 and 6

1. Lievestro and Claim 1

Regarding claim 1 of the ’301 Patent, Lievestro discloses all the steps of the claimed method, except for the step of “applying phase change material to said surface.” This is shown in the chart below:

U.S. Patent No. 10,842,301	**Lievestro (Exhibit 1013)**
1. A process for manufacturing bedding, which comprises:	*The preamble is not believed to be limiting. Nevertheless, Lievestro discloses a process for manufacturing bedding:* “Device and method for making holes in deformable foam blocks” (Title).

[a] providing a solid, resilient, compressible foam block, said block having a surface;	*Lievestro discloses this claim limitation.* "Figure 3 illustrates a first step for creating holes 2 in a block 1." (p. 6). Figure 3 shows the foam block 1 (a piece of foam that tends to keep its form) as having a surface. 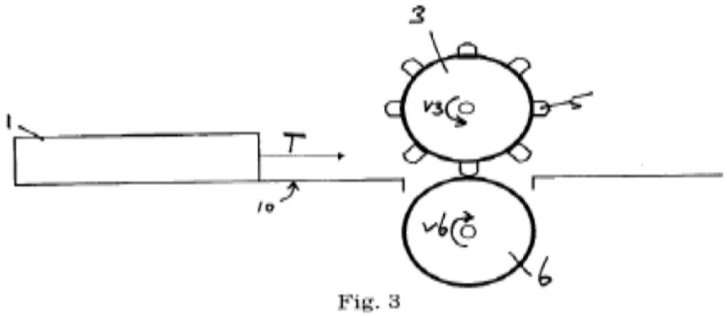 Fig. 3 Lievestro Fig. 3 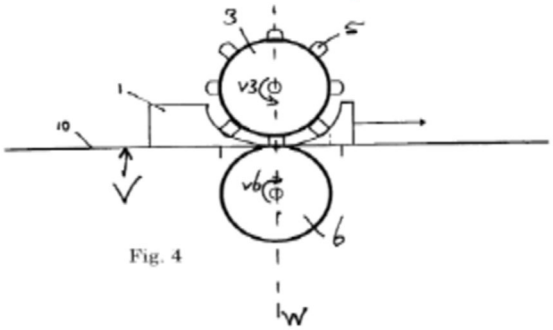 Fig. 4 Lievestro Fig. 4 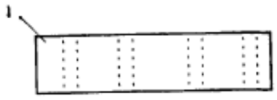 Fig. 5 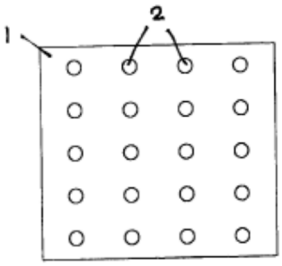 Fig. 6 Lievestro Figs. 5 and 6

	"Figure 4 shows a second step of the process, where the block 1 is passed between the roll bodies 3, 6 and compressed by them. During this process, the holes 2 are punched in the block 1 through the cooperation of the punching sleeves 5 of the die-roll body 3 with an outer circumference of the counter-punching body 6. Preferably, the angular velocities v3, v6 of the roll bodies are chosen in such a way that the punched holes 2 extend in a desired direction in the block 1. Figures 5 and 6 show a possible result of this method, where the holes 2 are primarily punched perpendicular to the block 1." (p. 6). Figures 4 and 7 also show the foam block decompressing to its relaxed state (returning to its uncompressed shape) once the pressure is removed. Thus, Lievestro's solid foam block 1 is compressible and resilient.
[b] applying phase change material to said surface;	*Lievestro is missing this limitation.*
[c] forming a hole into said block and through said surface; and	*Lievestro discloses this claim limitation.* See step 1[a], above.
[d] cracking said block.	*Lievestro discloses this claim limitation.* "An additional advantage is that the device can also crush the foam blocks during the compression and punching process. This crushing breaks cell walls within the foam of the foam blocks, resulting in a relatively open cell structure that enhances the comfort of the blocks during use." (p. 3).

(Exhibit 1006, Brienza Decl., ¶ 58).

2. Lievestro and Claim 2

Regarding claim 2, Lievestro also discloses all the steps of the claimed method, except for the step of "applying phase change material to said surface." This is shown in the chart below:

U.S. Patent No. 10,842,301	**Lievestro (Exhibit 1013)**
2. A process for manufacturing bedding, which comprises:	*The preamble is not believed to be limiting. Nevertheless, Lievestro discloses a process for manufacturing bedding:* "Device and method for making holes in deformable foam blocks" (Title)
[a] providing a solid, resilient, compressible foam block, said block having a surface;	*Lievestro discloses this claim limitation.* "Figure 3 illustrates a first step for creating holes 2 in a block 1." (p. 6). Figure 5 shows the foam block 1 (a piece of foam that tends to keep its form) as having a surface. 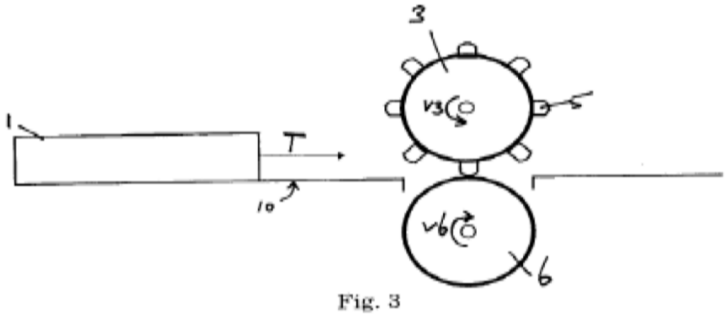 Lievestro Fig. 3

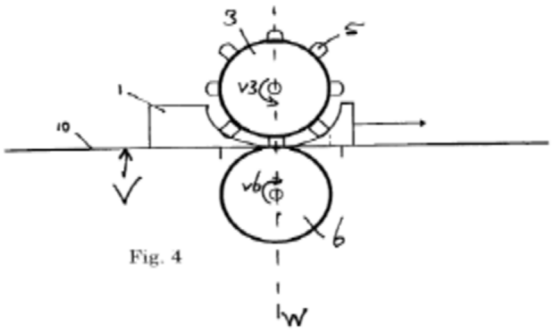

Lievestro Fig. 4

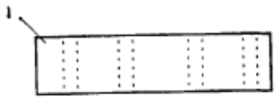

Fig. 5

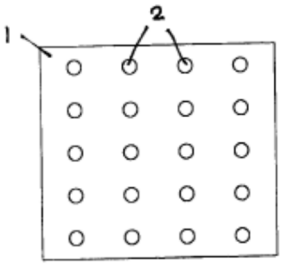

Fig. 6

Lievestro Figs. 5 and 6

"Figure 4 shows a second step of the process, where the block 1 is passed between the roll bodies 3, 6 and compressed by them. During this process, the holes 2 are punched in the block 1 through the cooperation of the punching sleeves 5 of the die-roll body 3 with an outer circumference of the counter-punching body 6. Preferably, the angular velocities v3, v6 of the roll bodies are chosen in such a way that the punched holes 2 extend in a desired direction in the block 1. Figures 5 and 6 show a possible result of this method, where the holes 2 are primarily punched perpendicular to the block 1." (p. 6).

Figures 4 and 7 also show the foam block decompressing to its relaxed state (returning to its

	uncompressed shape) once the pressure is removed. Thus, Lievestro's solid foam block 1 is compressible and resilient.
[b] applying phase change material to said surface;	*Lievestro is missing this limitation*
[c] forming a hole into said block and through said surface;	*Lievestro discloses this claim limitation.* See step 2[a] above.
[d] compressing said block by pressing on said surface before the forming of the hole; and	*Lievestro discloses this claim limitation.* See Fig. 4 in step [a] above, which discloses the foam block first getting compressed (being reduced in volume) by the die-roll body (punch-roller) 3 alone. Then, once the block moves into a fully compressed state (reduced in volume) between the die-roller 3 and a counter-punching roller 6 (this is shown at the 6 o'clock position in Figures 3 and 7), and while it is in the compressed state, a cutting edge 7 of a punching sleeve 5 of the punch-roller 3 punches a hole in the foam block and through the foam block's surface.
[e] performing the forming of the hole while said block is compressed.	*Lievestro discloses this claim limitation.* See steps 2[a] and 2[d], above.

(Exhibit 1006, Brienza Decl., ¶ 59).

B. Ohta

Ohta describes a method for forming pillows with multiple through-holes that overcame problems encountered when creating perforated pillows made from memory foam. (Exhibit 1009, ¶¶ [0001], [0006]). The existing methods for

creating holes in foam blocks (punching without compression and drilling) were judged to be inefficient for various reasons and could result in low quality holes. (Exhibit 1009, ¶¶ [0004]–[0006]) (Exhibit 1006, Brienza Decl., ¶ 61).

Ohta recognizes that by creating holes in a pillow, the user would be less likely to experience discomfort due to "muggy feeling," and that memory foam was a type of material for pillows for some users. (Exhibit 1009, ¶ [0002]). The word "muggy" means "hot and damp with little or no stirring of the air." (Exhibit 1014, p. 945). Thus, a POSITA would understand that Ohta's invention addresses discomfort caused by a warm, high relative humidity microclimate at the interface between the user's body and the pillow that could be improved by providing holes and the resulting airflow that the holes promote. (Exhibit 1006, Brienza Decl., ¶ 62).

Figures 1–6 from Ohta, reproduced below, show the steps of the method for forming pillows with multiple through-holes. (Exhibit 1006, Brienza Decl., ¶ 63).

According to Ohta:

> Figure 1 shows a schematic cross-sectional view of a foam body placed on a press body according to one embodiment of the present invention. Figure 2 shows a schematic cross-sectional view of said embodiment in the state in which the foam body is compressed. Figure 3 shows a schematic cross-sectional view of said embodiment in the state in which holes have been punched through the foam body. Figure 4 shows a schematic cross-sectional view of said embodiment

in the state in which the punching blades have been pulled out of the foam body. Figure 5 shows a schematic cross-sectional view of said embodiment in the state in which the foam body has been released from the compressed state. And Figure 6 shows a perspective view of a perforated pillow obtained through the production according to said embodiment.

(Exhibit 1009, ¶ [0018]) (Exhibit 1006, Brienza Decl., ¶ 64).

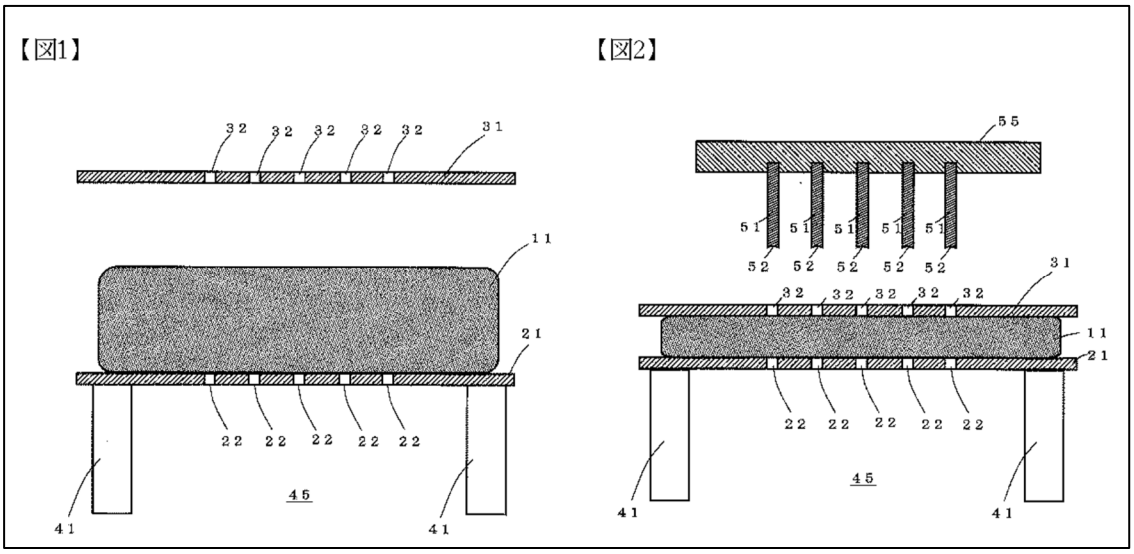

Ohta Figs. 1 and 2

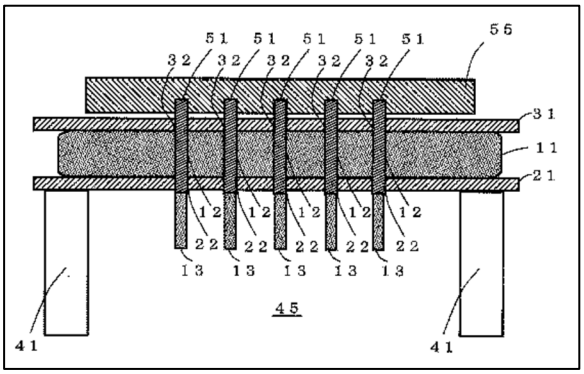

Ohta Fig. 3

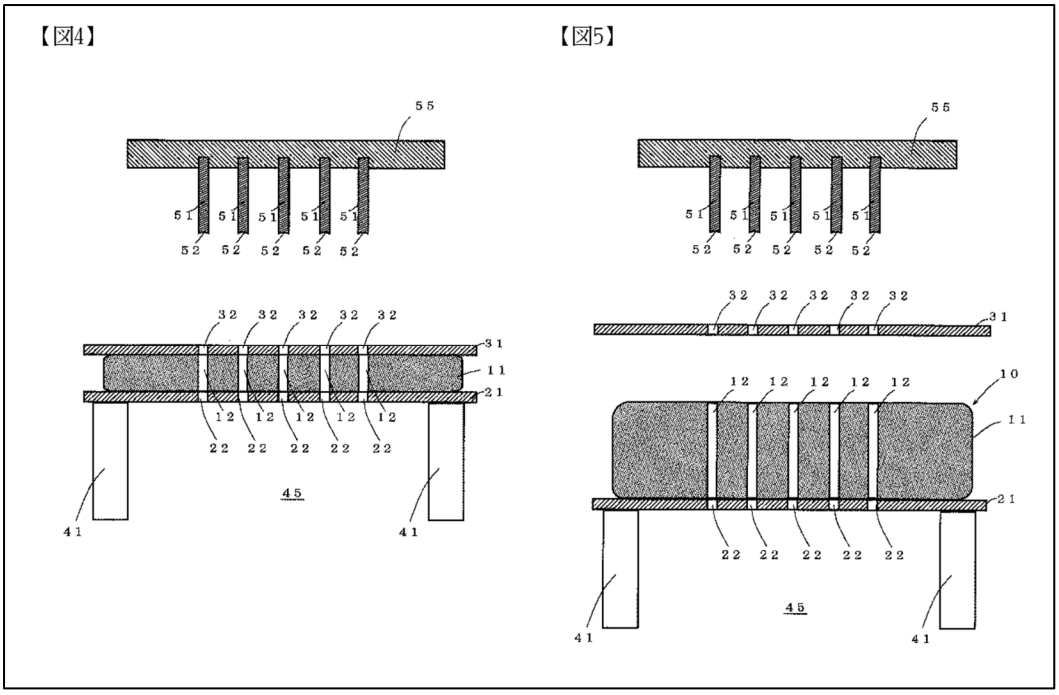

Ohta Figs. 4 and 5

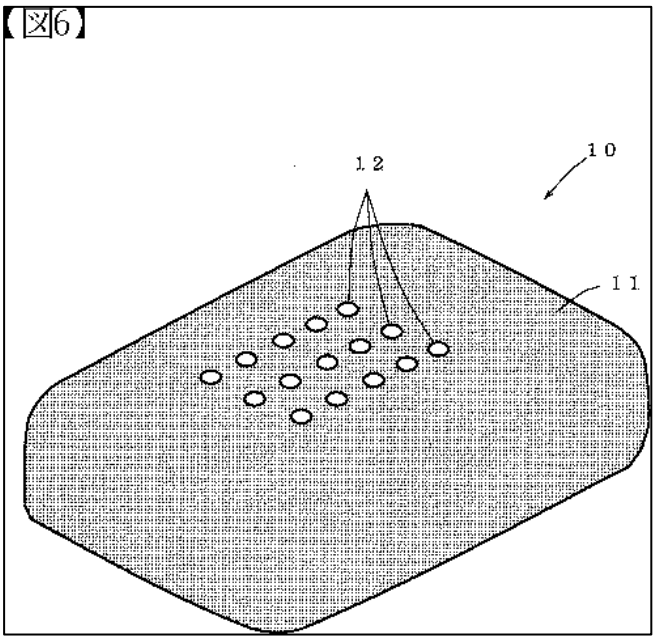

Ohta Fig. 6

To elaborate, in Ohta Fig. 1, Ohta shows a solid foam body (block) 11 (a piece of foam that tends to keep its form) located between two press bodies 21 and 31 with corresponding holes 22 and 32. (Exhibit 1009, ¶ [0031]). As shown in Ohta Fig 1, the solid foam block 11 has a surface. (Exhibit 1006, Brienza Decl., ¶ 65).

In Ohta Fig. 2, Ohta shows the foam body (block) 11 compressed (made more compact by pressure) between press bodies 21 and 31 and discloses such a compression of the foam block down to 5% of the block's relaxed (uncompressed) shape. (Exhibit 1009, ¶¶ [0031], [0033]). A POSITA would have understood that compressing memory foam block down to 5% of its uncompressed shape opens (breaks) some of the foam block's closed cells, without complete separation of the foam block, and corresponds to the "cracking said block" step of claim 1 of the '301 Patent. (Exhibit 1006, Brienza Decl., ¶ 66).

Following the compression/cracking step illustrated in Ohta Fig 2, Ohta Fig 3 shows the punching blades (51) being pressed through the compressed foam block 11 and through the block's surface. (Exhibit 1009, ¶ [0034]). Thus, Ohta discloses forming holes into the foam block 11 and through the block's surface while the block is compressed. (Exhibit 1006, Brienza Decl., ¶ 67).

Ohta Fig. 4 illustrates the punching blades 51 being pulled out of the foam block 11, exposing the holes 12 that have been formed in the foam block. (Exhibit 1009, ¶ [0034]) (Exhibit 1006, Brienza Decl., ¶ 68).

Ohta Fig. 5 shows the compression release step, in which the press bodies 21 and 31 are moved away from each other, thereby releasing the compression on the foam block 11 and allowing the foam block to return (spring back) to its uncompressed shape. (Exhibit 1009, ¶ [0035]). Thus, Ohta's solid and compressible foam block is also resilient. In fact, Ohta discloses the foam block having resilience of 30%. (Exhibit 1009, ¶ [0015]) (Exhibit 1006, Brienza Decl., ¶ 69).

The resulting perforated pillow, which is a bedding product, is shown in Ohta Fig. 6 in the uncompressed state. (Exhibit 1009, ¶ [0035]) (Exhibit 1006, Brienza Decl., ¶ 70).

1. Ohta and Claim 1

Regarding claim 1 of the '301 Patent, Ohta discloses all the steps of the claimed method, except for the step of "applying phase change material to said surface." This is shown in the chart below:

U.S. Patent No. 10,842,301	**Ohta (Exhibit 1009)**
1. A process for manufacturing bedding, which comprises:	*The preamble is not believed to be limiting. Nevertheless, Ohta discloses a process for manufacturing a perforated pillow, which is bedding:* "The present invention pertains to a method for the production of perforated pillows that have through-holes formed therein." (¶ [0001]).

[a] providing a solid, resilient, compressible foam block, said block having a surface;	*Ohta discloses this claim limitation.* Ohta discloses providing a solid foam body 11 (a piece of foam that tends to keep its form) that is compressible. "Figure 1 shows a schematic cross-sectional view of a foam body placed on a press body according to one embodiment of the present invention. Figure 2 shows a schematic cross-sectional view of said embodiment in the state in which the foam body is compressed." (¶ [0018]). 【図1】 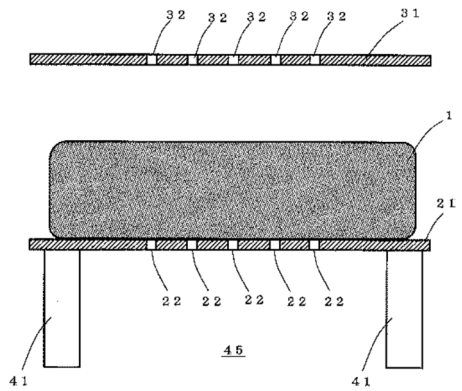 Ohta Fig. 1 【図2】 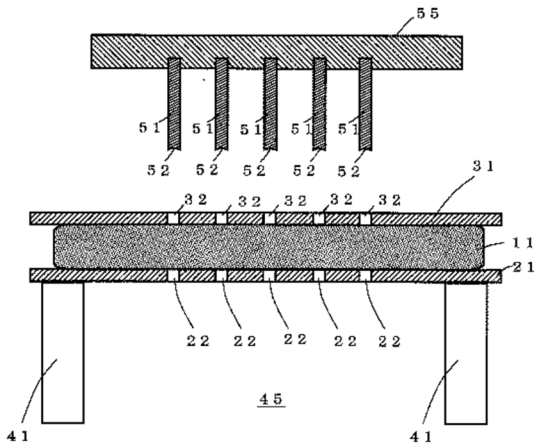 Ohta Fig. 2

	As can be seen from Figure 1, Ohta's solid compressible foam block has a surface. In addition, Figure 5 shows that, after compression is removed, the foam block 11 returns to its uncompressed shape. Accordingly, Ohta's solid compressible block is also resilient. 【図5】 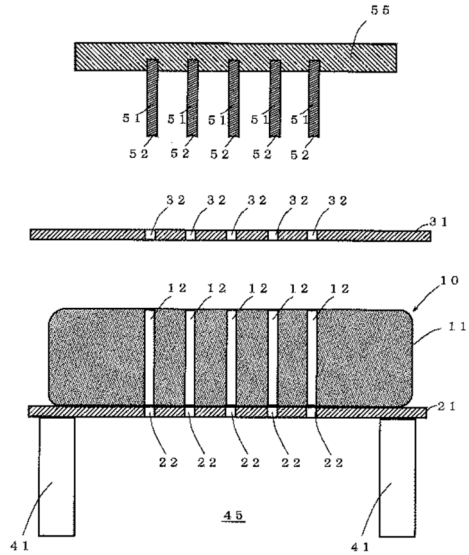 Ohta Fig. 5 In fact, Ohta's discloses the foam block having resilience of 30%. "The invention of Claim 1 eliminates the need for the task of removing punched-out pieces, thus making it possible to produce perforated pillows efficiently, even when the foam body is a memory-foam body with a rebound resilience of 30% or less." (¶ [0015]).
[b] applying phase change material to said surface;	*Ohta is missing this limitation.*

[c] forming a hole into said block and through said surface; and	*Ohta discloses this claim limitation.* For example, Ohta Fig. 3 shows the punching blades (51) being pressed through the compressed foam block 11 and through the block's surface. "Figure 3 shows a schematic cross-sectional view of said embodiment in the state in which holes have been punched through the foam body. Figure 4 shows a schematic cross-sectional view of said embodiment in the state in which the punching blades have been pulled out of the foam body." (¶ [0018]). 【図3】 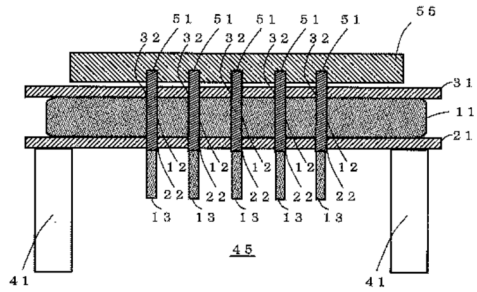 Ohta Fig. 3 【図4】 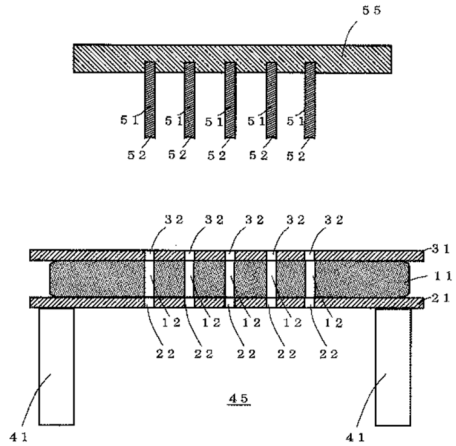 Ohta Fig. 4

[d] cracking said block.	*Ohta discloses this claim limitation.* Ohta discloses compressing the foam block down to 5% of its uncompressed state. "As shown in figures 1 and 2, in the step of compressing the foam body thus formed, foam body 11 is first placed between two press bodies 21 and 31 comprising punching holes 22 and 32 that are formed at the positions corresponding to each other. Then, foam body 11 is compressed between said two press bodies." (¶ [0031]). 【図1】 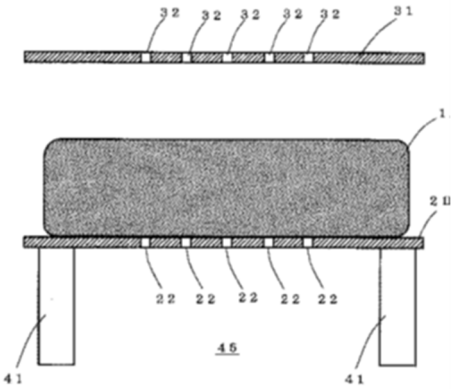 Ohta Fig. 1 【図2】 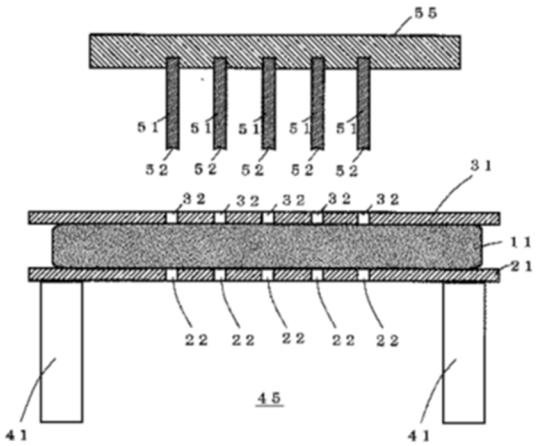 Ohta Fig. 2.

	"For the compression of foam body 11 between the aforementioned press bodies 21 and 31, the compression rate is preferably 5% to 40%, as calculated with the following formula: [Thickness of foam body 11 in the compressed state / Thickness of foam body 11 before compression x 100]" (¶ [0033]). A person of skill in the art at the time of the invention would have understood that compressing memory foam block down to 5% of its uncompressed state opens some of the foam block's closed cells, without complete separation of the foam block, and corresponds to the "cracking said block" step of claim 1 of the '301 Patent.

(Exhibit 1006, Brienza Decl., ¶ 71).

2. Ohta and Claim 2

Regarding claim 2, Ohta also discloses all the steps of the claimed method, except for the step of "applying phase change material to said surface." This is shown in the chart below:

U.S. Patent No. 10,842,301	**Ohta (Exhibit 1009)**
2. A process for manufacturing bedding, which comprises:	*The preamble is not believed to be limiting. Nevertheless, Ohta discloses a process for manufacturing a perforated pillow, which is bedding:* "The present invention pertains to a method for the production of perforated pillows that have through-holes formed therein." (¶ [0001]).

[a] providing a solid, resilient, compressible foam block, said block having a surface;	*Ohta discloses this claim limitation.* Ohta discloses providing a solid foam body 11 (a piece of foam that tends to keep its form) that is compressible. "Figure 1 shows a schematic cross-sectional view of a foam body placed on a press body according to one embodiment of the present invention. Figure 2 shows a schematic cross-sectional view of said embodiment in the state in which the foam body is compressed." (¶ [0018]). 【図1】 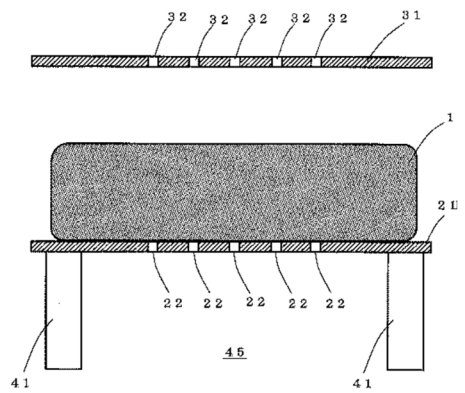 Ohta Fig. 1 【図2】 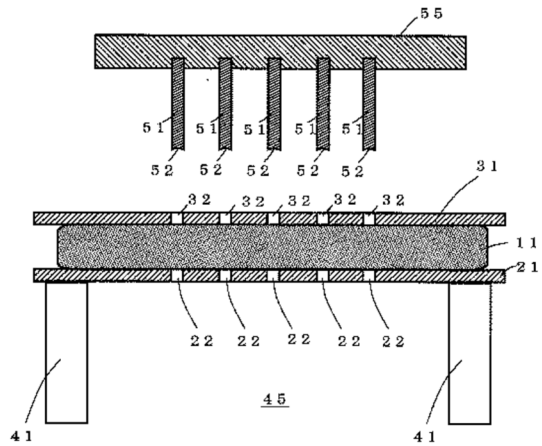 Ohta Fig. 2

	As can be seen from Ohta Fig. 1, Ohta's solid compressible foam block has a surface. In addition, Ohta Fig. 5 shows that, after compression is removed, the foam block 11 returns to its uncompressed shape. Accordingly, Ohta's solid compressible block is also resilient. 【図5】 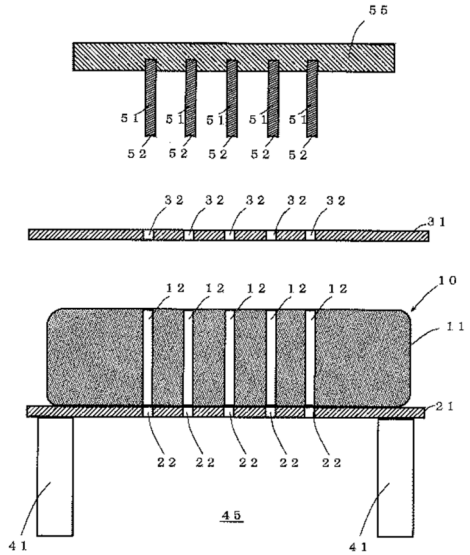 Ohta Fig. 5 In fact, Ohta's discloses the foam block having resilience of 30%. "The invention of Claim 1 eliminates the need for the task of removing punched-out pieces, thus making it possible to produce perforated pillows efficiently, even when the foam body is a memory-foam body with a rebound resilience of 30% or less." (¶ [0015]).
[b] applying phase change material to said surface;	*Ohta is missing this claim limitation.*

[c] forming a hole into said block and through said surface;	*Ohta discloses this claim limitation.* For example, Figure 3 shows the punching blades (51) being pressed through the compressed foam block 11 and through the block's surface. "Figure 3 shows a schematic cross-sectional view of said embodiment in the state in which holes have been punched through the foam body. Figure 4 shows a schematic cross-sectional view of said embodiment in the state in which the punching blades have been pulled out of the foam body." (¶ [0018]). 【図3】 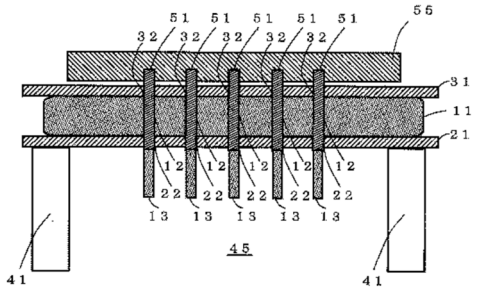 Ohta Fig. 3 【図4】 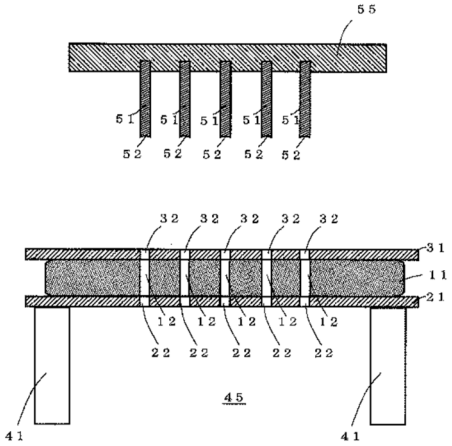 Ohta Fig. 4

[d] compressing said block by pressing on said surface before the forming of the hole; and	*Ohta discloses this claim limitation.* "The following is an explanation of embodiments of the present invention: Figure 1 shows a schematic cross-sectional view of a foam body placed on a press body according to one embodiment of the present invention. Figure 2 shows a schematic cross-sectional view of said embodiment in the state in which the foam body is compressed. Figure 3 shows a schematic cross-sectional view of said embodiment in the state in which holes have been punched through the foam body." (¶ [0018]). 【図1】 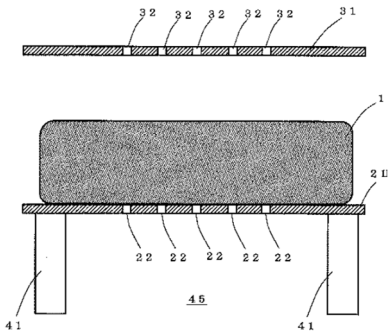 Ohta Fig. 1 【図2】 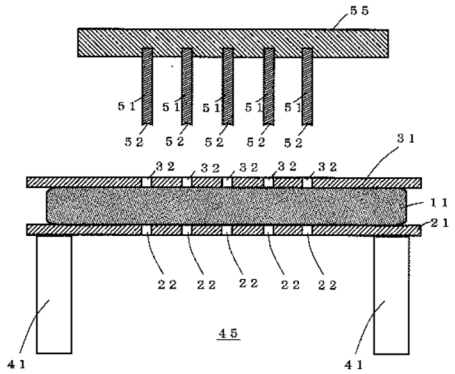 Ohta Fig. 2

	【図3】 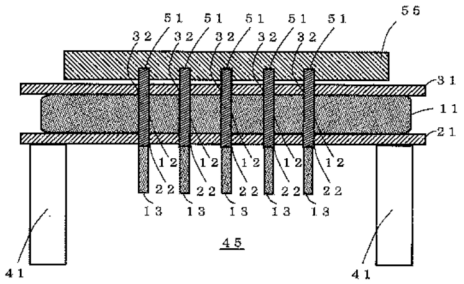 Ohta Fig. 3
[e] performing the forming of the hole while said block is compressed.	*Ohta discloses this claim limitation.* See step 2[d], above.

(Exhibit 1006, Brienza Decl., ¶ 72).

C. Crawford

Crawford discloses "method[s] for making and using at least one surface infused gel layer located on … cushioning foams and mattresses" made up of flexible foams, such as a high-resiliency polyether polyurethane foam, to improve foam's thermal conductivity. (Exhibit 1011, ¶ [0002]; *see also* [0008] and Abstract). Moreover, to provide a cooler and more comfortable sleep to the user, Crawford teaches that the gel layer on the surface of the foam block can include PCM for thermally enhanced construction, allowing for storage or release of thermal energy. "Addition of phase change materials to the liquid gel mixture used for producing surface-infused gel layers allows the construction composite to store or release energy, which is higher than heat absorbed or released by heat capacity

of the non-thermally enhanced construction." (Exhibit 1011, ¶ [0060]; *see also* [0056], [0061]–[0062], [0115]). Crawford expressly teaches the use of such PCM containing surface-infused gel layer in a mattress. "FIGS. 16 and 17 are meant to illustrate the usage of surface-infused gel layers in different regions of the mattress to enhance thermal conductivity in specific regions; they are not to be interpreted as limiting design figures." (Exhibit 1011, ¶ [0108]) (Exhibit 1006, Brienza Decl., ¶ 74).

Crawford discloses several methods for applying the liquid gel mixture, which optionally includes PCM, on the surface of a solid, resilient, compressible foam block, including those illustrated in Crawford Figs. 19 and 27. (Exhibit 1006, Brienza Decl., ¶ 75).

Crawford Fig. 19, reproduced below, shows a system and method utilizing several rollers to apply the liquid gel mixture, which optionally contains PCM, on the surface of a foam substrate (foam block) and to process it. A pair of upper rollers (8) and (9) feed the liquid gel coating onto the top surface of a solid foam block (a piece of foam that tends to keep its form) (14). Upper roller (9) is configured with a corresponding lower roller (9) that together drive the foam block through the system. A second pair of rollers (10) compresses the foam (makes the foam block more compact by pressure) with the coating applied to a varied thickness (50% in the drawn example), resulting in "[t]he product 13 is a [foam]

substrate with a surface-infused gel liquid." (Exhibit 1011 ¶ [0072]) (Exhibit 1006, Brienza Decl., ¶ 76).

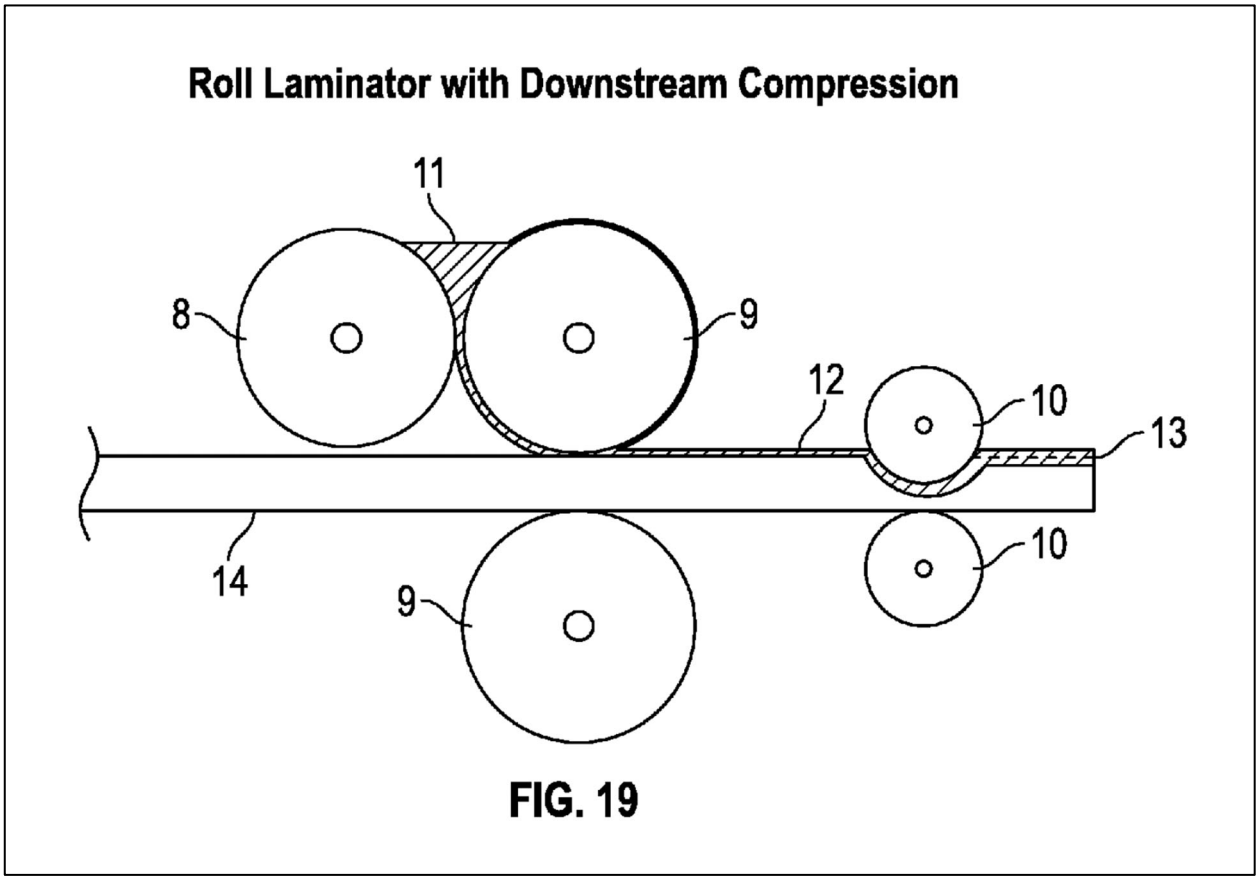

Crawford Fig. 19

Crawford Fig. 27, reproduced below, shows another embodiment of a system and method for applying the liquid gel mixture on a foam surface that optionally includes PCM material, which corresponds to the "phase change material" recited in the claims of the '301 Patent. Specifically, Crawford Fig. 27 and its associated description disclose a system for spraying (coating) the liquid gel mixture (11) onto a non-planar surface of the foam substrate (a piece of foam that

tends to keep its form, *i.e.,* solid foam block) (3). The resulting composition (12) can then be compressed by a pair of rollers (8) and dried to form a final product (13), which is a solid foam block with a surface-infused gel. (Exhibit 1011, ¶ [0076]) (Exhibit 1006, Brienza Decl., ¶ 77).

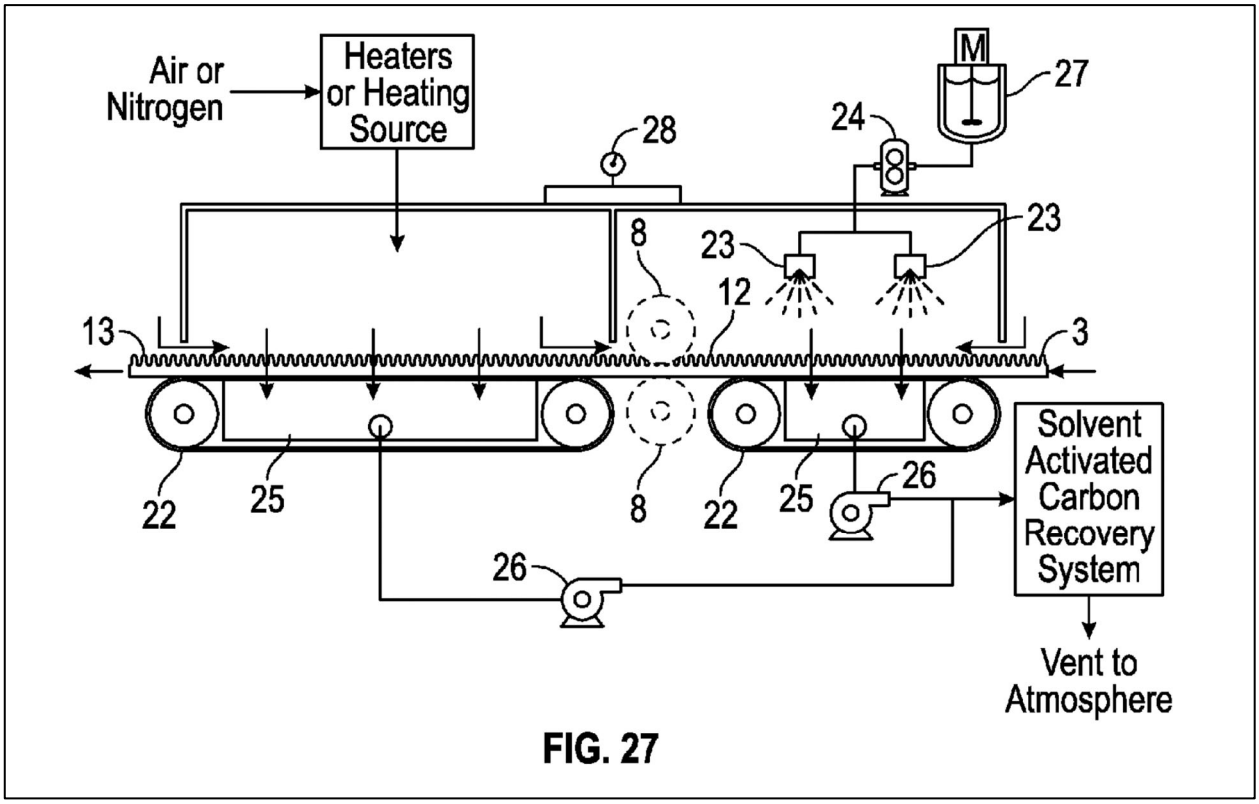

Crawford Fig. 27

Confirming that the solid compressible foam block taught by Crawford is also resilient, the embodiments in Crawford Fig. 19 and 27 show that once the roller-based compression on the foam block is removed, the block springs back (returns) to its uncompressed shape. (Exhibit 1006, Brienza Decl., ¶ 78).

Moreover, Crawford teaches roller-compressing the foam by about 90% of its relaxed (uncompressed) state. "A method of forming a surface-infused gel layer with a lamination system comprising:…compressing the layering substrate in the range of from about 0.1% to about 90%." (Exhibit 1011, Claim 43). A POSITA would have understood that compressing a foam block by about 90% of its uncompressed state as disclosed by Crawford opens (breaks) some of the foam block's closed cells without complete separation of foam and corresponds to the "cracking said block" step of claim 1 of the '301 Patent. (Exhibit 1006, Brienza Decl., ¶ 79).

1. Crawford and Claim 1

Crawford teaches all the elements of the claim 1, except the step of "forming a hole into said block and through said surface." This is shown in the chart below.

U.S. Patent No. 10,842,301	**Crawford (Exhibit 1011)**
1. A process for manufacturing bedding, which comprises:	*The preamble is not believed to be limiting. Nevertheless, Crawford discloses a process for manufacturing a mattress, which is bedding.* "The invention relates to **methods for making** and using at least one surface infused gel layer located on … cushioning foams and **mattresses**." (¶ [0002] [emphasis added]).

[a] providing a solid, resilient, compressible foam block, said block having a surface;	*Crawford discloses this claim limitation.* "There remains a need to improve infusion of **flexible foams** with a gel, and **in particular** to improve the thermal conductivity of flexible foams, … **high-resiliency polyether polyurethane foam**, … latex foam, melamine foam, and combinations thereof." (¶ [0008] [emphasis added]). "FIGS. 16 and 17 are meant to illustrate the usage of surface-infused gel layers in different regions of the **mattress** to enhance thermal conductivity in specific regions; they are not to be interpreted as limiting design figures." (¶ [0108] [emphasis added]). 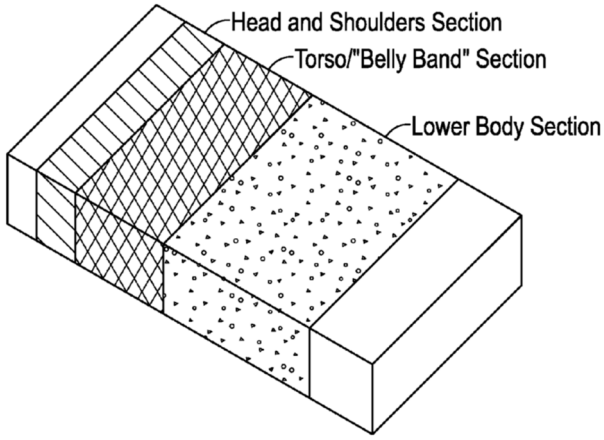 FIG. 16 Crawford Fig. 16. "FIG. 19 depicts a lamination system used to **coat a layering substrate 14 with a liquid gel mixture 11.** A medium-sized roller 8 and a larger-sized roller 9 create a trough for the liquid gel mixture 11. The liquid gel mixture is then applied to the layering substrate 14 as a larger-sized roller 9 moves the layering substrate through the process. **The product 12 is an evenly coated substrate with a surface-infused gel liquid mixture. The gel liquid-coated substrate 12 is then compressed to a varied thickness (50% in the drawn example)** between two smaller-sized rollers 10, which infuses the

	liquid gel mixture within the layering substrate. The product 13 is a substrate with a surface-infused gel liquid." (¶ [0072] [emphasis added]). 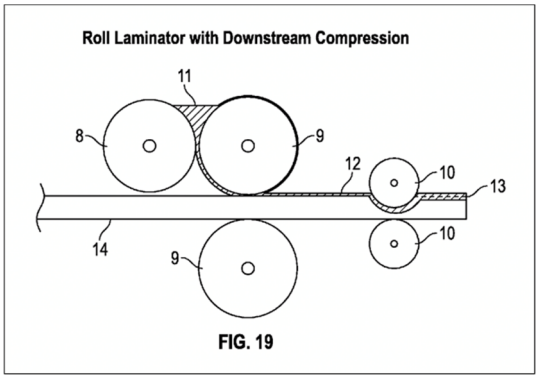 Crawford Fig. 19. "Alternatively, FIG. 27 depicts a spraying and drying system used to **coat a non-planar substrate 3 with a liquid gel mixture 11.** The substrate is moved by a conveyor 22 into a spraying chamber kept under a negative pressure by a vacuum table 25. The liquid gel mixture 11, which is fed by a gear pump 24 connected to a liquid gel mixture agitation vessel 27, is sprayed through nozzles 23 onto the non-planar surface 3. **The result is an evenly coated substrate with surface-infused gel liquid 12.** Optionally, two medium-sized rollers 8, vertically aligned on their center lines with an adjustable gap between them, may be utilized after spray coating. These **rollers are driven and the coated substrate 12 is fed through the gap and compressed.** The optional result is a product 13, which is a substrate with a surface-infused gel liquid." (¶ [0076] [emphasis added]).

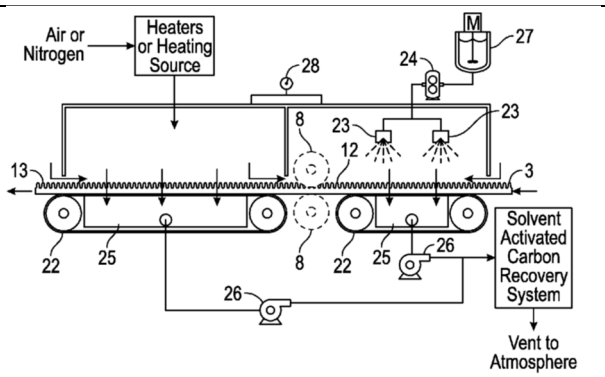

Crawford Fig. 27

[b] applying phase change material to said surface;	*Crawford discloses this claim limitation.* "Addition of phase change materials to the liquid gel mixture used for producing surface-infused gel layers allows the construction composite to store or release energy, which is higher than heat absorbed or released by heat capacity of the non-thermally enhanced construction." (¶ [0060]). "FIG. 19 depicts a lamination system used to **coat a layering substrate 14 with a liquid gel mixture 11.** A medium-sized roller 8 and a larger-sized roller 9 create a trough for the liquid gel mixture 11. The liquid gel mixture is then applied to the layering substrate 14 as a larger-sized roller 9 moves the layering substrate through the process. **The product 12 is an evenly coated substrate with a surface-infused gel liquid mixture.** The gel liquid-coated substrate 12 is then compressed to a varied thickness (50% in the drawn example) between two smaller-sized rollers 10, which infuses the liquid gel mixture within the layering substrate. The product 13 is a substrate with a surface-infused gel liquid." (¶ [0072] [emphasis added]). 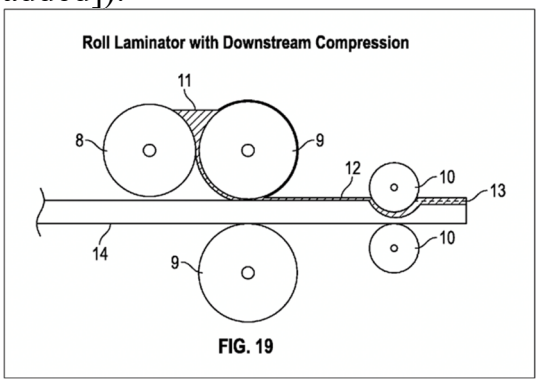 Crawford Fig. 19. "Alternatively, FIG. 27 depicts a spraying and drying system used to **coat a non-planar substrate 3 with a liquid gel mixture 11.** The substrate is moved by a conveyor 22 into a spraying chamber kept under a negative pressure by a vacuum table 25. The liquid gel mixture 11, which is fed by a gear pump 24 connected to

	a liquid gel mixture agitation vessel 27, is sprayed through nozzles 23 onto the non-planar surface 3. **The result is an evenly coated substrate with surface-infused gel liquid 12.** Optionally, two medium-sized rollers 8, vertically aligned on their center lines with an adjustable gap between them, may be utilized after spray coating. These rollers are driven and the coated substrate 12 is fed through the gap and compressed. The optional result is a product 13, which is a substrate with a surface-infused gel liquid." (¶ [0076] [emphasis added]). 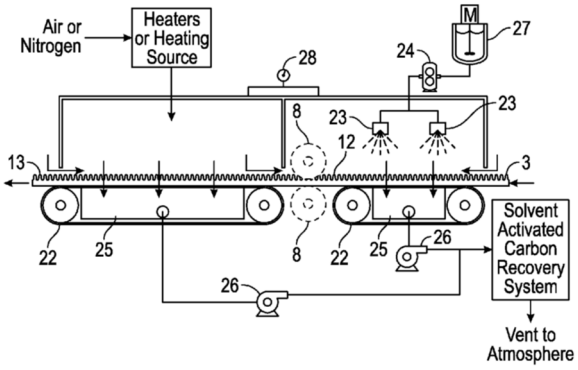 Crawford Fig. 27
[c] forming a hole into said block and through said surface; and	*Crawford is missing this claim limitation.*

[d] cracking said block.	*Crawford discloses this claim limitation.* Crawford discloses compressing the foam block by about 90% of its uncompressed state. "A method of forming a surface-infused gel layer with a lamination system comprising: …. compressing the layering substrate in the range of from about 0.1% to about 90%." (Claim 43). A POSITA would have understood that compressing a foam block by about 90% of its uncompressed state opens some of the foam block's closed cells, without compete separation of the foam block, and corresponds to the "cracking said block" step of claim 1 of the '301 Patent.

(Exhibit 1006, Brienza Decl., ¶ 80).

2. Crawford and Claim 2

Regarding claim 2 of the '301 Patent, because Crawford does not teach making holes in the foam block, Crawford discloses all the steps of the claim, except the following bolded terms: (a) "**forming a hole into said block and through said surface**"; (b) "compressing said block by pressing on said surface **before the forming of the hole**"; and (c) "**performing the forming of the hole while said block is compressed**." This is shown in the chart below.

U.S. Patent No. 10,842,301	**Craford (Exhibit 1011)**
2. A process for manufacturing bedding, which comprises:	*The preamble is not believed to be limiting. Regardless, Crawford discloses a process for manufacturing a mattress, which is bedding.* "The invention relates to **methods for making** and using at least one surface infused gel layer located on … cushioning foams and **mattresses**." (¶ [0002] [emphasis added]).

[a] providing a solid, resilient, compressible foam block, said block having a surface;	Crawford discloses this claim limitation. "There remains a need to improve infusion of **flexible foams** with a gel, and **in particular** to improve the thermal conductivity of flexible foams, … **high-resiliency polyether polyurethane foam**, … latex foam, melamine foam, and combinations thereof." ([0008] [emphasis added]). "FIGS. 16 and 17 are meant to illustrate the usage of surface-infused gel layers in different regions of the **mattress** to enhance thermal conductivity in specific regions; they are not to be interpreted as limiting design figures." (¶ [0108] [emphasis added]). 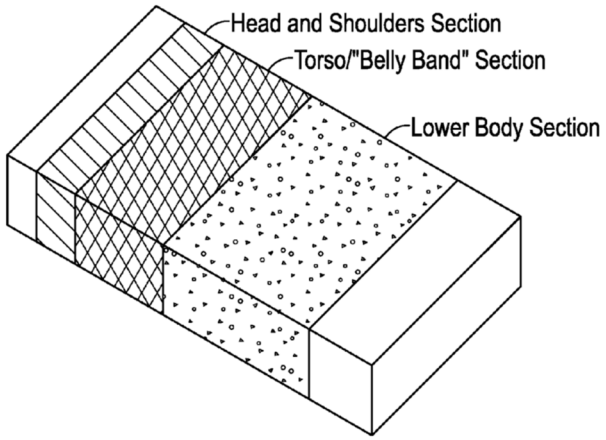 FIG. 16 Crawford Fig. 16. "FIG. 19 depicts a lamination system used to **coat a layering substrate 14 with a liquid gel mixture 11.** A medium-sized roller 8 and a larger-sized roller 9 create a trough for the liquid gel mixture 11. The liquid gel mixture is then applied to the layering substrate 14 as a larger-sized roller 9 moves the layering substrate through the process. **The product 12 is an evenly coated substrate with a surface-infused gel liquid mixture. The gel liquid-coated substrate 12 is then compressed to a varied**

	thickness (50% in the drawn example) between two smaller-sized rollers 10, which infuses the liquid gel mixture within the layering substrate. The product 13 is a substrate with a surface-infused gel liquid." (¶ [0072] [emphasis added]). 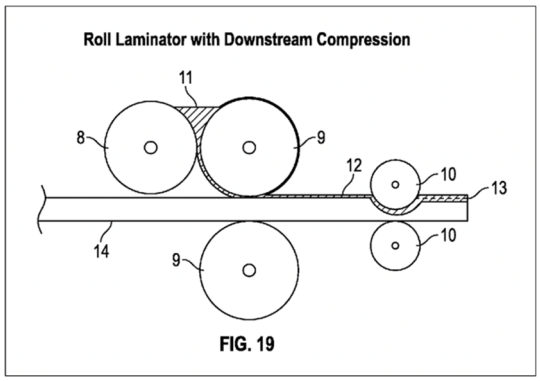 Crawford Fig. 19. "Alternatively, FIG. 27 depicts a spraying and drying system used to **coat a non-planar substrate 3 with a liquid gel mixture 11.** The substrate is moved by a conveyor 22 into a spraying chamber kept under a negative pressure by a vacuum table 25. The liquid gel mixture 11, which is fed by a gear pump 24 connected to a liquid gel mixture agitation vessel 27, is sprayed through nozzles 23 onto the non-planar surface 3. **The result is an evenly coated substrate with surface-infused gel liquid 12.** Optionally, two medium-sized rollers 8, vertically aligned on their center lines with an adjustable gap between them, may be utilized after spray coating. These **rollers are driven and the coated substrate 12 is fed through the gap and compressed.** The optional result is a product 13, which is a substrate with a surface-infused gel liquid." (¶ [0076] [emphasis added]).

	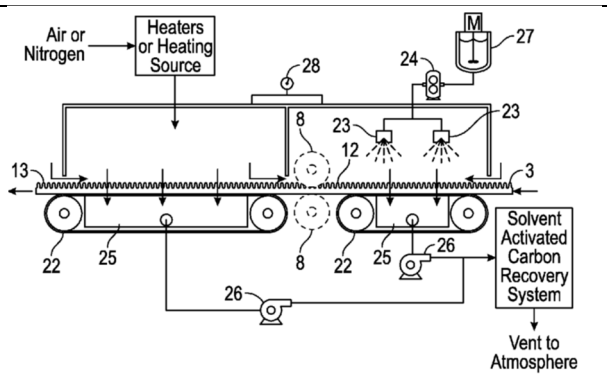 Crawford Fig. 27

[b] applying phase change material to said surface;	Crawford discloses this claim limitation. "Addition of phase change materials to the liquid gel mixture used for producing surface-infused gel layers allows the construction composite to store or release energy, which is higher than heat absorbed or released by heat capacity of the non-thermally enhanced construction." (¶ [0060]). "FIG. 19 depicts a lamination system used to **coat a layering substrate 14 with a liquid gel mixture 11.** A medium-sized roller 8 and a larger-sized roller 9 create a trough for the liquid gel mixture 11. The liquid gel mixture is then applied to the layering substrate 14 as a larger-sized roller 9 moves the layering substrate through the process. **The product 12 is an evenly coated substrate with a surface-infused gel liquid mixture.** The gel liquid-coated substrate 12 is then compressed to a varied thickness (50% in the drawn example) between two smaller-sized rollers 10, which infuses the liquid gel mixture within the layering substrate. The product 13 is a substrate with a surface-infused gel liquid." (¶ [0072] [emphasis added]). 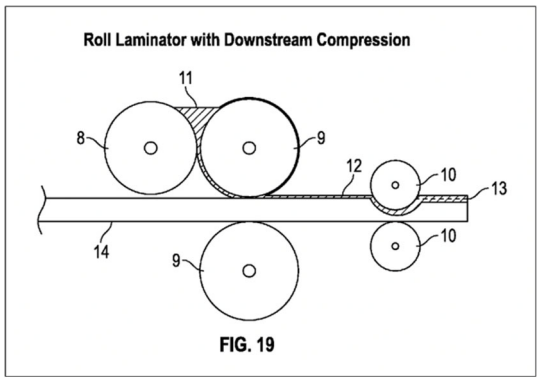 Crawford Fig. 19. "Alternatively, FIG. 27 depicts a spraying and drying system used to **coat a non-planar substrate 3 with a liquid gel mixture 11.** The substrate is moved by a conveyor 22 into a spraying chamber kept under a

	negative pressure by a vacuum table 25. The liquid gel mixture 11, which is fed by a gear pump 24 connected to a liquid gel mixture agitation vessel 27, is sprayed through nozzles 23 onto the non-planar surface 3. **The result is an evenly coated substrate with surface-infused gel liquid 12.** Optionally, two medium-sized rollers 8, vertically aligned on their center lines with an adjustable gap between them, may be utilized after spray coating. These rollers are driven and the coated substrate 12 is fed through the gap and compressed. The optional result is a product 13, which is a substrate with a surface-infused gel liquid." (¶ [0076] [emphasis added]). 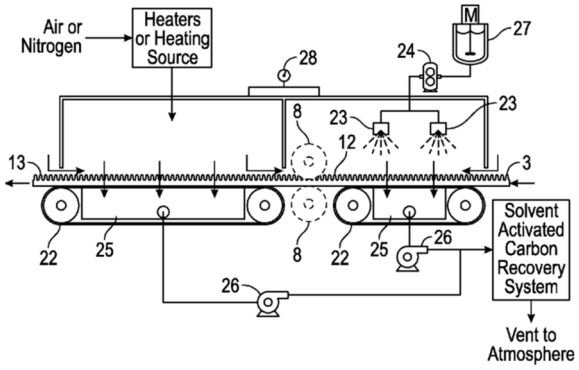 Fig. 27.
[c] forming a hole into said block and through said surface;	*Crawford is missing this claim limitation.*
[d] compressing said block by pressing on said surface before the forming of the hole; and	*Although Crawford discloses compressing the foam block by pressing on the block's surface, because Crawford does not disclose "forming of a hole into said block and though said surface" limitation of clam 2[c], Crawford does not disclose compression "before" the forming of the hole.*

[e] performing the forming of the hole while said block is compressed.	*Although Crawford discloses compressing the foam block, because Crawford does not disclose "forming of a hole into said block and though said surface" limitation of claim 2[c], Crawford does not disclose "forming of the hole while" the block is compressed.*

(Exhibit 1006, Brienza Decl., ¶ 81).

D. Schneider

Schneider discloses a washable mattress assembly with supporting layers. The mattress assembly 100 includes one or more removable foam panels (layers) 128 of foam 126 that can be made from viscoelastic memory foam or resilient gel foam. (Exhibit 1010, ¶ 0018). Thus, a POSITA would have understood each layer 128 of Schneider's mattress, which is a bedding, to include a foam block that tends to keep its shape (*i.e.*, solid), able to be made more compact by pressure (*i.e.*, compressible), and able to bounce back into shape after pressure is removed (*i.e.*, resilient). (Exhibit 1006, Brienza Decl., ¶ 83).

As demonstrated in Schneider Figs. 6 and 8 below, Schneider also shows that the foam layers 128 include holes through the foam and its surface. (Exhibit 1006, Brienza Decl., ¶ 84).

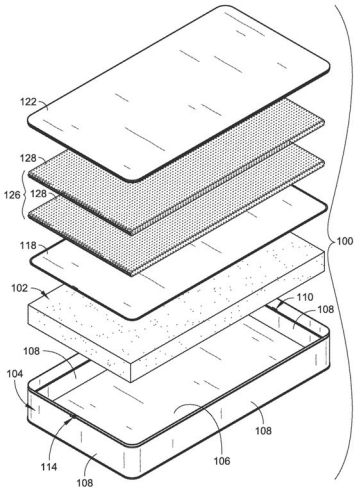

FIG. 6

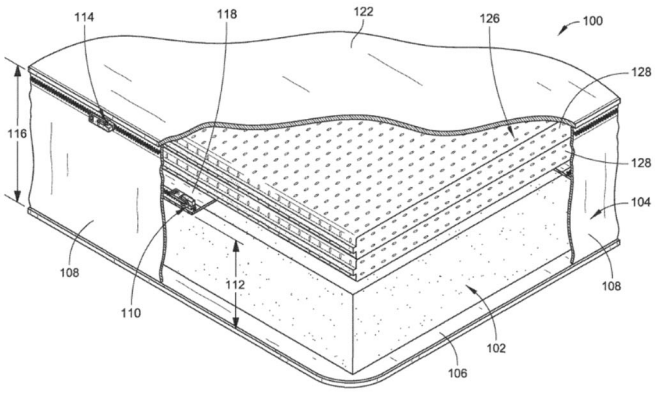

FIG. 8

Schneider Figs. 6 and 8

Importantly, to provide significant cooling benefits, Schneider further discloses that one of the options is to have the foam layer be coated with a layer of PCM that corresponds to the "phase change material" recited in the claims of the '301 Patent:

> In some embodiments, the washable mattress comprises a microencapsulated phase change material. For instance, a second eight and one-quarter centimeter (8.25 cm) or **three and one-quarter inch (3.25") removable layer of memory foam can be coated with a layer of phase change gel material.** This phase change gel material may be similar to the phase change gel material described in International Patent Application Number WO2011/107849, which is incorporated herein by reference. The phase change gel comprises extremely small capsules (typically five (5) to forty (40) microns for use in foam production) that permanently contain phase change materials (PCMs) and **allow the PCM to absorb thermal energy**

> **when exposed to heat.** Test results demonstrate the ability of Phase Change Gel **to provide significant cooling benefits when applied to flexible polyurethane foam**."

(Exhibit 1010, ¶ [0029] [emphasis added]) (Exhibit 1006, Brienza Decl., ¶ 85).

VI. PRECISE REASON FOR RELIEF REQUESTED

An invention is obvious when the differences between the subject matter sought to be patented and the prior art are such that the subject matter as a whole would have been obvious to a POSITA. To prove that a combination of prior art renders a claim obvious, Petitioner must: (i) identify the particular references that in combination make the patent claim obvious; (ii) specifically identify which elements of the patent claim appear in each of the asserted references; (iii) explain why and how a POSITA would have combined the references to create the claimed invention; and (iv) evaluate secondary considerations. *Graham v. John Deere Co.*, 383 U.S. 1, 17–18 (1966).

Further, when the prior art provides the means of making the invention and predicts the results, and the claims at issue merely verify the expectation through routine testing, these claims may be obvious. *Pfizer, Inc. v Apotex, Inc.*, 480 F.3d 1348, 1367 (Fed. Cir. 2007). Thus, if a technique has been used to improve one device, and a POSITA would recognize that it would improve similar devices in the same way, using the technique is obvious unless its actual application is

beyond the POSITA's skill. *KSR International Co. v. Teleflex Inc.,* 550 U.S. 398, 417 (2007).

In view of the prior art and evidence, this IPR Petition should be granted on each of the following grounds demonstrating that claims 1 and 2 of the '301 Patent are unpatentable as obvious. 35 U.S.C. § 311; 37 C.F.R. § 42.104(b)(1)–(2).

Ground	Statute	References	Claims
1	§ 103	Lievestro in view of Schnider	1, 2
2	§ 103	Crawford in view of Lievestro	1, 2
3	§ 103	Ohta in view of Schneider	1, 2
4	§ 103	Ohta in view of Crawford	1, 2

A. Claims 1 and 2 are Obvious Based on Lievestro in view of Schneider

1. Claim 1

As shown above, while teaching a method for manufacturing bedding with improved comfort, Lievestro discloses all the limitations of claim 1 except the step of "applying phase change material to said surface" of the foam block. Concerning the holes formed in Lievestro's foam block and through the block's surface, a POSITA would have understood that the holes provide a cooling effect to the user via circulating air to the user interface when the block is compressed during use. In fact, existence of this air flow-based cooling effect was confirmed during

prosecution of the ’301 Patent when Patent Owner stated that perforation (holes) in a foam block increase air displacement when the block is compressed during use. (Exhibit 1002, 5/15/2018 Amendment, p. 87) (Exhibit 1006, Brienza Decl., ¶ 86).

As shown above, Schneider suggests applying PCM to the surface of a foam block, thus teaching the step missing in Lievestro. In fact, Schneider does so for cooling (comfort) purposes, in the context of a bedding product that also uses a solid, compressible, resilient foam block that includes holes. (Exhibit 1006, Brienza Decl., ¶ 87).

Given that both prior art references are in the same art and both deal with enhancing comfort, which includes thermal comfort, a POSITA would have been motivated to coat the surface of the perforated foam block of Lievestro with PCM as suggested by Schneider. Because claim 1 allows the steps of PCM application, hole making, and cracking to be performed in any order, PCM coating of Lievestro’s foam block could be done either prior to or after Lievestro’s cracking and hole-making operations. This would yield a predictable result of having a bedding product that absorbs heat and provides an enhanced cooling effect to the user. (Exhibit 1006, Brienza Decl., ¶ 88).

2. Claim 2

As shown above, while teaching a method for manufacturing bedding having improved comfort, Lievestro discloses all the limitations of claim 2 except the step

of "applying phase change material to said surface" of the foam block. Concerning the holes formed in Lievestro's foam block and through the block's surface, a POSITA would have understood that the holes provide a cooling effect to the user via circulating air to the user interface when the block is compressed during use. In fact, existence of this air flow-based cooling effect was confirmed during prosecution of the '301 Patent when Patent Owner stated that perforation (holes) in a foam block increase air displacement when the block is compressed during use. (Exhibit 1002, 5/15/2018 Amendment, p. 87) (Exhibit 1006, Brienza Decl., ¶ 89).

As shown above, Schneider suggests applying PCM to the surface of a foam block, thus teaching the step missing in Lievestro. In fact, Schneider does so for cooling (comfort) purposes, in the context of a bedding product that also uses a solid, compressible, resilient foam block that includes holes. (Exhibit 1006, Brienza Decl., ¶ 90).

Given that both prior art references are in the same art and both deal with enhancing comfort, which includes thermal comfort, a POSITA would have been motivated to coat the surface of foam block of Lievestro with PCM as suggested by Schneider. Because claim 2 allows the PCM application step to be performed either before or after the step of forming of a hole, PCM coating of Lievestro's foam block could be done either prior to or after Lievestro's compression and hole forming operations. This would yield a predictable result of having a bedding

product that absorbs heat and provides an enhanced cooling effect to the user. (Exhibit 1006, Brienza Decl., ¶ 91).

B. Claims 1 and 2 are Obvious Based on Crawford in view of Lievestro

1. Claim 1

As shown above, while teaching a method for manufacturing bedding having improved cooling effect, Crawford discloses all the limitations of claim 1, except the step of "forming a hole into said block and through said surface." (Exhibit 1006, Brienza Decl., ¶ 92).

At the same time, as shown above, while teaching a method for manufacturing bedding having improved comfort, Lievestro teaches the step missing in Crawford. In fact, Lievestro discloses all the limitations of claim 1, except the step of "applying phase change material to said surface" of the foam block. Concerning the holes formed in Lievestro's foam block and through the block's surface, a POSITA would have understood that the holes provide a cooling effect to the user via circulating air to the user interface when the block is compressed during use. In fact, existence of this air flow-based cooling effect was confirmed during prosecution of the '301 Patent when Patent Owner stated that perforation (holes) in a foam block increase air displacement when the block is compressed during use. (Exhibit 1002, 5/15/2018 Amendment, p. 87) (Exhibit 1006, Brienza Decl., ¶ 93).

Note, the "cracking said block" step of claim 1 of the '301 Patent is disclosed in both Crawford and Lievestro. Given that Crawford and Lievestro are in the same art and both deal with enhancing comfort, which includes thermal comfort, a POSITA would have been motivated to perforate the surface of the foam block of Crawford as taught by Lievestro. As acknowledged by Patent Owner during prosecution of the '301 Patent, the holes would enhance temperature regulation, yielding a predictable result of having a bedding product that absorbs heat and provides an enhanced cooling effect to the user. Because claim 1 allows the PCM application, hole forming, and cracking steps to be performed in any order, making holes in the Crawford's foam block could be achieved, for example, by modifying Crawford's system in two ways: (a) one of Crawford's compression rollers could be modified to use the die-roll body (3) of Lievestro; or (b) Lievestro's die-roll body (3) and counter-punching body 6 could be added to Crawford's system as a separate hole making assembly, located anywhere along Crawford's conveyor-based system. Either modification would be within the scope of knowledge of a POSITA. (Exhibit 1006, Brienza Decl., ¶ 94).

2. Claim 2

As shown above, while teaching a method for manufacturing bedding having an improved cooling effect, Crawford discloses all the limitations of claim 2 except the following bolded terms: (a) "**forming a hole into said block and through said**

surface"; (b) "compressing said block by pressing on said surface **before the forming of the hole**"; and (c) "**performing the forming of the hole while said block is compressed.**" (Exhibit 1006, Brienza Decl., ¶ 95).

At the same time, as shown above, while teaching a method for manufacturing bedding with improved comfort, Lievestro teaches all the steps missing in Crawford. In fact, Lievestro discloses all the limitations of claim 2, except the step of "applying phase change material to said surface" of the foam block Concerning the holes formed in Lievestro's foam block and through the block's surface, a POSITA would have understood that the holes provide a cooling effect to the user via circulating air to the user interface when the block is compressed during use. In fact, existence of this air flow-based cooling effect was confirmed during prosecution of the '301 Patent when Patent Owner stated that perforation (holes) in a foam block increase air displacement when the block is compressed during use. (Exhibit 1002, 5/15/2018 Amendment, p. 87) (Exhibit 1006, Brienza Decl., ¶ 96).

Given that Crawford and Lievestro are in the same art and both deal with enhancing comfort, which includes thermal comfort, a POSITA would have been motivated to perforate the surface of the foam block of Crawford as taught by Lievestro. As acknowledged by Patent Owner during prosecution of the '301 Patent, the holes would enhance temperature regulation, yielding a predictable

result of having a bedding product that absorbs heat and provides an enhanced cooling effect to the user. Because claim 2 allows the PCM application step to be performed either before or after the step of forming of a hole, making holes in the Crawford's foam block could be achieved, for example, by modifying Crawford's system in two ways: (a) modifying one of Crawford's compression rollers to use the die-roll body (3) of Lievestro; or (b) adding Lievestro's die-roll body (3) and counter-punching body 6 to Crawford's system as a separate hole-making assembly, located anywhere along Crawford's conveyor-based system. Either modification would be withing the scope of knowledge of a POSITA. (Exhibit 1006, Brienza Decl., ¶ 97).

C. Claims 1 and 2 are Obvious Based on Ohta in view of Schneider

1. Claim 1

As shown above, while teaching a method for manufacturing bedding with improved comfort, Ohta discloses all the limitations of claim 1 except the step of "applying phase change material to said surface" of the foam block. Concerning the holes formed in Ohta's foam block and through the block's surface, Ohta makes clear that they are made to prevent "muggy feeling," *i.e.*, discomfort caused by a hot and damp microclimate between the user's body and the bedding product during use. (Exhibit 1009, ¶ [0002]; see also Exhibit 1014, p. 945, for dictionary definition of "muggy") (Exhibit 1006, Brienza Decl., ¶ 98).

As shown above, Schneider suggests applying PCM to the surface of a foam block of a mattress assembly, thus teaching the step missing in Ohta. Schneider does so for cooling (comfort) purposes, in the context of a bedding product that uses a foam block that also includes holes. (Exhibit 1006, Brienza Decl., ¶ 99).

Given that both prior art references are in the same art and both deal with enhancing thermal comfort, a POSITA would have been motivated to coat the surface of perforated foam block of Ohta with PCM as suggested by Schneider. Because claim 1 allows the steps of PCM application, hole making, and cracking to be performed in any order, PCM coating of Ohta's foam block could be done either prior to Ohta's cracking operation (which precedes Ohta's hole forming operation) or after Ohta's hole forming operation. This would yield a predictable result of having a bedding product that absorbs heat and provides an enhanced cooling effect to the user. (Exhibit 1006, Brienza Decl., ¶ 100).

2. Claim 2

As shown above, while teaching a method for manufacturing bedding having improved comfort, Ohta discloses all the limitations of claim 2 except the step of "applying phase change material to said surface" of the foam block. Concerning the holes formed in Ohta's foam block and through the block's surface, as explained above, Ohta makes the holes to prevent "muggy feeling," *i.e.*, discomfort caused by a hot and damp microclimate between the user's body and the bedding

product during use. (Exhibit 1009, ¶ [0002]; *see also* Exhibit 1014, p. 945, for dictionary definition of "muggy") (Exhibit 1006, Brienza Decl., ¶ 101).

As shown above, Schneider suggests applying PCM to the surface of a foam block of a mattress assembly, thus teaching the step missing in Ohta. Schneider does so for cooling (comfort) purposes, in the context of a bedding product that also uses a foam block that includes holes. (Exhibit 1006, Brienza Decl., ¶ 102).

Given that both prior art references are in the same art and both deal with enhancing thermal comfort, a POSITA would have been motivated to coat the surface of perforated foam block of Ohta with PCM as suggested by Schneider. Because claim 2 allows the PCM application step to be performed either before or after the step of forming of a hole, PCM coating of Ohta's foam block could be done either prior to Ohta's compression operation (which precedes Ohta's hole-forming operation) or after Ohta's hole-forming operation. This would yield a predictable result of having a bedding product that absorbs heat and provides an enhanced cooling effect to the user. (Exhibit 1006, Brienza Decl., ¶ 103).

D. Claims 1 and 2 are Obvious Based on Ohta in View of Crawford

1. Claim 1

As shown above, while teaching a method for manufacturing bedding having improved comfort, Ohta discloses all of the limitations of claim 1 except the step of "applying phase change material to said surface" of the foam block. Concerning

the holes formed in Ohta's foam block and through the block's surface, Ohta makes clear that the holes prevent "muggy feeling," *i.e.*, discomfort caused by a hot and damp microclimate between the user's body and the bedding product during use. (Exhibit 1009, ¶ [0002]; see also Exhibit 1014, p. 945, for dictionary definition of "muggy") (Exhibit 1006, Brienza Decl., ¶ 104).

As shown above, Crawford teaches applying PCM to the surface of a foam block for use in a mattress, thus teaching the step missing in Ohta. Crawford does so for cooling (comfort) purposes, in the context of a foam block that is solid, compressible, and resilient. (Exhibit 1006, Brienza Decl., ¶ 105).

Given that both prior art references are in the same art and both deal with enhancing thermal comfort, a POSITA would have been motivated to coat the surface of perforated foam block of Ohta with PCM as taught by Crawford. Because claim 1 allows the steps of PCM application, hole making, and cracking to be performed in any order, PCM coating of Ohta's foam block could be done either prior to Ohta's cracking operation (which precedes Ohta's hole forming operation) or after Ohta's hole forming operation. This would yield a predictable result of having a bedding product that absorbs heat and provides an enhanced cooling effect to the user. (Exhibit 1006, Brienza Decl., ¶ 106).

2. Claim 2

As shown above, while teaching a method for manufacturing bedding having improved comfort, Ohta discloses all the limitations of claim 2 except the step of "applying phase change material to said surface" of the foam block. Concerning the holes formed in Ohta's foam block and through the block's surface, as explained above, Ohta makes clear that the holes prevent "muggy feeling," *i.e.*, discomfort caused by a hot and damp microclimate between the user's body and the bedding product during use. (Exhibit 1009, ¶ [0002]; see also Exhibit 1014, p. 945, for dictionary definition of "muggy") (Exhibit 1006, Brienza Decl., ¶ 107).

As shown in the "Crawford" section, above, Crawford teaches applying PCM to the surface of a foam block for use in a mattress, thus teaching the step missing in Ohta. Crawford does so for cooling (comfort) purposes, in the context of a foam block that is solid, compressible, and resilient. (Exhibit 1006, Brienza Decl., ¶ 108).

Given that both prior art references are in the same art and both deal with enhancing thermal comfort, a POSITA would have been motivated to coat the surface of perforated foam block of Ohta with PCM as taught by Crawford. Because claim 2 allows the PCM application step to be performed either before or after the step of forming of a hole, PCM coating of Ohta's foam block could be done either prior to Ohta's compression operation (which precedes Ohta's hole

forming operation), or after Ohta's hole forming operation. This would yield a predictable result of having a bedding product that absorbs heat and provides an enhanced cooling effect to the user. (Exhibit 1006, Brienza Decl., ¶ 109).

E. Secondary Considerations of Nonobviousness do not Apply

Secondary considerations should be considered but do not control the obviousness conclusion. *Newell Cos. v. Kenney Mfg. Co.*, 864 F.2d 757, 768 (Fed. Cir. 1988). Where, as here, a strong *prima facie* obviousness showing exists, even relevant secondary considerations supported by substantial evidence may not dislodge the obviousness conclusion. *Leapfrog Enters. v. Fisher-Price, Inc.*, 485 F.3d 1157, 1162 (Fed. Cir. 2007). Petitioner is aware of no evidence supporting a claim for secondary considerations.

VII. INSTITUTION IS APPROPRIATE UNDER 35 U.S.C. § 325(D)

Lievestro, Ohta, Crawford, and Schneider are not the same (or substantially the same) as the references previously considered by USPTO in the '475 Application, in the '189 PCT Application, or in the '251 Reexam, namely: Mansour, Asklof, Batiste, Lachenbruch, Call, Elkins, Worley, Rose, MacKay, Mikkelsen, Jones, Corodemus, Hartmann, Farley, and HyperChill NPL. Thus, the Board should not deny institution under 35 U.S.C. § 325(d).

VIII. NOTICES AND STATEMENTS

A. Real Party-in-Interest

Pursuant to 37 C.F.R. § 42.8(b)(1), the real party-in-interest is Petitioner, Casper Sleep Inc.

B. Related Matters

Pursuant to 37 C.F.R. § 42.8(b)(2), Petitioner identifies the ’251 Reexam as a possible related matter (to the extent that the ’251 Reexam is a still an active proceeding).

C. Lead and Backup Counsel

Pursuant to 37 C.F.R. § 42.8(b)(3), Petitioner identifies the following counsel (and a power of attorney accompanies this Petition):

Lead Counsel
Mark I. Koffsky (Reg. No. 41,906)
KOFFSKY SCHWALB LLC
500 Seventh Avenue, 8th Floor
New York, New York 10018
Telephone No.: (646) 553-1590
Facsimile No.: (646) 553-1591
mkoffsky@koffskyschwalb.com

Backup Counsel
Gary Serbin (Reg. No. 43,912)
KOFFSKY SCHWALB LLC
500 Seventh Avenue, 8th Floor
New York, New York 10018
Telephone No.: (646) 553-1590
Facsimile No.: (646) 553-1591
gserbin@koffskyschwalb.com

D. Service

Pursuant to 37 C.F.R. § 42.8(b)(4), service information for lead and back-up counsel is provided above. Petitioner consents to electronic service by email to patent@koffskyschwalb.com and mikuspto@gmail.com.

E. Fees

Petitioner authorizes USPTO to charge any required fees, including the fee as set forth in 37 C.F.R. § 42.15(a) and any excess claim fees, to Deposit Account No. 60-4121, referencing Docket No. 1083.0143.

F. Grounds for Standing

Pursuant to 37 C.F.R. § 42.104(a), Petitioner certifies that the ’301 Patent is available for *inter partes* review and that the Petitioner is not barred or estopped from requesting this *inter partes* review challenging the patent claims on the grounds identified in this IPR Petition.

IX. CONCLUSION

Petitioner requests the Board grant this IPR Petition and cancel claims 1 and 2 of the ’301 Patent.

Respectfully submitted,

Dated: January 18, 2024

/Mark I. Koffsky/

Mark I. Koffsky, Registration No. 41,906
mkoffsky@koffskyschwalb.com
Gary Serbin, Registration No. 43,912
gserbin@koffskyschwalb.com
KOFFSKY SCHWALB LLC
500 Seventh Avenue, 8th Floor
New York, New York 10018
Telephone: (646) 553-1590
Facsimile.: (646) 553-1591

Counsel for Petitioner Casper Sleep Inc.

CERTIFICATE OF WORD COUNT

Pursuant to 37 C.F.R. § 42.24(d), Petitioner hereby certifies, in accordance with and reliance on the word count provided by the word-processing system used to prepare this IPR Petition, that the number of words in this paper is 13,518. This word count excludes the table of contents, table of authorities, mandatory notices under § 42.8, certificate of service, certificate of word count, and any claim listing.

Dated: January 18, 2024

/Mark I. Koffsky/
Mark I. Koffsky

CERTIFICATE OF SERVICE

The undersigned certifies that, in accordance with 37 C.F.R. § 42.6(e) and 37 C.F.R. § 42.205, service was made on Patent Owner as detailed below.

Date of Service	January 18, 2024
Manner of Service	Federal Express, next business day
Documents Served	- This Petition - Exhibits 1001 through 1025 - Power of Attorney
Person Served	Loren Donald Pearson Pearson IP 333 2nd Avenue Suite 2000 Miami, Florida 33131

A courtesy copy is also being served via email to additional counsel for Patent Owner:

Greg M. Popowitz, gmp@assoulineberlowe.com
Eric N. Assouline, ena@assoulineberlowe.com
Assouline & Berlowe, P.A.
Miami Tower
100 SE 2nd St., Suite 3105
Miami, Florida 33131

Dated: January 18, 2024 /Mark I. Koffsky/
Mark I. Koffsky