Trials@uspto.gov
571-272-7822

Paper 7
Date: April 26, 2024

UNITED STATES PATENT AND TRADEMARK OFFICE

BEFORE THE PATENT TRIAL AND APPEAL BOARD

CASPER SLEEP INC.,
Petitioner,

v.

WERNER MEDIA PARTNERS, LLC,
Patent Owner.

IPR2024-00474
Patent 10,842,301 B2

Before BARRY L. GROSSMAN, JASON W. MELVIN, and RYAN H. FLAX, *Administrative Patent Judges*.

FLAX, *Administrative Patent Judge*.

DECISION
Granting Institution of *Inter Partes* Review
35 U.S.C. § 314

I. INTRODUCTION

Werner Media Partners LLC ("Patent Owner") is the owner of U.S. Patent 10,842,301 B2 (Ex. 1001, "the '301 patent"). Paper 5, 1. On January 18, 2024, Casper Sleep Inc. ("Petitioner") filed a Petition for *inter partes* review challenging the patentability of claims 1 and 2 of the '301 patent (all claims). Paper 2, 1 ("Pet."). On February 8, 2024, Patent Owner filed an express waiver of a preliminary response to the Petition. Paper 6.

Under 37 C.F.R. § 42.4(a), we have authority to determine whether to institute trial in an *inter partes* review. We may institute an *inter partes* review if the information presented in the petition filed under 35 U.S.C. § 311, and any preliminary response filed under § 313, shows that there is a reasonable likelihood that Petitioner would prevail with respect to at least one of the claims challenged in the petition. 35 U.S.C. § 314.

After reviewing the parties' submissions in view of the preliminary record,[1] we conclude that Petitioner demonstrates a reasonable likelihood it would prevail in showing that at least one challenged claim of the '301 patent is unpatentable under the presented grounds. *See* Pet. Therefore, we grant institution of *inter partes* review. Our reasoning is discussed below.

---

[1] We note that some, but not all, of the evidentiary exhibits filed by Petitioner include electronically recognizable text that can be searched and copied. To clarify the Board's expectations, all evidence submitted as a PDF should be OCRed and have electronically recognizable text, which can be searched and copied. Exhibits should be cited by exhibit number rather than some other name. It is also preferred that, when filing evidentiary exhibits, they are given a short, descriptive name in addition to the number (Petitioner has done so). Moreover, all briefing should include page numbering and witness testimony in declarations should include paragraph numbering. Submissions not meeting these expectations may be refused.

A. REAL PARTIES-IN-INTEREST

Petitioner states, "the real party-in-interest is Petitioner, Casper Sleep Inc." Pet. 77. Patent Owner states, "the real party-in-interest is Patent Owner, Werner Media Partners LLC." Paper 5, 1.

B. RELATED MATTERS

Petitioner states that "the [90/015,]251 Reexam [i]s a possible related matter (to the extent that the '251 Reexam is a still an active proceeding)." Pet. 77. Patent Owner identifies this same reexamination proceeding, which it identifies as "closed," as possibly related. Paper 5, 1.

C. THE '301 PATENT AND RELEVANT BACKGROUND

The '301 patent, titled "COOLING PILLOW," issued on November 24, 2020, from U.S. Application 15/719,473, which was filed on September 28, 2017. Ex. 1001, codes (10), (45), (21), (22). The '301 patent indicates priority to provisional application 61/367,840, filed on July 28, 2016. *Id.* at code (60). However, the U.S. Patent and Trademark Office has found that the '301 patent's claims are entitled to only their actual filing date (i.e., September 28, 2017). *See* Ex. 1005, 133; *see also* Pet. 7–8.

The '301 patent indicates its invention relates to:

> A cooling pillow generates a gust of cooled air when compressed. A solid, resilient, compressible foam block forms a core of the cooling pillow. A phase change material layer adhered to a surface of the foam block. Holes can be formed in the foam block to enhance the feel of the pillow and to improve the speed at which air is displaced when the cooling pillow is compressed. A pillow protector encloses of lightweight breathable material encloses the foam block. The pillow protector prevents the foam block and cooling layer from being abraded during insertion and removal from a pillow case. The pillow case encloses the pillow protector, which in tour holds the foam block and cooling layer. The pillow case has a

> breathable surface. The breathable surface is oriented to overly the cooling layer. A performance material can be used to form the breathable surface. To use the cooling pillow, the cooling pillow is oriented with the cooling layer and the breathable surface facing upward. The user then rests his or her head on the top of the pillow and compresses the cooling pillow with the weight of his or her head. As the pillow compresses, air is displaced and is cooled by the phase change material in the cooling layer. The result is a gust of cooled air against the user's head and neck.

Ex. 1001, Abstract.

Such a cooling pillow is illustrated, for example, at Figure 9, which we reproduce below:

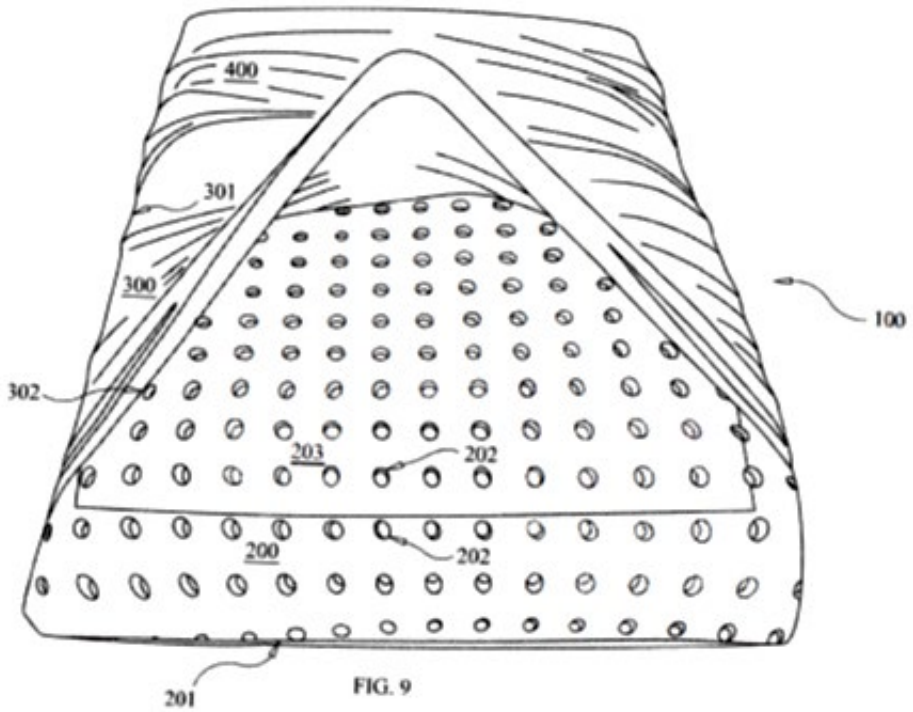

FIG. 9

The '301 patent states that "FIG. 9 is a left, top perspective view of the cooling pillow." *Id.* at 7:47–48. Figure 9 shows cooling pillow 100 having

foam block 200, holes 202, cooling layer 203, pillow protector 300 with opening 302, and pillow cover 400. *Id.* at 7:63–11:12.

The claims of the '301 patent, which are set forth below, are directed to "[a] process for manufacturing bedding," e.g., a pillow, and the patent describes such a process, in its entirety, as follows:

> A preferred embodiment of a process for making a cooling pillow includes the following steps. A conventional mixture of materials for forming a solid, resilient, compressible polyurethane foam is prepared. Before pouring the mixture into the mold, a mold releasing agent is sprayed on the surface of the mold. Next, the mixture is poured into a mold. The mold has the shape of the desired pillow. A preferred size pillow is 41 cm by 61 cm by 14 cm. Next, the mold is heated to 51.7° C. The temperature of the mold is held at 51.7° C. for at least ten minutes and no more than twelve minutes. After the time expires, a block of solid, resilient, compressible polyurethane that is shaped like the mold is removed from the mold.
>
> The foam block is "cracked" twice to improve the feel of the pillow. To crack the pillow, the pillow is run between a set of rollers.
>
> Holes are formed in the foam block according to the following steps. First the foam block is compressed by pressing the top surface of the foam block toward the bottom surface. Next, an array of punches are pressed against the top surface of the compressed pillow to form holes that transverse the foam block from the top surface to the bottom surface. The resulting holes will have a frustoconical shape. The holes have a diameter of one centimeter at the top surface. The holes have a diameter of 0.6 cm at the bottom surface. The holes are formed in a repeating rectangular pattern in which the holes are center spaced 2.5 cm apart from each other.
>
> The phase change material is purchased in a microencapsulated state. The preferred phase change material is sold under the trademark ENFINIT® 28 PCM. The PCM is mixed with a batch of the above-described polyurethane

> material. The weight ratio of microencapsulated PCM to polyurethane is 2:3-3:7. The PCM-polyurethane mixture is applied in two coats to the top surface of the foam block. Each coat is cured by reheating the painted foam block to 51.6° C. for ten to twelve minutes. The resulting cooling layer is between one and two millimeters (1-2 mm) thick.
>
> To complete the cooling pillow, the foam block with cooling layer is placed within a pillow protector. The pillow protector is stitched close. The pillow protector, which houses the foam block with cooling layer, is inserted into the pillow case. When the pillow protector is inserted, the top surface of the foam block, on which the cooling layer is applied, is oriented to underlie the uniform side of the pillow cover.
>
> The process for making the cooling pillow is conducted under standard laboratory conditions unless otherwise specified.

Id. at 11:13–12:9, 12:36.

The '301 patent concludes with two independent claims, which are reproduced below (Petitioner's sub-numbering included):

> 1. A process for manufacturing bedding, which comprises:
>
> [a] providing a solid, resilient, compressible foam block, said block having a surface;
>
> [b] applying phase change material to said surface;
>
> [c] forming a hole into said block and through said surface; and
>
> [d] cracking said block.
>
> 2. A process for manufacturing bedding, which comprises:
>
> [a] providing a solid, resilient, compressible foam block, said block having a surface;
>
> [b] applying phase change material to said surface;
>
> [c] forming a hole into said block and through said surface;

> [d] compressing said block by pressing on said surface before the forming of the hole; and
>
> [e] performing the forming of the hole while said block is compressed.

Ex. 1001, 12:36–51.

D. PETITIONER'S ASSERTED GROUNDS FOR UNPATENTABILITY

Petitioner asserts four grounds for unpatentability of the challenged claims, as follows:

Ground	Claims Challenged	35 U.S.C. §[2]	Reference(s)/Basis
1	1, 2	103	Lievestro,[3] Schneider[4]
2	1, 2	103	Crawford,[5] Lievestro
3	1, 2	103	Ohta,[6] Schneider
4	1, 2	103	Ohta, Crawford

Id. In support of these grounds for unpatentability, Petitioner submits, *inter alia*, the Declaration of David M. Brienza, PhD (Ex. 1006). At this stage of the proceeding there is no dispute that Dr. Brienza is competent to testify as to the subject matter of his declaration. *See also* Ex. 1006 ¶¶ 4–12, 23–25

---

[2] The earliest possible filing date of the '301 patent appears to be its actual filing date of September 28, 2017, which is after the relevant AIA revisions to the Patent Act took effect on March 16, 2013. 35 U.S.C. § 100 (note); *see* Ex. 1001, code (22); Ex. 1005, 133 (Reexam Examiner comments regarding priority). Therefore, AIA § 103 applies.

[3] NL 1020305, registered Apr. 4, 2002 (Netherlands Registration). Ex. 1012; *see also* Ex. 1013 ("Lievestro," English translation).

[4] WO 2016/090258 A1, published June 9, 2016. Ex. 1010 ("Schneider").

[5] US 2014/0141233 A1, published May 22, 2014. Ex. 1011 ("Crawford").

[6] JP 4817757 B2, issued Nov. 16, 2011. Ex. 1008; *see also* Ex. 1009 ("Ohta," English translation).

(witness's background and experience); Ex. 1007 (witness's CV). Patent Owner has, as yet, not submitted any evidence.

II. DISCUSSION

A. LEGAL STANDARDS

"In an [*inter partes* review], the petitioner has the burden from the onset to show with particularity why the patent it challenges is unpatentable." *Harmonic Inc. v. Avid Tech., Inc.*, 815 F.3d 1356, 1363 (Fed. Cir. 2016) (citing 35 U.S.C. § 312(a)(3) (requiring *inter partes* review petitions to identify "with particularity . . . the evidence that supports the grounds for the challenge to each claim")). This burden of persuasion never shifts to Patent Owner. *See Dynamic Drinkware, LLC v. Nat'l Graphics, Inc.*, 800 F.3d 1375, 1378 (Fed. Cir. 2015) (discussing the burden of proof in *inter partes* review).

An *inter partes* review may be instituted if the information presented by a petitioner in the petition, in view of the patent owner's preliminary response and the preliminary record, shows that there is a reasonable likelihood that the petitioner would prevail with respect to at least one of the claims challenged in the petition. 35 U.S.C. § 314.

The Supreme Court in *KSR International Co. v. Teleflex Inc.*, 550 U.S. 398 (2007), reaffirmed the framework for determining obviousness set forth in *Graham v. John Deere Co.*, 383 U.S. 1 (1966). The *KSR* Court summarized the four factual inquiries set forth in *Graham* (383 U.S. at 17–18) that are applied in determining whether a claim is unpatentable as obvious under 35 U.S.C. § 103(a) as follows: (1) determining the scope and content of the prior art; (2) ascertaining the differences between the prior art

and the claims at issue; (3) resolving the level of ordinary skill in the art;[7] and (4) considering objective evidence indicating obviousness or non-obviousness.[8] *KSR*, 550 U.S. at 406.

"The combination of familiar elements according to known methods is likely to be obvious when it does no more than yield predictable results." *Id.* at 416. "[W]hen the question is whether a patent claiming the combination of elements of prior art is obvious," the answer depends on "whether the improvement is more than the predictable use of prior art elements according to their established functions." *Id.* at 417.

B. ORDINARY LEVEL OF SKILL IN THE ART

Petitioner contends:

> a POSITA,[9] from the timeframe of the invention of the '301 Patent (or around the mid-2016 to fall-2017 period) in the field of foam support surface and cushioning technology would have at least a bachelor's degree in engineering and several years of experience designing foam support surfaces, cushioning products, or an equivalent level of education and experience. A POSITA would have knowledge of the factors pertaining to the interaction between the human body and cushioning products used for bedding or similar applications. A POSITA would be familiar with the materials used in the production of cushioning products used for bedding. A POSITA would be familiar with manufacturing processes used for producing cushioning products used for bedding or similar applications. (Exhibit 1006, Brienza Decl., ¶¶ 23–25). Finally, a POSITA would understand that the processes in the '301 Patent directed to

---

[7] *See infra* Section II.B.

[8] At this stage of the proceeding, there is no evidence of objective indicia of obviousness or non-obviousness.

[9] Petitioner uses the acronym POSITA to reference the person of ordinary skill in the art.

> pillows may be used to fabricate other foam bedding products such as mattresses. (Exhibit 1006, Brienza Decl., ¶ 28).

Pet. 8–9 (citing Ex. 1006 ¶¶ 23–25, 28).

At this stage of the proceeding, we accept and use Petitioner's proposed and unopposed definition of the ordinarily skilled artisan. It appears that Petitioner's proposed definition comports with the level of skill in the art reflected in the prior art of record and the '301 patent, itself. *See Okajima v. Bourdeau*, 261 F.3d 1350, 1355 (Fed. Cir. 2001) ("the prior art itself [may] reflect[] an appropriate level" as evidence of the ordinary level of skill in the art) (quoting *Litton Indus. Prods., Inc. v. Solid State Sys. Corp.*, 755 F.2d 158, 163 (Fed. Cir. 1985)).

C. CLAIM CONSTRUCTION

The Board interprets claim terms in an *inter partes* review using the same claim construction standard that is used to construe patent claims in a civil action in federal district court. 37 C.F.R. § 42.100(b). In construing claims, district courts and the Board here, by default, give claim terms their ordinary and customary meaning, which is "the meaning that the term would have to a person of ordinary skill in the art in question at the time of the invention." *Phillips v. AWH Corp.*, 415 F.3d 1303, 1312–13 (Fed. Cir. 2005) (en banc).

Should claim terms require express construction, sources for claim interpretation include "the words of the claims themselves, the remainder of the specification, the prosecution history [i.e., the intrinsic evidence], and extrinsic evidence concerning relevant scientific principles, the meaning of technical terms, and the state of the art." *Id.* at 1314 (quoting *Innova/Pure Water, Inc. v. Safari Water Filtration Sys., Inc.*, 381 F.3d 1111, 1116 (Fed. Cir. 2004)). "[T]he claims themselves [may] provide substantial guidance as

to the meaning of particular claim terms." *Id.* However, the claims "do not stand alone," but are part of "'a fully integrated written instrument' . . . consisting principally of a specification that concludes with the claims," and, therefore, the claims are "read in view of the specification." *Id.* at 1315 (quoting *Markman v. Westview Instruments, Inc.*, 52 F.3d 967, 978–79 (Fed. Cir. 1995) (en banc)). Any special definition for a claim term must be set forth in the specification "with reasonable clarity, deliberateness, and precision." *In re Paulsen*, 30 F.3d 1475, 1480 (Fed. Cir. 1994). Without such a special definition, however, limitations may not be read from the specification into the claims. *In re Van Geuns*, 988 F.2d 1181, 1184 (Fed. Cir. 1993).

"[W]e need only construe terms 'that are in controversy, and only to the extent necessary to resolve the controversy.'" *Nidec Motor Corp. v. Zhongshan Broad Ocean Motor Co.*, 868 F.3d 1013, 1017 (Fed. Cir. 2017) (quoting *Vivid Techs., Inc. v. Am. Sci. & Eng'g, Inc.*, 200 F.3d 795, 803 (Fed. Cir. 1999)).

Our claim construction positions herein are preliminary. Further argument by the parties is permitted.

Petitioner asserts that the claim language "bedding," "phase change material," "solid . . . foam block," "compressed," "compressing," "compressible," "resilient . . . foam block," and "cracking said block," which appear in claims 1 and 2, should be expressly construed for this proceeding. Pet. 9–18. Petitioner states that, "except for the claim term 'phase change material' (claims 1 and 2), all the other terms should be construed in accordance with their plain and ordinary meanings." *Id.* at 11. However,

Petitioner asserts certain meanings for all these listed claim terms, as we discuss below.

Patent Owner has yet to weigh in on claim construction.

1. "bedding"

The term "bedding" is recited in each of the claims' preambles, which Petitioner asserts are not limiting. Pet. 10. Petitioner asserts that "bedding" means *an item used for sleeping or resting*. *Id.* (citing Ex. 1006 ¶ 42; Ex. 1001, 1:30–31, 2:50–52).

At this stage of the proceeding we find this term is readily understandable on its face and do not find it necessary to expressly interpret this claim language.

2. "phase change material"

The language "phase change material" is recited in claims 1 and 2, and Petitioner asserts it means *a substance with a high heat of fusion which, melting and solidifying at a certain temperature, is capable of storing and releasing large amounts of energy*. Pet. 11 (citing Ex. 1006 ¶ 44; Ex. 1001, 2:11–14).

The '301 patent's Specification states:

> A phase-change material (PCM) is a substance that has a high heat of fusion and that is capable of storing and releasing large amounts of energy by melting and solidifying at certain temperatures. Heat is absorbed or released when the material changes from solid to liquid and vice versa; thus, PCMs are classified as latent heat storage (LHS) units.

Ex. 1001, 2:11–17; *see also id.* at 4:55–60 (substantially similar statement). The Specification explains the functioning of a PCM as follows:

> Initially, solid-liquid PCMs behave like sensible heat storage (SHS) materials; their temperature rises as they absorb heat. Unlike conventional SHS materials, however, when

> PCMs reach the temperature at which they change phase (their melting temperature) they absorb large amounts of heat at an almost constant temperature. The PCM continues to absorb heat without a significant rise in temperature until all the material is transformed to the liquid phase. When the ambient temperature around a liquid material falls, the PCM solidifies, releasing its stored latent heat. Within the human comfort range between 20-30° C., some PCMs will store five to fourteen times (5-14x) more heat per unit volume than conventional storage materials.

Id. at 4:65–5:10.

For the purposes of this Decision, we adopt the definition of PCM provided by the Specification, which is explicit and appears to comport with the definition proposed by Petitioner. We interpret the claim term "phase change material" to mean *a substance that has a high heat of fusion and that is capable of storing and releasing large amounts of energy by melting and solidifying at certain temperatures, where heat is absorbed or released when the material changes from solid to liquid and vice versa, such that PCMs are latent heat storage units*. *See id.* at 2:11–17, 4:55–60.

3. "solid . . . foam block"

The terms "solid" and "foam block," and the phase "solid . . . foam block" are recited in claims 1 and 2. Petitioner asserts that "solid" should be interpreted according to its "plain and ordinary meaning," which is "tending to keep its form rather than to flow or spread out like a liquid or gas." Pet. 11–13 (citing Ex. 1014, 1364; Ex. 1001, 3:15–33, 11:14–25; Ex. 1006 ¶ 45) (alteration in original, emphasis omitted). Further, Petitioner asserts that "solid . . . foam block" should be understood to mean a "piece of foam that tends to keep its form." *Id.* at 13 (alternation in original, emphasis original).

At this stage of the proceeding we find this term is readily understandable on its face and do not find it necessary to expressly interpret this claim language.

4. "compressed"

The term "compressed" is recited in claim 2. Petitioner asserts that "compressed" has its plain and ordinary meaning, which is "pressed together, made more compact by pressure." Pet. 13–14 (citing Ex. 1014, 300; Ex. 1001, 2:60–64; Ex. 1006 ¶ 46) (emphasis omitted). Petitioner asserts that "compressed" should be interpreted to mean "pressed together, made more compact by pressure." *Id.* at 14 (emphasis omitted).

The Specification of the '301 patent expressly defines the term "compressed" as "staying at a constant, compressed volume." Ex. 1001, 2:62–64. For the purposes of this Decision, we adopt this definition of "compressed" explicitly provided by the Specification.

5. "compressing"

The term "compressing" is recited in claim 2. Petitioner asserts that "compressing" has its plain and ordinary meaning, which is "making more compact by or as by pressure." Pet. 13–14 (citing Ex. 1001, 11:60–64; Ex. 1006 ¶ 46) (emphasis omitted). Petitioner asserts that "compressing" should be interpreted to mean "making more compact by pressure." *Id.* (emphasis omitted).

The Specification of the '301 patent expressly defines the term "compressing" as "while being reduced volume, as contrasted to 'compressed', which means staying at a constant, compressed volume." Ex. 1001, 2:62–64. For the purposes of this Decision, we adopt this definition of "compressing" explicitly provided by the Specification.

6. "compressible"

The term "compressible" is recited by claims 1 and 2. Petitioner asserts that "compressible" has its plain and ordinary meaning, which is "able to be pressed together, made more compact by pressure." Pet. 13–14 (citing Ex. 1001, 11:60–64; Ex. 1006 ¶ 46) (emphasis omitted). Petitioner asserts that "compressible" should be interpreted to mean "able to be pressed together, made more compact by pressure." *Id.* (emphasis omitted).

At this stage of the proceeding we find this term is readily understandable on its face and do not find it necessary to expressly interpret this claim language.

7. "resilient . . . foam block"

The terms "resilient" and "foam block," and the phrase "resilient . . . foam block" appear in claims 1 and 2. Petitioner asserts "resilient" has its plain and ordinary meaning, which is "bouncing or springing back into shape, position, etc. after being stretched, bent, or esp. compressed." Pet. 14–15 (citing Ex. 1014, 1220; Ex. 1001, 3:12–14, 4:33–39; Ex. 1006 ¶ 47) (alteration in original, emphasis omitted). Petitioner asserts that the phrase "resilient . . . foam block" should be interpreted to mean "a foam block that springs back to its uncompressed shape after being compressed." *Id.* at 15 (alteration in original, emphasis omitted).

At this stage of the proceeding we find that this term is readily understandable on its face and do not find it necessary to expressly interpret this claim language.

8. "cracking said block"

The phrase "cracking said block" is recited in claim 1. Petitioner asserts that "cracking" is used according to its plain and ordinary meaning,

which is "to break or split, usually without complete separation of parts." Pet. 15–17 (citing Ex. 1014, 337; Ex. 1001, 3:39–50, 5:17–23, 11:26–28; Ex. 1006 ¶ 48) (emphasis omitted). Petitioner asserts that "cracking said block" should be interpreted to mean "opening (breaking) some of the foam block's closed cells, such as by compression, without complete separation of the foam block." *Id.* at 16–17 (emphasis omitted).

We find that the Specification of the '301 patent describes that "cracking" is a term of art in the field of foam bedding, stating:

> Cracking a foam block has been found to enhance the comfort and feel in bedding. Cracking is a term for processing a foam block with a roller press. A block of solid, resilient, compressible foam is passed through a roller press twice. While a foam block that has been rolled once has improved compression and resilience characteristics, passing the foam block through the roller twice provides optimal characteristics. The roller press opens some of the closed cells that make up the foam block. A foam block that has been cracked has a compressibility and resilience that allows the resulting pillow to be usable by back, side, and stomach sleepers.

Ex. 1001, 3:39–50. The Specification also states, as directed to an embodiment of the invention: "The foam block is 'cracked' twice to improve the feel of the pillow. To crack the pillow, the pillow is run between a set of rollers." *Id.* at 11:26–28.

Therefore, consistent with the Specification, we interpret "cracking said block" to mean *the block is passed through a roller to open some of the closed cells that make up the foam block.*

9. Summary on Claim Construction

At this stage of the proceeding, we expressly construe only the claim terms noted above, that is, "phase change material," "compressed," "compressing," and "cracking said block." We determine that no other

express construction of any claim term is necessary for purposes of rendering this Institution Decision. *See Nidec Motor Corp.*, 868 F.3d at 1017.

If either party intends to further argue claim construction at trial, they should do so in a clearly designated section of their briefing so as to expressly identify such arguments. *See, e.g.*, 37 C.F.R. § 42.104(b)(3) (content of petition); *see also* Board's Consolidated Trial Practice Guide (CTPG), 84 Fed. Reg. 64,280, at 46, 48–45 (Nov. 2019) (available at https://www.uspto.gov/TrialPracticeGuideConsolidated). Claim construction arguments should not be relegated to patentability arguments on the facts.

D. PETITIONER'S ASSERTED PRIOR ART

1. Lievestro (Ex. 1013—we cite the English translation)

Lievestro, titled "Device and method for making holes in deformable foam blocks," is a Netherlands Industrial Property Registration that issued on December 12, 2003. Ex. 1013, codes (19), (45), (54). There is currently no dispute that Lievestro is prior art.

Lievestro discloses that its invention relates to a:

> Device for creating holes in deformable foam blocks such as mattress bodies, wherein the device is equipped with a rotatable punch-roll body (3) designed to compress the blocks (1) and thereby punch holes (2) in the blocks (1). The invention further relates to a method for creating holes in deformable foam blocks, particularly mattresses, wherein the foam blocks (1) are compressed by a rotating punch-roll body (3), said punch-roll body being configured to punch holes (2) in the blocks (1) during the compression of the blocks (1).

Id. at Abstract.

Figure 4 illustrates such a device and its use; we reproduce the figure below:

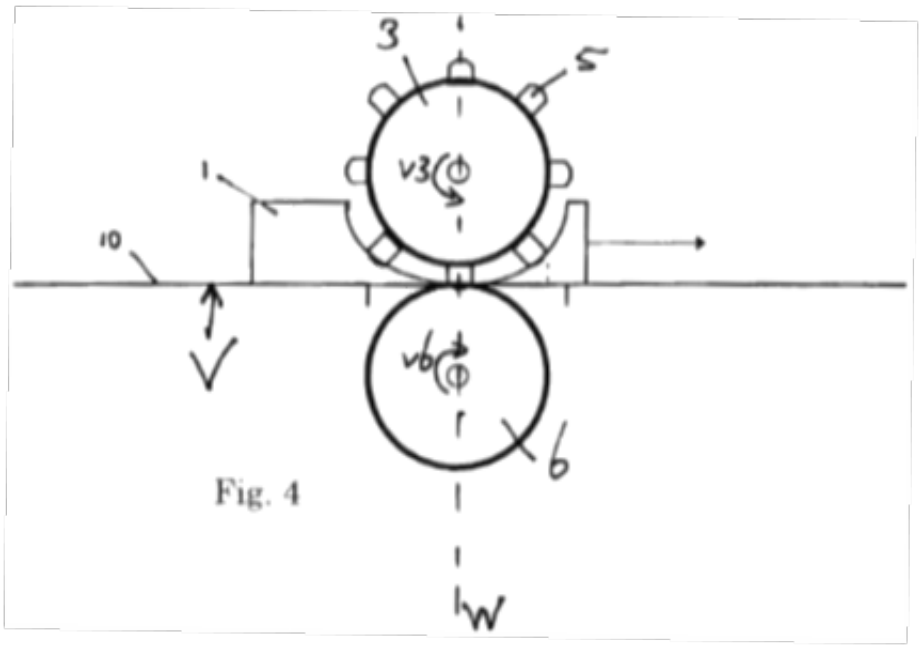

Id. at 12. "Figure 4 illustrates a second step of creating holes in a foam block," and shows foam block 1, die-roll body 3 having punching sleeves 5, counter-punching body 6 positioned opposite die-roll body 3, which cooperates with die-roll body 3 to compress block 1 and punch holes 2 (not numbered in the figure). *Id.* at 5. The figure shows foam block 1 on block feeder 10 and part-way between die-roll body 3 and counter-punching body 6, which are rotating v3, v6 as the foam block 1 passes between them (direction arrow). *Id.* at 5–6. Lievestro states that "cutting edges 7 [of each punching sleeve 5] are designed in such a way that they smoothly punch the holes 2 in the blocks when the blocks 1 are compressed between the die-roll body 3 and the counter-punching body 6." *Id.*

Lievestro states that "[t]he foam blocks 1 can be intended, for example, for making mattresses, heat-insulating and/or sound-insulating panels. The foam blocks can consist of compressed foam flakes made of a plastic foam." *Id.* at 8.

2. Schneider (Ex. 1010)

Schneider, titled "WASHABLE MATTRESS ASSEMBLY," is a PCT application published on June 9, 2016. Ex. 1010, codes (43), (54). There is currently no dispute that Schneider is prior art.

Schneider states that its invention relates to:

> An encasement to enclose a mattress base includes a base panel with side panels extendable from the base panel. A first fastener extends around the side panels, and a first panel is fastenable to the side panels by the first fastener to define a first enclosure. The encasement also includes absorbent foam (e.g., resilient or viscoelastic foam, which may be reticulated and/or attached to a substrate). A second fastener also extends around the side panels, and a second panel is fastenable to the side panels by the second fastener to define a second enclosure to enclose the absorbent foam. The second panel can be constructed from a breathable and at least substantially waterproof material. The absorbent foam can be configured to be received in a front-loading washing machine (e.g., including multiple foam panels arranged in layers).

Id. at Abstract.

Schneider discloses that such a mattress may have several foam layers and that "[o]ne or more of the foam panels 128 can be constructed using a viscoelastic memory foam, which can be reticulated." *Id.* ¶ 18. Schneider further discloses that,

> [i]n some embodiments, the washable mattress comprises a microencapsulated phase change material. For instance, a second eight and one-quarter centimeter (8.25 cm) or three and one-quarter inch (3.25") removable layer of memory foam can

> be coated with a layer of phase change gel material. This phase change gel material may be similar to the phase change gel material described in International Patent Application Number WO2011/107849, which is incorporated herein by reference. The phase change gel comprises extremely small capsules (typically five (5) to forty (40) microns for use in foam production) that permanently contain phase change materials (PCMs) and allow the PCM to absorb thermal energy when exposed to heat. Test results demonstrate the ability of Phase Change Gel to provide significant cooling benefits when applied to flexible polyurethane foam.

Id. ¶ 29.

3. Crawford (Ex. 1011)

Crawford, titled "SURFACE INFUSION OF FLEXIBLE CELLULAR FOAMS WITH NOVEL LIQUID GEL MIXTURE," is the May 22, 2014 published version of U.S. Patent Application 14/135,143. Ex. 1011, codes (21), (43), (54). There is currently no dispute that Crawford is prior art.

Crawford states that its invention relates to:

> Compositions and methods for making a novel liquid gel mixture comprising at least one flexible polymer carrier, parachlorobenzotrifluoride, optional thermally-conductive materials, and optional performance-enhancing additives; using the liquid gel mixture for making surface-infused layers on layering substrates; and using combinations of surface-infused gel layer and layering substrate in cushioning foams and mattresses. Layering substrates are surface-infused with a liquid gel mixture and may be compressed to increase the penetration depth of liquid gel mixture into the substrate layer surface. Th[ese] compositions may be used in mattresses, mattress topper pads, pillows, bedding products, furniture upholstery, pet beds, medical cushioning foams, seat cushions and backs, automotive foam, sports cushioning, transportation cushioning, headrests, arm rests, personal protective equipment, toys, and the like.

Id. at Abstract.

Crawford discloses the use of microencapsulated phase change materials (MPCM), where the

> [a]ddition of phase change materials to the liquid gel mixture used for producing surface-infused gel layers allows the construction composite to store or release energy, which is higher than heat absorbed or released by heat capacity of the non-thermally enhanced construction. Heat is stored if the solid phase change material changes to a liquid, and heat is released when the liquid phase change material changes to a solid.

Id. ¶¶ 56, 60. Crawford states that "incorporation of at least one surface-infused gel layer made with a liquid gel mixture and located on, under, or in a cushion foam or mattress will improve heat transfer and provide a cooler and more comfortable sleep." *Id.* ¶ 115. In more than one embodiment, Crawford discloses creating a laminated cushion by applying liquid material thereto and compressing the cushion between rollers. *Id.* ¶¶ 13, 32–33, 38–41, 68–69, 72–76, 78, Figs. 18, 19, 24–27.

4. Ohta (Ex. 1009—we cite the English translation)

Ohta, titled "METHOD FOR THE PRODUCTION OF PERFORATED PILLOWS," is a Japanese Patent that issued on November 16, 2011. Ex. 1009, codes (19), (45), (54). There is currently no dispute that Ohta is prior art.

As claim 1, Ohta recites:

> A method for the production of perforated pillows, said method being characterized by producing perforated pillows by forming small through-holes in foam bodies, producing perforated pillows by forming through-holes in foam bodies, doing so by forming multiple through-holes concurrently through the following steps:

> Polyol (A) with an average hydroxyl value of 90 to 250 mg KOH/g and polyisocyanate (B) are caused to react at an isocyanate index of 60 to 90 in the presence of a foaming agent and a catalyst so as to form a memory-foam body with a rebound resilience of 30% or less and hardness of 80 N or less, said polyol (A) consisting of the following components at the weight ratio of 50:50 to 80:20:
>
> > Polyol (A-1) with a hydroxyl value of 150 to 300 mg KOH/g, with the cardinal number of functional groups being 1.5 to 4.5, and
> >
> > Polyol (A-2) with a hydroxyl value of 30 to 100 mg KOH/g, with the cardinal number of functional groups being 1.5 to 4.5, followed by the steps below:
>
> A compression step, in which the foam body is placed between two press bodies comprising multiple punching holes and is then compressed between the aforementioned two press bodies,
>
> A punching/extrusion step, in which multiple punching blades are driven into the foam body as they are inserted into the punching holes provided in one of the press bodies and move toward the punching holes provided in the other press body so that the aforementioned punching blades punch holes through said foam body situated between the two press bodies while concurrently pushing the punched-out portions out of the aforementioned foam body and extruding them through the aforementioned punching holes provided in the other press body, thus forming through-holes in the aforementioned foam body, and
>
> A compression release step, in which the aforementioned two press bodies are caused to move away from each other to thereby release the compression on the foam body.

Id. at 1–2 (underlining omitted).

As background, Ohta states that "[s]ome foam pillows are made of perforated foam that is pierced with holes to prevent the oppressive, muggy feeling during use." *Id.* ¶ 2. Ohta provides Figure 3 to illustrate its invention for providing holes in a foam pillow; the figure is reproduced below:

Figure 3

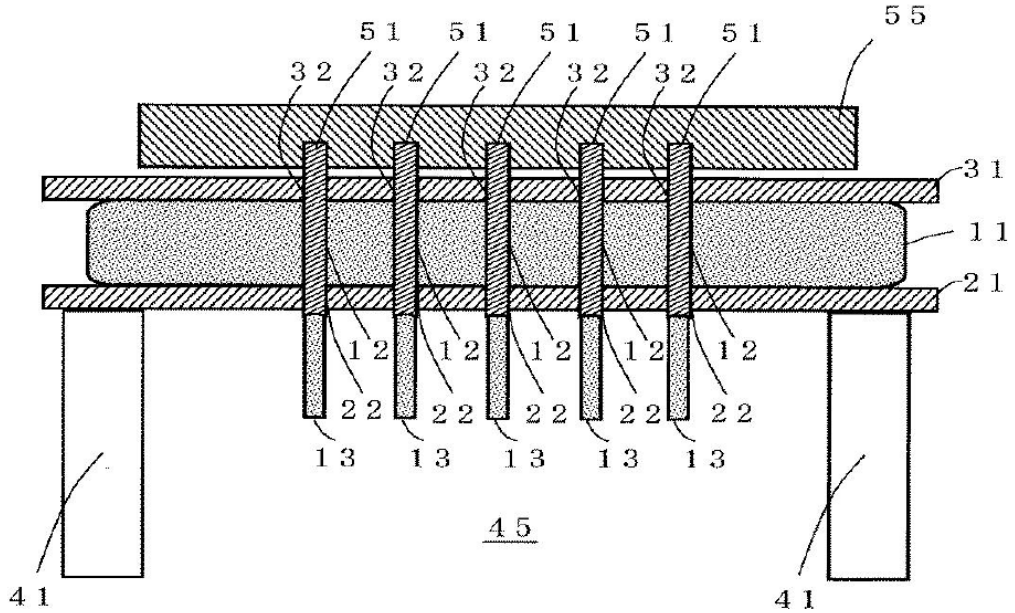

Id. at 20. Figure 3 represents a step of a process and "shows a schematic cross-sectional view of said embodiment in the state in which holes have been punched through the foam body." *Id.* ¶ 45. The figure shows foam body 11 compressed between two press bodies 21, 31, and ascending/descending plate 55 having hole punching blades 51 that have created holes 12 through foam body 11, from its top to its bottom surface. *Id.* ¶¶ 31–34. Subsequently, according to Ohta, ascending/descending plate 55 is lifted, the press bodies 21 and 31 move away from one another, and the

compression of foam body 11 is released and foam body 11 returns to its original shape and size. *Id.* ¶¶ 34–35, Fig. 5.

E. GROUND 1—OBVIOUSNESS OVER LIEVESTRO AND SCHNEIDER

Under Ground 1, Petitioner asserts, at this point without opposition, that the combination of Lievestro and Schneider would have rendered claims 1 and 2 obvious. Pet. 65–68. Regarding claims 1 and 2, Petitioner asserts that Lievestro discloses every limitation "except the step of 'applying phase change material to said surface' of the foam block." *Id.* at 20–29, 65–68 (citing Ex. 1013, Abstract, 2, 3, 5–6, Figs. 3–7; Ex. 1006 ¶¶ 52–59). Regarding including such a phase change material, Petitioner combines Schneider with Lievestro, asserting that Lievestro was concerned with cooling effect, using holes for this purpose, which provided a reason for the ordinarily skilled artisan to look to Schneider's use of PCM for this same purpose. *Id.* at 65–68 (citing Ex. 1006 ¶¶ 86–91). Petitioner asserts that applying Schneider's PCM to Lievestro's similar bedding product would have yielded the predictable result of enhanced cooling effect for a user. *Id.*

Regarding claim 1's preamble, Petitioner asserts it is not limiting, but also that Lievestro discloses a device and method for efficiently making holes in deformable foam blocks, which is a process for manufacturing bedding. *Id.* at 20, 24 (citing Ex. 1013, code (54), 2; Ex. 1006 ¶ 53); *see also id.* at 65–66.

Regarding claim 1's recited "providing a solid, resilient, compressible foam block, said block having a surface," Petitioner asserts that Lievestro discloses, and illustrates at Figures 3, 4, and 7, a solid, deformable foam block with a surface. *Id.* at 21, 25, 65–66 (citing Ex. 1013, 3–6, Figs. 3, 4, 7; Ex. 1006 ¶ 55).

Regarding claim 1's "applying phase change material to said surface" of the foam block, Petitioner acknowledges Lievestro does not disclose it and points to Schneider's disclosure of coating a foam layer of bedding material with PCM for its cooling effect for a user. *Id.* at 26, 63, 65–66 (citing Ex. 1010 ¶ 29; Ex. 1006 ¶¶ 85–88).

Regarding claim 1's recited "forming a hole into said block and through said surface," Petitioner asserts that Lievestro discloses a rotatable punch-roll body compresses foam blocks and punches holes therein. *Id.* at 20–24, 26, 65–66 (citing Ex. 1013, Abstract, 5–6, Figs. 3, 4, 7; Ex. 1006 ¶¶ 52, 55).

Regarding claim 1's recited "cracking said block," Petitioner asserts that Lievestro discloses crushing the foam block by compression during the hole-punching process, which breaks cell walls within the foam and enhances comfort during use, which Petitioner asserts is cracking. *Id.* at 20–21, 26, 65–66 (citing Ex. 1013, 2, 3; Ex. 1006 ¶ 54).

Turning to claim 2, it is very similar to claim 1 (where it recites similar steps, Petitioner asserts the same prior art disclosure applies), but omits "cracking" the foam block, and adds that the foam block is compressed before forming the holes therein and is compressed while forming the holes therein. Regarding the sequence of compression and hole forming steps, Petitioner asserts that Lievestro has a "compression and punching process" where rollers first begin compressing the foam block and, when the foam is fully compressed, hole-punchers on the rollers form a hole in the foam block through its surface, and then the foam block moves past the rollers and decompresses. *Id.* at 20–29, 66–68 (citing Ex. 1013, 2–6, Figs. 3–7; Ex. 1006 ¶¶ 55–57, 59, 89–91).

At this stage of the proceeding, none of the above assertions of fact by Petitioner are contested by Patent Owner.

We find that, on the current record, Petitioner has sufficiently mapped the limitations/steps of the claims to the disclosures of Lievestro and Schneider, identified a reason with rational underpinnings why the ordinarily skilled artisan would have combined the teachings of the references, and identified that there would have been a reasonable expectation of success.

Based on the evidence presented at this stage of the proceeding, Petitioner has shown under Ground 1 that there is reasonable likelihood that at least one of the '301 patent's claims would have been obvious over Lievestro and Schneider.

F. PETITIONER'S GROUNDS 2–4

Petitioner also presents Grounds 2, 3, and 4, alleging obviousness of claims 1 and 2 over Crawford and Lievestro (Ground 2), Ohta and Schneider (Ground 3), and Ohta and Crawford (Ground 4). Pet. 29–62, 68–76 (citing, *inter alia*, Ex. 1009 ¶¶ 1, 2, 4–6, 15, 18, 31, 33–35, Figs. 1–6; Ex. 1010 ¶ 29; Ex. 1011, Abstract, ¶¶ 2, 8, 56, 60–62, 72, 108, 115, Figs. 16, 17, 19, 27, claim 43; Ex. 1013, Abstract, 2, 3, 5–6, Figs. 3–7; Ex. 1006 ¶¶ 61–70, 74–85, 92–109). In general, Petitioner relies on the teachings of Lievestro and Schneider as discussed above for Ground 1; relies on Ohta as teaching similar steps as Lievestro (combining it with Schneider or Crawford for their PCM use); and relies on Crawford for teaching compressing a foam cushion and similar use of PCM as Schneider (combining with Lievestro or Ohta for hole-forming). *Id.*

As noted, Patent owner does not yet present any arguments on the merits of Petitioner's challenges.

Because we determine that Ground 1, as discussed above, warrants institution, we do not address the full merits of these additional grounds at this stage, but they are included in the instituted review. *See* 37 C.F.R. § 42.108(a). We note, however, that Petitioner's reasoning and assertions of facts on Grounds 2–4 appear to have merit, similar to Ground 1. These grounds will be addressed in the final decision in this proceeding.

III. CONCLUSION

On the record before us at this stage in the proceeding, Petitioner has demonstrated a reasonable likelihood of showing at trial that at least one challenged claim of the '301 patent is unpatentable under at least one ground. Accordingly, we institute an *inter partes* review of the challenged claims of the '301 patent on all grounds alleged by Petitioner. This decision does not reflect a final determination on the patentability of the claims.

ORDER

Accordingly, it is hereby:

ORDERED that, pursuant to 35 U.S.C. § 314, an *inter partes* review of claims 1 and 2 of the '301 patent, in accordance with each ground of challenge in the Petition, is hereby *instituted*; and

FURTHER ORDERED that, pursuant to 35 U.S.C. § 314(c) and 37 C.F.R. § 42.4(b), *inter partes* review of the '301 patent will commence on the entry date of this Decision, and notice is hereby given of the institution of a trial.

For PETITIONER:

Mark I. Koffsky
Gary Serbin
KOFFSKY SCHWALB LLC
mkoffsky@koffskyschwalb.com
gserbin@koffskyschwalb.com

For PATENT OWNER:

Greg M. Popowitz
ASSOULINE & BERLOWE, P.A.
gmp@assoulineberlowe.com

Loren D. Pearson
LOREN DONALD PEARSON, P.A.
ldp@pearsonip.com