UNITED STATES PATENT AND TRADEMARK OFFICE

BEFORE THE PATENT TRIAL AND APPEAL BOARD

MOTOROLA SOLUTIONS, INC.
Petitioner

v.

STA GROUP LLC
Patent Owner

Inter Partes Review No.: IPR2024-00479
U.S. Patent No. 9,319,852 B2

DECLARATION OF DR. SAYFE KIAEI IN SUPPORT OF PETITION FOR *INTER PARTES* REVIEW OF U.S. PATENT NO. 9,319,852

I hereby declare under penalty of perjury under the laws of the United States of America that the following is true and correct, and that all statements made of my own knowledge are true and that all statements made on information and belief are believed to be true. I understand that willful false statements are punishable by fine or imprisonment or both. *See* 18 U.S.C. § 1004.

Dated: January 30, 2024

Dr. Sayfe Kiaei

ACTIVE\1606866413

TABLE OF CONTENTS

Page

I. Introduction 1
II. Background and Qualifications 3
A. Qualifications 3
B. Materials Reviewed 9
III. Relevant Legal Standards 9
A. Burden of Proof 9
B. Legal Standards for Prior Art 9
C. Person of Ordinary Skill in the Art 10
D. Anticipation 11
E. Obviousness 11
F. Priority/Written Description 16
IV. The ’852 Patent 18
A. Overview of the ’852 Patent 18
B. Priority Date of the Challenged Claims 21
C. Person of Ordinary Skill in the Art 27
D. Claim Construction 28
1. “receiv[e/ing] a first determination from the [IS]/[interoperability server] that the [endpoint]/[initiating device] is not in adherence with capabilities of the predefined floor control mechanism and that a proxy is to be dynamically inserted to connect the [endpoint]/[initiating device] to a virtual talk group, wherein the capabilities comprise quality of service, rules of transmission and trusted endpoint identity.” (claims 1, 8, 12) 29
V. Overview of the Prior Art References 31
A. U.S. Patent Application Publication No.2006/0058007 (“Choksi”) (EX1005) 31
B. U.S. Patent Application Publication No. 2009/0298525 (“the ’525 publication” or “Shaffer”) (EX1016) 35

C. U.S. Patent Application Publication No. 2004/0133683 ("Keller") (EX1024) 35

D. Open Mobile Alliance (OMA) Push to Talk Over Cellular (POC) 37

1. PoC System Description (EX1031) 37

2. PoC Architecture (EX1029) 37

3. PoC Interworking Service (EX1032) 38

E. TR23.979-700 (EX1033) 38

F. TS23.060 (EX1034) 39

G. Chowdhury (EX1035) 39

H. Jin (EX1036) 41

VI. Ground 1: Choksi in View of The Knowledge of A POSITA RENDERS OBVIOUS CLAIMS 1–5 and 8–11 42

A. Motivation to Combine Embodiments within Choksi 42

B. Claim 1 50

1. [1pre] An apparatus comprising a processor, wherein the processor is configured to: 50

2. [1a] identify information related to an endpoint to obtain identified information; and 51

3. [1b] negotiate a communication session with an interoperability server (IS) based in part on at least one of the identified information or a predefined floor control mechanism associated with the IS; and 52

4. [1c] receive a first determination from the IS that the endpoint is not in adherence with capabilities of the predefined floor control mechanism and that a proxy is to be dynamically inserted to connect the endpoint to a virtual talk group, wherein the capabilities comprise quality of service, rules of transmission and trusted endpoint identity. 54

a. "the predefined floor control mechanism" is associated with the IS 55

b. "receive a first determination from the IS that the endpoint is not in adherence with capabilities of

the predefined floor control mechanism . . . wherein the capabilities comprise quality of service, rules of transmission and trusted endpoint identity" 56

c. "receive a first determination from the IS … that a proxy is to be dynamically inserted …" 61

C. Claim 2. The apparatus of claim 1, wherein the processor is further configured to identify media capabilities associated with the endpoint, the media capabilities employed by the IS to dynamically determine if the endpoint should be connected to the virtual talk group via the proxy. 64

D. Claim 3. The apparatus of claim 2, further comprising a transmitter, wherein the transmitter transmits data to the virtual talk group if it is determined that the proxy is not employed to connect the endpoint to the virtual talk group. 67

E. Claim 4. The apparatus of claim 2, further comprising a transmitter, wherein the transmitter transmits data to the proxy over a private channel if it is determined that the proxy is employed to connect the endpoint to the virtual talk group. 69

F. Claim 5. The apparatus of claim 1, wherein the processor is further configured to determine an identity associated with the endpoint, the identity employed by the IS to dynamically determine if the endpoint should be connected to the virtual talk group via the proxy 70

G. Claim 8 72

1. [8pre] A method comprising: 72

2. [8a] initiating communication with a non-compatible communication device; identifying information associated with an initiating device; and 72

3. [8b] negotiating a communication session with an interoperability server (IS) based in part on at least one of the identified information or a predefined floor control mechanism associated with the IS; and 73

4. [8c] receiving a first determination from the IS that the initiating device is not in adherence with capabilities of the predefined floor control mechanism and that a proxy

is to be dynamically inserted to connect the initiating device to a virtual talk group, wherein the capabilities comprise quality of service, rules of transmission and trusted endpoint identity. 73

H. Claim 9. The method of claim 8, wherein the information associated with the initiating device includes at least one of media capability information associated with the initiating device or an identity of the initiating device. 73

I. Claim 10. The method of claim 8, further comprising transmitting media to the proxy over a private network through custom messages if it is evaluated that the proxy is employed. 73

J. Claim 11. The method of claim 8, further comprising, attaching the initiating device directly to the virtual talk group and transmitting media directly to the virtual talk group if the proxy is not employed to attach the initiating device to the virtual talk group. 74

VII. Ground 2: Shaffer In View of Keller and The Knowledge of A POSITA Renders obvious All Challenged claims 75

A. Introduction 75

B. Motivation to Combine Shaffer and Keller 75

C. Motivation to Combine Embodiments of Shaffer 76

D. Claim 1 78

1. [1pre] An apparatus comprising a processor, wherein the processor is configured to: 78

2. [1a] identify information related to an endpoint to obtain identified information; and 80

3. [1b] negotiate a communication session with an interoperability server (IS) based in part on at least one of the identified information or a predefined floor control mechanism associated with the IS; and 81

4. [1c] receive a first determination from the IS that the endpoint is not in adherence with capabilities of the predefined floor control mechanism and that a proxy is to be dynamically inserted to connect the endpoint to a virtual talk group, wherein the capabilities comprise

quality of service, rules of transmission and trusted endpoint identity. 82

a. "receive a first determination from the IS that the endpoint is not in adherence with capabilities of the predefined floor control mechanism . . . wherein the capabilities comprise quality of service, rules of transmission and trusted endpoint identity" 82

b. "receive a first determination from the IS … that a proxy is to be dynamically inserted to connect the endpoint to a virtual talk group".....87

E. Claim 2. The apparatus of claim 1, wherein the processor is further configured to identify media capabilities associated with the endpoint, the media capabilities employed by the IS to dynamically determine if the endpoint should be connected to the virtual talk group via the proxy. 90

F. Claim 3. The apparatus of claim 2, further comprising a transmitter, wherein the transmitter transmits data to the virtual talk group if it is determined that the proxy is not employed to connect the endpoint to the virtual talk group.....91

G. Claim 4. The apparatus of claim 2, further comprising a transmitter, wherein the transmitter transmits data to the proxy over a private channel if it is determined that the proxy is employed to connect the endpoint to the virtual talk group.....92

H. Claim 5. The apparatus of claim 1, wherein the processor is further configured to determine an identity associated with the endpoint, the identity employed by the IS to dynamically determine if the endpoint should be connected to the virtual talk group via the proxy.....93

I. Claim 7. The apparatus of claim 1, wherein the processor is further configured to monitor endpoints directly connected to the virtual talk group and determines that a directly connected endpoint is not conforming with a floor control policy of the virtual talk group. 94

J. Claim 8 95

1. [8pre] A method comprising:.....95

2. [8a] initiating communication with a non-compatible communication device; identifying information associated with an initiating device; and 95

3. [8b] negotiating a communication session with an interoperability server (IS) based in part on at least one of the identified information or a predefined floor control mechanism associated with the IS; and 95

4. [8c] receiving a first determination from the IS that the initiating device is not in adherence with capabilities of the predefined floor control mechanism and that a proxy is to be dynamically inserted to connect the initiating device to a virtual talk group, wherein the capabilities comprise quality of service, rules of transmission and trusted endpoint identity. 96

K. Claim 9. The method of claim 8, wherein the information associated with the initiating device includes at least one of media capability information associated with the initiating device or an identity of the initiating device. 96

L. Claim 10. The method of claim 8, further comprising transmitting media to the proxy over a private network through custom messages if it is evaluated that the proxy is employed. 97

M. Claim 11. The method of claim 8, further comprising, attaching the initiating device directly to the virtual talk group and transmitting media directly to the virtual talk group if the proxy is not employed to attach the initiating device to the virtual talk group. 97

N. Claim 12 98

1. [12pre] An endpoint comprising: 98

2. [12a] a transmitter and a receiver; 98

3. [12b] a user interface; 99

4. [12c] a processor coupled to the user interface, wherein the processor: identifies information related to the endpoint; and 100

5. [12d] negotiates a communication session with an interoperability server based in part on at least one of the identified information or a predefined floor control

mechanism associated with the interoperability server; and 101

6. [12e] receive a first determination from the interoperability server that the endpoint is not in adherence with capabilities of the predefined floor control mechanism and that a proxy is to be dynamically inserted to connect the endpoint to a virtual talk group, wherein the capabilities comprise quality of service, rules of transmission and trusted endpoint identity 101

O. Claim 13. The endpoint of claim 12, wherein the processor identifies media capabilities associated with the endpoint, the media capabilities employed by the interoperability server to dynamically determine if the endpoint should be connected to the virtual talk group via the proxy. 101

P. Claim 14. The endpoint of claim 12, wherein the processor determines an identity associated with the endpoint, the identity employed by the interoperability server to dynamically determine if the endpoint should be connected to a virtual talk group via the proxy 102

Q. Claim 15. The endpoint of claim 12, wherein the processor causes the transmitter to transmit data to the virtual talk group if it is determined that the proxy is not employed to connect the endpoint to the virtual talk group. 102

R. Claim 16. The endpoint of claim 12, wherein the processor causes the transmitter to transmit data to the proxy over a private channel if it is determined that the proxy is employed to connect the endpoint to the virtual talk group. 102

VIII. Ground 3: Chowdhury In View of PoC Interworking Service, PoC System Description, TR 23.979, Jin and The Knowledge of A POSITA Renders obvious Claims 1 to 2 and 9 to 13 103

A. Motivation to Combine Chowdhury with PoC Interworking Service, PoC System Description, and PoC Architecture 103

B. Motivation to Combine Chowdhury, PoC Interworking Service, PoC System Description, and PoC Architecture with TR 23.979 106

C. Motivation to Combine Chowdhury, PoC Interworking Service, PoC System Description, PoC Architecture, and TR 23.979 With Jin 106

D. Claims 1, 8 and 12 107

1. [1pre] An apparatus comprising a processor, wherein the processor is configured to:

   [12pre] An endpoint comprising:

   [12a] a transmitter and a receiver;

   [12b] a user interface;

   [12c] a processor coupled to the user interface, wherein the processor: 107

2. [8pre] A method comprising 111

3. [8a] initiating communication with a non-compatible communication device 111

4. [1a] identify information related to an endpoint to obtain identified information; and

   [8b] identifying information associated with an initiating device;

   [12d] identifies information relating to an endpoint 111

5. [1b] negotiate a communication session with an interoperability server (IS) based in part on at least one of the identified information or a predefined floor control mechanism associated with the IS; and

   [8c] negotiating a communication session with an interoperability server (IS) based in part on at least one of the identified information or a predefined floor control mechanism associated with the IS; and

   [12e] negotiates a communication session with an interoperability server based in part on at least one of the identified information or a predefined floor control

mechanism associated with the interoperability server; and 113

6. [1c] receive a first determination from the IS that the endpoint is not in adherence with capabilities of the predefined floor control mechanism and that a proxy is to be dynamically inserted to connect the endpoint to a virtual talk group, wherein the capabilities comprise quality of service, rules of transmission and trusted endpoint identity.

[8d] receiving a first determination from the IS that the endpoint is not in adherence with capabilities of the predefined floor control mechanism and that a proxy is to be dynamically inserted to connect the endpoint to a virtual talk group, wherein the capabilities comprise quality of service, rules of transmission and trusted endpoint identity.

[12f] receive a first determination from the IS that the endpoint is not in adherence with capabilities of the predefined floor control mechanism and that a proxy is to be dynamically inserted to connect the endpoint to a virtual talk group, wherein the capabilities comprise quality of service, rules of transmission and trusted endpoint identity" 118

a. "a first determination from the IS that the endpoint is not in adherence with capabilities of the predefined floor control mechanism . . . wherein the capabilities comprise quality of service, rules of transmission and trusted endpoint identity" 118

b. "a first determination from the IS … that a proxy is to be dynamically inserted to connect the endpoint to a virtual talk group" 119

c. "receive a first determination from the IS . . ." 120

E. Claim 2. The apparatus of claim 1, wherein the processor is further configured to identify media capabilities associated with the endpoint, the media capabilities employed by the IS to dynamically determine if the endpoint should be connected to

the virtual talk group via the proxy.

Claim 13. The endpoint of claim 12, wherein the processor identifies media capabilities associated with the endpoint, the media capabilities employed by the interoperability server to dynamically determine if the endpoint should be connected to the virtual talk group via the proxy. 124

F. Claim 9. The method of claim 8, wherein the information associated with the initiating device includes at least one of media capability information associated with the initiating device or an identity of the initiating device. 125

G. Claim 10. The method of claim 8, further comprising transmitting media to the proxy over a private network through custom messages if it is evaluated that the proxy is employed. 125

H. Claim 11. The method of claim 8, further comprising, attaching the initiating device directly to the virtual talk group and transmitting media directly to the virtual talk group if the proxy is not employed to attach the initiating device to the virtual talk group. 126

IX. Ground 4: Chowdhury, PoC Interworking Service, PoC System Description, PoC Architecture, TR 23.979, Jin, And TS23.060 Render Obvios claims 4, 5, 14 and 16. 127

A. Claim 4. The apparatus of claim 2, further comprising a transmitter, wherein the transmitter transmits data to the proxy over a private channel if it is determined that the proxy is employed to connect the endpoint to the virtual talk group.

Claim 16. The endpoint of claim 12, wherein the processor causes the transmitter to transmit data to the proxy over a private channel if it is determined that the proxy is employed to connect the endpoint to the virtual talk group.....127

B. Claim 5. The apparatus of claim 1, wherein the processor is further configured to determine an identity associated with the endpoint, the identity employed by the IS to dynamically determine if the endpoint should be connected to the virtual talk group via the proxy.

Claim 14. The endpoint of claim 12, wherein the processor

determines an identity associated with the endpoint, the identity employed by the interoperability server to dynamically determine if the endpoint should be connected to a virtual talk group via the proxy.....128

X. Availability for Cross-Examination 129

XI. Right to Supplement 130

XII. Conclusion 130

INDEX OF EXHIBITS

Exhibit No.	Description	Short-Hand
1001	U.S. Patent No. 9,319,852	"the '852 patent"
1002	Declaration of Dr. Kiaei	
1003	File History of U.S. Patent No. 9,319,852	
1004	U.S. Patent Application No. 14/523,299	"the '299 Application"
1005	U.S. Patent Application Publication No. 2006/0058007	"Choksi"
1006	U.S. Patent Application No. 11/047,897	
1007	U.S. Patent No. 7,359,726	
1008	U.S. Patent Application No. 11/047,892	
1009	U.S. Patent No. 7,359,731	
1010	U.S. Provisional Patent Application No. 60/608,110	
1011	U.S. Provisional Patent Application No. 60/608,113	
1012	U.S. Provisional Patent Application No. 60/608,117	
1013	U.S. Provisional Patent Application No. 60/608,126	
1014	U.S. Provisional Patent Application No. 60/608,131	
1015	U.S. Patent No. 8,892,149	"the '149 patent"
1016	U.S. Patent Application Publication No. 2009/0298525	"Shaffer"
1017	U.S. Patent Application No. 12/127,397	"the '397 Application"
1018	HARRY NEWTON, NEWTON'S TELECOM DICTIONARY (22nd Ed. 2006)	
1019	H.248.1 (2005.09)	
1020	B. Campbell *et al.*, *Session Initiation Protocol (SIP) Extension for Instant Messaging*, RFC 3428 (Dec. 2002)	
1021	RFC 3428 Approved as Proposed Standard (2002)	
1022	DANIEL COLLINS, CARRIER GRADE VOICE OVER IP (2nd ed. 2003)	

Exhibit No.	Description	Short-Hand
1023	N. Greene, et al., *Media Gateway Control Protocol Architecture and Requirements*, RFC 2805 (Apr. 2000)	
1024	U.S. Patent Application Publication No. 2004/0133683	"Keller"
1025	U.S. Patent Application Publication No.2010/0004014	"Coulombe"
1026	U.S. Patent App. Pub. No. 2003/0231639	
1027	U.S. Patent Application Publication No. 2007/0036100	
1028	File History of U.S. Patent No. 8,892,149	
1029	*OMA Push to Talk over Cellular (PoC) – Architecture* V2.0 (OMA-AD-PoC-V2_0) (Oct. 2, 2007)	"PoC Architecture"
1030	*OMA Push to Talk over Cellular 2 Requirements* V2.0 (OMA-RD-PoC-V2_0) (Oct. 2, 2007)	"PoC Requirements"
1031	*OMA PoC System Description* V2.0 (OMA-TS-PoC_System_Description-V2_0) (Oct. 2, 2007)	"PoC System Description"
1032	*OMA PoC Interworking Service* V2.0 (OMA-TS-PoC_Interworking_Service-V2_0) (Oct. 2, 2007)	"PoC Interworking Service"
1033	*3GPP enablers for Open Mobile Alliance (OMA) Push-to-talk over Cellular (PoC) services* (3GPP TR 23.979) V7.0.0 (June 2007)	"TR23.979"
1034	*3GPP General Packet Radio Service (GPRS) Description* (3GPP TS23.060) V8.0.0 (March 2008)	"TS23.060"
1035	U.S. Patent No 7,774,012	"Chowdhury"
1036	U.S. Patent Application Publication No. 2006/0003781	"Jin"
1037	Push to Talk over Cellular (PoC) - Architecture V2.0 (OMA-AD-PoC-V2_0) (February 26, 2008)	

Exhibit No.	Description	Short-Hand
1038	OMA Push to Talk over Cellular 2 Requirements V2.0 (OMA-RD-PoC-V2_0) (April 21, 2008)	
1039	OMA PoC System Description V2.0 (OMA-TS-PoC_System_Description-V2_0) (February 26, 2008)	
1040	OMA PoC Interworking Service V2.0 (OMA-TS-PoC_Interworking_Service-V2_0) (February 26, 2008)	
1041	2008.09.05 - Push to talk over Cellular V2.0	
1042	OMA FTP PoC Public Documents (July 11, 2007), available at https://web.archive.org/web/20070711185720/http://member.openmobilealliance.org/ftp/public_documents/POC/Permanent_documents/	
1043	OMA Release Program and Specifications (October 26, 2007), available at https://web.archive.org/web/20071026121236/http://www.openmobilealliance.org/release_program/index.html	
1044	OMA Push to talk over Cellular Working Group (February 20, 2008), available at https://web.archive.org/web/20080220172844/http://www.openmobilealliance.org/Technical/poc.aspx	
1045	OMA Technical Section - Publicly Available Documents (February 23, 2008), available at https://web.archive.org/web/20080223000148/http://www.openmobilealliance.org/tech/publicmaterial.html	
1046	OMA Publicly Available Documents (March 8, 2008), available at https://web.archive.org/web/20080308082514/http://	

Exhibit No.	Description	Short-Hand
	www.openmobilealliance.org/Technical/PublicMaterial.aspx	
1047	3GPP Specifications Home Page (July 2, 2007), available at https://web.archive.org/web/20070702234758/http://www.3gpp.org/specs/specs.htm	
1048	3GPP specification Release version matrix (July 4, 2007), available at https://web.archive.org/web/20070704004228/http://www.3gpp.org/ftp/Specs/html-info/SpecReleaseMatrix.htm	
1049	3GPP Specification 23.979 (August 3, 2007), available at https://web.archive.org/web/20070803213451/http://www.3gpp.org/ftp/Specs/html-info/23979.htm	
1050	3GPP specification status report (September 17, 2007), available at https://web.archive.org/web/20070917060533/http://www.3gpp.org/ftp/Specs/html-info/status-report.htm	
1051	3GPP Specifications Releases (and phases and stages) (October 20, 2007), available at https://web.archive.org/web/20071020044252/http://www.3gpp.org/specs/releases.htm	
1052	3GPP Specifications Releases (and phases and stages) (March 31, 2008), available at https://web.archive.org/web/20080331005358/http://www.3gpp.org/specs/releases.htm	
1053	3GPP Specification 23.060 (April 21, 2008), available at https://web.archive.org/web/20080421203604/http://www.3gpp.org/FTP/Specs/html-info/23060.htm	
1054	3GPP specification Release version matrix (April 25, 2008), available at https://web.archive.org/web/	

Exhibit No.	Description	Short-Hand
	20080425220025/http://www.3gpp.org/ftp/Specs/html-info/SpecReleaseMatrix.htm	
1055	3GPP specification status report (April 30, 2008), available at https://web.archive.org/web/20080430174910/http://www.3gpp.org:80/ftp/Specs/html-info/status-report.htm	
1056	3GPP Home Page (March 31, 2008), available at https://web.archive.org/web/20080331113619/http://www.3gpp.org/	
1057	2006.01.11 - Motorola Push-To-Talk Over Cellular	
1058	2006.02.22 - PoC Consortium Phase 2 Specifications and Documentation	
1059	2007.12.13 - Motorola Push-To-Talk Over Cellular	
1060	Motorla PoC Solution Brochure (2004)	
1061	Declaration of Madhu Pai	

I. INTRODUCTION

1. I, Dr. Sayfe Kiaei, have been engaged by Motorola Solutions, Inc. as an independent expert in this IPR. I expect to testify concerning the subjects outlined in this report.

2. As part of that engagement, I have been asked to provide analysis and expert opinions on U.S. Patent No. 9,319,852 ("the '852 patent").

3. I am being compensated for the time I have spent on this matter at the rate of $475 per hour. My compensation does not depend in any way upon the outcome of this proceeding.

4. In reaching the conclusions described herein, I have considered the documents and materials identified in the Index of Exhibits that is attached to this report, in addition to any materials cited in this report. My opinions are also based upon my education, training, research, knowledge, and personal and professional experience.

5. Based on my review of the '852 patent and its prosecution history, the other materials I have considered, and my knowledge and experience, my opinions are as follows:

- **Ground 1:** Claims 1 to 5 and 8 to 11 are unpatentable due to obviousness based on U.S. Patent Application Publication No.

2006/0058007 ("Choksi") (EX1005) in view of the knowledge of a POSITA; and

- **Ground 2:** Claims 1 to 5 and 7 to 16 are unpatentable due to obviousness based on U.S. Patent Application Publication No. 2009/0298525 ("Shaffer") (EX1016) and U.S. Patent Application Publication No. 2004/0133683 ("Keller") (EX1024) in view of the knowledge of a POSITA.
- **Ground 3:** Claims 1 to 2 and 9 to 13 are unpatentable due to obviousness based on the combination of U.S. Patent No 7,774,012 ("Chowdhury") (EX1035), PoC Interworking Service (EX1032), PoC System Description (EX1031), TR 23.979 (EX1033), and U.S. Patent Application Publication No. 2006/0003781 ("Jin") (EX1036) in view of the knowledge of a POSITA.
- **Ground 4:** Claims 4, 5, 14, and 16 are unpatentable due to obviousness based on the combination of U.S. Patent No 7,774,012 ("Chowdhury") (EX1035), PoC Interworking Service (EX1032), PoC System Description (EX1031), PoC Architecture (EX1029), TR 23.979 (EX1033), U.S. Patent Application Publication No. 2006/0003781 ("Jin") (EX1036) and TS23.060 (EX1034) in view of the knowledge of a POSITA.

6. Claims 1 to 5 and 7 to 16 will be referred to herein as the "Challenged Claims."

II. BACKGROUND AND QUALIFICATIONS

A. Qualifications

7. A full description of my educational background, professional achievements, qualifications, and publications in the past 30+ years are set forth more fully in my curriculum vitae, which is attached to this Declaration as Exhibit A. Below, I provide a brief summary of my background and qualifications.

8. I received my Ph.D. in Electrical and Computer Engineering from Washington State University in 1987. My dissertation research areas were in signal processing, communication system, and networks. I have several patents and over 100 journal and international conference publications. I have graduated over 70 MS and PhD students working under my supervision on their thesis, and many of them are professors in academia or have senior positions in industry. My research is funded by various sources, including industry and federal agencies, such as NSF, USAID, DARPA, JPL, and NASA.

9. Since 2001, I have held the position of Motorola[1] Endowed Chair Professor in communication and RF system at the School of Electrical, Computer, and Energy Engineering at Arizona State University ("Arizona State") in Tempe, Arizona.

10. I am also the Director of the National Science Foundation Center, Connection One. Connection One is a research center focused on developing wireless communication systems and networking technologies.

11. I have been involved in research, teaching, and developing products in the areas of communications, networking, wireless systems, satellite systems, analog and digital circuits, linear and switching power management integrated circuits (PMIC), sensors, electronics, and related areas for the last 30 years.

12. From 1987 to 1993, I was an assistant/associate professor at Oregon State University ("Oregon State").

---

[1] This position refers to a historical endowment established in 1998 for supporting communication, manufacturing, and supply chain programs at Arizona State. The objective of this endowment was to strengthen Arizona State's capabilities in these technologies. Three other Arizona State professors have this endowment title in manufacturing, communication, and supply management. I do not receive any funding from Motorola and have not since I joined Arizona State.

13. From 1997 to 2002, I was also an adjunct professor at the University of Texas at Austin.

14. At Oregon State, the University of Texas, and Arizona State, I taught courses in the areas of communication systems; wireless systems; networks; systems and circuits; digital integrated circuits, including HDL, Verilog, and VHDL; digital signal processing; and related areas. At Arizona State, I also developed a new course on wireless transceiver systems. I have been doing research in wireless communication and transceiver design for 2G–5G, SATCOM, Networking, WiFi, and wireless sensors since I joined Arizona State in 2001. My research has been funded by the NSF, DOD, DARPA, and industry in the wireless communication system.

15. I have been involved in research, teaching, and developing products in the areas of communication system, two-way radios, land-mobile radio systems, cellular systems, GPS, location, RF Integrated circuits, Analog and Digital Integrated Circuits, HDL, Verilog, VHD, communications, digital signal processing, and related areas for the last 30 years starting with the first generation of mobile phones. I have also worked on second generation (2G) and third generation (3G) mobile phone technologies including GSM, EDGE, IS-95, 1X CDMA, UMTS, Wide band CDMA, GPS, Bluetooth, and related areas. These terms all refer to leading mobile phone standards and technologies, which enjoyed

widespread use in mobile telephone networks throughout the world. I have also worked on other wireless data communication technologies including Bluetooth, the global positioning system (GPS), Wireless local area networks (LAN) (often known as WiFi), and related areas.

16. I have written and reviewed software code in HDL, Assembly, C, C++, DSP code, and MATLAB for processors. I have written, debugged, and reviewed software code for DSL, embedded microprocessors, and processors used for both wireline and wireless transceivers at Motorola, ASU, and as an expert witness.

17. From 1993–2002 I worked for Motorola at the land-mobile products sector (LMPS) wireless integrated technology Center. This group was responsible for the design and development of system, architecture, DSP, analog, and RF integrated circuits for 1G (AMPS, Digital AMPS), two-way radios, 2G (GSM, EDGE), and 3G (CDMA, WCDMA / UMTS, CDMA2000) transceiver. The products were Motorola flip phone, Razor, iDEN, etc.

18. At Motorola, I worked in the Land-Mobile Products Sector (LMPS) and cellular group. I have designed and contributed to the design of many communications wireless systems including two-way radios, trucking systems, two-way radios, land-mobile products, satellite communications, cellular systems, GPS and Bluetooth.

19. I represented Motorola and regularly attended many standards including ITU (International Telecommunication Unit), ETSI (European Telecommunications Standards Institute), and other standards as a technical expert. I also worked on the interaction of the Iridium satellite system with the cellular and LAN system networking.

20. I have over 200 journal and conference publications, 9 patents (and applications), and standards contributions. Several of these patents and publications are in the areas of communications, networking and radio systems. At Oregon State, UT, and Arizona State, I taught courses and researched in the areas of communication system, cellular system, land-mobile communication system, analog and digital integrated circuits, power management integrated circuits (PMIC), communication systems; radio frequency ("RF") systems and circuits; ("RFID"); magnetic and electronic sensors; including HDL, Verilog, and VHDL; digital signal processing; and related areas. The list of my publications is included in my resume in Exhibit A.

21. I have been an active member of IEEE communication, radio frequency, and networking societies since 1985 and have published, organized sessions, and been on various IEEE committees. I am an IEEE Fellow, which is the highest level of IEEE membership awarded by the IEEE directors to recognize a high level of demonstrated extraordinary accomplishments. The IEEE Fellow

Award is a special recognition for members with extraordinary accomplishments in the IEEE technical fields. To ensure that the recognition is extraordinary, the total number of recipients each year cannot exceed 0.1% of the total higher grade membership. The IEEE is the Institute of Electrical and Electronics Engineers, the world's largest association of technical professionals whose objectives include the educational and technical advancement of electrical and electronic engineering, telecommunications, computer engineering, and related disciplines.

22. I am a member of the IEEE Circuits and Systems Society, IEEE Solid State Circuits Society, IEEE Signal Processing Society, and IEEE Communication Society. I am also a member of the IEEE RF and Microwave committees, IEEE Low Power Symposium Committee, and IEEE Fellow Selection Committee. I was one of the key organizers establishing the IEEE Radio Frequency Integrated Circuits (RFIC) symposium in 1995, and I have been on the executive and technical committees of RFIC for the last 16 years.

23. I have received several awards including the Carter Best Teacher Award, the IEEE Darlington Award (which is given for the best technical paper on circuits and systems in the IEEE Circuits and Systems Society), and the Motorola 10X Rapid Design Cycle Reduction Award.

B. Materials Reviewed

24. In preparing this declaration, I have reviewed and/or considered at least the documents cited in the List of Exhibits and the documents referenced in this declaration. I have also reviewed the prosecution history of the ’852 patent.

III. RELEVANT LEGAL STANDARDS

25. I am not an attorney. For the purposes of this declaration, I have been informed by counsel for Petitioner about certain aspects of the law that are relevant to forming my opinions. My understanding of the law is as follows.

A. Burden of Proof

26. I understand that a petitioner in an IPR must demonstrate unpatentability by a preponderance of the evidence. I understand preponderance means more likely than not in this context.

B. Legal Standards for Prior Art

27. I understand that a patent or other publication must first qualify as prior art before it can be used to invalidate a patent claim.

28. I understand that a U.S. or foreign patent qualifies as prior art to an asserted patent if the date of issuance of the patent is prior to the invention of the asserted patent.

29. I further understand that a printed publication, such as an article published in a magazine or trade publication, qualifies as prior art to an asserted patent if the date of publication is prior to the invention of the asserted patent.

30. I understand that a U.S. or foreign patent also qualifies as prior art to an asserted patent if the date of issuance of the patent is more than one year before the filing date of the asserted patent.

31. I further understand that a printed publication, such as an article published in a magazine or trade publication, constitutes prior art to an asserted patent if the publication occurs more than one year before the filing date of the asserted patent.

32. I also understand that U.S. patents and U.S. patent application publications qualify as prior art to the asserted patent if the application for the patent or patent application publication was filed in the United Stated before the invention of the asserted patent.

C. Person of Ordinary Skill in the Art

33. I understand that my assessment of the claims of the ’852 patent and the teachings of the prior art and my analysis and opinions herein must be undertaken from the perspective of what would have been known or understood by a person of ordinary skill in the art, reading the ’852 patent on its priority date and in light of the specification and file history of the ’852 patent. I refer to such a person as a “POSITA.”

34. I further understand that in determining the level of ordinary skill in the art, I may consider factors including:

(a) the type of problems encountered in the art or field of invention;

(b) prior art solutions to those problems;

(c) the rapidity with which innovations are made;

(d) sophistication of the technology; and

(e) the educational level of active workers in the field.

35. I understand that a POSITA is not a specific real individual, but rather a hypothetical individual having the qualities reflected by the factors above. This hypothetical person has knowledge of all prior art in the relevant field and takes from each reference what it would teach to a person having the skills of a POSITA.

D. Anticipation

36. I understand that a patent claim may be "anticipated" if each element of that claim is present either explicitly or inherently in a single prior art reference, and that the elements should be arranged in the reference as in the claim. I understand that for a claimed limitation to be inherently present, the prior art reference need not expressly disclose the limitation, so long as the claimed limitation necessarily flows from a disclosure in the reference.

E. Obviousness

37. I understand that a patent claim can be considered to have been obvious to a POSITA at the time of the claimed invention. This means that, even if all of the requirements of a claim are not found in a single prior art reference, the

claim is not patentable if the differences between the prior art and the subject matter in the claim would have been obvious to a POSITA at the time of the claimed invention.

38. I understand that a POSITA provides a reference point from which the prior art and claimed invention should be viewed. This reference point prevents one from using his or her own insight or hindsight in deciding whether a claim is obvious.

39. I also understand that an obviousness determination includes the consideration of various factors such as (1) the scope and content of the prior art, (2) the differences between the prior art and the asserted claims, (3) the level of ordinary skill in the pertinent art, and (4) the existence of secondary considerations such as commercial success, long-felt but unresolved needs, failure of others, etc.

40. I understand that an obviousness evaluation can be based on a combination of multiple prior art references.

41. I also understand that the prior art references themselves may provide a suggestion, motivation, or reason to combine, but other times the nexus linking two or more prior art references is simple common sense.

42. I further understand that obviousness analysis recognizes that market demand, rather than scientific literature, often drives innovation, and that a

motivation to combine references may be supplied by the direction of the marketplace.

43. I understand that if a technique has been used to improve one device, and a POSITA would recognize that it would improve similar devices in the same way, using the technique is obvious unless its actual application is beyond his or her skill.

44. I also understand that practical and common-sense considerations should guide a proper obviousness analysis, because familiar items may have obvious uses beyond their primary purposes. I further understand that a POSITA looking to overcome a problem will often be able to fit together the teachings of multiple publications. I understand that obviousness analysis therefore takes into account the inferences and creative steps that a POSITA would employ under the circumstances.

45. I understand that a particular combination may be proven obvious merely by showing that it was obvious to try the combination. For example, when there is a design need or market pressure to solve a problem and there are a finite number of identified, predictable solutions, a person of ordinary skill has good reason to pursue the known options within his or her technical grasp because the result is likely the product not of innovation but of ordinary skill and common sense.

46. The combination of familiar elements according to known methods is likely to be obvious when it does no more than yield predictable results. When a work is available in one field of endeavor, design incentives and other market forces can prompt variations of it, either in the same field or a different one. If a person of ordinary skill can implement a predictable variation, the patent claim is likely obvious.

47. It is further my understanding that a proper obviousness analysis focuses on what was known or obvious to a POSITA, not just the patentee. Accordingly, I understand that any need or problem known in the field of endeavor at the time of invention and addressed by the patent can provide a reason for combining the elements in the manner claimed.

48. I understand that a proposed obviousness combination does not need to be the preferred, or most desirable, combination available, in order to render a claim obvious. Instead, there must be something that suggests the desirability of the proposed combination, not necessarily something that suggests that the proposed combination is the most desirable combination available.

49. Similarly, I understand that for purposes of obviousness, when a motivating benefit comes at the expense of another benefit, that does not nullify the proposed obviousness combination or modification. Likewise, a proposed

obviousness combination does not fail merely because it may be inferior to other systems used for the same use.

50. I also understand that a determination of obviousness based on teachings from multiple references does not require an actual, physical substitution of elements between the multiple references. Likewise, the test for obviousness is not whether the features of a secondary reference may be bodily incorporated into the structure of the primary reference. Instead, the test is whether a claim is rendered obvious by the teachings of the prior art as a whole.

51. I understand that a claim can be obvious in light of a single reference, without the need to combine references, if the elements of the claim that are not found explicitly or inherently in the reference can be supplied by the common sense of one of skill in the art.

52. I understand that in considering obviousness, I should keep in mind that a POSITA has ordinary creativity and is not an automaton.

53. I understand that in considering obviousness, it is improper to determine obviousness using the benefit of hindsight derived from the patent being considered.

54. I understand that secondary indicia of non-obviousness may include: (1) a long felt but unmet need in the prior art that was satisfied by the invention of the patent; (2) commercial success of processes covered by the patent;

(3) unexpected results achieved by the invention; (4) praise of the invention by others skilled in the art; (5) taking of licenses under the patent by others; (6) deliberate copying of the invention; (7) failure of others to find a solution to the long felt need; and (8) skepticism by experts.

55. I also understand that there must be a relationship between any such secondary considerations and the invention. I further understand that contemporaneous and independent invention by others is a secondary consideration supporting an obviousness determination.

56. In sum, my understanding is that prior art teachings are properly combined where a POSITA having the understanding and knowledge reflected in the prior art and motivated by the general problem facing the inventor, would have been led to make the combination of elements recited in the claims. Under this analysis, the prior art references themselves, or any need or problem known in the field of endeavor at the time of the invention, can provide a reason for combining the elements of multiple prior art references in the claimed manner.

F. Priority/Written Description

57. I understand that a patent application is entitled to the benefit of the filing date of an earlier filed patent application only if the disclosure of the earlier application provides written description support for the full scope of the claims of the later application, as required by the written description requirement of 35

U.S.C. §112. I understand that when a priority claim involves a chain of priority documents, each application in the chain leading back to the earlier application must comply with the written description requirement of 35 U.S.C. §112. I understand that, to satisfy the written description requirement of 35 U.S.C. §112, the disclosure of the earlier filed application must convey with reasonable clarity to those skilled in the art that, as of the filing date sought, the inventor was in possession of the invention. I understand that a prior application that merely renders the later-claimed invention obvious is not sufficient to meet the written description requirement—it must describe the claimed invention with all its limitations. Similarly, I understand that it is not sufficient for purposes of the written description requirement of 35 U.S.C. §112 that the disclosure, when combined with the knowledge in the art, would lead one to speculate as to modifications that the inventor might have envisioned, but failed to disclose.

58. I understand that even when each element may be individually described in the specification, the lack of adequate description of their combination renders those claimed combinations invalid under 35 U.S.C. §112. I understand that it is not enough that applicant show where each claimed element resides in the earliest filed application but applicant must also provide support for the linkage of the claimed elements creating the embodiment. Petitioner's counsel has informed that a patent owner cannot show written description support by picking and

choosing claim elements from different embodiments that are never linked together in the specification. I understand that a description that merely renders the invention obvious does not satisfy the written description requirement.

IV. THE '852 PATENT

A. Overview of the '852 Patent

59. I understand the '852 patent is directed to "[a] system and methodology to facilitate communication between non-compatible communication devices by utilization of a dynamic media proxy." EX1001, Abstract. The '852 discloses that public and private groups, such as police and firefighters, often employ communications systems (*e.g.*, land mobile radios ("LMR") and two-way radios communicating through push-to-talk ("PTT") technology). *Id.* 1:1–13. The endpoints on these communication systems often employed different technologies and/or standards, making it difficult for the endpoints of the different systems to communicate. *Id.* 1:13–16.

60. The '852 patent explains that prior art interoperability systems existed that allowed endpoints (*e.g.*, two-way radios) to communicate with different types of endpoints (*e.g.*, IP phones) using "an internet protocol (IP) network collaboration platform." EX1001, 1:19–24. These "interoperability system[s] expect[ed] certain behavioral conformance from the endpoints in the system," which was not an issue for "[e]ndpoints developed and controlled by the

interoperability system software." *Id.* 1:27–34. "However, endpoints based on platforms external to the interoperability system cannot automatically conform to the expected characteristics." *Id.* 1:34–36. The '852 claims to have overcome the alleged shortcomings of prior art interoperability systems by inserting a "proxy" when the endpoint lacked the necessary characteristics expected by the interoperability system. EX1001, 2:33–42.

61. As shown in Figure 1, below, an embodiment of the system disclosed by the '852 patent includes "an interoperability server (IS) 102, endpoints 104 and communication networks 106 that can be connected through a network 108." EX1001, 4:53–55. "Endpoints 104 can include, but are not limited to, non-compatible communication devices that can participate in a communication session, such as, PTT radios, IP phones, personal digital assistants (PDAs), personal computers, lang mobile radios (LMR), and the like." *Id.* 5:29–33; *see also id.* 5:59–64. "The networks 106 can include, but are not limited to, IP, non-IP, wireless or wireline networks and can be distributed locally or across multiple geographic locations." *Id.* 5:48–50. Although not illustrated in Figure 1, the endpoints 104 can be endpoints of the networks 106. *Id.* 5:11–15.

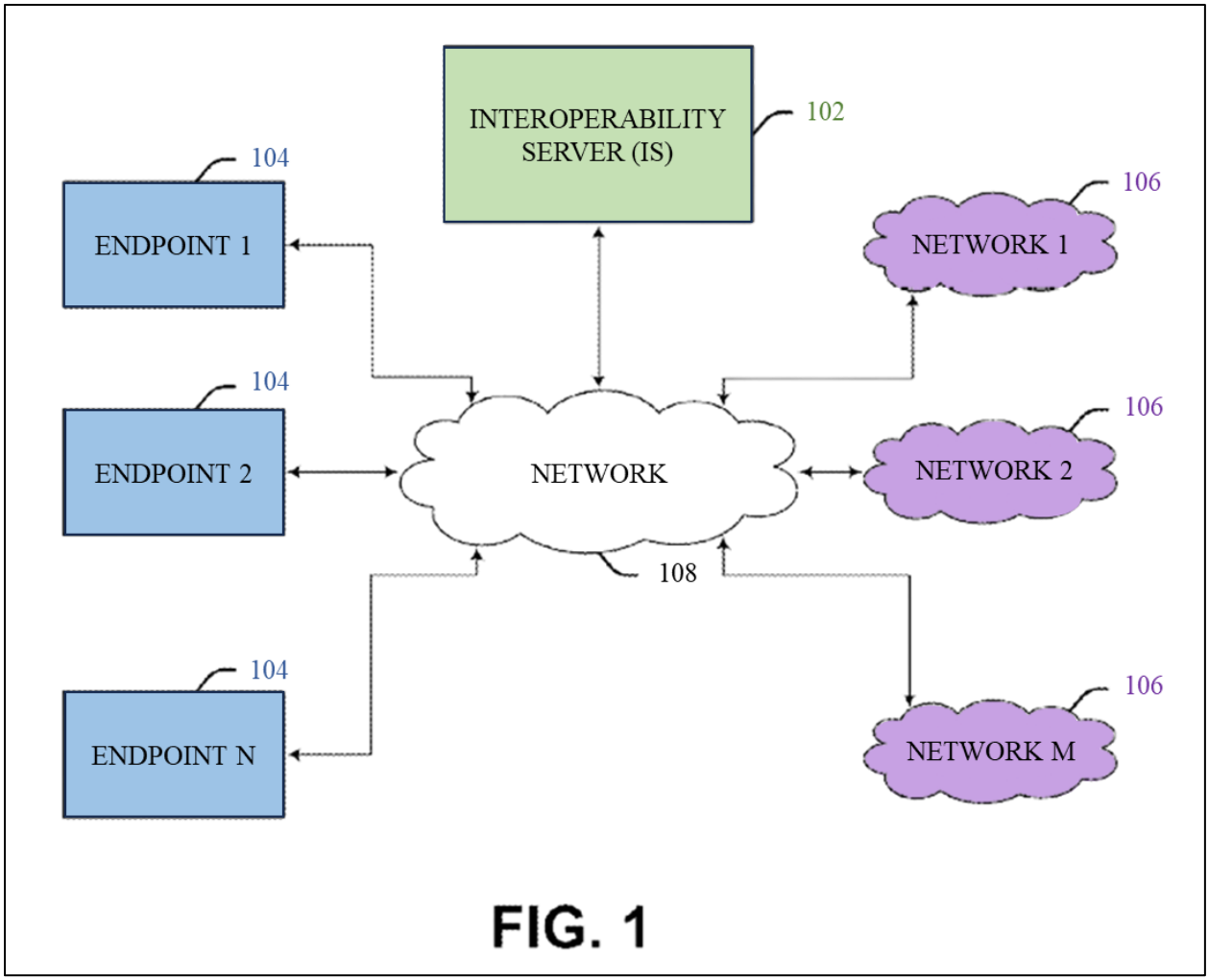

EX1001, Fig. 1.[2]

62. In operation, the capabilities of an originating endpoint 104 are analyzed by the Interoperability Server (IS) 102. EX1001, 2:43–46, 2:52–57, 6:14–16, 7:14–21. If the originating endpoint is unable to connect to the network 108, or if it is determined that the originating endpoint lacks certain capabilities, the interoperability server can "proxy for" the endpoint (EX1001, 6:62–63) or "can

[2] All emphasis, color, and annotations are added, unless otherwise indicated.

connect the [endpoint] to the [target endpoint] via a proxy." *Id.* 6:66–7:3; *see also id.* Fig. 7.

B. Priority Date of the Challenged Claims

63. I understand the '852 patent was filed on October 24, 2014, as U.S. Patent Application No. 14/523,299 ("the '299 Application") (EX1004) and claims priority to U.S. Patent Application No. 12/127,397 ("the '397 Application") (EX1017). I also understand the '397 Application published as U.S. Patent Application Publication No. 2009/0298525 ("Shaffer") (EX1016) on December 3, 2009, which later issued as U.S. Patent No. 8,892,149 ("the '149 patent") (EX1015).

64. As explained above, I understand that the '852 patent is entitled to the benefit of the filing date of an the '397 Application only if the disclosure of the '397 Application provides written description support for the full scope of the claims of the '852 patent. As explained below, it is my opinion that the '397 Application does not provide written description support for the full scope of the claims of the '852 patent.

65. In particular, it is my opinion that there is no written description support in the '397 Application for the following claim limitation, which appears in each independent Challenged Claim of the '852 patent: "receiv[e/ing] a first determination from the [IS/interoperability server] that the [endpoint/initiating

device] is not in adherence with capabilities of the predefined floor control mechanism and that a proxy is to be dynamically inserted to connect the [endpoint/initiating device] to a virtual talk group…." (the "First Determination Limitation").

66. The First Determination Limitation was added by the patentee during the prosecution of the '852 patent. Specifically, on November 30, 2015, the patentee added the First Determination Limitation as dependent claim 40, which depended from then-pending claim 20, which eventually issued as claim 1:

> 20. (Currently Amended) An apparatus comprising:
>
> an information determination component that identifies information related to an endpoint to obtain identified information; and
>
> a negotiation component that negotiates a communication session with an interoperability server (IS) <u>to dynamically determine if the endpoint should be connected to a virtual talk group</u> via a proxy or directly connected to the virtual talk group based in part on at least one of the identified information or a predefined floor control mechanism associated with the IS.
>
> …
>
> 40. (New) The apparatus of claim 20, wherein the negotiation component is configured to:
>
> receive a first determination from the IS that the endpoint is not in adherence with capabilities of the predefined floor control

> mechanism and that the proxy is to be dynamically inserted to connect the endpoint to the virtual talk group, wherein the capabilities comprise quality of service, rules of transmission and trusted endpoint identity;
>
> receive a second determination from the IS to connect the endpoint directly to the virtual talk group without the proxy when the endpoint is conforming with the capabilities, and
>
> connect the endpoint to the virtual talk group in response to receiving one of the first determination or the second determination.

EX1003, at 42, 46 (underlining in original) (color added).

67. The patentee claimed that support for dependent claim 40 (*i.e.*, for the First Determination Limitation) "may be found in FIG. 7 and the accompanying description from the specification, as well as paragraph [0034] of the specification." EX1003, 49. These sections of the specification for the application for the '852 patent correspond to portions of the '397 Application (EX1017) at 13–14 (paragraph [0034]), 21–22 (accompanying description of Figure 7 in paragraphs [0055] to [0057]), and 40 (Figure 7). *See also* EX1004 ('299 Application), 10–11 (paragraph [0034]), 18–19 (accompanying description of Figure 7 in paragraphs [0055] to [0057]), 37 (Figure 7).

68. It is my opinion that none of the material cited by the patentee, nor anything else in the '397 Application, provides the necessary written description support for the First Determination Limitation. Figure 7, reproduced below, and its

accompanying description, merely discloses a flow diagram for determining whether a proxy should be inserted. EX1017, at 21–22, 40. And paragraph 34 merely discloses that the IS can determine whether a proxy is necessary based on the information received from an initiating endpoint. EX1017, at 13–14. There is no disclosure in paragraph 34, Figure 7 and its accompanying description, or anywhere else in the ’397 Application that any device receives the first determination specified in the First Determination Limitation. *See generally* EX1017.

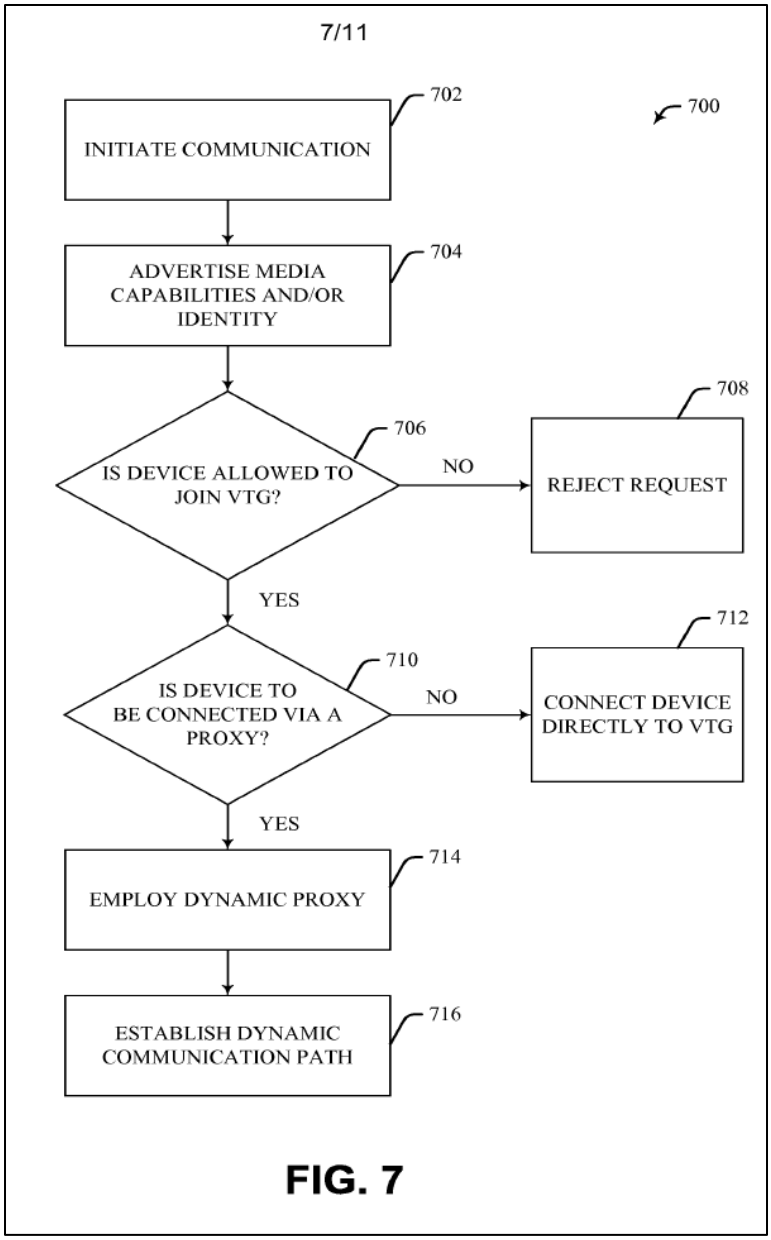

FIG. 7

69. It is also my opinion that there is no inherent disclosure of the First Determination Limitation in the ’397 Application—because no device necessarily receives the determination required in the First Determination Limitation. For example, it is possible that neither the initiating nor the target endpoints are aware of the insertion of a proxy. In fact, proxies are often inserted in ways that are

completely transparent to the endpoints. U.S. Patent Application Publication No. 2010/0004014 to Stephane Coulombe ("Coulombe") (EX1025) provides an example of this:

> This section describes a third non-restrictive illustrative embodiment of the present invention, where transcoding is transparent PoC transcoding. Transparent transcoding means that the PoC terminals and servers are not aware that transcoding is taking place and behave as any conventional PoC entity would do in a context where no transcoding is performed. The Transcoding Server is inserted as a proxy in the communication path. The main advantage of this approach is that it does not require any modification to existing PoC terminals and servers. Indeed, an operator who has already deployed a PoC system can add PoC transcoding without any change to the already deployed PoC terminals and servers. This approach has been proven effective to Smoothly introduce transcoding in the Multimedia Messaging Service.

EX1025, ¶189; *see also id.*, ¶¶9, 34, 190–93, Fig. 13.

70. Challenged Claims 1 and 12 also require that a device with a processor configured to <u>not only receive the determination</u> specified in the First Determination Limitation, <u>but also configured to identify information related to an endpoint and negotiate a communication session with the IS</u>. Claim 12 further requires that the device with a processor that performs each of these functions be an endpoint. There is nothing in the '397 Application that discloses these additional requirements of Challenged Claims 1 and 12.

71. For all of the reasons discussed above, the Challenged Claims do not have any written description support for the First Determination Limitation. As a result, no Challenged Claim is entitled to priority to the ’397 Application.

C. Person of Ordinary Skill in the Art

72. Based on my analysis and review of the ’852 patent, the prior art cited herein, and the ordinary skill factors defined in Section III.C, a POSITA at the time of the earliest alleged priority of the ’852 patent (May 27, 2008) would have had at least a bachelors’ degree in electrical engineering, computer science, or a similar field, plus approximately three years of industry in networking or communication systems, in particular address interoperability between different types of networks and satellite communications. Additional education in the fields of electrical engineering or computer science, such as a masters or doctorate degree, could substitute for professional experience in the field. A person with less or different education but more relevant practical experience, or vice versa, may also meet this standard.

73. My opinion regarding a POSITA is the same regardless whether the ’852 patent is entitled to a priority date of May 27, 2008 (the filing date of the ’149 patent) or April 19, 2016 (the filing date of the ’852 patent).

D. Claim Construction

74. I have been informed by counsel for Petitioner that the Challenged Claims are interpreted using the same claim construction standard that is used to construe claims in a civil action in federal district court. I understand that this means that claim terms of a patent are given the ordinary and customary meaning the terms would have to a POSITA, in view of the description provided in the patent itself and the patent's file history.

75. I understand that to determine how a POSITA would have understood a claim term, one should look to those sources available that show what a POSITA would have understood the disputed claim language to mean. I understand that, in construing a claim term, one looks primarily to the intrinsic patent evidence, including the words of the claims themselves, the remainder of the patent, and the patent's prosecution history.

76. I understand that extrinsic evidence, which is evidence external to the patent and the prosecution history, may also be useful in interpreting patent claims but that extrinsic evidence cannot be used to vary or contradict the meaning indicated by the intrinsic patent evidence. I understand that words or terms should be given their ordinary and accepted meaning unless it appears that the inventors were using them to mean something else. In making this determination, the claims, the remainder of the patent, and the prosecution history are of paramount

importance. Additionally, the patent and its prosecution history must be consulted to confirm whether the patentee has acted as its own lexicographer (*i.e.*, provided its own special meaning to any disputed terms), or intentionally disclaimed, disavowed, or surrendered any claim scope.

77. I do not contend that these proposed constructions are complete constructions of these limitations or the claims for any other purpose, including for issues that have been or will be raised in the related litigation. Because the prior art asserted herein discloses or renders obvious devices and methods that are within the indisputable scope of the claims, it is not necessary to construe the outer bounds of the claims as part of these proceedings.

78. Any claim terms not listed below should be construed according to their plain and ordinary meaning to a POSITA at the time of the ’852 patent.

1. “receiv[e/ing] a first determination from the [IS]/[interoperability server] that the [endpoint]/[initiating device] is not in adherence with capabilities of the predefined floor control mechanism and that a proxy is to be dynamically inserted to connect the [endpoint]/[initiating device] to a virtual talk group, wherein the capabilities comprise quality of service, rules of transmission and trusted endpoint identity.” (claims 1, 8, 12)

79. A POSITA would have understood this limitation to require receiving a determination from the IS: (a) “that the endpoint is not in adherence…;” and (b) “that a proxy is to be dynamically inserted….” A POSITA would have understood that it is possible, but not required, that the proxy be dynamically

inserted because the endpoint is not in adherence with the capabilities of the predefined floor control mechanism.

80. A POSITA would have recognized that the claim limitation has two separate dependent clauses—"that the endpoint is not in adherence…" and "that a proxy is to be dynamically inserted…"—in parallel structure, with no recited dependence between the two.

81. The prosecution history would have reinforced a POSITA's understanding of this claim limitation. During prosecution, claim 20 (issued claim 1) was originally amended by the patentee to expressly require that the determination whether to insert a proxy be "based in part on at least one of the identified information." EX1003, at 32. Later, however, the patentee authorized the examiner to remove this express requirement in an examiner's amendment, after which the '852 patent issued:

> 20. (Currently Amended) An apparatus comprising a processor, wherein the processor is configured to:
>
> ~~an information determination component that identifies~~ identify information related to an endpoint to obtain identified information; and
>
> ~~a negotiation component that negotiates~~ negotiate a communication session with an interoperability server (IS) ~~to dynamically determine if the endpoint should be connected to a virtual talk group via a proxy or directly connected to the virtual talk group~~ based in part on at least

one of the identified information or a predefined floor control mechanism associated with the IS; and

receive a first determination from the IS that the endpoint is not in adherence with capabilities of the predefined floor control mechanism and that a proxy is to be dynamically inserted to connect the endpoint to a virtual talk group, wherein the capabilities comprise quality of service, rules of transmission and trusted endpoint identity.

EX1003, at 13–14 (underlining and strikethrough in original) (color added).

82. Simply put, a POSITA would have understood that the proxy can be dynamically inserted for reasons besides correcting for an endpoint not in adherence with the capabilities of the predefined floor control mechanism.

V. OVERVIEW OF THE PRIOR ART REFERENCES

83. I have been informed by counsel for Petitioner that the following documents are prior art to the ’852 patent.

A. U.S. Patent Application Publication No.2006/0058007 (“Choksi”) (EX1005)

84. U.S. Patent Application Publication No. 2006/0058007 (“Choksi”) discloses[3] a system “for an interworking network architecture that is optimized for

[3] I understand Choksi claims priority to and incorporates by reference the disclosures of U.S. Patent Application Nos. 11/047,897 (EX1006) (issued as U.S. Patent No. 7,359,726 (EX1007)), and 11/047,892 (EX1008) (issued as U.S. Patent

PTT communications among subscribers on different carrier networks, irrespective of subscriber and carrier location and underlying PTT technology." EX1005, ¶5. Choksi refers to the interworking network architecture as a "worldwide dispatch (WWD) architecture," a "PTT inter-working architecture," and variations thereof. For simplicity, I will refer to the interworking architecture of Choksi as the "WWD architecture."

85. Figure 1 of Choksi, below, shows a high-level block diagram of the WWD architecture. EX1005, ¶9. The WWD architecture "assists in translating and managing dispatch sessions between a plurality of dispatch networks, such as dispatch network 20 and dispatch network 30," while each dispatch network "facilitates dispatch calls between a plurality of subscriber units (SU)." EX1005 ¶¶30–31. Choksi explains that "the dispatch networks 20 and 30 may be any communications systems…that facilitate dispatch communications between at least two devices," such as "subscriber units (SU)" 22, 24, and 26 for Dispatch Network 20, and "subscriber units (SU)" 32, 34, and 36 for Dispatch Network 30. *Id.* ¶31.

No. 7,359,731 (EX1009)), as well as U.S. Provisional Patent Application Nos. 60/608,110 (EX1010), 60/608,113 (EX1011), 60/608,117 (EX1012), 60/608,126 (EX1013), and 60/608,131 (EX1014).

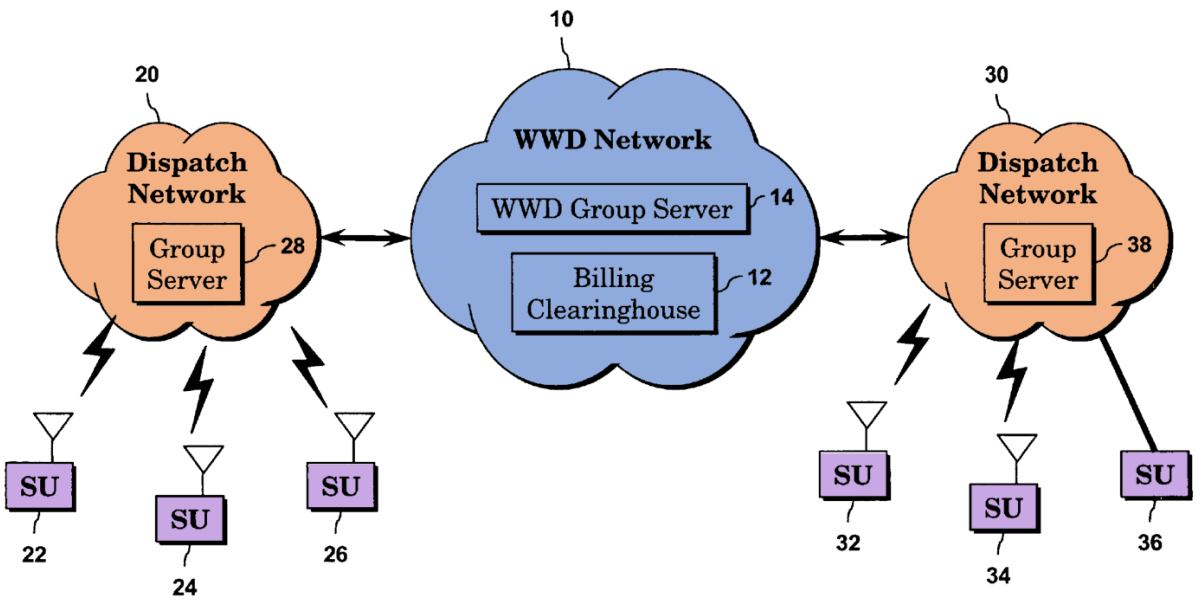

Fig. 1

EX1005, Fig. 1.

86. Choksi's "subscriber unit[s]" correspond to what the '852 patent calls an "endpoint." *Compare* EX1005, ¶32 (subscriber units include "mobile telephones, personal digital assistants, and portable computers.") *with* EX1001, 5:29–33 (endpoints include "PTT radios, IP phones, personal digital assistants (PDAs), personal computers, land mobile radios (LMR), and the like.").

87. Figure 3 of Choksi, below, shows a functional block diagram of the WWD architecture (everything within the dashed outline 98), including the different functional components therein:

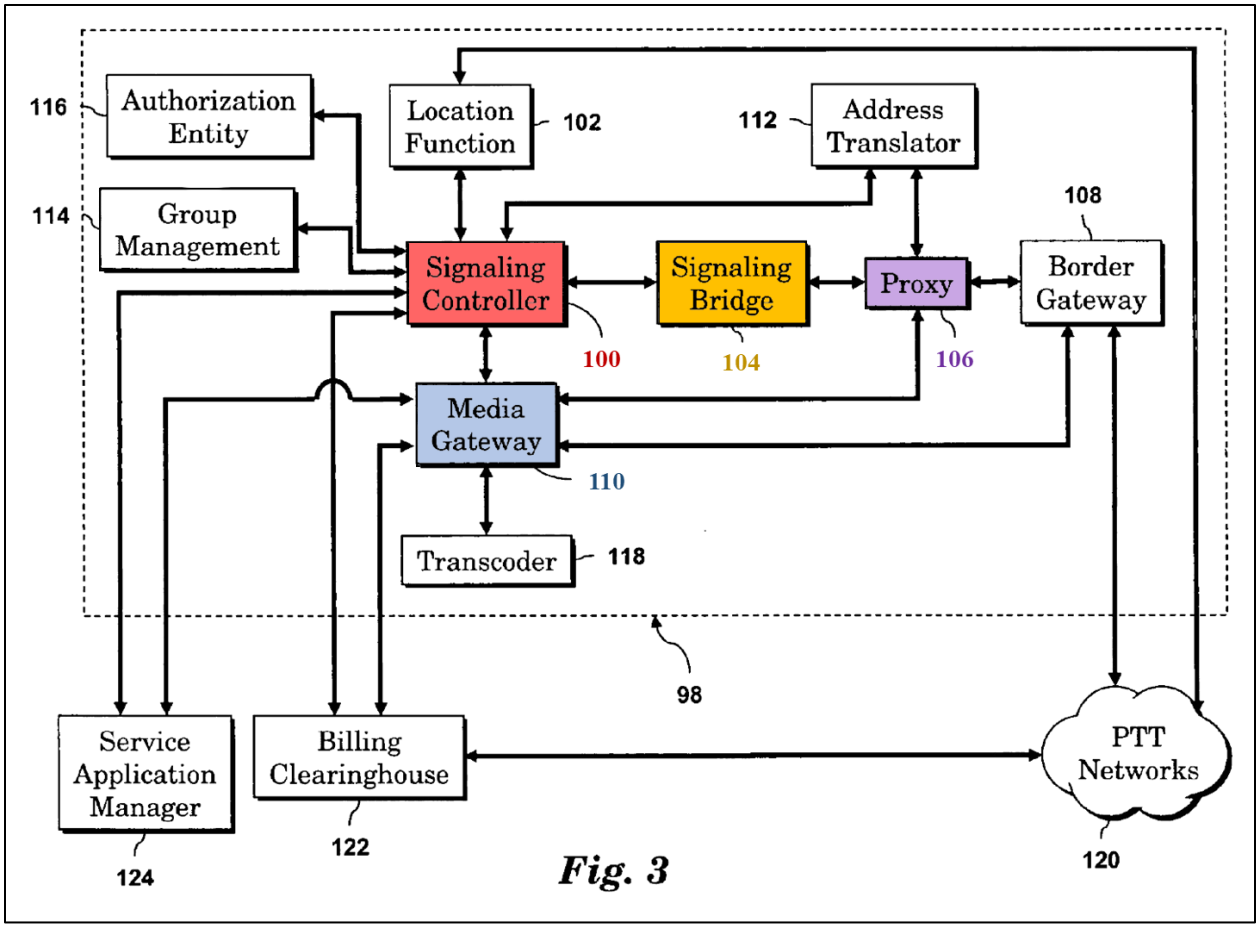

EX1005, Fig. 3; *see also id.* ¶43 (describing the signaling controller 100); *id.* ¶45 (describing the signaling bridge 104); *id.* ¶46 (describing the proxy 106); *id.* ¶¶51–52 (describing the media gateway 110).

88. Figures 4 to 13 of Choksi are exemplary "physical architectures" and call flow diagrams containing some or all of the components described in the functional block diagram of Figure 3. EX1005, ¶42; *see also id.* ¶¶11–21.

B. U.S. Patent Application Publication No. 2009/0298525 ("the '525 publication" or "Shaffer") (EX1016)

89. U.S. Patent Application Publication No. 2009/0298525 ("Shaffer") (EX1016) has nearly the same disclosure as the '852 patent—the main difference is the claims.

C. U.S. Patent Application Publication No. 2004/0133683 ("Keller") (EX1024)

90. U.S. Patent Application Publication No. 2004/0133683 ("Keller") (EX1024) discloses a "call control architecture that takes advantage of the application layer routing control of SIP" for use with PTT calls. EX1024, ¶¶11, 14. "The architecture 200 is ideal for time critical communications systems such as public safety dispatch systems." EX1024, ¶25. Figure 2, below, shows an exemplary call control architecture 200 that allows for endpoints to communicate using SIP.

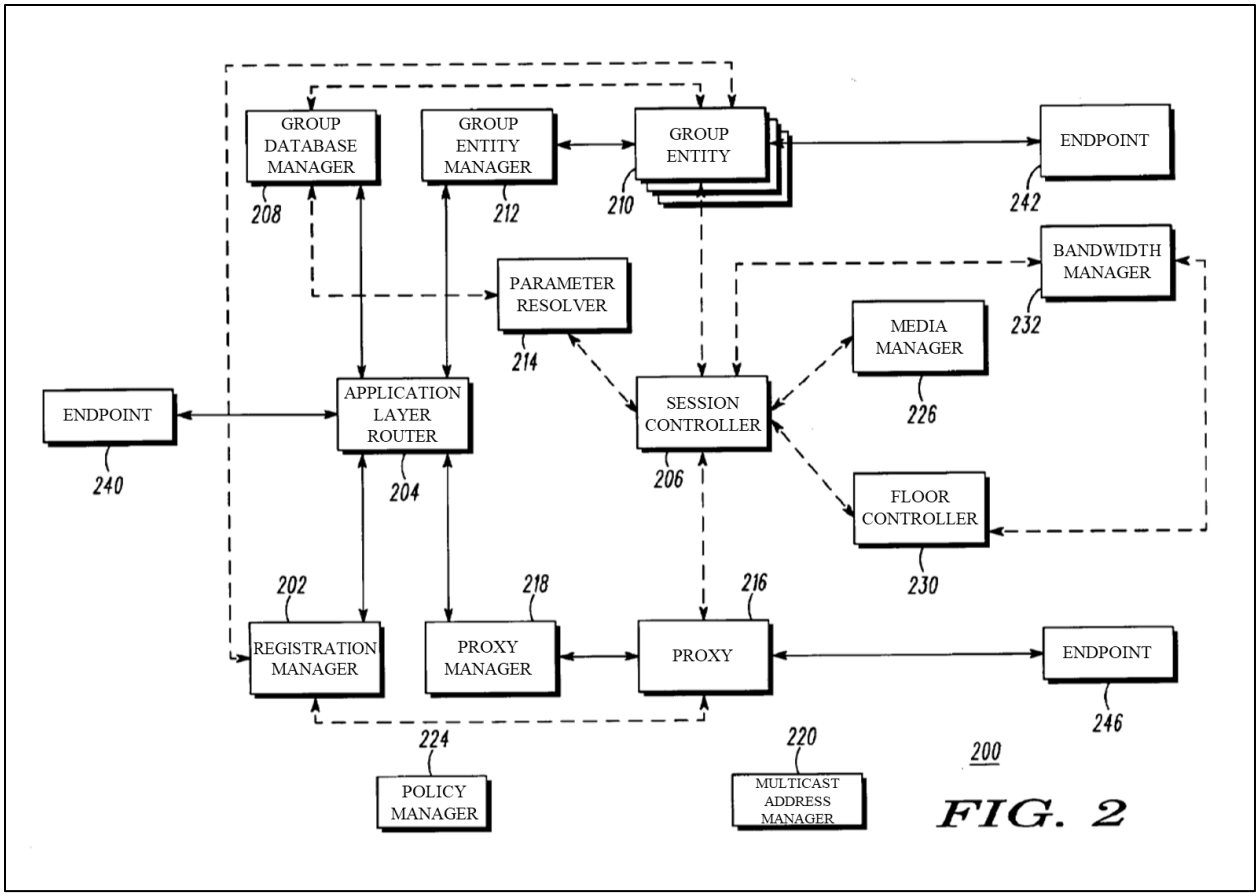

EX1024, Fig. 2 (names added from ¶¶26, 34).

91. "Entities connected with solid black lines [in Figure 2] communicate using a transactional protocol or broadcast protocol," with "[t]he preferred transactional protocol [being] SIP." *Id.* ¶25.

92. In operation, the proxy 216 inserts itself into the message path between endpoints through "the appropriate use of SIP's RECORD-ROUTE header. This [e]nsures that any future SIP requests from either endpoint will be routed through the individual proxy 216 by use of the complementary SIP ROUTE header." *Id.* ¶46.

D. Open Mobile Alliance (OMA) Push to Talk Over Cellular (PoC)

93. The Open Mobile Alliance ("OMA") began developing a Push to Talk over Cellular (PoC) standard no later than 2003.[4] Whereas push-to-talk communication was traditionally limited to radios and similar devices, PoC was designed to allow for push-to-talk-based communication over cellular networks. EX1031, 19 (defining "Push To Talk Service (P2T)" as "Non OMA PoC 'walkie-talkie' service."). The OMA PoC standard comprises, among others, the PoC Architecture (EX1029), PoC Requirements (EX1030), PoC System Description (EX1031), and PoC Interworking Service (EX1032).

1. PoC System Description (EX1031)

94. "The scope of the Push to talk over Cellular (PoC) V2.0 system description document is to define the system concepts and high level procedures for the PoC service enabler V2.0." EX1031, 10.

2. PoC Architecture (EX1029)

95. The PoC Architecture document provides the architecture for the PoC, based on the "requirements listed for the system in the PoC requirements document." EX1029, 5. The PoC Architecture document further defines the

---

[4] *See* https://web.archive.org/web/20061006094425/http://member.openmobilealliance.org/ftp/public_documents/POC/2003/ (publicly available database of documents from 2003 related to the development of PoC).

different functional entities used in the PoC architecture and further defines the protocols used to communicate between the different functional entities. EX1029, 19–22. The goal was to allow for "interoperability among the network entities to avoid market fragmentation, by realizing the PoC service in a widely acceptable and standardized manner." *Id.*, 14.

3. PoC Interworking Service (EX1032)

96. PoC Interworking Service provides examples of how to interwork between traditional PTT/P2T (*e.g.*, two-way radios) and PoC. EX1032, 7. In particular, "PoC Interworking Service supports three different topologies based on the following basic usage scenarios: [1] P2T Users participate in the PoC Session and PoC Session control is in the PoC Network; [2] PoC Users participate in the PoC Session and PoC Session control is in the P2T Network; and [3] PoC Remote Access User(s) participates in the PoC Session. *Id.* PoC Interworking Service then further defines the different components used within the interworking service, either directly or though reference to another OMA PoC document.

E. TR23.979-700 (EX1033)

97. The 3rd Generation Partnership Project ("3GPP") developed specifications (*i.e.*, standards) that cover cellular communications technologies, including radio access, core network, and service capabilities. The 3GPP often works in collaboration with others and/or develops/modifies their standards as

technology progresses. In particular, by 2003, 3GPP recognized that "[a]dvanced interactive conferencing applications like Push to talk over Cellular (PoC) service enablers [were] being developed" by the Open Mobile Alliance ("OMA"). EX1033, 5; *see also* 3GPP Portal, Specification No. 23.979, available at https://portal.3gpp.org/desktopmodules/Specifications/SpecificationDetails.aspx?specificationId=1009 (version 0.0.0 dated October 20, 2003). 3GPP also recognized "that some enhancements of the 3GPP specifications will be needed in order to use IMS & its capabilities as a base for the PoC services." EX1033, 5. The result was 3GPP specification no. 23.979 (*i.e.*, TR23.979). *Id.*

F. TS23.060 (EX1034)

98. 3GPP TS23.060-800 provides the technical specifications for the general packet radio service (GPRS), including those related to maintaining security for packetized radio transmissions. EX1034, 57 (Section 6.8).

G. Chowdhury (EX1035)

99. Chowdhury discloses an apparatus and method for connecting a traditional push-to-talk (PTT) (*e.g.*, two-way radio) system with an OMA PoC system. EX1035, Fig. 1, 3:11–26. For example, Figure 1, below, shows OMA-PoC Based Network 20 connected to P25 Network 30 via Gateway 10:

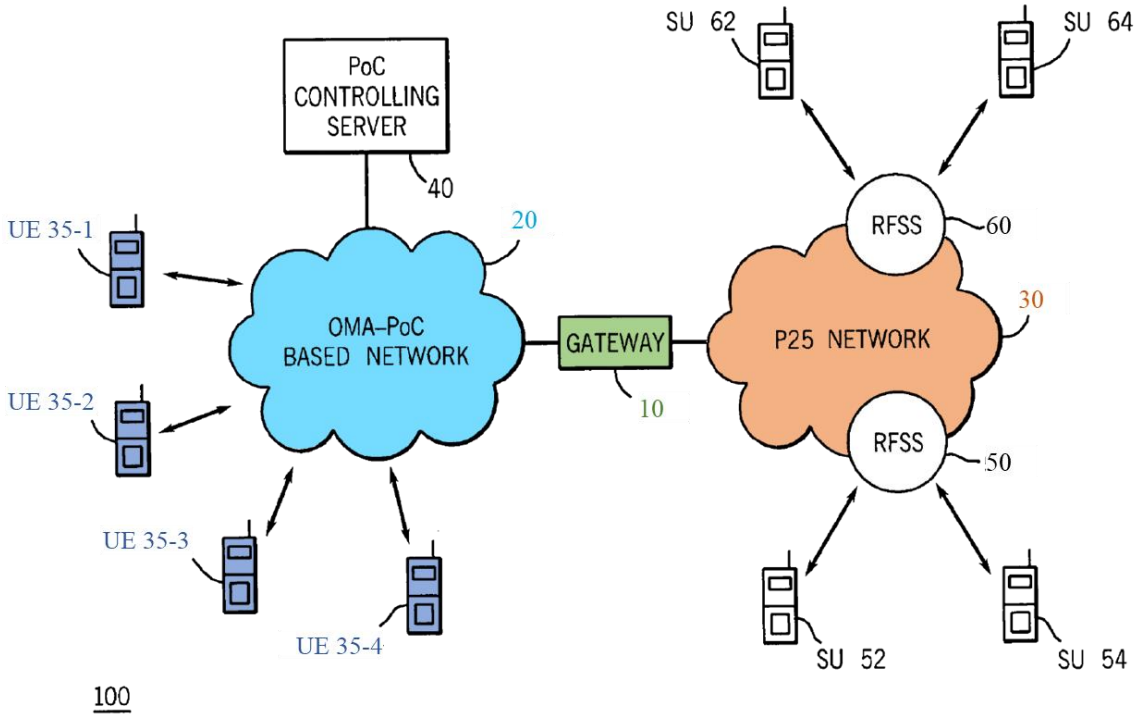

FIG. 1

100. Chowdhury further discloses the interworking of Gateway 10, as shown below in Figure 2, as well as the different means by which communications and signals are transmitted from OMA-PoC Based Network 20 to P25 Network 30 in Figures 3 to 8 and their accompanying description in the specification.

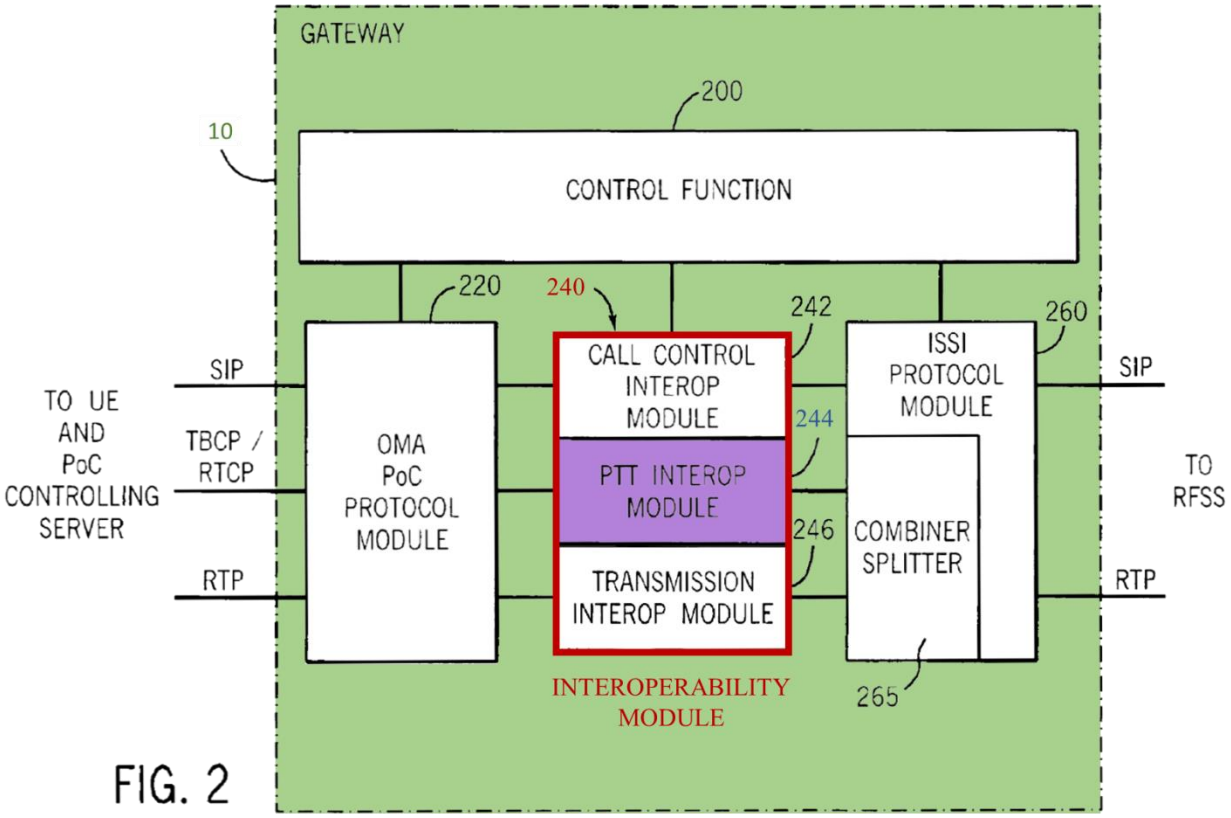

H. Jin (EX1036)

101. Jin discloses a mobile station 202, as shown in Figure 2, below, that is designed to communicate using push-to-talk over cellular:

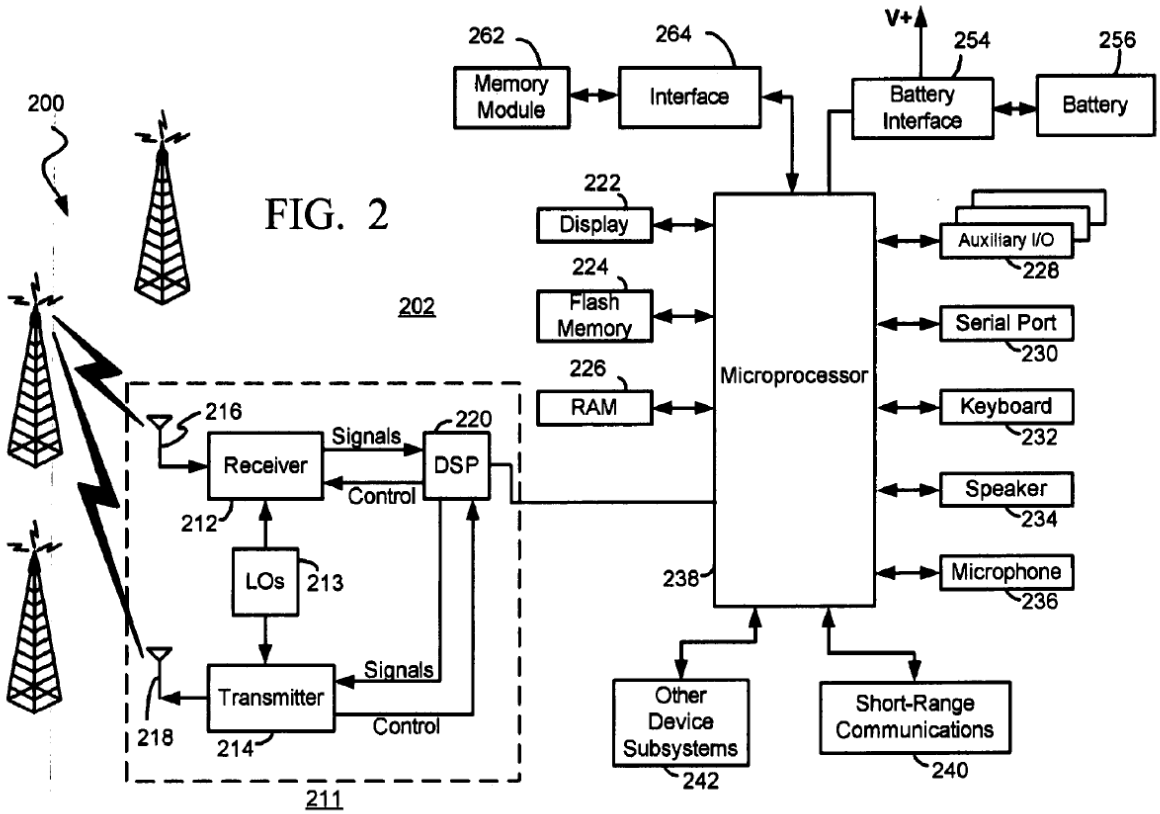

EX1036, Fig. 2, ¶¶[0031]–[0038].

VI. GROUND 1: CHOKSI IN VIEW OF THE KNOWLEDGE OF A POSITA RENDERS OBVIOUS CLAIMS 1–5 AND 8–11

A. Motivation to Combine Embodiments within Choksi

102. A POSITA would have found it obvious to combine the various embodiments within Choksi. Choksi relates to push-to-talk (PTT) wireless communications systems. As I explained above, Choksi first discloses a high-level overview of the worldwide dispatch (WWD) architecture (Figure 1) before gradually disclosing detailed potential physical embodiments and flow diagrams (Figures 4–13). Each of the physical embodiments and flow diagrams use the

same underlying functional components, with each of the underlying functional components providing the same functionality as described in the functional block diagram (Figure 3).

103. For example, Choksi explains that some of the functional components described in the functional block diagram (Figure 3) are grouped together in a single physical component. As one example, Figure 4, below, shows "custom PTT gateway GW [that] include a proxy function, a signaling controller, a signaling bridge function for each supported technology and media gateway, as discussed above with respect to FIG. 3." EX1005, ¶59.

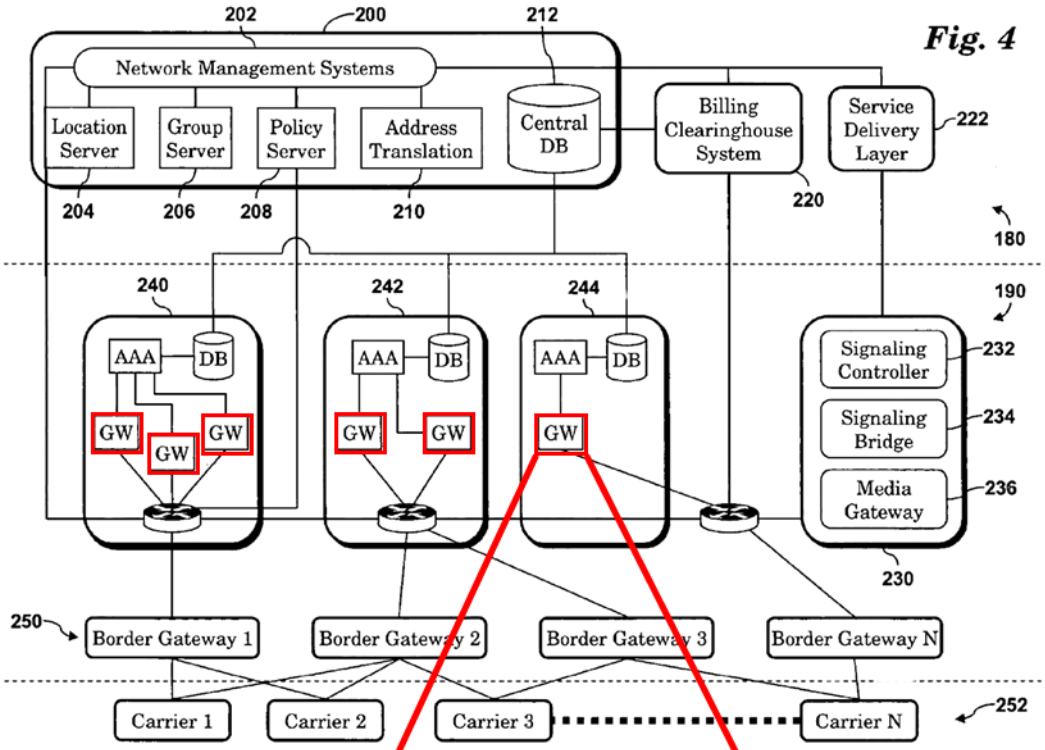
Fig. 4
202
200
212
Network Management Systems
Location Server
Group Server
Policy Server
Address Translation
Central DB
Billing Clearinghouse System
Service Delivery Layer
222
204
206
208
210
220
180
240
242
244
190
AAA
DB
GW
Signaling Controller
232
Signaling Bridge
234
Media Gateway
236
230
250
Border Gateway 1
Border Gateway 2
Border Gateway 3
Border Gateway N
Carrier 1
Carrier 2
Carrier 3
Carrier N
252

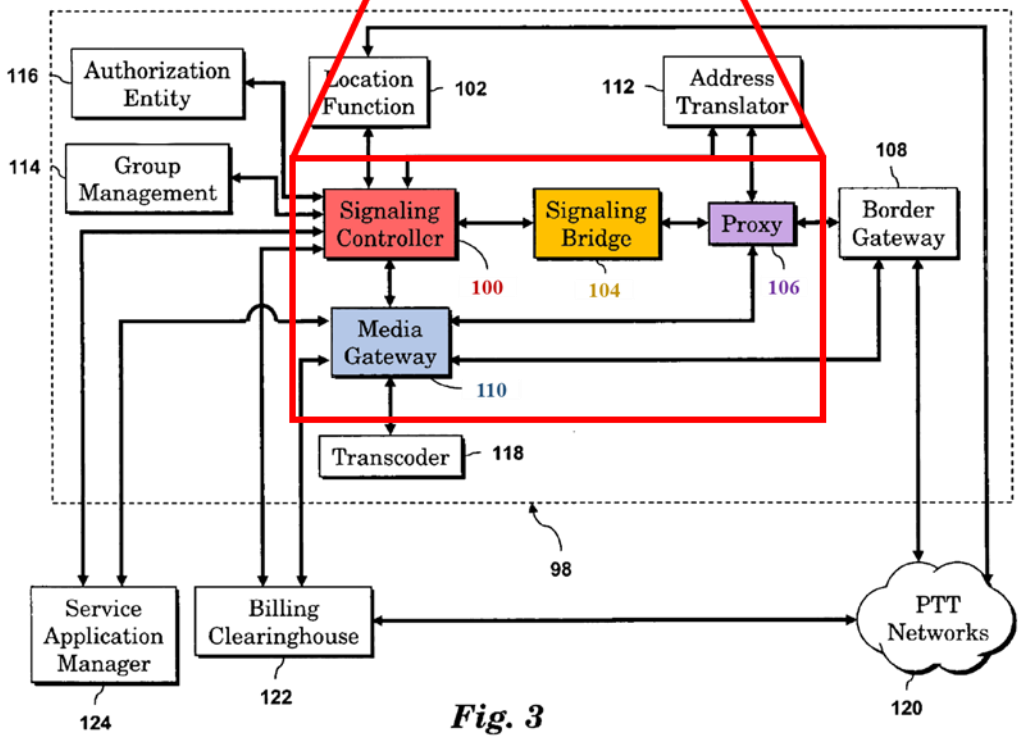
116
Authorization Entity
Location Function
102
112
Address Translator
114
Group Management
108
Signaling Controller
Signaling Bridge
Proxy
Border Gateway
100
104
106
Media Gateway
110
Transcoder
118
98
Service Application Manager
Billing Clearinghouse
PTT Networks
124
122
120

Fig. 3

104. Choksi further discloses that in some instances "to facilitate operation of PTT centric applications through the service delivery architecture 222, an inter-working vendor may include a service delivery interface 230 that include signaling controller 232, signaling bridge 234 and media gateway 236." EX1005, ¶59.

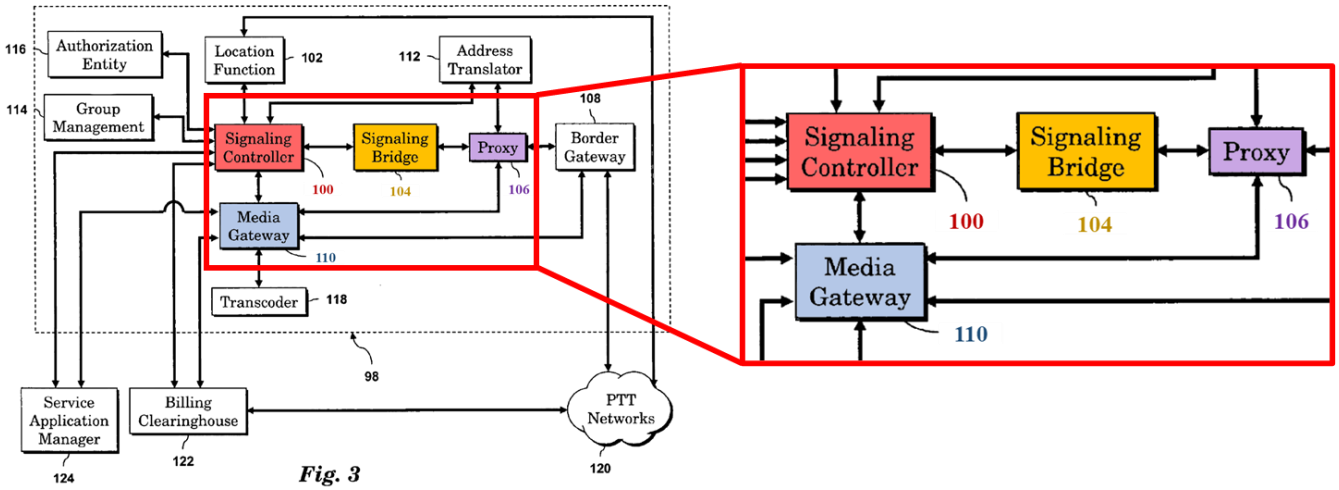

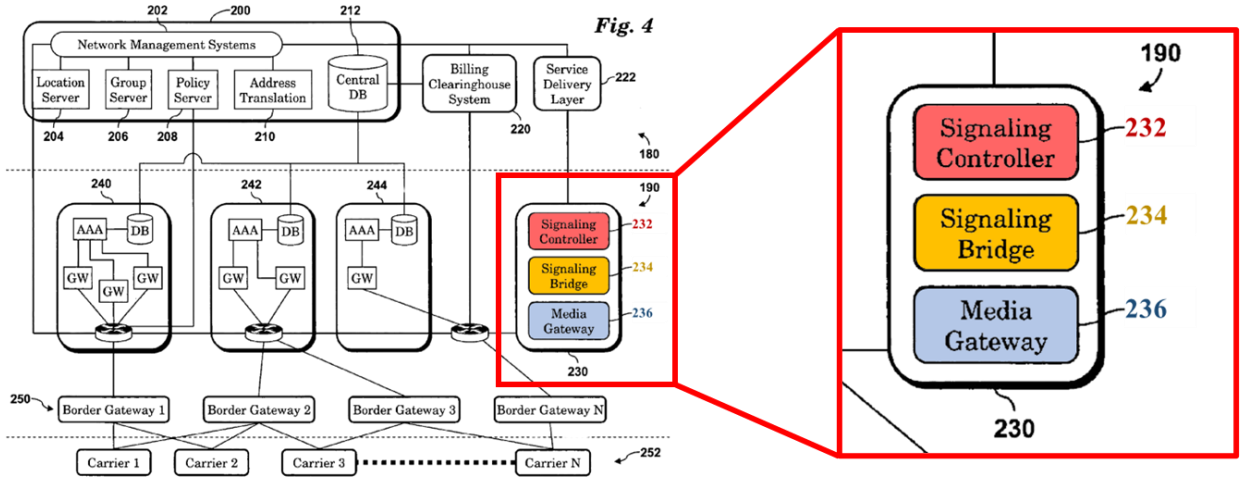

105. Choksi also discloses a "second embodiment [that] may include the same core network components 180, border gateways 250 and carrier networks 252 of the first embodiment illustrated in FIG. 4. The regional network components 290 include a plurality of POPs, such as POPs 300, 310 and 320.

Each POP includes a signaling controller (302, 312, and 322, respectively), a signaling bridge (304,314 and 324, respectively), and a media gateway (306, 316 and 326, respectively)." EX1005, ¶66. The signaling controller (processor) manages communications across PTT carriers and technologies.

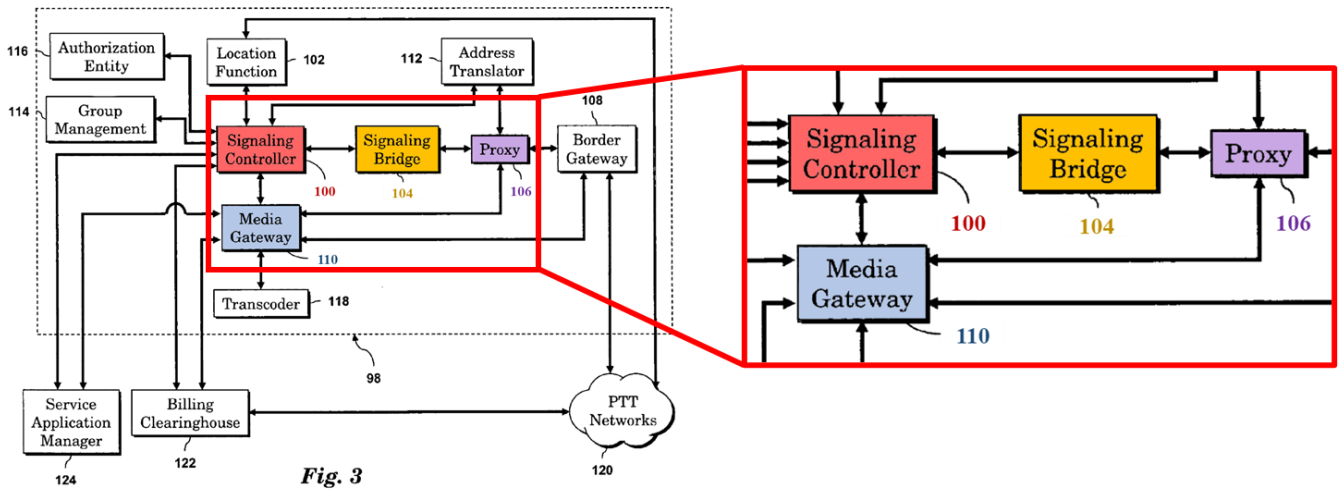

Fig. 3

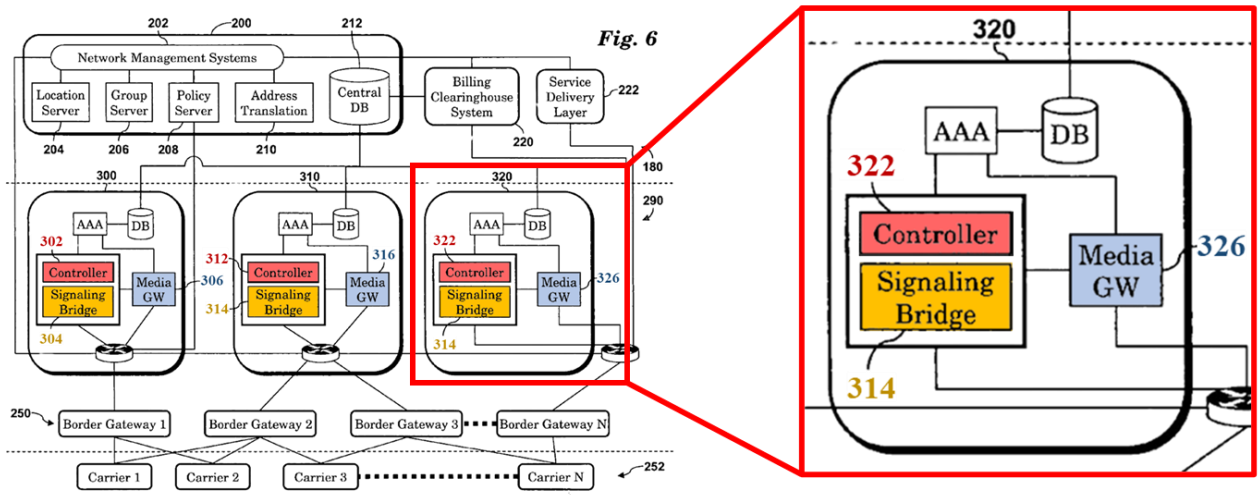

Fig. 6

106. Choksi explains that in the second embodiment "all sessions undergo translation, irrespective of the originating and terminating technologies, [so] the proxy function is not required." EX1005, ¶65. Nevertheless, a POSITA would have understood the disclosure of Choksi to include a second embodiment

variation that included a "proxy function" (a/k/a proxy 106), because the proxy 106 was one of the core components described in the high-level block diagram of the WWD architecture (Figure 3). In other words, Figure 6 shows an example where the proxy 106 (the so-called "proxy function") has simply been removed—and it would not be difficult for a POSITA to add back said "proxy function." Moreover, a POSITA would have been motivated to add a "proxy function" to the second embodiment because, as Choksi explains, the "proxy function" (a/k/a proxy 106) "reduces the call setup and floor arbitration latencies associated with the inter-working calls." EX1005, ¶88.

107. Choksi also discloses a third embodiment as "illustrated in FIG. 10. This embodiment is similar to the second embodiment illustrated in FIG. 6, but includes a proxy 602 to control whether WWD sessions between carriers will be translated. As illustrated, at least one POP 600 is networked with the WWD core network 614, regional networks 616 and at least one border gateway 618. The POP 600 includes the proxy server 602, a signaling bridge 604, a controller 606, an AAA 608, a regional database 610 and a media gateway 612." EX1005, ¶88.

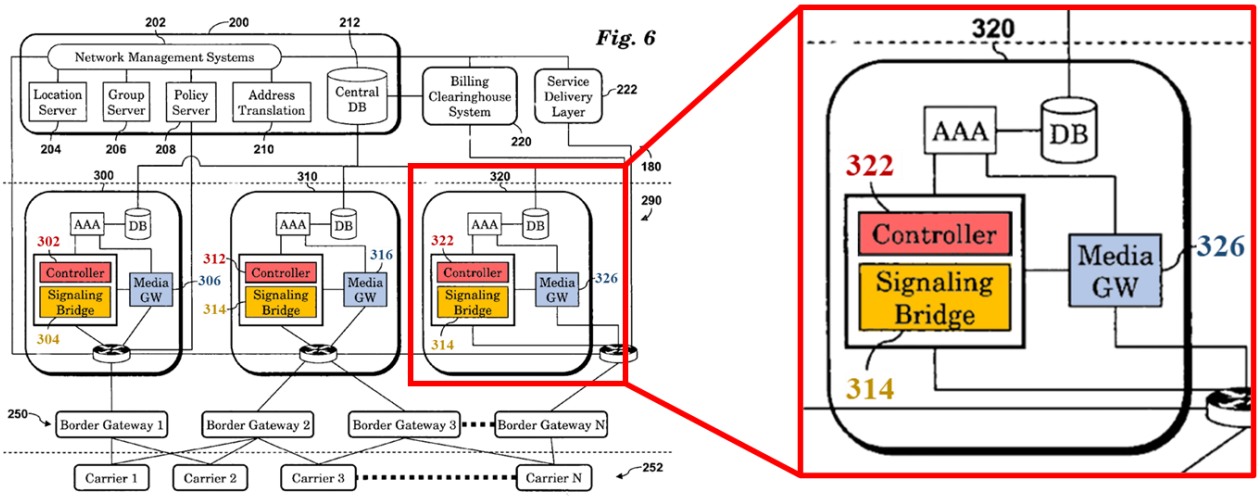
Fig. 6
Network Management Systems
Location Server
Group Server
Policy Server
Address Translation
Central DB
Billing Clearinghouse System
Service Delivery Layer
AAA
DB
Controller
Signaling Bridge
Media GW
Border Gateway 1
Border Gateway 2
Border Gateway 3
Border Gateway N
Carrier 1
Carrier 2
Carrier 3
Carrier N
320
322
326
314

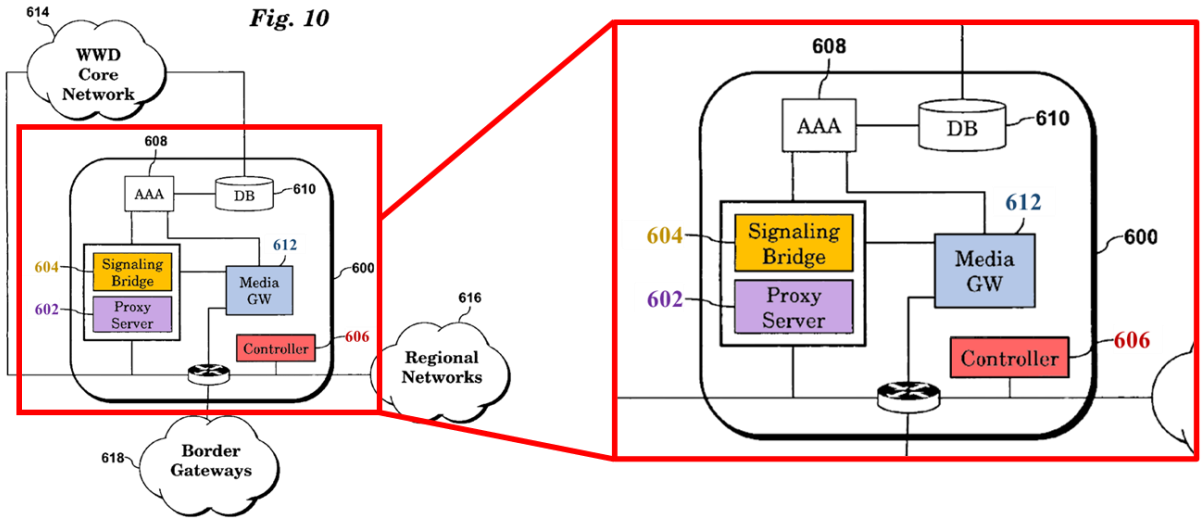
Fig. 10
WWD Core Network
AAA
DB
Signaling Bridge
Proxy Server
Media GW
Controller
Regional Networks
Border Gateways
608
610
612
604
602
600
606
616
618
614

108. *See also*:

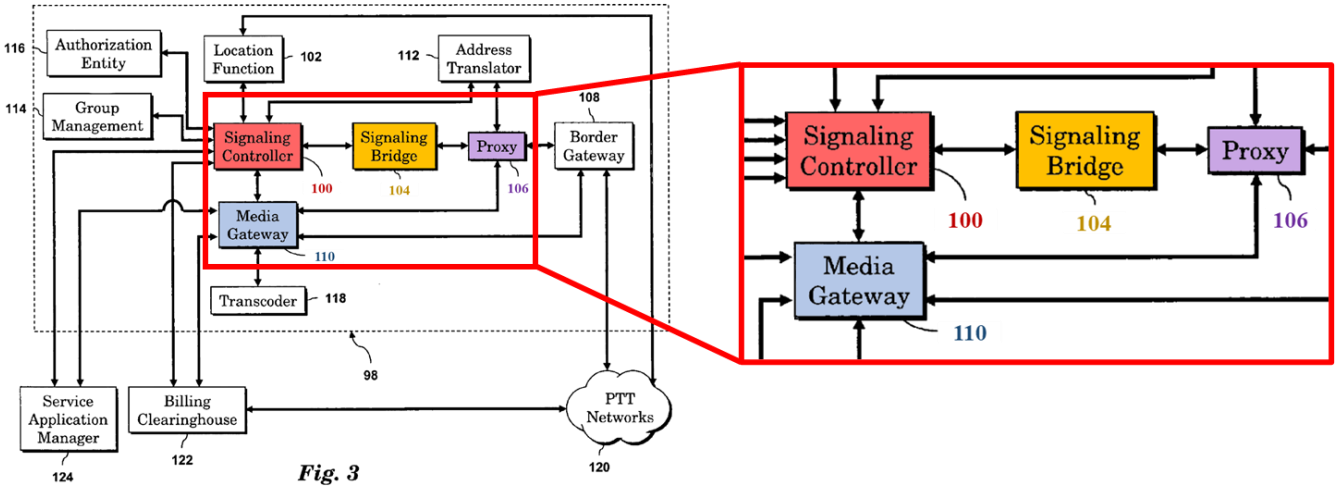

Fig. 3

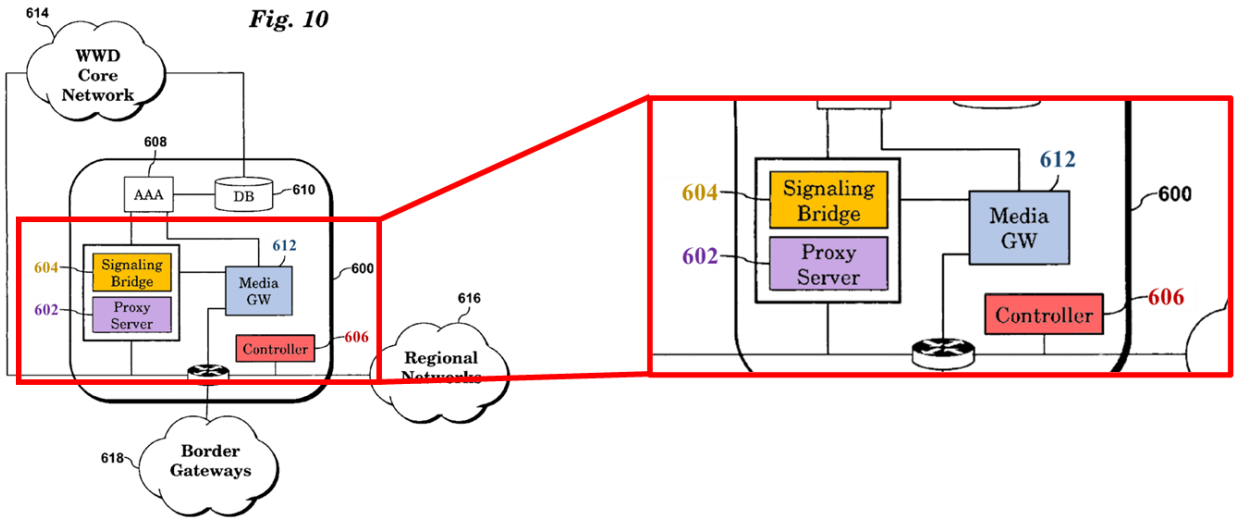

Fig. 10

109. Based on the above, it is my opinion that a POSITA would have found it obvious to combine the features and functions disclosed by Choksi in the physical architectures and flow diagrams of Figures 4 to 13, along with the features and functions disclosed by Choksi in the functional block diagram of Figure 3 and high-level block diagram of Figure 1. *See* EX1005, ¶87 ("It will be appreciated that other session configurations and call flow routing may be implemented within the spirit and scope of the present invention."); *id.* ¶88 (third embodiment "is

similar to the second embodiment illustrated in FIG. 6, but includes a proxy 602”); and *id.* ¶89 (“The core WWD infrastructure includes the components previously described in other embodiments.”).

B. Claim 1

1. [1pre] An apparatus comprising a processor, wherein the processor is configured to:

110. To the extent the preamble is limiting, it is my opinion that Choksi discloses or renders obvious an apparatus (a physical device embodying the WWD architecture 98) comprising a processor—the signaling controller 100:

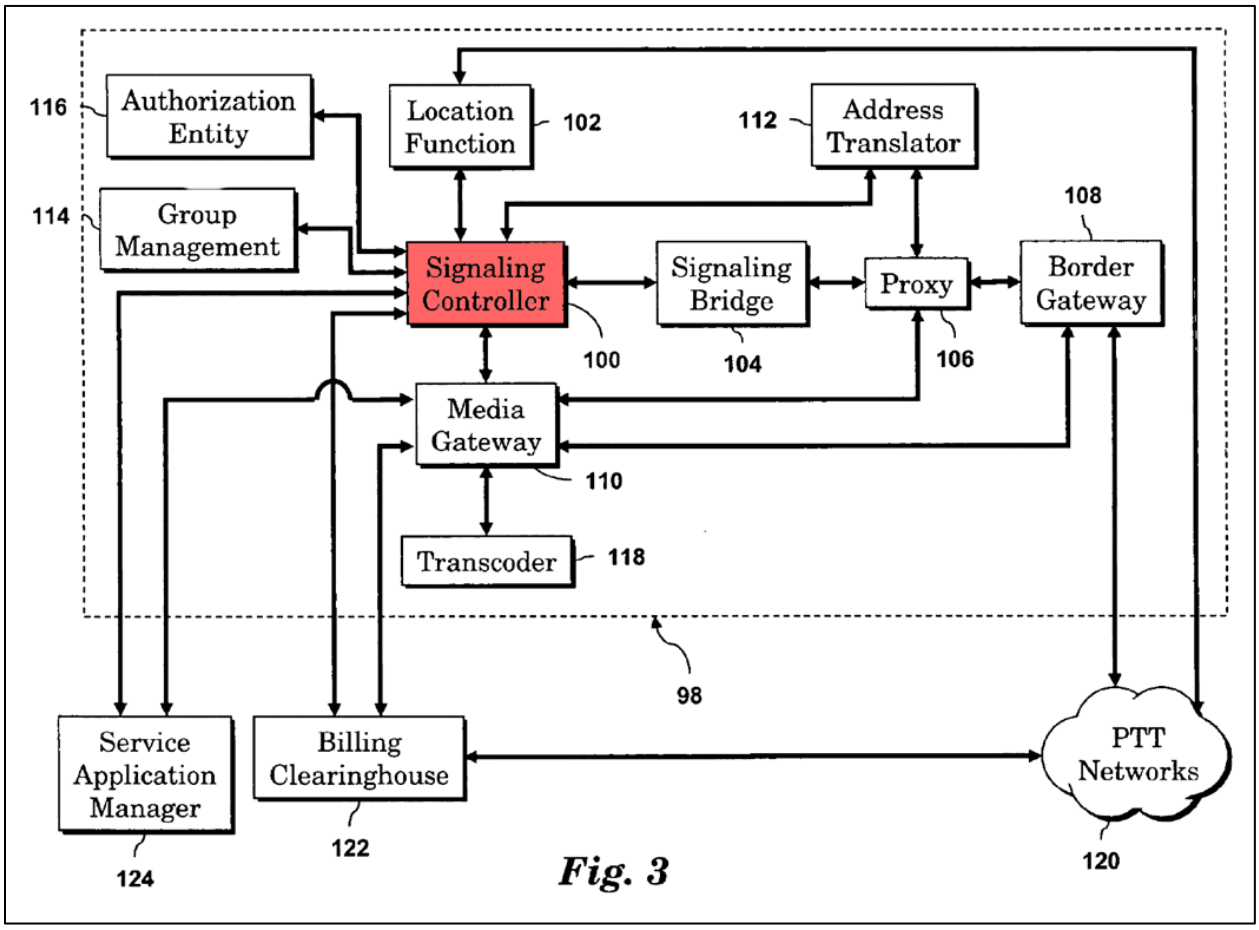

Fig. 3

111. Choksi explains that the "functional components in FIG. 3 are not necessarily individual physical components or software modules, and that one or more components may be combined into a single physical component or software module or distributed across a plurality of physical devices and locations." EX1005, ¶42. Thus, it is my opinion that a POSITA would have recognized that an example of a "physical device" for the signaling controller 100 inherently includes a processor if the signaling controller functionality were implemented as a software module, because software requires a processor for execution. In any event, it is also my opinion that a POSITA would have found it obvious to implement the signaling controller 100 using a processor because the use of processors for executing software was ubiquitous in the art and involved only ordinary skill.

2. [1a] identify information related to an endpoint to obtain identified information; and

112. It is my opinion that Choksi discloses that the signaling controller 100 identifies information related to an endpoint to obtain identified information. For example, Choksi discloses that the signaling controller 100 receives "addresses from [an endpoint on] the calling network" and then determines "whether transcoding is required between the [endpoint on the] calling PTT network and [the endpoint on the] target PTT network" based on the PTT networks used by the calling and target PTT networks. EX1005, ¶43. A POSITA would have

understood from this disclosure in Choksi that the signaling controller 100 identifies the PTT networks of both the initiating endpoint (*i.e.*, obtain identified information) and the target endpoint, or at least identifies the encoding used by the initiating endpoint (which is also identified information) because doing so is a prerequisite to determining whether transcoding is required between the initiating/calling and receiving/target endpoints.

3. [1b] negotiate a communication session with an interoperability server (IS) based in part on at least one of the identified information or a predefined floor control mechanism associated with the IS; and

113. The signaling controller 100 determines the PTT network or at least the encoding used on that network of the initiating endpoint (the claimed "identified information") as discussed in limitation [1a] above, and then negotiates a communication session with an interoperability server based in part on that information. For example, the interoperability server—everything within the green box in Figure 3, below—includes a media gateway 110, which "is interfaced with the signaling controller 100 and is used to setup media paths, exchange media type and type of transcoding to be done by the media gateway 110." EX1005, ¶51. The communications between the signaling controller 100 and the media gateway 110 that result in media paths being established are a negotiation of a communication session.

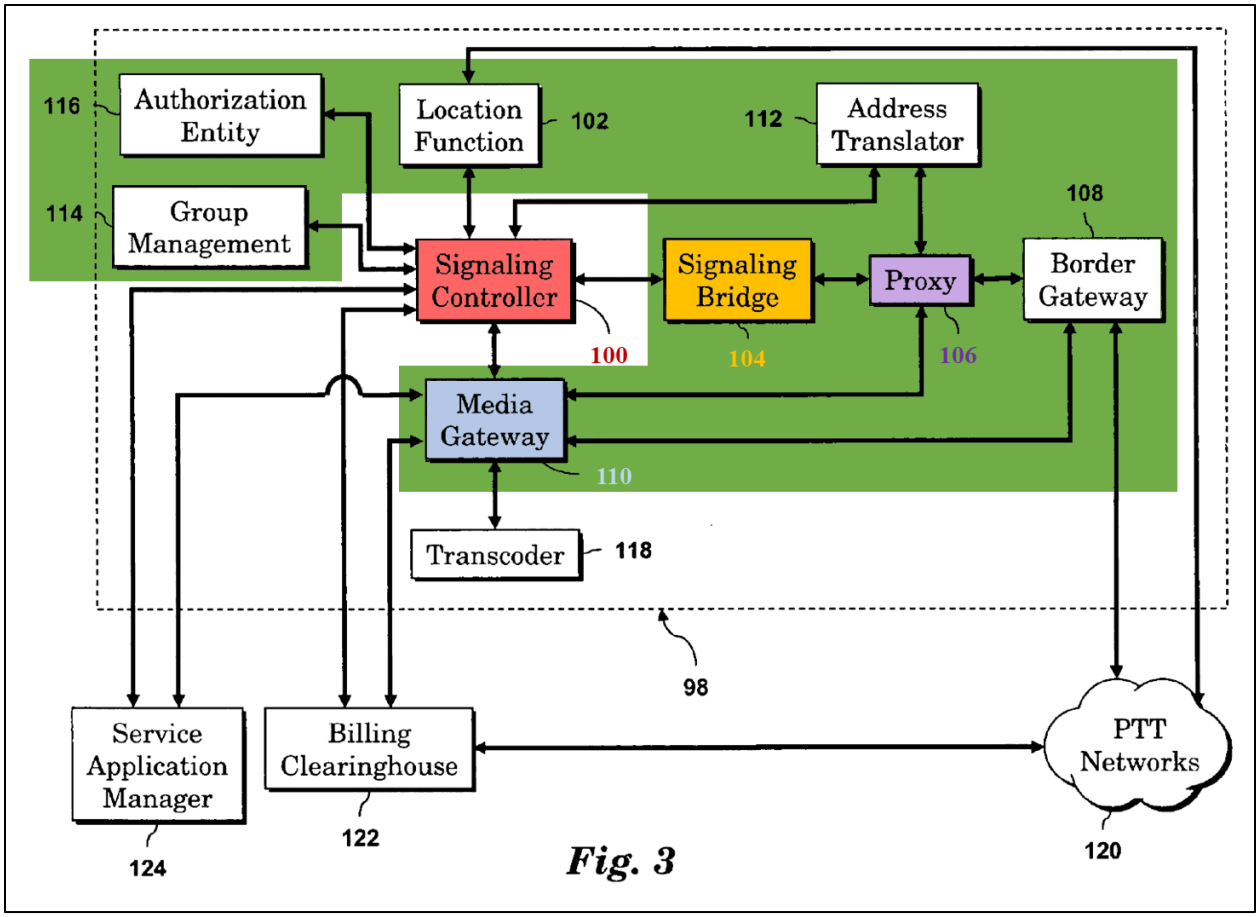

EX1005, Fig. 3.

114. A POSITA would have recognized the green box as the IS because of its similarities to the IS disclosed by the '852 patent. For starters, as shown in Figures 3 and 4 of the '852 patent, below, the IS is simply a collection of different "components"—just like green box in Figure 3 of Choksi, above. More importantly, the '852 patent discloses that the components within the IS are designed to "facilitate communication between different non-compatible communication devices, such as endpoints" (EX1001, 4:56–57; *see also id.* 5:11–

15), which, as I explain above and below, is what the components within the green box of Choksi Figure 3 are designed to do.

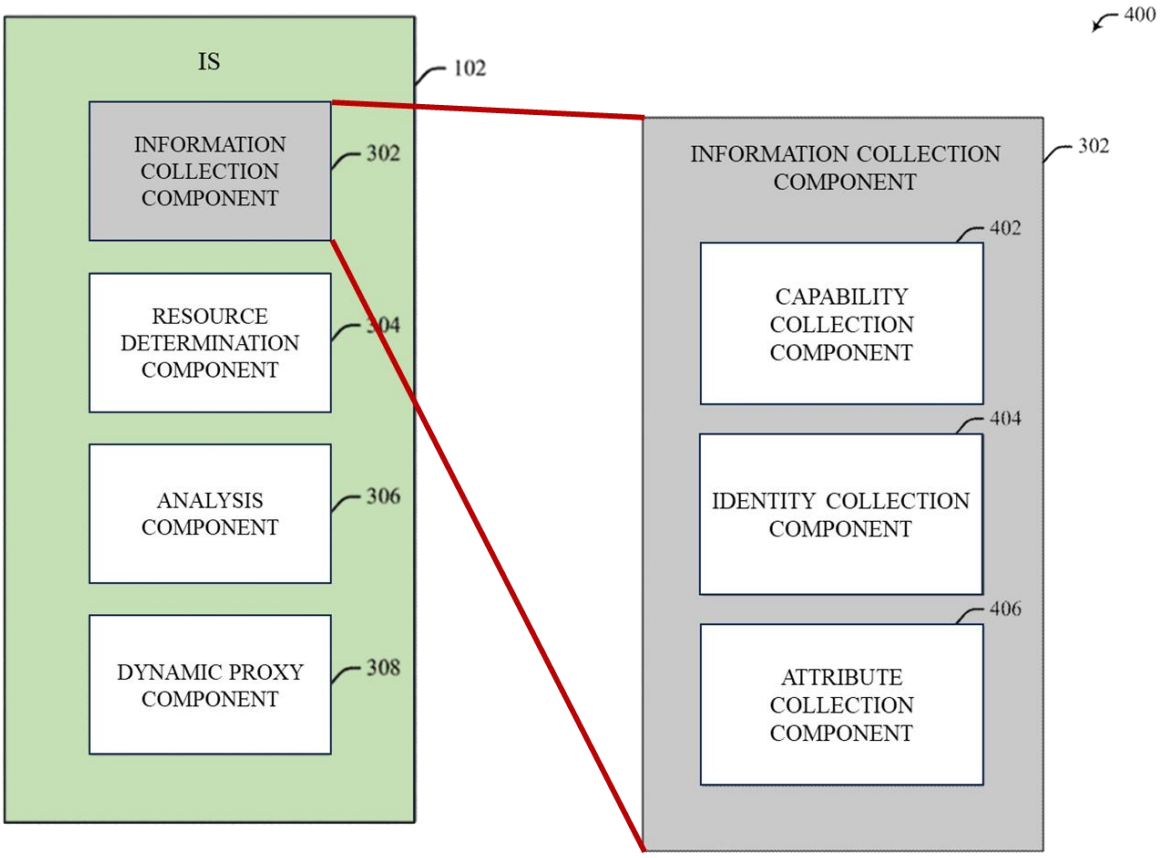

FIG. 3 **FIG. 4**

4. [1c] receive a first determination from the IS that the endpoint is not in adherence with capabilities of the predefined floor control mechanism and that a proxy is to be dynamically inserted to connect the endpoint to a virtual talk group, wherein the capabilities comprise quality of service, rules of transmission and trusted endpoint identity.

115. As explained in section IV.D.1, above, it is my opinion that claim 1c requires receiving a first determination from the IS that (a) the endpoint is not in adherence with capabilities of the predefined floor control mechanism; and (b) a

proxy is to be dynamically inserted to connect the endpoint to a virtual talk group. It is my opinion that Choksi discloses and/or renders obvious both parts (a) and (b) of this limitation.

a. "the predefined floor control mechanism" is associated with the IS

116. As an initial matter, the "the predefined floor control mechanism" part of limitation [1c] must be associated with the IS because "the predefined floor control mechanism" derives its antecedent basis from "a predefined floor control mechanism associated with the IS," in limitation [1b]. Choksi discloses that the predefined floor control mechanism is associated with the IS. For example, Choksi discloses:

> The border gateway 108 hosts the necessary trust relationships and related security associations between the WWD network 98 and the PTT networks 120. In one embodiment, the border gateway 108 performs metering, marking, classifying and ***policing of the traffic traversing the border gateway 108 in both directions*** in accordance with aggregate carrier service level agreements, which may include multiple levels of quality of service including requirements specifying network availability, latency and packet loss rate and service availability and denial and billing accuracy.

EX1005, ¶ 54.

117. As shown in Figure 3, below, the border gateway 108 is part of the IS (everything in the green box); thus, the floor control mechanism is associated with the IS.

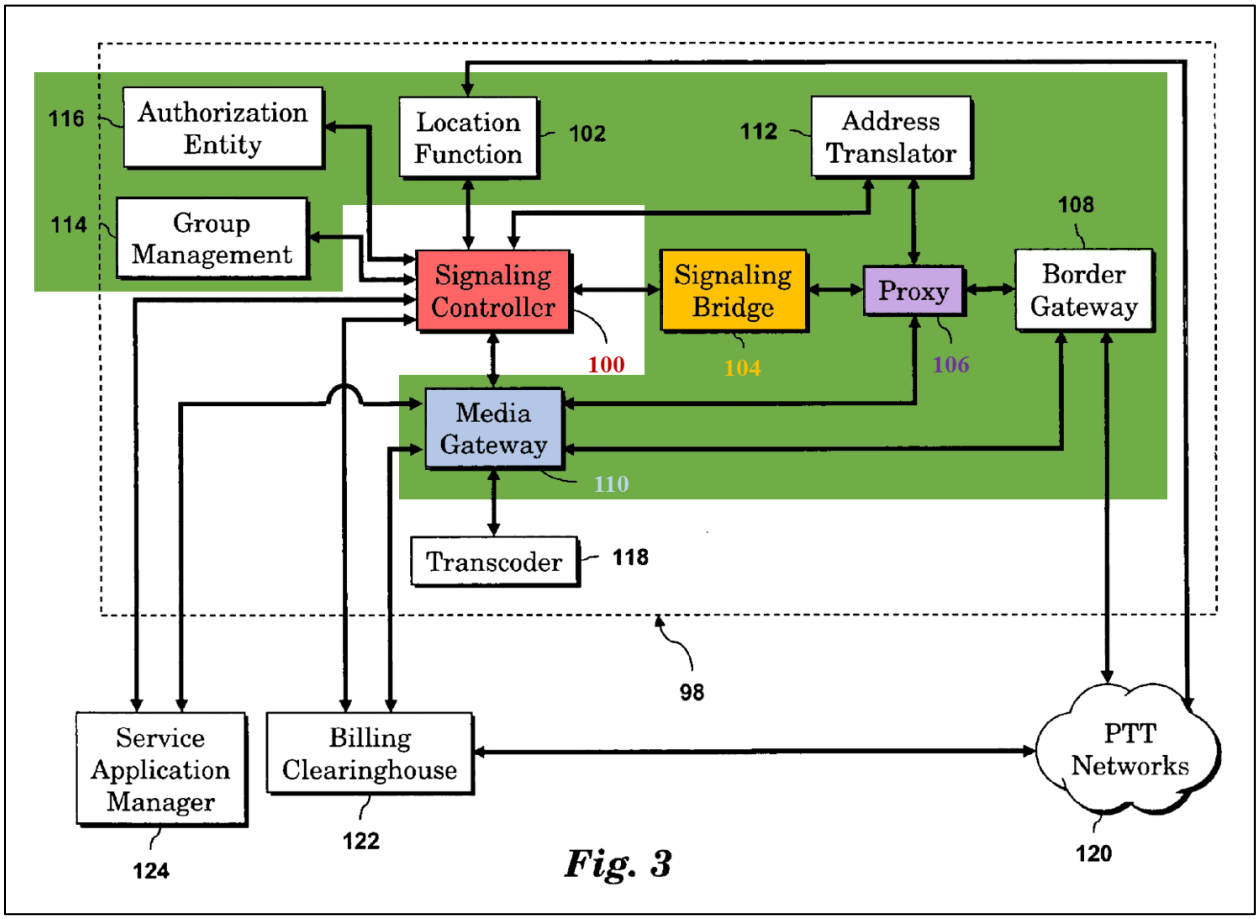

Fig. 3

b. "receive a first determination from the IS that the endpoint is not in adherence with capabilities of the predefined floor control mechanism . . . wherein the capabilities comprise quality of service, rules of transmission and trusted endpoint identity"

118. The signaling controller 100 (the claimed processor) is configured to receive a first determination from the interoperability server that the initiating endpoint is not in adherence with the following three capabilities of the predefined

floor control mechanism: quality of service, rules of transmission, and trusted endpoint identity.

119. **Quality of Service.** Choksi discloses that "[t]he media gateway 110 is interfaced with the signaling controller 100 and is used to setup media paths, exchange media type and type of transcoding to be done by the media gateway 110." EX1005, ¶51. "The MEGACO (media gateway control) protocol with enhancements may be used for this interface." *Id.* One aspect of the MEGACO protocol is that the media gateway controller (which a POSITA would have understood to be signaling controller 100) sets quality of service standards for the connection between an initiating endpoint and the media gateway (*i.e.*, media gateway 110). *See* EX1022, at 253 and EX1023, at 10. The media gateway is further required to report to the media gateway controller (*i.e.*, the signaling controller 100) when the quality-of-service standards set by the media gateway controller (which is part of the IS) are not being maintained by a connected endpoint (*i.e.*, sending a first determination that quality of service is not being maintained by the initiating endpoint). *See id*; *see also, e.g.*, EX1026 (U.S. Patent Application Publication No. 2003/0231639), ¶2 ("Megaco is used between the media gateway and the MGC [media gateway controller] for resource reservations, connection settings, media transformation settings, signal/event indications and

processing, quality of service (QoS) settings, sending statistics information and signaling control.”).

120. **Rules of Transmission.** A POSITA would have understood “rules of transmission” to include restrictions on and/or requirements of the PTT technology format (*e.g.*, signaling and media format) used by an initiating endpoint to communicate with or within a virtual talk group. My opinion is based on the plain meaning of the phrase “rules of transmission,” which simply indicates that there are restrictions on and/or requirements on how and what transmission can be performed. In a PTT environment, what is transmitted, and how something is transmitted, is based on the underlying PTT technology of the PTT devices.

121. Choksi discloses the “rules of transmission” part of limitation 1c by disclosing that the proxy 106—which is part of the IS (everything in the green box in Figure 3, below)—sends a first determination to signaling controller 100 (the claimed processor) that the format of requested PTT session will need to be translated by the signaling bridge 104 for the duration of the PTT session. More specifically, Choksi discloses that “proxy 106 analyzes incoming session requests” to determine if the same or different PTT technologies are used by the initiating and receiving endpoints. EX1005, ¶¶46, 69. The proxy 106 can make this determination based on the “PTT protocol type information embedded in the session header.” *Id.* ¶¶45–46. In some cases, the session header is “based on SIP

(session initiation protocol), with extensions added as necessary to facilitate the communications described [in Choksi]." *Id.* ¶45–46.

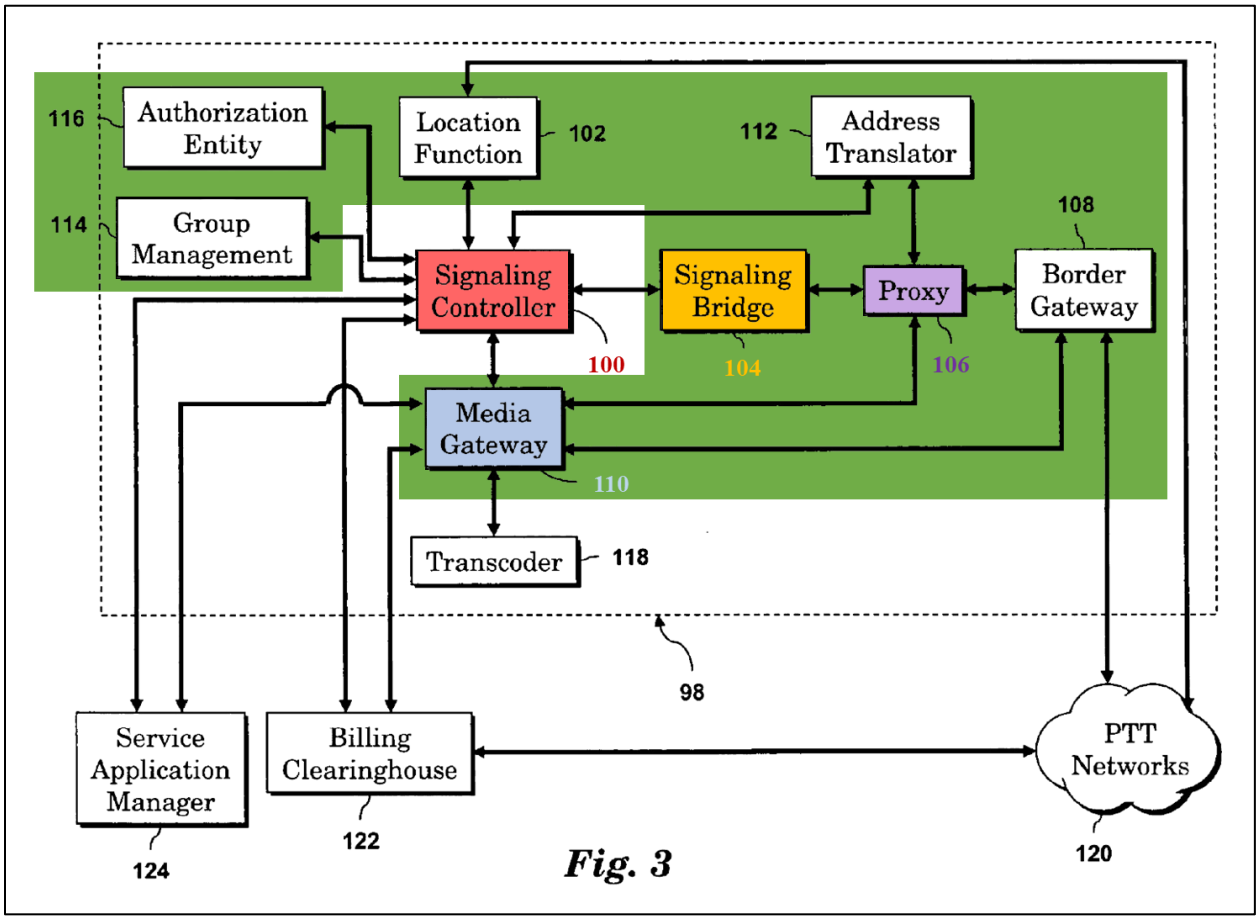

EX1005, Fig. 3.

122. Based on Choksi's disclosure, it is my opinion that a POSITA would have understood the proxy 106 to be adding an extension to the session header for the signaling bridge 104 and/or the media gateway 110 indicating signaling translation and/or media translation is required. *See, e.g.*, EX1005, ¶¶45–46. Alternatively, it was well-known in the art at the time of the invention to add extensions to SIP headers and, thus, would have been obvious to a POSITA for

proxy 106 to add an extension to the session header indicating to the signaling bridge 104 and/or the media gateway 110 that signaling and/or media translation is required. EX1005, ¶¶45–46; EX1020 (B. Campbell *et al.*, *Session Initiation Protocol (SIP) Extension for Instant Messaging*, RFC 3428 (Dec. 2002); EX1021 (RFC3428 Approved as Proposed Standard (2002)). Either way, the signaling controller 100 will be informed based on the extension in the session header that the initiating endpoint does not conform with the rules of transmission since signaling translation and/or media translation would need to be employed.

123. **Trusted Endpoint Identity.** A person of ordinary skill in the art would have understood "trusted endpoint identity," as used in the '852 patent, to include determining whether an initiating endpoint can be trusted to join the virtual talk group based on its identity. For example, the '852 patent explains that "[a]t [step] 706, a decision can be made if the device is allowed to join a VTG based on its identity. If the device identity is determined to be untrusted or malicious the device cannot be allowed to join the VTG and the request can be rejected at 708." EX1001, 11:44–48.

124. Choksi discloses an "authorization entity 116 [that] is connected to the signaling controller 100 and operates to manage call restrictions and authorization data for roaming subscribers and session requests to and from subscribers to applications from the service application manager 124." EX1005, ¶48; *see also id.*

¶43 ("It is further contemplated that the signaling controller 100 may perform admission control."); *id.* ¶43 ("The signaling controller 100 may also host and manage sessions for roaming subscribers and locate users in a WWD roaming database."). It is my opinion that a POSITA would have understood that the authorization entity 116 is providing authorization information (*i.e.*, information on whether an initiating endpoint is authorized and/or trusted) to the signaling controller 100, including information indicating that an endpoint is not trusted.

c. "receive a first determination from the IS … that a proxy is to be dynamically inserted …"

125. The signaling controller 100 also receives a first determination that the signaling bridge 104 (the claimed proxy) is to be dynamically inserted to connect the initiating endpoint to a virtual talk group. For example, Choksi explains that the "signaling bridge 104 converts session and signaling messages from one PTT technology to another." EX1005, ¶45. The proxy 106—which is part of the interoperability server—is responsible for "analyz[ing] incoming session requests to determine whether the originating and terminating PTT networks use the same PTT technology." *Id.* ¶45. "If different [PTT] technologies are used, then the session is routed [by the proxy 106] to the signaling bridge 104 for translation;" otherwise the signal goes directly to the signaling controller 100. *Id.* ¶46. "[T]he proxy 106 may make routing decisions based on PTT protocol type information embedded in the session header." *Id.* ¶46.

126. A POSITA would have considered the signaling bridge 104 (the claimed "proxy") "dynamically" inserted because the signaling bridge 104 performs a translation in response to a determination by proxy 106 that translation is required—the signaling bridge is not always used, as shown in Figure 12, below.

> In step 624, if the PTT session requires translation then the proxy 602 routes the session to the signaling bridge 604 where it is converted to a common WWD protocol in step 626. In step 628, transcoders are selected for the PTT session, and then address and name translation is then performed via the controller 606 and the WWD core network 614 in step 630. If the session does not require translation then the proxy 602 bypasses steps 626 and 628.

EX1005, ¶90.

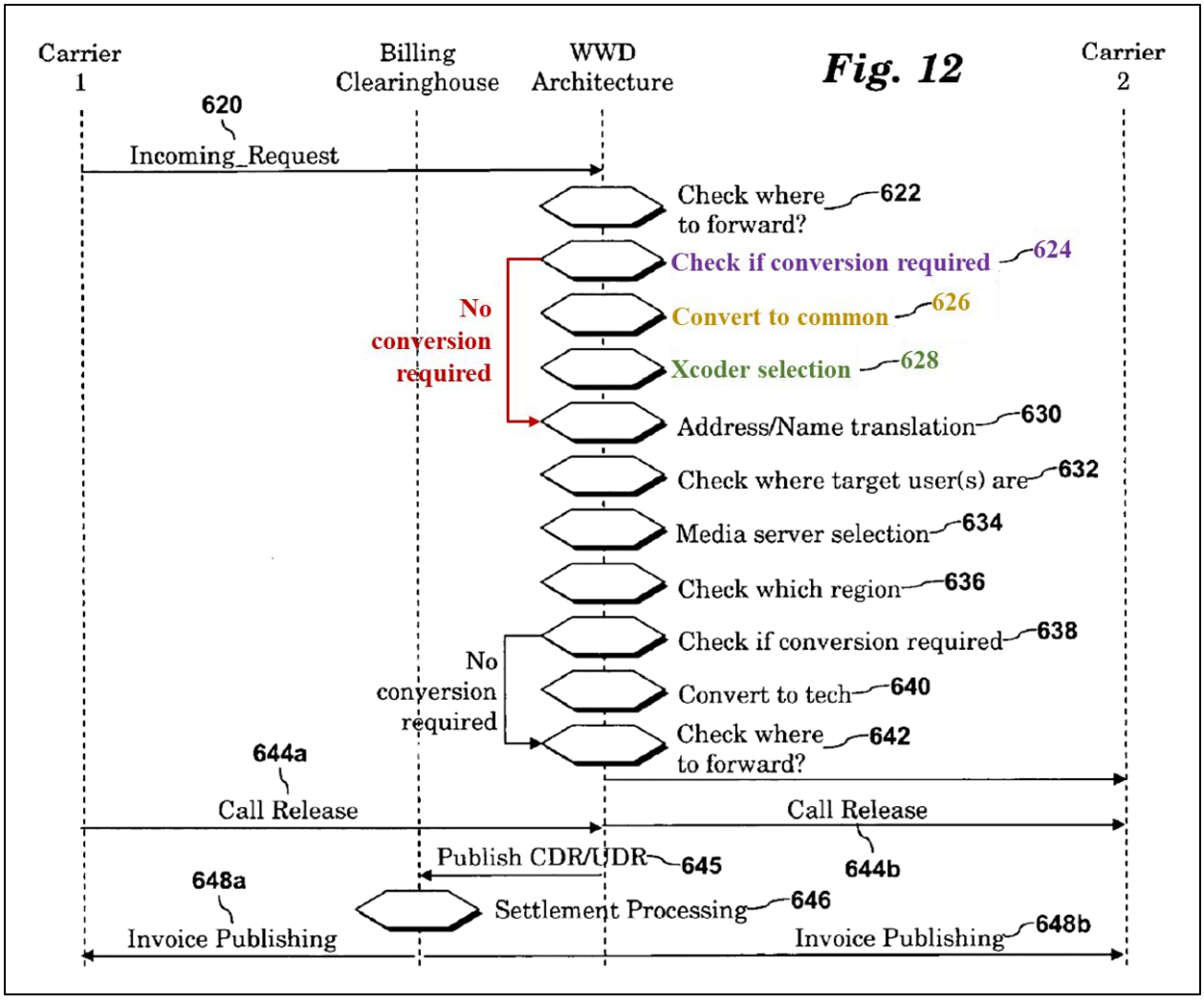

EX1005, Fig. 12.

127. A POSITA would also have understood the signaling controller 100 receives the determination that the signaling bridge 104 (the claimed proxy) is to be inserted for the rest of the session. After the proxy 106 determines that translation is required based on the PTT protocol type information embedded in the session header, the proxy 106 forwards the session request to the signaling bridge 104 for translation into a common format that the signaling controller 100 can understand.

128. A POSITA would have understood that the proxy 106 is determining that the PTT protocol type embedded in the header of the session request is indicative of the PTT protocol type used by the session request and that the PTT protocol type of the session request is different from the PTT protocol type used by the signaling controller 100. The signaling bridge 104 translates the session request into a common format that the signaling controller can understand. EX1005, ¶45. In some cases, the "common network protocol is based on SIP (session initiation protocol), with extensions added as necessary to facilitate the communications described herein [in Choksi]." *Id.* The signaling controller 100 then receives the translated message in a PTT protocol type (*e.g.*, SIP) that is different from the PTT protocol type information embedded in the session header. *Id.* By receiving the session request in a PTT protocol type different from the PTT protocol type embedded in the session header, the signaling controller 100 is informed that translation is required and that the signaling bridge 104 (the claimed proxy) is to be inserted.

C. Claim 2. The apparatus of claim 1, wherein the processor is further configured to identify media capabilities associated with the endpoint, the media capabilities employed by the IS to dynamically determine if the endpoint should be connected to the virtual talk group via the proxy.

129. As I explained in section VI.B, Choksi discloses the apparatus of claim 1.

130. It is my opinion that Choksi also discloses "the processor is further configured to identify media capabilities associated with the endpoint." For starters, it is my opinion that a POSITA would have understood "media capabilities associated with the endpoint" to include the types of media formats that an endpoint could process, send, and/or receive. My opinion is based on the plain meaning of the phrase "media capabilities," as well as the statements of the '852 patent's examiner. In particular, during prosecution, the examiner rejected the '852 patent based on U.S. Patent Application Publication No. 2007/0036100 ("Shaffer1") (EX1027). The examiner cited to paragraphs 26–27, 54–56, 64, 93–94, 96 of Shaffer1 as disclosing "further comprising a capability determination component ***that identifies media capabilities associated with the endpoint***, the media capabilities employed by the IS to dynamically determine if the endpoint should be connected to a virtual talk group (VTG) via a proxy." EX1003, 47–48; *see also id.* 48. Paragraphs 26–27, 54–56, 64, 93–94, 96 of Shaffer1 each discuss how an endpoint is unable to process, send, and/or receive certain media types. EX1027, ¶¶26–27, 54–56, 64, 93–94, 96. Thus, the examiner appears to have also understood "media capabilities associated with the endpoint" to include the types of media formats that an endpoint could process, send, and/or receive.

131. It is also my opinion that a POSITA would have understood "media" to include voice files. *See, e.g.*, EX1018 (Newton's Telecom Dictionary (22nd Ed.

2006)), at 579 (defining "media type:" "A call's media type describes what type of information the call is carrying, such as data or voice.").

132. Choksi discloses that the signaling controller 100 is interfaced with the media gateway 110 and that the signaling controller 100 instructs the media gateway 110 to allocate the necessary resources to handle the PTT session. EX1005, Figs. 3, 9a, ¶¶51, 69, 79. Because the signaling controller 100 is instructing the media gateway 100 to allocate resources for the PTT (push-to-talk) session, it would have been obvious, in my opinion, to a POSITA that the signaling controller 100 (the claimed processor) has identified (and is, thus, configured to identify) at least the voice capability (the media capability) of the endpoint.

133. Choksi further discloses that "the media capabilities [of the endpoint are] employed by the IS to dynamically determine if the endpoint should be connected to the virtual talk group via the proxy." Choksi first explains that proxy 106 knows the media format used by the originating endpoint—because the proxy 106 can "route[] sessions to the media gateway 110 when … media translation is required (due to different media formats being used between PTT networks)." *Id.* ¶46. In order for the proxy 106 to know that different media formats are used by the originating and ending PTT networks, the proxy 106 must know the media formats used by the originating and ending PTT networks. It would have been obvious to a POSITA that the originating and ending endpoints use the same media

format as their respective PTT network. And by routing the session to the media gateway 110 when media translation is required, the proxy 106 (which is part of the claimed interoperability server) is dynamically determining that the endpoint should be connected to the virtual talk group via a proxy (the part of the media gateway 110 responsible for translation).

D. Claim 3. The apparatus of claim 2, further comprising a transmitter, wherein the transmitter transmits data to the virtual talk group if it is determined that the proxy is not employed to connect the endpoint to the virtual talk group.

134. As I explained in section VI.C, above, it is my opinion that Choksi discloses the apparatus of claim 2.

135. It is also my opinion that Choksi inherently discloses that the apparatus has a transmitter—Choksi discloses that messages and signals are transmitted from the signaling controller(s), as shown in Figure 9a, below. Alternatively, it would have been obvious to a POSITA that the apparatus included a transmitter because the apparatus was meant to send signals to and receive signals from PTT systems, and it was well known in the art at the time of the invention that apparatuses meant to send and receive signals within a PTT system included a transmitter. *See, e.g.*, EX1024, ¶33, Fig. 2.

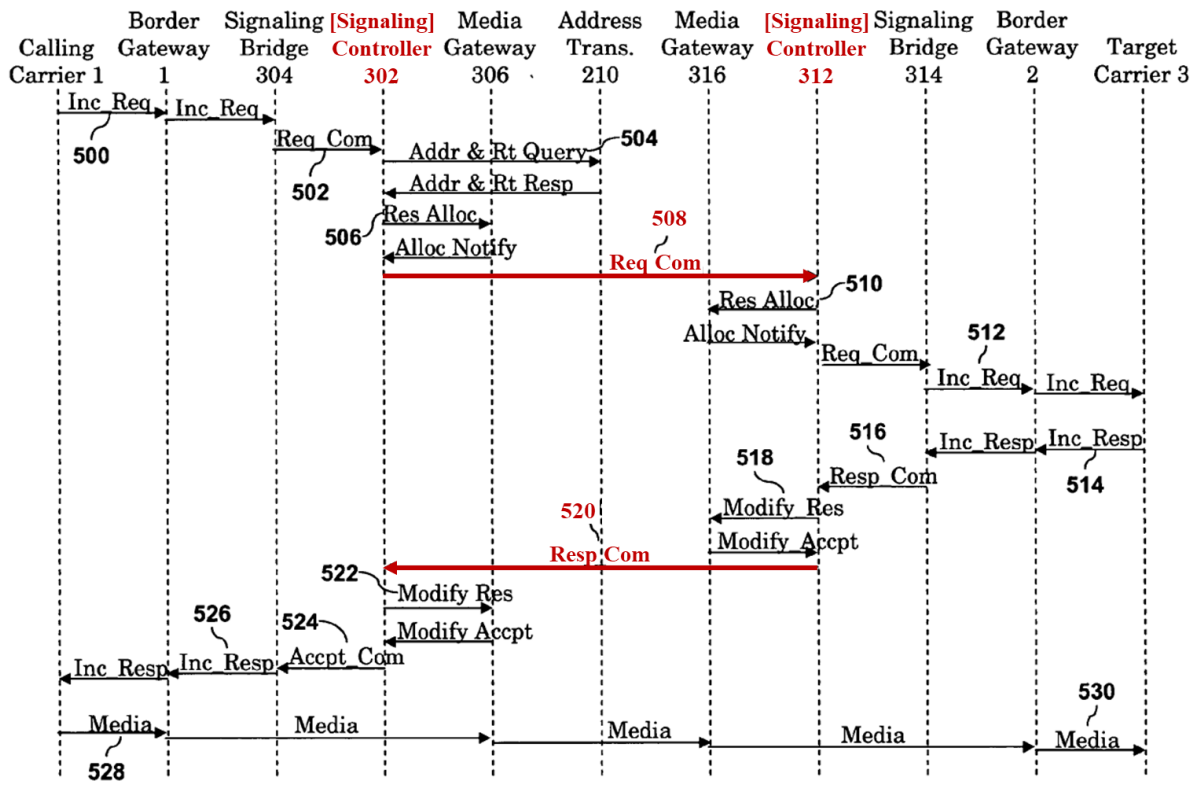

Fig. 9a

See also EX1005, ¶78 ("The controller 302, based on the received routing information, transmits the request 508 to controller 312.").

136. Choksi further discloses "wherein the transmitter transmits data to the virtual talk group if it is determined that the proxy is not employed to connect the endpoint to the virtual talk group." Choksi explains that "[i]f the session does not require translation then the proxy 602 bypasses" translation by the signaling bridge 104 (*i.e.*, the claimed proxy/signaling bridge 104 is not inserted by Choski's proxy 602). EX1005, ¶90. While not expressly stated, a POSITA would have understood from the silence in paragraph 90 that the media gateway 110 is also not

performing translation (*i.e.*, the claimed proxy is not inserted by the media gateway 110). *See also* EX1005, ¶46 ("If the same PTT technology is used then the proxy 106 facilitates communication without translation."). The signaling controller then transmits, as shown in Figure 9a, above. It would have been obvious to a POSITA that the messaging pattern disclosed by Figure 9a would apply to the embodiment described in paragraph 90—Figure 9a describes the second embodiment and paragraph 90 describes the third embodiment; the third embodiment is "similar to the second embodiment … but includes a proxy [106]." EX1005, ¶¶17, 77, 88.

E. Claim 4. The apparatus of claim 2, further comprising a transmitter, wherein the transmitter transmits data to the proxy over a private channel if it is determined that the proxy is employed to connect the endpoint to the virtual talk group.

137. As I explained in sections VI.C and VI.D above, it is my opinion that Choksi discloses the apparatus of claim 2 further comprising a transmitter.

138. Choksi also discloses that the transmitter transmits data to the proxy over a "private channel" if it is determined that the proxy is employed to connect the endpoint to the virtual talk group. For example, Choksi discloses that when the signaling controller receives a response message from the receiving endpoint, the signaling controller forwards the response message to the signaling bridge for translation into the format of the originating endpoint. EX1005, ¶70. It would have been obvious to a POSITA that, since the signaling controller 100 uses SIP as the common format for communicating between endpoints/carriers, the response

message to the session request contains a route-record header indicating that the response message needs to be sent back through the signaling bridge 104 for translation before being sent to the originating endpoint/carrier. *See also* §VII.D.4.b (ground 2, claim 1c; explaining the operation of the route-record header used in SIP).

139. Moreover, as shown by the red arrow in Figure 3, below, the messages between the signaling controller 100 (the claimed processor) and the signaling bridge 104 (the claimed proxy) are sent over a private channel:

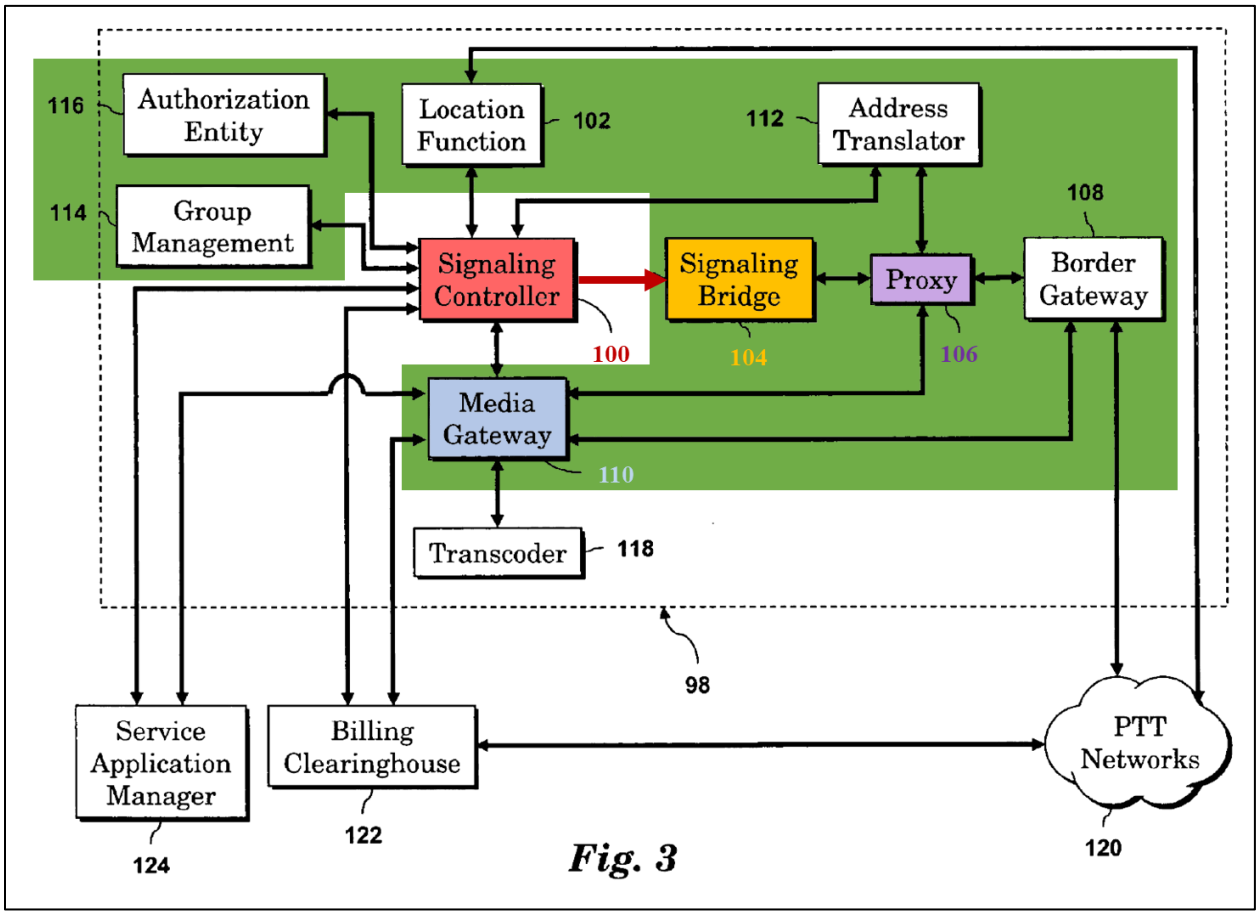

Fig. 3

F. Claim 5. The apparatus of claim 1, wherein the processor is further configured to determine an identity associated with the

endpoint, the identity employed by the IS to dynamically determine if the endpoint should be connected to the virtual talk group via the proxy.

140. As I explained in section VI.B, above, it is my opinion that Choksi discloses the apparatus of claim 1.

141. According to the ’852 patent, an example of an “identity associated with [an] endpoint” is the endpoint’s IP address and/or its capabilities. EX1001, 6:8–13. Choksi discloses that signaling controller 100 can make a determination whether transcoding is required based on the PTT networks of the initiating and target endpoints. EX1005, ¶¶43–44. Thus, the signaling controller knows the PTT network of the initiating and target endpoints. A POSITA would have understood the PTT network of an endpoint, such as the initiating endpoint, to be indicative of the endpoint’s capabilities—because a PTT network supports certain capabilities and not others. Thus, signaling controller 100 (the claimed processor) is configured to determine the identity associated with an endpoint.

142. For the same reasons I explained in section VI.B.4 (claim 1c), above, the PTT network of the initiating endpoint is employed by the by the IS to dynamically determine if the endpoint should be connected to the virtual talk group via the proxy.

G. Claim 8

1. [8pre] A method comprising:

143. To the extent the preamble is limiting, Choksi discloses a method. *See, e.g.*, EX1005, ¶¶2–5.

2. [8a] initiating communication with a non-compatible communication device; identifying information associated with an initiating device; and

144. A POSITA would have understood "initiating communication with a non-compatible communication device" to include the initiating endpoint initiating a call (*e.g.*, PTT session) to a receiving endpoint that uses different technology (e.g., PTT technology) than the initiating endpoint (the target endpoint thus being "a non-compatible communication device). A POSITA would recognize that claim 8 already mentions "an initiating device," leading a POSITA to have understood "non-compatible communication device" as referring to something other than the initiating device.

145. Choksi discloses "initiating communication with a non-compatible communication device." *See* EX1005, Figs 8a (showing initial communication with "Target Carrier," 8b (same), 9a (same), 9b (showing initial communication with "Target Mobile").

146. For the same reasons I explained in section VI.B.2 (claim 1a), above, Choksi discloses "identifying information associated with an initiating device."

3. [8b] negotiating a communication session with an interoperability server (IS) based in part on at least one of the identified information or a predefined floor control mechanism associated with the IS; and

147. For the same reasons I explained in section VI.B.3, Choksi discloses this limitation.

4. [8c] receiving a first determination from the IS that the initiating device is not in adherence with capabilities of the predefined floor control mechanism and that a proxy is to be dynamically inserted to connect the initiating device to a virtual talk group, wherein the capabilities comprise quality of service, rules of transmission and trusted endpoint identity.

148. For the same reasons I explained in section VI.B.4 (claim 1c), above, Choksi discloses this limitation.

H. Claim 9. The method of claim 8, wherein the information associated with the initiating device includes at least one of media capability information associated with the initiating device or an identity of the initiating device.

149. As I explained in section VI.G, Choksi discloses the method of claim 8. And for the same reasons I explained in section VI.C (claim 2), Choksi discloses the rest of claim 9.

I. Claim 10. The method of claim 8, further comprising transmitting media to the proxy over a private network through custom messages if it is evaluated that the proxy is employed.

150. As I explained in section VI.G, above, Choksi discloses the method of claim 8.

151. The ’852 patent uses “private network” interchangeably with “private channel.” *Compare* EX1001, 12:23–25 (“media can be transmitted to the proxy over a private network through custom messages at 812”) (emphasis added) *with id.* Fig. 8 (showing “transmit data to proxy over a private channel” as step 812) (emphasis added). A POSITA would also have understood “private network” to refer to “private line” (a/k/a “private channel”). *See, e.g.*, EX1018 (Netwon’s Telecom Dictionary (22nd Ed. 2006)), at 729 (synonymizing “private network” with “private line”). Thus, Choksi discloses everything in claim 10 except “through custom messages” for the same reasons that I explained, in section VI.E, Choksi discloses claim 4.

152. It is my opinion that Choksi discloses “transmitting media to the proxy over a private network through custom messages.” A POSITA would have understood “custom messages” to include messages specifically designed for communicating between two devices. Choksi discloses that “[t]he signaling bridge 104 is interfaced with the signaling controller 100, which uses the interface to exchange signaling messages with the signaling bridge 104 in a common format.” EX1005, ¶45. In other words, there is a specifically designated communication format for use between the signaling bridge 104 (the claimed proxy) and signaling controller 100 (the claimed processor).

J. Claim 11. The method of claim 8, further comprising, attaching the initiating device directly to the virtual talk group and

transmitting media directly to the virtual talk group if the proxy is not employed to attach the initiating device to the virtual talk group.

153. As I explained in section VI.G (claim 8), Choksi discloses the method of claim 8. And for the same reasons I explained in section VI.D (claim 3), Choksi discloses the rest of claim 11.

VII. GROUND 2: SHAFFER IN VIEW OF KELLER AND THE KNOWLEDGE OF A POSITA RENDERS OBVIOUS ALL CHALLENGED CLAIMS

A. Introduction

154. Shaffer's specification is identical to the disclosure of the '852 patent, exclusive of the claims. Not surprisingly, Shaffer discloses most limitations of the Challenged Claims other than the First Determination Limitation—which is disclosed by Keller. Thus, it is my opinion that the combination of Shaffer and Keller renders all Challenged Claims obvious as discussed in detail below.

B. Motivation to Combine Shaffer and Keller

155. Shaffer's goal was to provide a way for non-compatible endpoints to work with the "standards-based IP technologies" used by interoperability systems. EX1016, ¶2. However, Shaffer does not disclose a specific standards-based signaling technology. By 2008, SIP was a well-known and established "standards-based IP technolog[y]" used for signaling in PTT, and other voice and/or multimedia, communications systems. Thus, a POSITA would have looked for an example of such a system, like that disclosed by Keller—which discloses an

example of a standards-based signaling technology, SIP, in a PTT system. As such, a POSITA would have found it obvious to combine Keller's SIP-based PTT system with Shaffer's more general "standards-based IP" interoperability system. Doing so would have been seen by a POSITA as nothing more than a combination of known elements according to their established functions to achieve an expected result, and would been considered to constitute nothing more than a routine engineering task that was well within the skill level of a POSITA.

C. Motivation to Combine Embodiments of Shaffer

156. Figures 1 to 6 of Shaffer, and their corresponding disclosure in the specification, disclose interrelated embodiments, as shown below, with the components in each of the so-called embodiments just providing additional detail for the components presented in other figures:

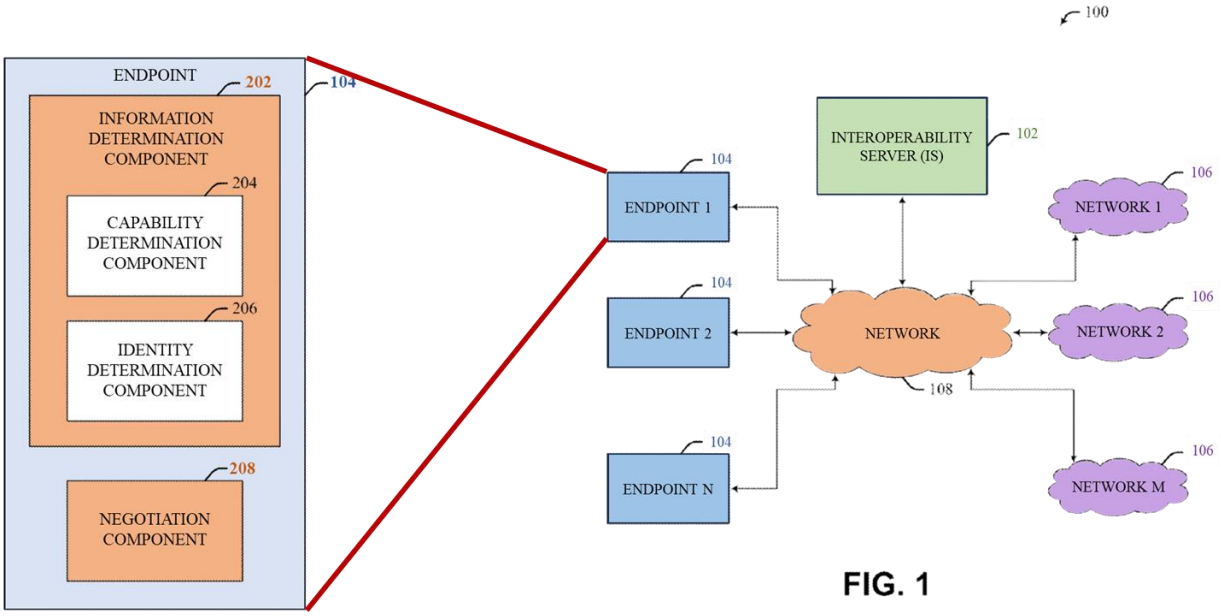

FIG. 2

FIG. 1

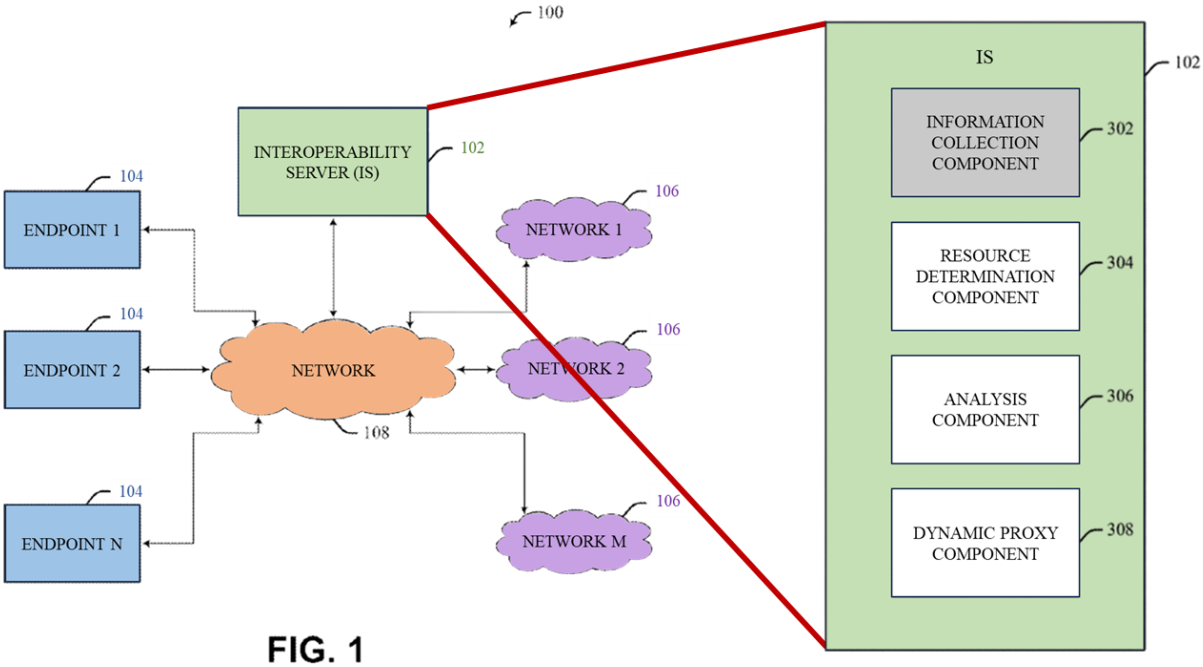

FIG. 1

FIG. 3

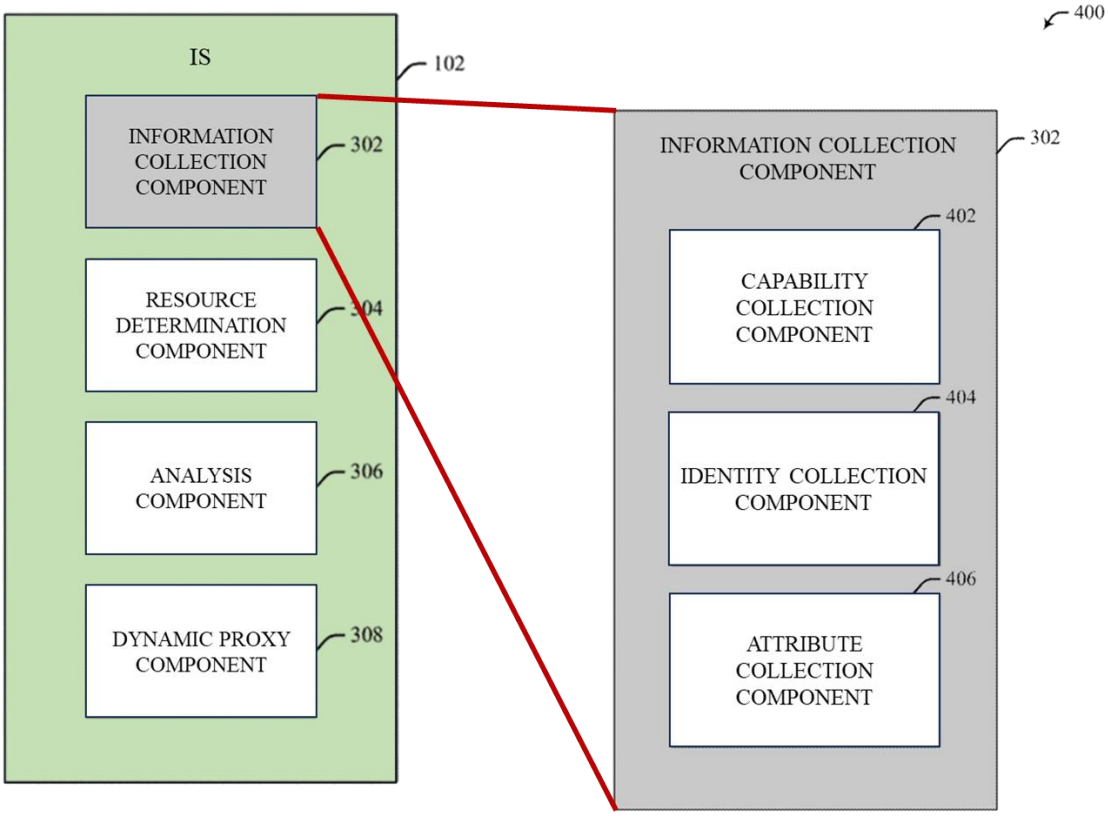

FIG. 3

FIG. 4

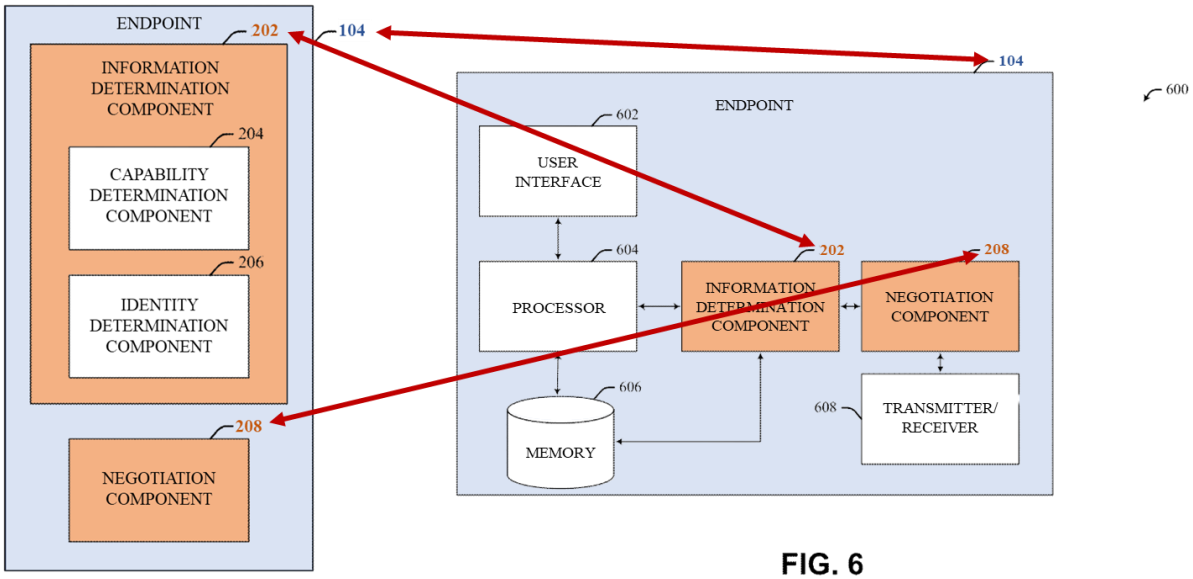

FIG. 2

FIG. 6

157. As such, it would have been obvious to a POSITA to combine each of Figures 1 to 6, and their corresponding disclosure in the specification, since each so-called embodiment is merely providing additional detail of how certain components work.

D. Claim 1

1. [1pre] An apparatus comprising a processor, wherein the processor is configured to:

158. To the extent the preamble is limiting, Shaffer discloses or renders obvious an apparatus (*e.g.*, endpoint 104) comprising a processor (*e.g.*, information determination component 202 and negotiation component 208), as shown in Figure 6, below:

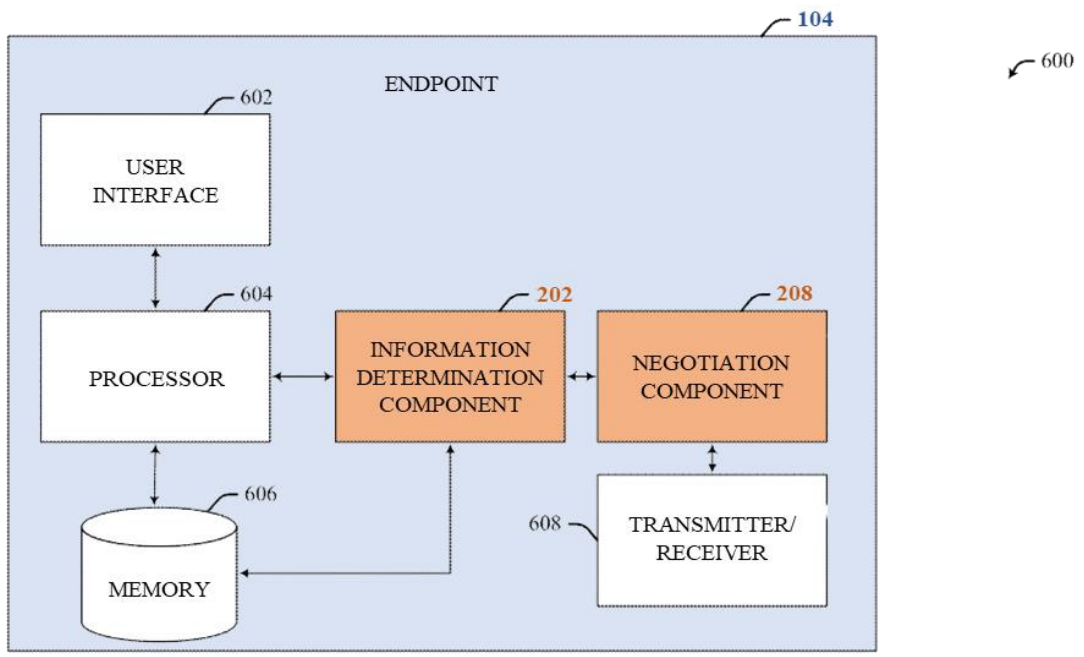

FIG. 6

EX1016, Fig. 6.

159. Shaffer defines "component" (such as the information determination component 202 and negotiation component 208) to include processors, processes, and programs (EX1016, ¶22); thus, a POSITA would have understood and/or found it obvious for both information determination component and negotiation component to be implemented on the same processor. For example, a POSITA would have found it obvious to implement the information determination component 202 and negotiation component 208 as software components, or modules, that execute on the processor 604, or on a separate processor in the endpoint.

2. [1a] identify information related to an endpoint to obtain identified information; and

160. Shaffer discloses that the information determination component 202 of the processor is configured to identify information related to an endpoint and to obtain identified information. EX1016, Fig. 6, ¶¶32 ("[T]he endpoint 104 can include an information determination component 202 that can be employed to determine information related to the endpoint 104."), 34 ("The negotiation component 208 can advertise media capabilities and/or the identity associated with the endpoint 104 as determined by the information determination component 202.").

161. *See also* EX1016, Figure 2 (below) and ¶33 ("[T]he information determination component 202 can include a capability determination component 204 and/or an identity determination component 206. The capability determination component 204 can determine media capabilities associated with the endpoint 104 … [and] the identity determination component 206 can determine an identity associated with the endpoint 104….").

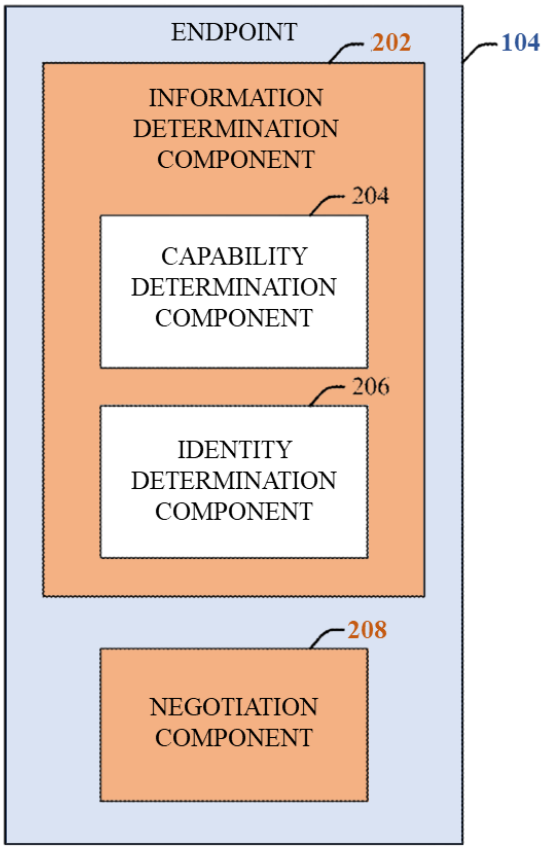

FIG. 2

3. [1b] negotiate a communication session with an interoperability server (IS) based in part on at least one of the identified information or a predefined floor control mechanism associated with the IS; and

162. Shaffer discloses that the negotiation component 208 (which again is implemented on a processor together with the information determination component 202) is configured to negotiate a communication session with an interoperability server (IS) based in part on both the identified information and a predefined floor control mechanism associated with the IS. EX1016, claim 20 ("An apparatus, comprising: an information determination component that

identifies information related to an endpoint; and a negotiation component that negotiates a communication session with an interoperability server (IS) based in part on at least one of the identified information or a pre-defined floor control mechanism associated with the IS."); *see also id.* ¶¶34 ("The negotiation component 208 can negotiate a session with an IS 102…. Further, the negotiation component 208 can present ***determined and/or identified capabilities and/or identity associated with the end point 104***."), 16, 35, 53 (emphasis added).

4. [1c] receive a first determination from the IS that the endpoint is not in adherence with capabilities of the predefined floor control mechanism and that a proxy is to be dynamically inserted to connect the endpoint to a virtual talk group, wherein the capabilities comprise quality of service, rules of transmission and trusted endpoint identity.

163. For the reasons I explained in section IV.D.1, above, claim 1c requires receiving a first determination from the IS that (a) the endpoint is not in adherence with capabilities of the predefined floor control mechanism; and (b) a proxy is to be dynamically inserted to connect the endpoint to a virtual talk group. It is my opinion that Shaffer, in view of Keller, renders obvious both parts (a) and (b) of this limitation.

a. "receive a first determination from the IS that the endpoint is not in adherence with capabilities of the predefined floor control mechanism . . . wherein the

capabilities comprise quality of service, rules of transmission and trusted endpoint identity"

164. As an initial matter, the "the predefined floor control mechanism" part of this limitation must be associated with the IS because this part derives its antecedent basis from the "a predefined floor control mechanism associated with the IS" limitation in [1b]. Shaffer discloses that the predefined floor control mechanism is associated with the IS, because the IS is enforcing the floor control policy of the system of which the IS is a part and to which a non-compliant endpoint is seeking to join. *See* EX1016, ¶¶34, 46. Moreover, the IS 102, as shown in Figure 3, below, contains a dynamic proxy component, which "can provide talk group features, such as, but not limited to, floor control." EX1016, ¶46.

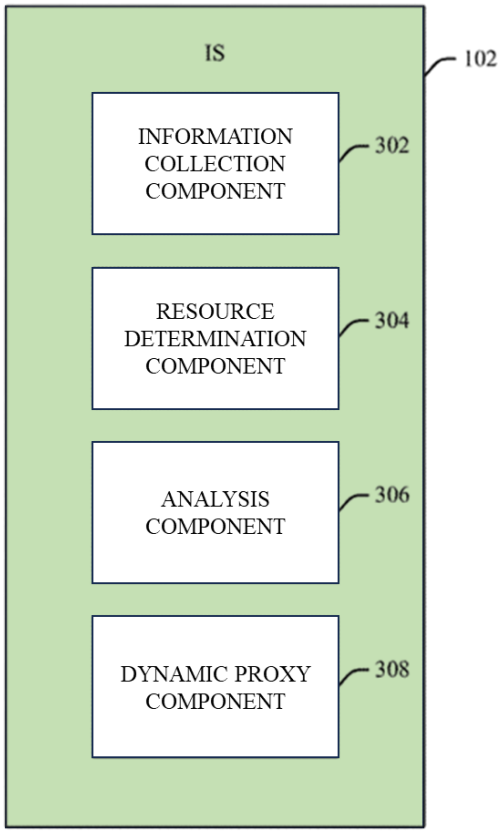

FIG. 3

165. It is my opinion that a POSITA would have found it obvious that the processor (information determination component 202 and negotiation component 208) is configured to receive a first determination from the interoperability server that the initiating endpoint is not in adherence with the following three capabilities of the predefined floor control mechanism: quality of service, rules of transmission, and trusted endpoint identity. As will be explained more below:

(1) Shaffer discloses that a proxy can be dynamically inserted when the endpoint does not adhere to the capabilities of the floor control mechanism;

(2) it is my opinion that a POSITA would have found it obvious that the interoperability server and endpoint disclosed in Shaffer used SIP to communicate for signaling (*e.g.*, call set-up, maintenance and teardown); and

(3) it would have been obvious to a POSITA to combine Shaffer's SIP-based interoperability system with Keller's disclosure of informing a SIP-enabled endpoint that it is not in compliance with the floor control mechanism via SIP-based messaging.

166. ***First***, Shaffer discloses that a proxy can be dynamically inserted when an endpoint attempts to connect to a VTG but is not in adherence with the following three capabilities of the predefined floor control mechanism:

167. **Quality of Service.** Shaffer explains that "[t]he analysis component 306 [within the IS 102] can analyze the capabilities of the endpoint (determined by the information collecting component 302) to determine if the endpoint should be connected via a proxy. If the capabilities are analyzed to be non-conforming to the IS 102, a dynamic proxy component 308 is employed to proxy the endpoint." EX1016, ¶41, Fig. 3. One of the capabilities of the endpoint analyzed by the

analysis component 306 is the quality of service that the endpoint can provide. *Id.* ¶39.

168. **Rules of transmission.** EX1016, ¶56 ("[I]f the endpoint is admitted into a VTG without proper credentials, it can be monitored for its adherence with a floor control policy, such as a specified rule of transmission. If it is identified that the monitored endpoint is non-conforming with the floor control policy, a proxy can dynamically be inserted between the endpoint and the VTG."); *see also id.* ¶¶19, 34.

169. **Trusted Endpoint Identity.** EX1016, ¶19 ("If the identity of the endpoint cannot be validated as trusted and/or secure, the system can either reject the communication request or act as a proxy for the endpoint and join the VTG on behalf of the endpoint.").

170. It is my opinion that a POSITA would have found it obvious that a proxy would also be inserted when an endpoint is not in adherence with all three capabilities of the predefined floor control mechanism.

171. ***Second***, Shaffer explains that "IS 102 can connect two-way radios to other networks, for example, by employing IP (internet protocol) technology standards" (EX1016, ¶28) and that an example of "endpoint 104 can be an IP phone" (*id.* ¶35). At the time of the '852 patent, a well-known example of an IP technology used for push-to-talk (PTT) devices was SIP (session initiation

protocol). Thus, it would have been obvious to a POSITA for the IS 102 and the endpoint 104 to employ SIP as the disclosed IP technology standard for signaling.

172. ***Third***, while Shaffer does not disclose informing the endpoint that it is not in adherence with the floor control mechanism, Keller does:

> The group entity might also detect that the terminal is unable to communicate with the floor controller 230. In this case, the group entity would preferably generate signaling to the non-dispatch endpoint to cause the endpoint to direct its media to the media manager, which would preferably be configured to impose talker arbitrated floor control on a full duplex device, e.g., the non-dispatch endpoint. The media manager will preferably generate floor requests to the floor controller when voice is sourced by the non-dispatch terminal. As an option, tones or other audio information could be sent out to the user if they attempt to speak when someone else has the floor to discourage them from speaking further.

EX1024, ¶123.

b. "receive a first determination from the IS … that a proxy is to be dynamically inserted to connect the endpoint to a virtual talk group"

173. While Shaffer does not expressly disclose an endpoint with a processor receiving a determination from the IS that a proxy is to be dynamically inserted to connect the endpoint to a virtual talk group, it would have been obvious to a POSITA that an endpoint with a processor—using SIP to communicate with

the IS—would receive a determination that a proxy is to be dynamically inserted to connect the endpoint to a virtual talk group.

174. As I explained in Section VII.D.4.a, above, it would have been obvious to a POSITA that the endpoint and IS use SIP to communicate signaling information for the call. A POSITA would also have known and/or it would have been obvious to a POSITA that the SIP message received by the endpoint after initiating a call to a VTG would include a "record-route" header, which lists each of the servers that the signal from the endpoint traverses when attempting to establish communication with the VTG, as shown below:

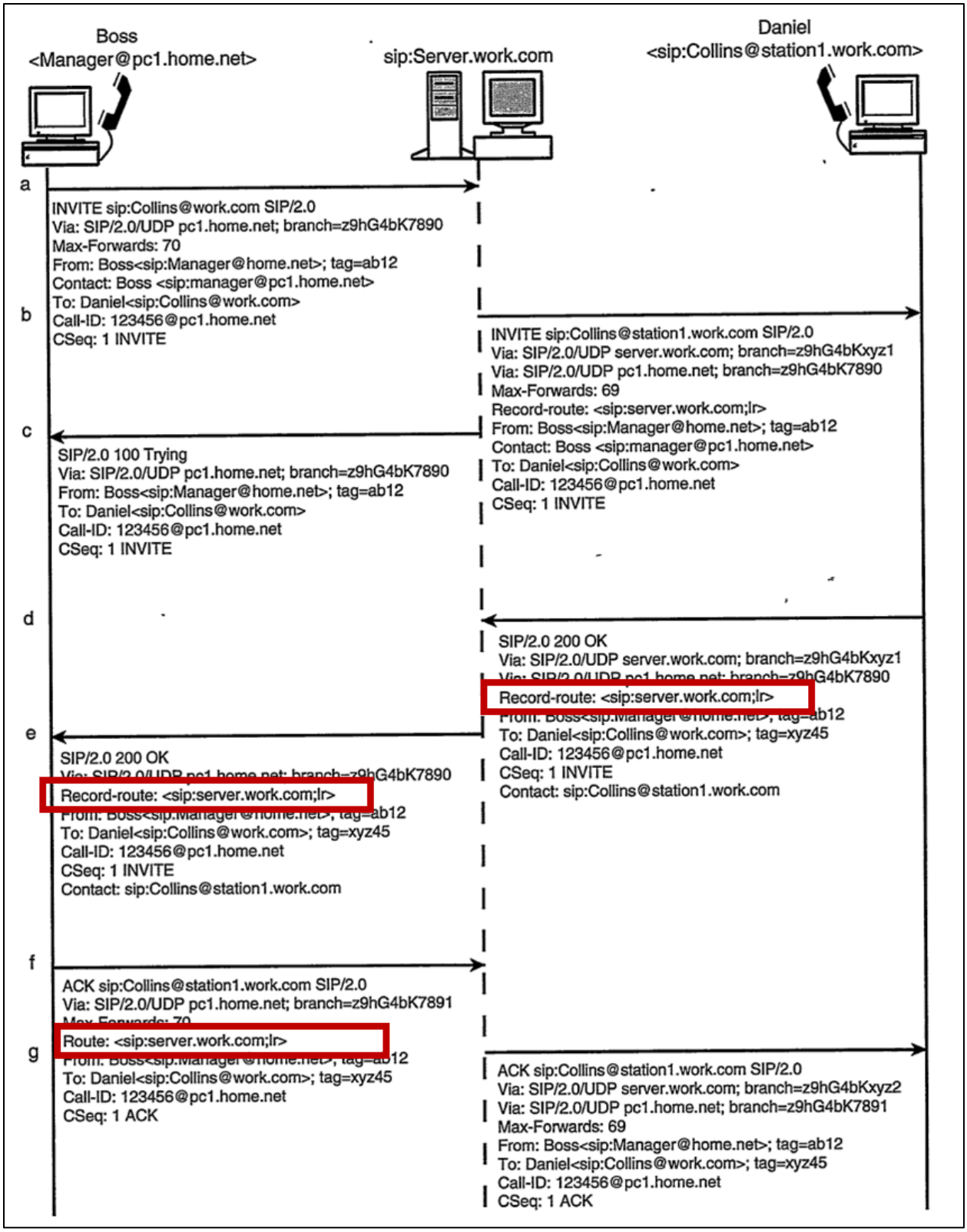
Boss
<Manager@pc1.home.net>
sip:Server.work.com
Daniel
<sip:Collins@station1.work.com>
a
INVITE sip:Collins@work.com SIP/2.0
Via: SIP/2.0/UDP pc1.home.net; branch=z9hG4bK7890
Max-Forwards: 70
From: Boss<sip:Manager@home.net>; tag=ab12
Contact: Boss <sip:manager@pc1.home.net>
To: Daniel<sip:Collins@work.com>
Call-ID: 123456@pc1.home.net
CSeq: 1 INVITE
b
INVITE sip:Collins@station1.work.com SIP/2.0
Via: SIP/2.0/UDP server.work.com; branch=z9hG4bKxyz1
Via: SIP/2.0/UDP pc1.home.net; branch=z9hG4bK7890
Max-Forwards: 69
Record-route: <sip:server.work.com;lr>
From: Boss<sip:Manager@home.net>; tag=ab12
Contact: Boss <sip:manager@pc1.home.net>
To: Daniel<sip:Collins@work.com>
Call-ID: 123456@pc1.home.net
CSeq: 1 INVITE
c
SIP/2.0 100 Trying
Via: SIP/2.0/UDP pc1.home.net; branch=z9hG4bK7890
From: Boss<sip:Manager@home.net>; tag=ab12
To: Daniel<sip:Collins@work.com>
Call-ID: 123456@pc1.home.net
CSeq: 1 INVITE
d
SIP/2.0 200 OK
Via: SIP/2.0/UDP server.work.com; branch=z9hG4bKxyz1
Record-route: <sip:server.work.com;lr>
To: Daniel<sip:Collins@work.com>; tag=xyz45
Call-ID: 123456@pc1.home.net
CSeq: 1 INVITE
Contact: sip:Collins@station1.work.com
e
SIP/2.0 200 OK
Record-route: <sip:server.work.com;lr>
To: Daniel<sip:Collins@work.com>; tag=xyz45
Call-ID: 123456@pc1.home.net
CSeq: 1 INVITE
Contact: sip:Collins@station1.work.com
f
ACK sip:Collins@station1.work.com SIP/2.0
Via: SIP/2.0/UDP pc1.home.net; branch=z9hG4bK7891
Route: <sip:server.work.com;lr>
To: Daniel<sip:Collins@work.com>; tag=xyz45
Call-ID: 123456@pc1.home.net
CSeq: 1 ACK
g
ACK sip:Collins@station1.work.com SIP/2.0
Via: SIP/2.0/UDP server.work.com; branch=z9hG4bKxyz2
Via: SIP/2.0/UDP pc1.home.net; branch=z9hG4bK7891
Max-Forwards: 69
From: Boss<sip:Manager@home.net>; tag=ab12
To: Daniel<sip:Collins@work.com>; tag=xyz45
Call-ID: 123456@pc1.home.net
CSeq: 1 ACK

EX1022 (DANIEL COLLINS, CARRIER GRADE VOICE OVER IP (2nd ed. 2003)), at 190–95.

175. Alternatively, and/or in addition to the knowledge of a POSITA, it would have been obvious to combine Shaffer with Keller, which discloses the use of the record-route header when establishing a PTT call. *E.g.*, EX1024, ¶46 (discussing the record-route header).

176. The record-route header received by the endpoint would include an identification showing that the proxy server was added to the signal path. Thus, the processor of the endpoint would be informed that a determination was made to insert the claimed proxy.

E. Claim 2. The apparatus of claim 1, wherein the processor is further configured to identify media capabilities associated with the endpoint, the media capabilities employed by the IS to dynamically determine if the endpoint should be connected to the virtual talk group via the proxy.

177. As I explained in section VII.D (claim 1), above, Shaffer discloses the apparatus of claim 1. It is my opinion that Shaffer discloses the rest of claim 2. *See* EX1016, claim 21 ("The apparatus of claim 20, further comprising a capability determination component that identifies media capabilities associated with the endpoint, the media capabilities employed by the IS to dynamically determine if the endpoint should be connected to a virtual talk group (VTG) via a proxy."); *see*

also id., Fig. 2 (showing the capability determination component 204 within the information determination component 202), ¶¶33–34.

F. Claim 3. The apparatus of claim 2, further comprising a transmitter, wherein the transmitter transmits data to the virtual talk group if it is determined that the proxy is not employed to connect the endpoint to the virtual talk group.

178. As I explained in section VII.E (claim 2), above, Shaffer discloses the apparatus of claim 2.

179. As shown in Figure 6, below, Shaffer further discloses the apparatus of claim 2 (endpoint 104) further comprising a transmitter (transmitter 608):

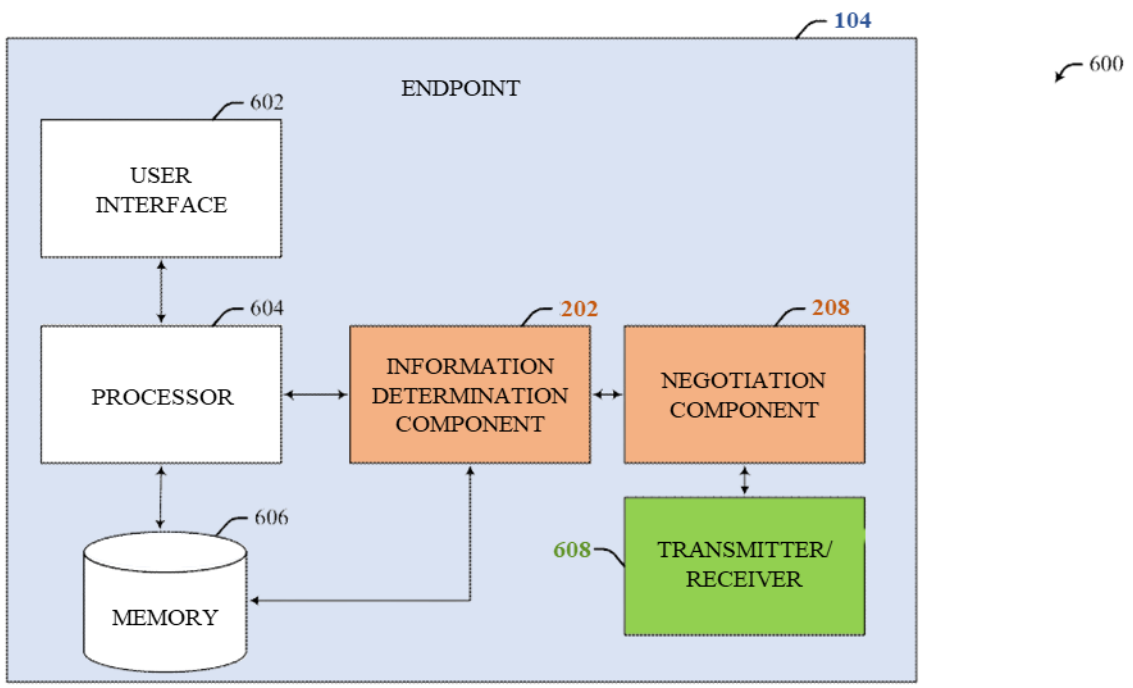

FIG. 6

EX1016, Fig. 6; *see also id.* ¶54 ("A transmitter/receiver 608 can be employed to transmit and receive data from/to the endpoint 104.").

180. Shaffer further discloses that "[i]f a proxy is not employed to attach the endpoint [104] device to the given VTG, media can be transmitted directly to a VTG at [step] 810." EX1016, ¶58, Fig. 8. A POSITA would have understood transmitter 608 to be the means by which endpoint 104 transmitted directly to the virtual talk group if a proxy was not employed—nothing else in endpoint 104, as shown in Figure 6, appears capable of transmitting to the virtual talk group.

G. Claim 4. The apparatus of claim 2, further comprising a transmitter, wherein the transmitter transmits data to the proxy over a private channel if it is determined that the proxy is employed to connect the endpoint to the virtual talk group.

181. As I explained in section VII.E (claim 2), above, Shaffer discloses the apparatus of claim 2; and as I explained in section VII.F (claim 3), above, Shaffer also discloses the apparatus of claim 2 further comprising a transmitter.

182. Shaffer further discloses "wherein the transmitter transmits data to the proxy over a private channel if it is determined that the proxy is employed to connect the endpoint to the virtual talk group." Shaffer explains that the interoperability server (IS) can also be the claimed proxy and, in instances where the interoperability server is also the claimed proxy, "[t]he IP phone [endpoint/claimed apparatus] can transfer traffic over the private channel to the IS (FIG. 1), which can stream the traffic to the VTP and vice versa." EX1016, ¶35;

see also id. ¶47 ("The audio traffic from the IP phone can be received by the dynamic proxy component 308 over a private channel and can be streamed to the intended VTG and vice versa.").

H. Claim 5. The apparatus of claim 1, wherein the processor is further configured to determine an identity associated with the endpoint, the identity employed by the IS to dynamically determine if the endpoint should be connected to the virtual talk group via the proxy.

183. As I explained in section VII.D (claim 1), above, Shaffer discloses the apparatus of claim 1.

184. Shaffer discloses that the endpoint 104 includes an identity determination component 204 (part of the claimed processor, as shown in Figure 2, below) that "can determine an identity associated with the endpoint 104, such as a talker-id, or IP address." EX1016, ¶33. The negotiation component 208 (part of the claimed processor) then discloses the identity associated with the endpoint 104 to the IS. *Id.* ¶34. Based on the information provided by the negotiation component 208, the IS 102 (FIG. 1) can determine if the endpoint 104 should be allowed to join the VTG and also determine if the endpoint should be directly connected to the VTG or should be connected via a proxy." *Id.*

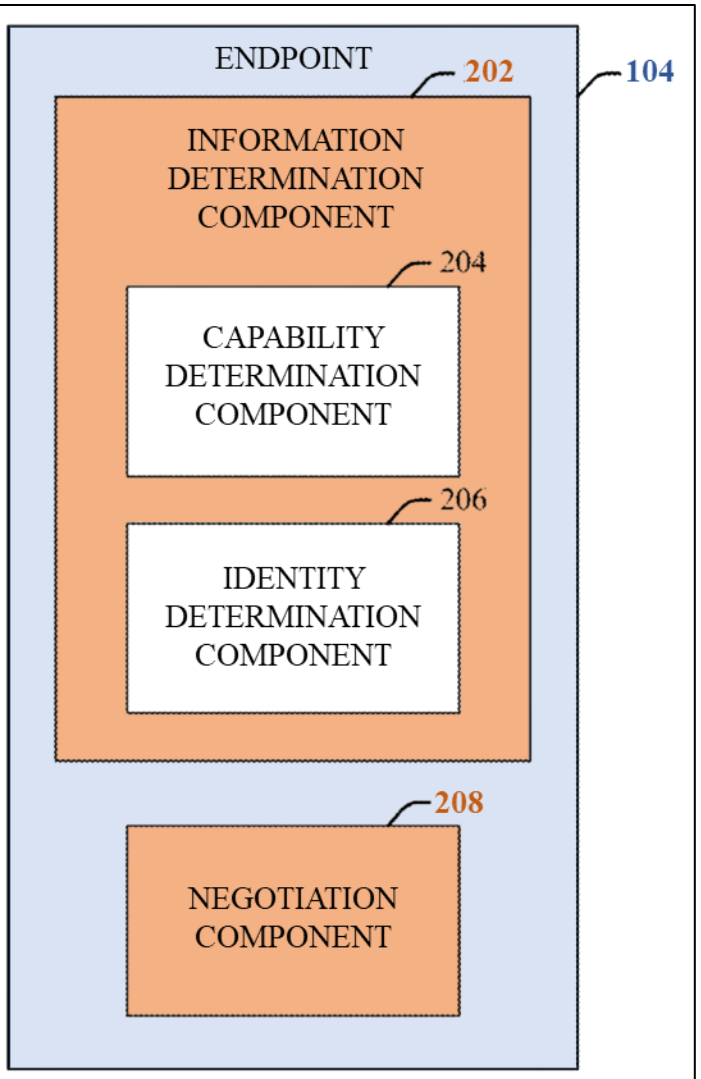

FIG. 2

I. Claim 7. The apparatus of claim 1, wherein the processor is further configured to monitor endpoints directly connected to the virtual talk group and determines that a directly connected endpoint is not conforming with a floor control policy of the virtual talk group.

185. As I explained in section VII.D (claim 1), above, Shaffer discloses the apparatus of claim 1.

186. Shaffer discloses the processor is further configured to monitor endpoints directly connected to the virtual talk group and determines that a directly connected endpoint is not conforming with a floor control policy of the virtual talk group. *See* EX1016, ¶34 ("In an example embodiment, if the endpoint 104 is admitted into a VTG without proper credentials, it can be continuously monitored by other endpoints for its adherence with system's floor control policy. If another endpoint identifies the monitored end point as non-conforming with the floor control policy of the system, the IS 102 (FIG. 1) can dynamically insert a proxy between the endpoint 104 and the VTG."). It would have been obvious to a POSITA that the "other endpoints" in Shaffer paragraph 34 could also be non-compliant endpoints (*i.e.*, all endpoints in the talk group monitor each other).

J. Claim 8

1. [8pre] A method comprising:

187. To the extent the preamble is limiting, Shaffer discloses a method. EX1016, Abstract, ¶¶24, 26.

2. [8a] initiating communication with a non-compatible communication device; identifying information associated with an initiating device; and

188. For the same reasons I explained in section VII.D.2 (claim 1a), above, Shaffer discloses this limitation.

3. [8b] negotiating a communication session with an interoperability server (IS) based in part on at least one of

the identified information or a predefined floor control mechanism associated with the IS; and

189. For the same reasons I explained in section VII.D.3 (claim 1b), above, Shaffer discloses this limitation.

4. [8c] receiving a first determination from the IS that the initiating device is not in adherence with capabilities of the predefined floor control mechanism and that a proxy is to be dynamically inserted to connect the initiating device to a virtual talk group, wherein the capabilities comprise quality of service, rules of transmission and trusted endpoint identity.

190. For the same reasons I explained in section VII.D.4 (claim 1c), above, Shaffer discloses this limitation.

K. Claim 9. The method of claim 8, wherein the information associated with the initiating device includes at least one of media capability information associated with the initiating device or an identity of the initiating device.

191. As I explained in section VII.J (claim 8), above, Shaffer discloses claim 8.

192. For the same reasons I explained in section VII.E (claim 2), above, Shaffer discloses "wherein the information associated with the initiating device includes at least one of media capability information associated with the initiating device or an identity of the initiating device."

L. Claim 10. The method of claim 8, further comprising transmitting media to the proxy over a private network through custom messages if it is evaluated that the proxy is employed.

193. As I explained in section VII.J (claim 8), above, Shaffer discloses claim 8.

194. For the same reasons I explained in section VII.G (claim 4), above, Shaffer discloses "transmitting media to the proxy over a private network through custom messages if it is evaluated that the proxy is employed." *See also* EX1016, ¶58 ("If it is determined that the proxy is employed to attach the endpoint device to the given VTG, media can be transmitted to the proxy over a private network through custom messages at 812.").

M. Claim 11. The method of claim 8, further comprising, attaching the initiating device directly to the virtual talk group and transmitting media directly to the virtual talk group if the proxy is not employed to attach the initiating device to the virtual talk group.

195. As I explained in section VII.J (claim 8), above, Shaffer discloses claim 8.

196. For the same reasons I explained in section VII.F (claim 3), above, Shaffer discloses "attaching the initiating device directly to the virtual talk group and transmitting media directly to the virtual talk group if the proxy is not employed to attach the initiating device to the virtual talk group."

N. Claim 12

1. [12pre] An endpoint comprising:

197. To the extent the preamble is limiting, Shaffer discloses an endpoint, for the same reasons I explained in section VII.D.1 (claim 1pre), above.

2. [12a] a transmitter and a receiver;

198. Shaffer discloses an endpoint with a transmitter and receiver (transmitter/receiver 608):

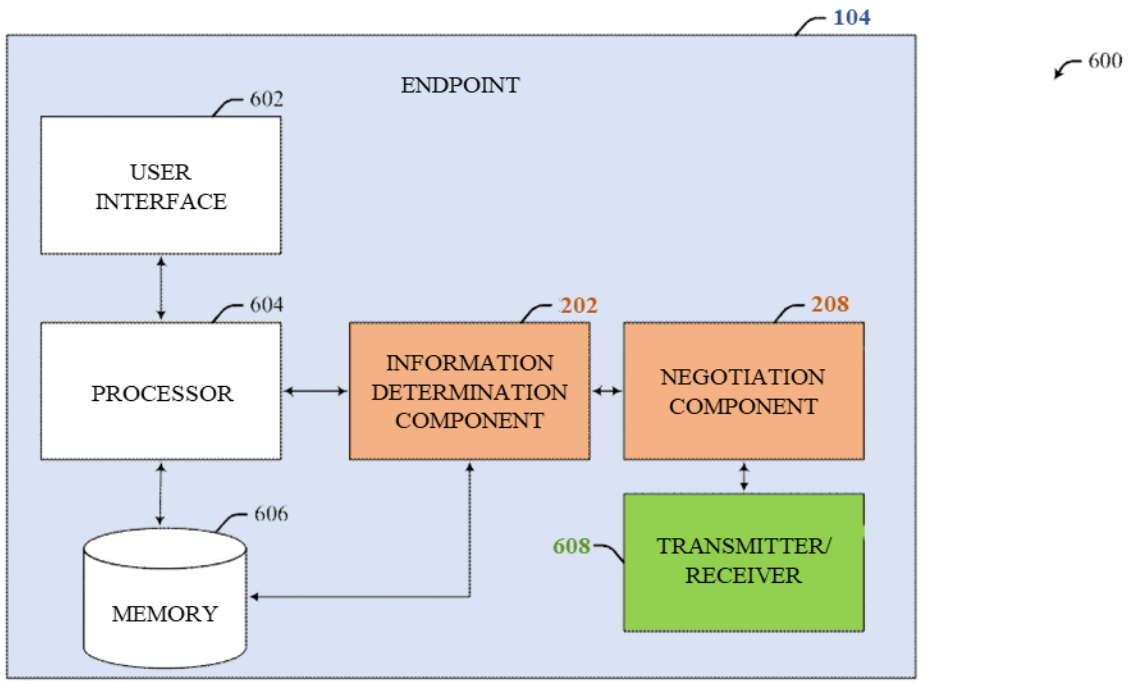

FIG. 6

EX1016, Fig. 6; *see also id.* ¶54.

3. [12b] a user interface;

199. Shaffer discloses an endpoint with a user interface (user interface 602):

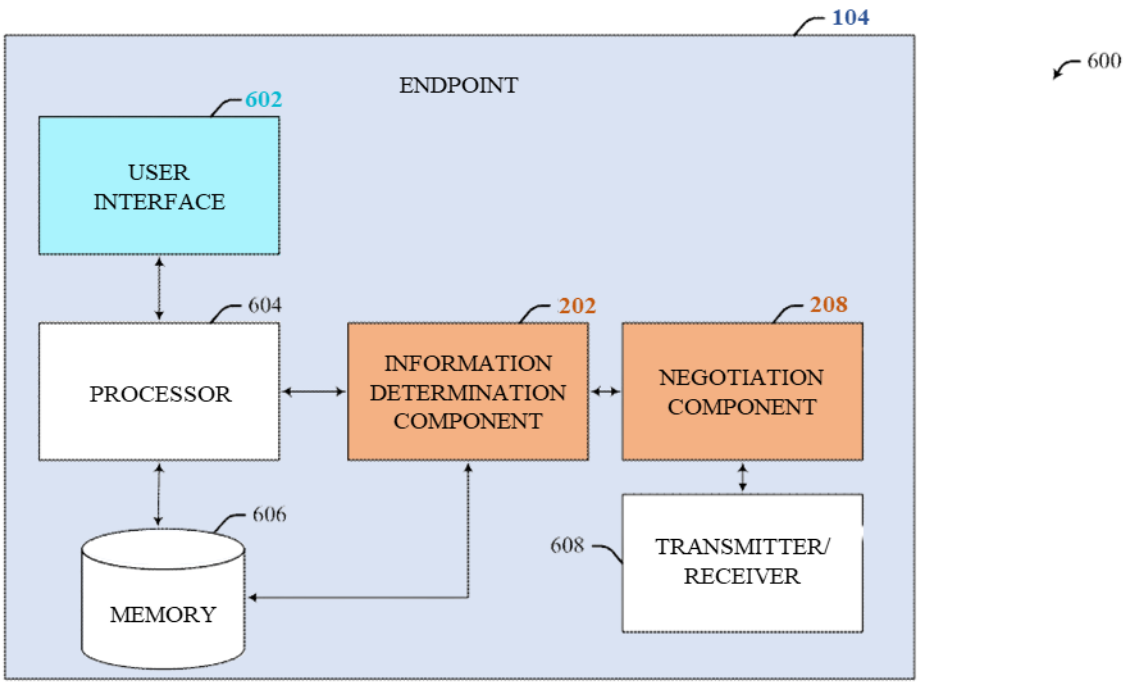

FIG. 6

EX1016, Fig. 6; *see also id.* ¶53 ("The endpoint 104 can generally include a user interface 602 that can be employed by an entity, such as a user to initiate or receive communication.").

4. [12c] a processor coupled to the user interface, wherein the processor: identifies information related to the endpoint; and

200. Shaffer discloses a processor (information determination component 202 and negotiation component 208) coupled to the user interface (user interface 604):

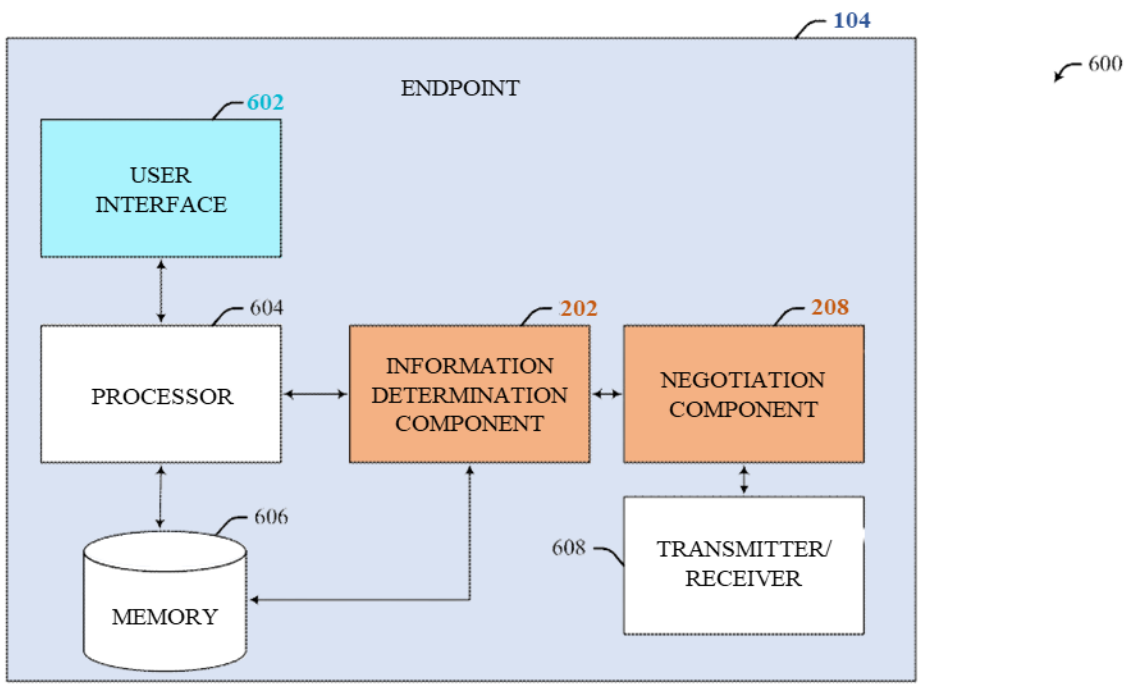

FIG. 6

EX1016, Fig. 6; *see also id.* ¶53.

201. For the same reasons I explained in section VII.D.2 (claim 1a), above, Shaffer further discloses that the processor identifies information related to the endpoint.

5. [12d] negotiates a communication session with an interoperability server based in part on at least one of the identified information or a predefined floor control mechanism associated with the interoperability server; and

202. For the same reasons I explained in section VII.D.3 (claim 1b), above, Shaffer discloses this limitation.

6. [12e] receive a first determination from the interoperability server that the endpoint is not in adherence with capabilities of the predefined floor control mechanism and that a proxy is to be dynamically inserted to connect the endpoint to a virtual talk group, wherein the capabilities comprise quality of service, rules of transmission and trusted endpoint identity

203. For the same reasons I explained in section §VII.D.4 (claim 1c), above, Shaffer discloses this limitation.

O. Claim 13. The endpoint of claim 12, wherein the processor identifies media capabilities associated with the endpoint, the media capabilities employed by the interoperability server to dynamically determine if the endpoint should be connected to the virtual talk group via the proxy.

204. As I explained in section VII.N (claim 12), above, Shaffer discloses claim 12.

205. For the same reasons I explained in section VII.E (claim 2), above, Shaffer discloses "wherein the processor identifies media capabilities associated with the endpoint, the media capabilities employed by the interoperability server to dynamically determine if the endpoint should be connected to the virtual talk group via the proxy."

P. Claim 14. The endpoint of claim 12, wherein the processor determines an identity associated with the endpoint, the identity employed by the interoperability server to dynamically determine if the endpoint should be connected to a virtual talk group via the proxy.

206. As I explained in section VII.N (claim 12), above, Shaffer discloses claim 12.

207. For the same reasons I explained in section VII.H (claim 5), above, Shaffer discloses "wherein the processor determines an identity associated with the endpoint, the identity employed by the interoperability server to dynamically determine if the endpoint should be connected to a virtual talk group via the proxy."

Q. Claim 15. The endpoint of claim 12, wherein the processor causes the transmitter to transmit data to the virtual talk group if it is determined that the proxy is not employed to connect the endpoint to the virtual talk group.

208. As I explained in section VII.N (claim 12), above, Shaffer discloses claim 12.

209. For the same reasons I explained in section VII.F (claim 3), above, Shaffer discloses "wherein the processor causes the transmitter to transmit data to the virtual talk group if it is determined that the proxy is not employed to connect the endpoint to the virtual talk group."

R. Claim 16. The endpoint of claim 12, wherein the processor causes the transmitter to transmit data to the proxy over a private

channel if it is determined that the proxy is employed to connect the endpoint to the virtual talk group.

210. As I explained in section VII.N (claim 12), above, Shaffer discloses claim 12.

211. For the same reasons I explained in section VII.G (claim 4), above, Shaffer discloses "wherein the processor causes the transmitter to transmit data to the proxy over a private channel if it is determined that the proxy is employed to connect the endpoint to the virtual talk group."

VIII. GROUND 3: CHOWDHURY IN VIEW OF POC INTERWORKING SERVICE, POC SYSTEM DESCRIPTION, TR 23.979, JIN AND THE KNOWLEDGE OF A POSITA RENDERS OBVIOUS CLAIMS 1 TO 2 AND 9 TO 13

A. Motivation to Combine Chowdhury with PoC Interworking Service, PoC System Description, and PoC Architecture

212. In my opinion, it would have been obvious to combine Chowdhury with PoC Interworking Service, PoC System Description, and PoC Architecture.[5] A POSITA would be motivated to combine the OMA-PoC Documents because they all relate to the OMA PoC standard/specification. The OMA-PoC Documents

[5] While the PoC Architecture document is not referenced in my analysis for Ground 1, it is referenced in my analysis for Ground 2. Thus, for simplicity, I discuss PoC Architecture here in Ground 1, since my reasoning for combining it with Chowdhury is the same for all of the PoC documents.

also cross reference each other. Chowdhury is based on the "interconnecting Push to Talk over Cellular (POC) standard from the Open Mobile Alliance (OMA), *i.e.*, OMA-POC." EX1036, 3:19–20. Thus, to understand the disclosure of Chowdry, a POSITA would look to the OMA-PoC Documents, including the PoC Architecture (EX1029), PoC Requirements (EX1030), PoC System Description (EX1031), and PoC Interworking Service (EX1032), among others (collectively, the "OMA-PoC Documents"). A POSITA would have looked at the components disclosed in Chowdry and then looked to the explanation for that component within the OMA-PoC Documents.

213. The invention disclosed in Chowdhury is directed to a system for communication between an OMA-PoC based network and a PTT (e.g., P25) network, as shown in Figure 1, below:

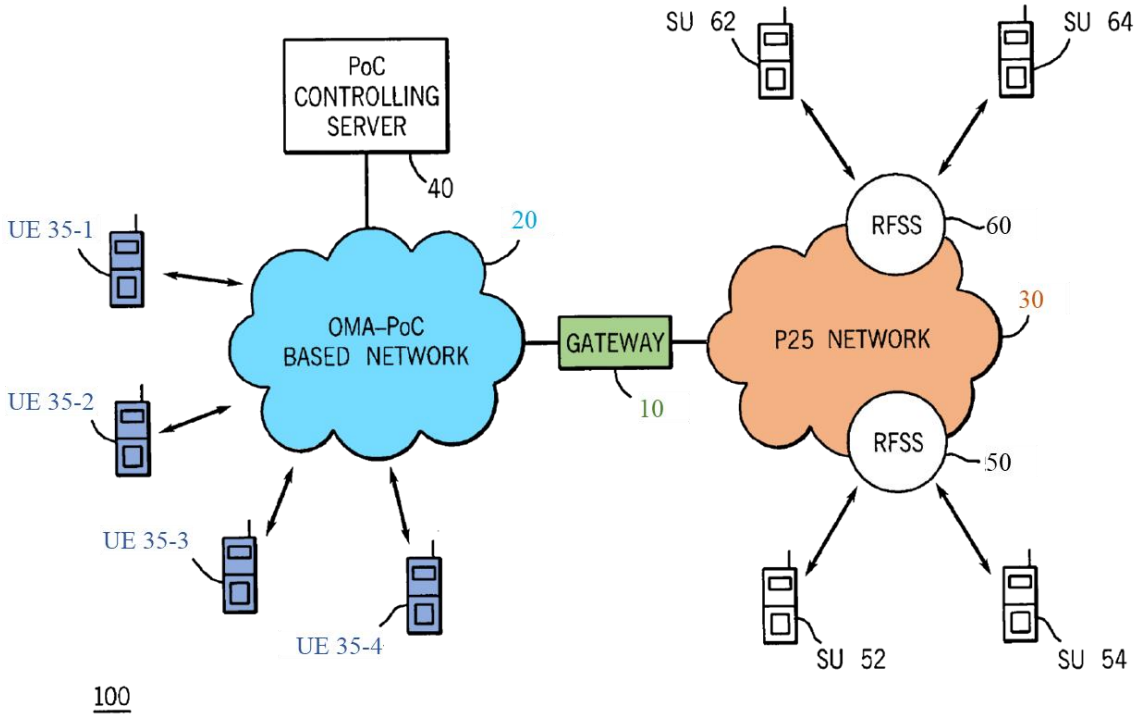

FIG. 1

214. Thus, a POSITA would look to PoC Interworking Service (EX1032), which explains handling communications between PoC and PTT (P25) Networks. *See* EX1031 (PoC System Description), 18 (defining "PoC Interworking Service" as "[a] means to extend the PoC User experience beyond the OMA defined PoC Service and PoC Network boundaries, accomplished by interworking with other networks and systems, while not PoC compliant, being able to provide a reasonably comparable capability, involving simplex media based conferencing."); EX1029 (PoC Architecture), 11 (same); *see also* EX1030 (PoC Requirements), 73 (describing PoC Interworking Service).

B. Motivation to Combine Chowdhury, PoC Interworking Service, PoC System Description, and PoC Architecture with TR 23.979

215. It is my opinion that a POSITA would have found it obvious to combine Chowdhury (EX1035) with PoC Interworking Service (EX1032), PoC System Description (EX1031), PoC Architecture (EX1029) and TR 23.979 (EX1033). As explained above, it would have been obvious to combine Chowdhury with PoC Interworking Service, PoC System Description, and PoC Architecture. It would have been obvious to further combine TR 23.979 because the "system description of the SIP/IP Core and the underlying access network for PoC is out of scope of" the OMA PoC documentation; the OMA PoC documentation instead directs a reader to TR 23.979. EX1031 (PoC System Description), 10. Thus, a POSITA would have been motivated to combine TR 23.979 with Chowdhury and PoC Interworking, since TR 23.979 provides necessary details for understanding the implementation of Chowdhury and PoC Interworking.

C. Motivation to Combine Chowdhury, PoC Interworking Service, PoC System Description, PoC Architecture, and TR 23.979 With Jin

216. In my opinion, it would have been obvious to a POSITA to further combine Chowdhury (EX1035) with PoC Interworking Service (EX1032), PoC System Description (EX1031), PoC Architecture (EX1029) TR 23.979 (EX1033) with Jin (EX1036). Neither Chowdhury, PoC Interworking Service, nor TR

23.979 provide any specific details or explanation on any practical/physical endpoints/devices that could or would be used with the PoC/PTT architecture disclosed by Chowdhury, PoC Interworking Service, and TR 23.979. Thus, a POSITA interested in a practical implementation of Chowdhury, PoC Interworking Service, PoC System Description, PoC Architecture, and TR 23.979 would have looked for a document like Jin, which discloses an actual physical device for use with a PTT/PoC system. *See* EX1036, Figs. 1 and 2 and their accompanying description.

D. Claims 1, 8 and 12

Significant portions of claims 1, 8 and 12 recite similar limitations, but the initial limitations of those claim vary somewhat. I will analyze the initial limitations separate, followed by a combined analysis for the similar limitations appearing later in the claims.

1. [1pre] An apparatus comprising a processor, wherein the processor is configured to:

[12pre] An endpoint comprising:

[12a] a transmitter and a receiver;

[12b] a user interface;

[12c] a processor coupled to the user interface, wherein the processor:

217. To the extent the preambles are limiting, the combination of PoC Interworking Service, Chowdhury and Jin renders them, as well as limitations [12a], [12b] and [12c], obvious. PoC Interworking Service discloses a network configuration in which a "PoC Client A" in an OMA PoC Network A with a "Controlling PoC Function A" communicates with P2T client B. 1024, 7. The presence of the Controlling PoC Function A in Network A indicates that PoC Client A initiates a communication to P2T Client B.

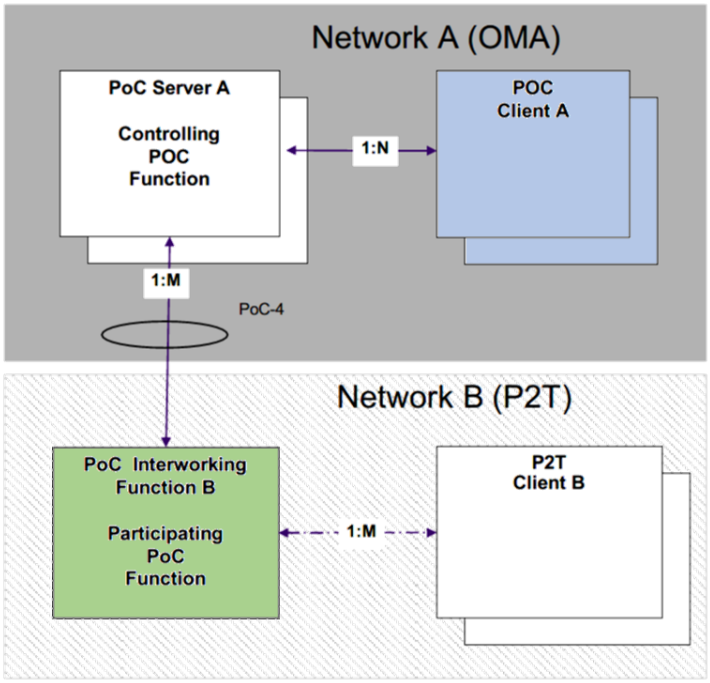

218. PoC Interworking Service does not provide details about PoC Client A, but Chowdhury discloses a similar network configuration in which a commercial OMA-PoC Network 20 includes a plurality of user equipment ("UE")

devices 35 (*i.e.*, 35-1 to 35-4). EX1034, 3:27–48 and Fig. 1. A POSITA would have understood or found obvious to employ one of Chowdhury's UE 35 devices as PoC Client A in PoC Interworking Services.

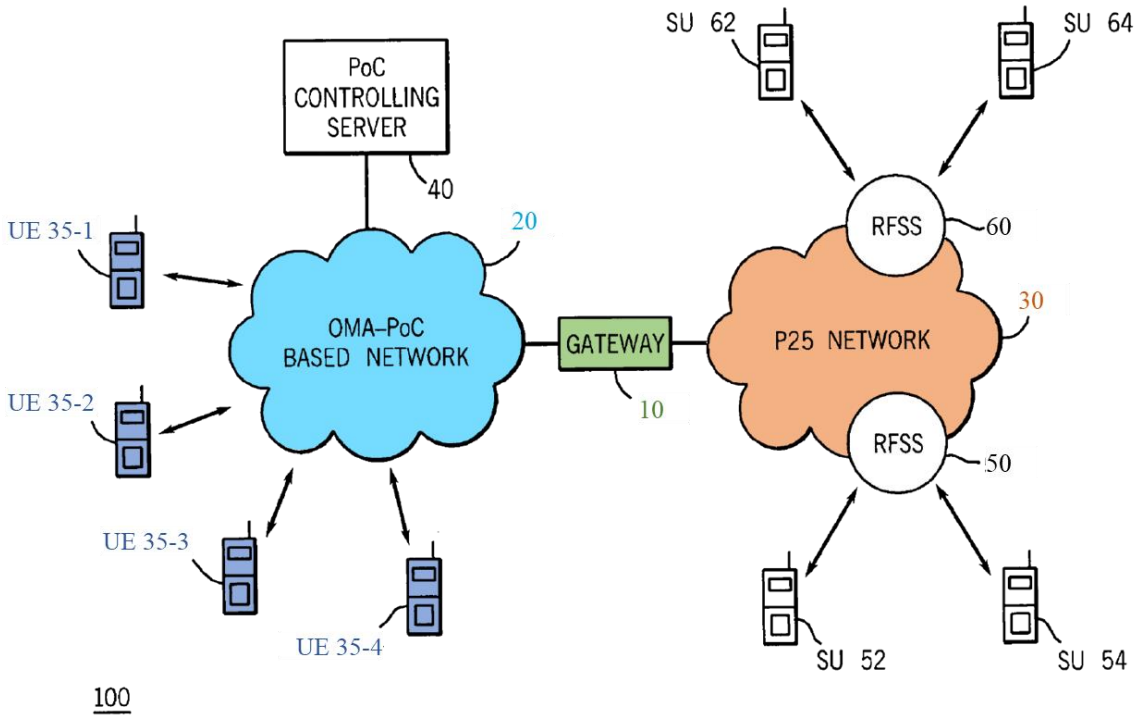

FIG. 1

219. Chowdhury does not disclose details about the UE 35 devices, but a POSITA would have understood or at least would have found obvious that those devices constituted smartphones configured for communication on a PoC network.

220. Jin discloses a mobile station 202, which is a cellular telephone in an embodiment, suitable for use in a PoC network as shown below in Figure 2. EX1036, ¶¶[0020], [0024], [0031]. The mobile station 202 includes a microprocessor 238 that is controls overall operation of the mobile station 202, as

well as a receiver 212 and transmitter 214. EX1036, ¶¶[0034], [0032]. The mobile station 202 further includes a user interface including a display 222, keyboard 232, an auxiliary user interface 228, and PTT switch 450. EX1036, ¶¶[0034], [0037], [0020], [0049]. A POSITA would have found it obvious to use a mobile station (202) having a processor (238), transmitter (214), receiver (212), and user interface (222) as taught by Jin as the UE-35 in Chowdhury and the PoC Client A in PoC Interworking Services.

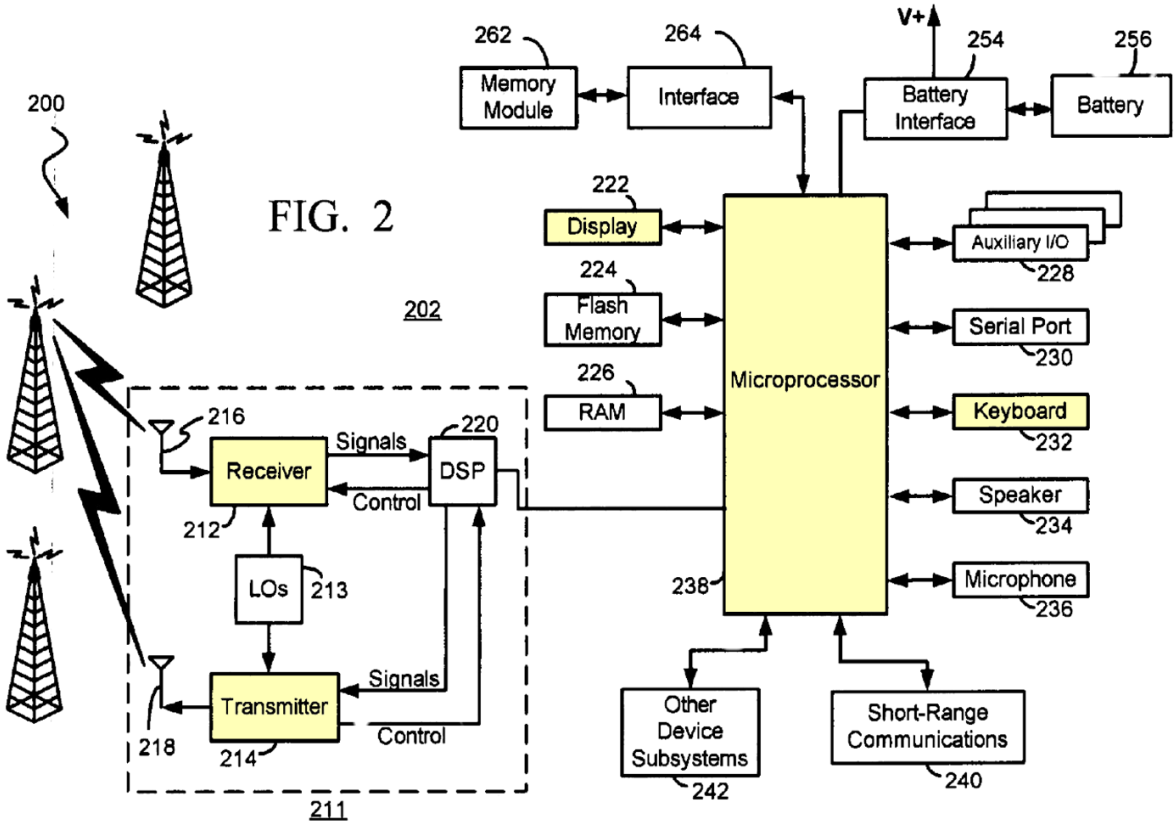

2. [8pre] A method comprising

221. To the extent the preamble is limiting, the combination of PoC Interworking Service, Chowdhury and Nextel renders it obvious. For example, PoC Interworking Service describes methods for facilitating communications between PoC Client A in an OMA PoC Network A with P2T client B. EX1032, 7. Chowdhury discloses a "method of coordinating real-time protocol setup when interconnecting public safety wireless networks and commercial wireless networks to support push-to-talk group calls." EX1035, 1:9–13.

3. [8a] initiating communication with a non-compatible communication device

222. As discussed above, PoC Client A initiates a communication to P2T client B. P2T client B is non-compatible with PoC Client A because they use different communications standards and protocols. For example, because PoC client A is configured for cellular communications (PoC) whereas P2T Client B is configured for ISSI (Intra-RF Sub-System Interface) communications. EX1034, 3:26–42.

4. [1a] identify information related to an endpoint to obtain identified information; and

[8b] identifying information associated with an initiating device;

[12d] identifies information relating to an endpoint

223. The combination of PoC Interworking Service, Chowdhury and Nextel renders these limitations obvious. TR23.979 discloses identifying information relating to an initiating endpoint to obtain identified information for that initiating endpoint. In particular, TR23.979 discloses that the initiating endpoint PoC Client A obtains an IP address for itself during the process of establishing a PDP (packet data protocol) context. EX1033, 12 (Fig. 5.3.1, annotated excerpt shown below) and 13 (referring to inclusion of an IP address obtained in step 3 ("Establish PDP context") in a SIP invite header in step 6).

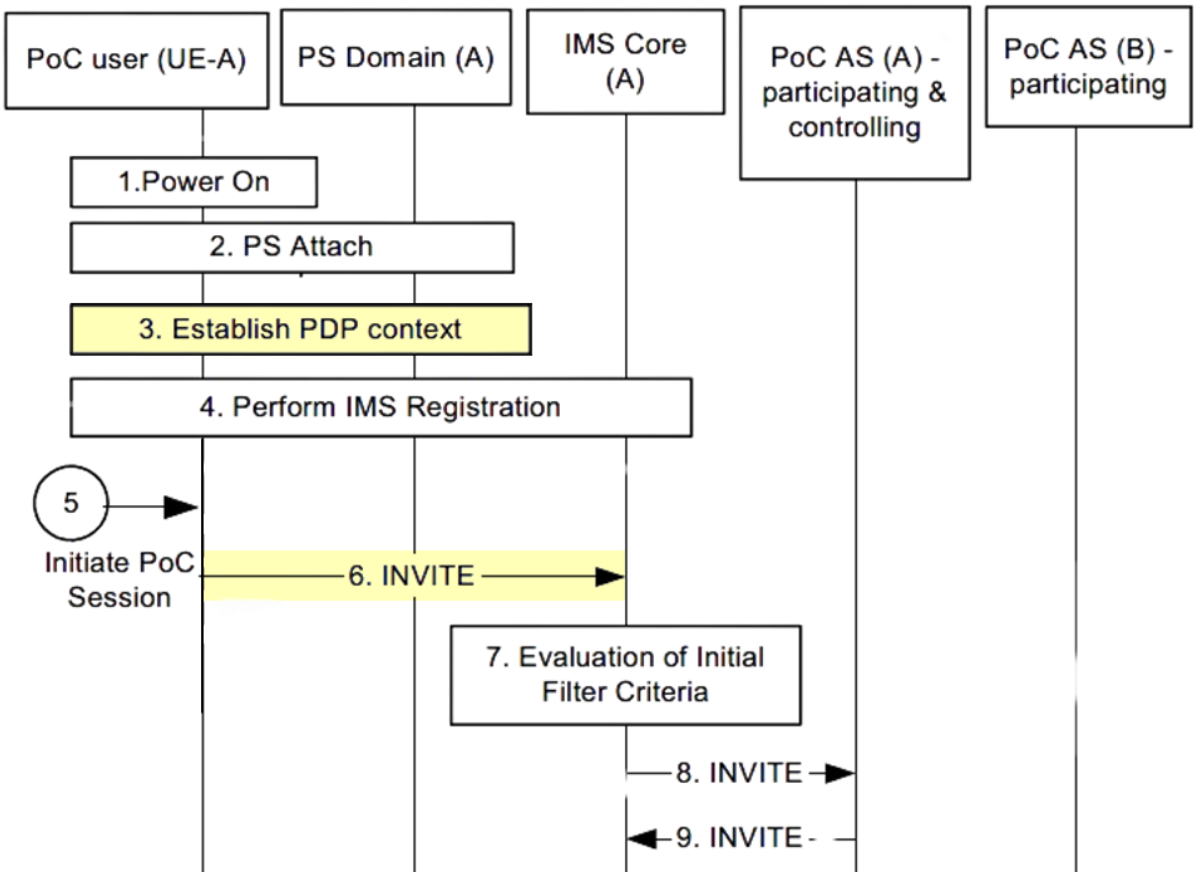

The process performed by PoC Client A discussed in TR23.979 is also performed when establishing a communication to P2T Client B as discussed in PoC Interworking Service. EX1032, 10 (discussing replacement of PoC server performing participating PoC function with PoC Interworking Function server performing the participating PoC function in usage scenario 1).

5. [1b] negotiate a communication session with an interoperability server (IS) based in part on at least one of the identified information or a predefined floor control mechanism associated with the IS; and

[8c] negotiating a communication session with an interoperability server (IS) based in part on at least one of the identified information or a predefined floor control mechanism associated with the IS; and

[12e] negotiates a communication session with an interoperability server based in part on at least one of the identified information or a predefined floor control mechanism associated with the interoperability server; and

224. The combination of TR23.979, PoC Interworking Service, and Chowdhury renders these limitations obvious. TR23.979 discloses that PoC Client A negotiates a communication session for communication with P2T Client by sending a SIP Invite message including the IP address for PoC Client A. EX1033, 13.

6. UE-A creates a SIP session for the PoC communication by sending the INVITE request into the IMS Core (A), in this example with UE-B as a destination address (alternatively the destination address could also be a PSI hosted by a PoC server

> for a PoC group session). The INVITE request contains the PoC service indication and the SDP media parameters indicate the IP address obtained in step 3 and that UE-A is ready to send and receive media, as in this example the UE-A established a non real time PDP context for talk burst control and media at IMS registration time.

EX1033, 13.

225. The SIP Invite message from PoC Client A reaches an interoperability server ("IS"), namely a server with a PoC Interworking Function that performs a participating PoC function for the connection to P2T Client B. As discussed above, PoC Interworking Service discloses a scenario in which a P2T client may be connected to a PoC Network A via a PoC Interworking Function resident on a server in a P2T Network B:

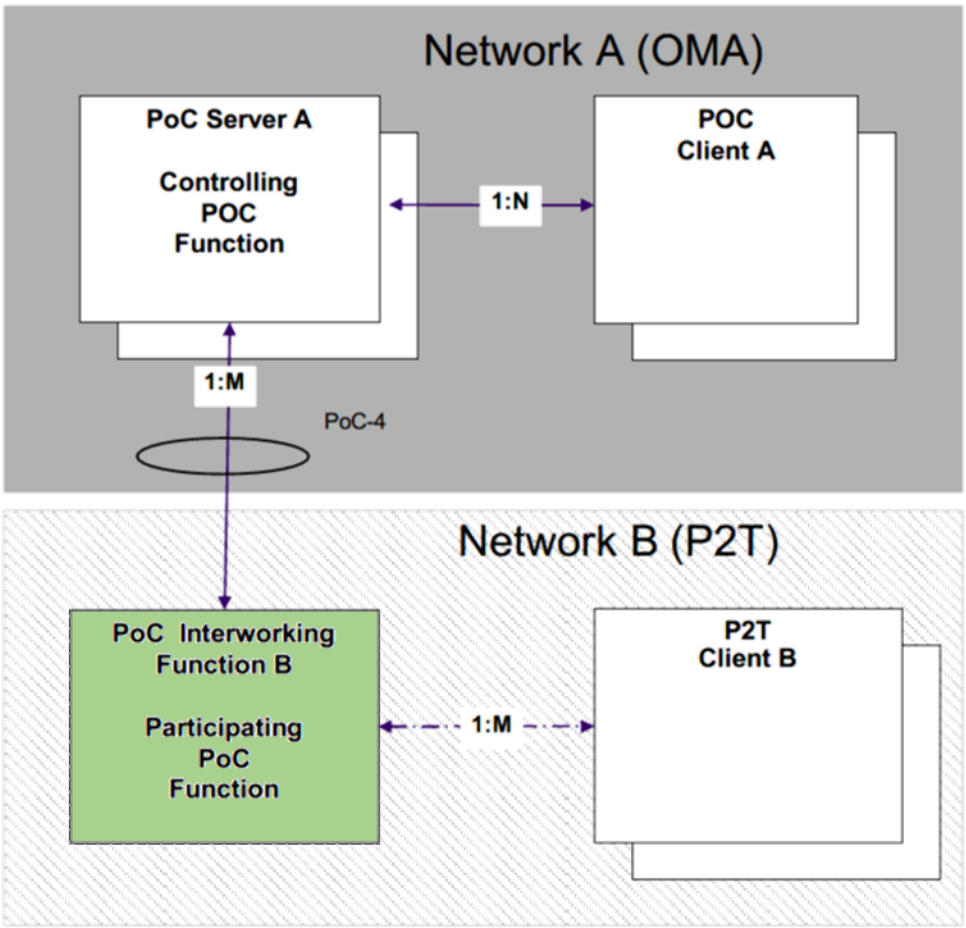

EX1032, 17.

226. The Interworking Function shown in Figure 1 is an "interoperability server" as that term is used in the '852 patent because it facilitates communications between PoC Client A and P2T Client B by "provid[ing] conversion between PoC Network based SIP signalling, Talk Burst Control and Media Burst Control Protocol, and Media packet transport, and External P2T Network based session signaling, ***floor control***, and media transport protocol." EX1032, 6 (emphasis added). This passage of PoC Interworking Service indicates that floor control will be controlled by Network B in which the Interworking Function/IS resides. *Id.*

227. PoC Interworking Service does not disclose details of the implementation of the PoC Interworking Function B. Thus, a POSITA would have found it obvious to look to the Chowdhury reference which discloses additional detail concerning the implementation of a PoC interworking function. Chowdhury discloses a gateway 10 that connects an OMA-PoC based network 20 with a P2T network, in particular a P25 Network that is a type of P2T network used by public safety officials such as police departments. EX1034, 3:11–42.

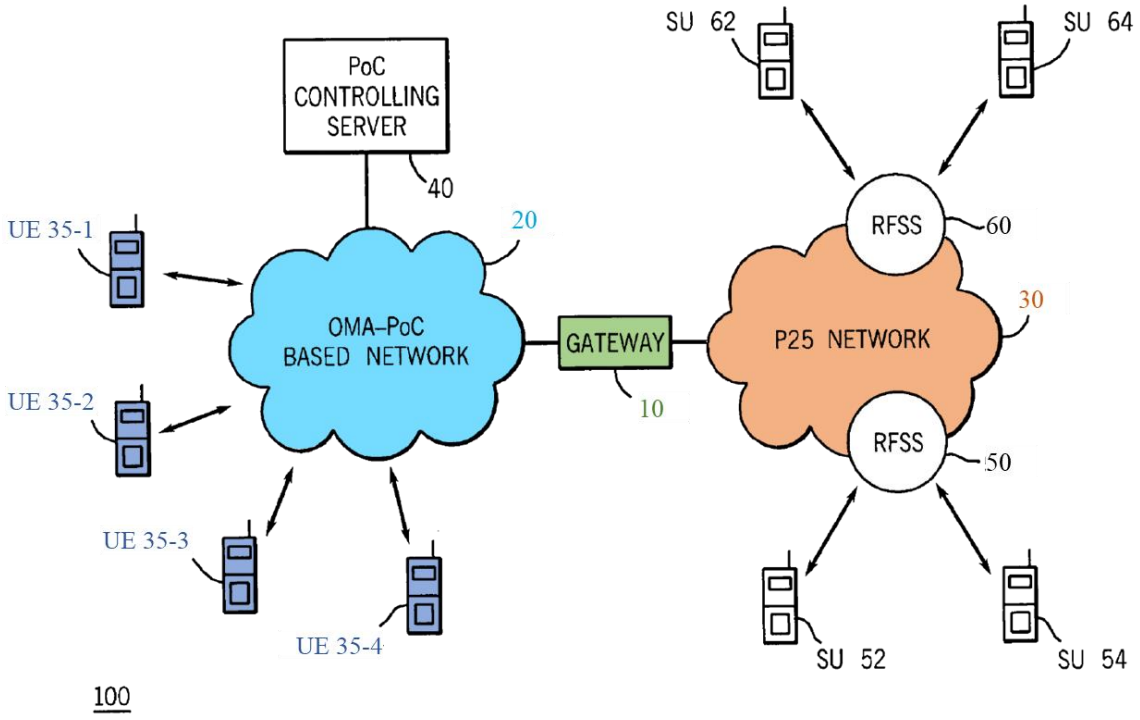

FIG. 1

228. Chowdhury's gateway 10 is shown in greater detail in Figure 2, below. The gateway 10 includes an interoperability module 240 that constitutes the claimed IS and that performs the functions of the Interworking Function

described in PoC Interworking Service, as discussed above. A POSITA would have understood and found it obvious to utilize the gateway 10 to perform the PoC Interworking Function B described above in Figure 1 of PoC Interworking Service.

229. As disclosed in Chowdhury, the interoperability module 240 includes a PTT Interop Module 244 that "manages the operation, e.g., floor control arbitration, call preemption etc. of the talk group . . ." EX1034, 6:18–31. Thus, when gateway 10 is implemented as the PoC Interworking Function B and the Interoperability Module 240 serves as the IS, the predefined floor control mechanism is associated with the IS as required by these claim limitations.

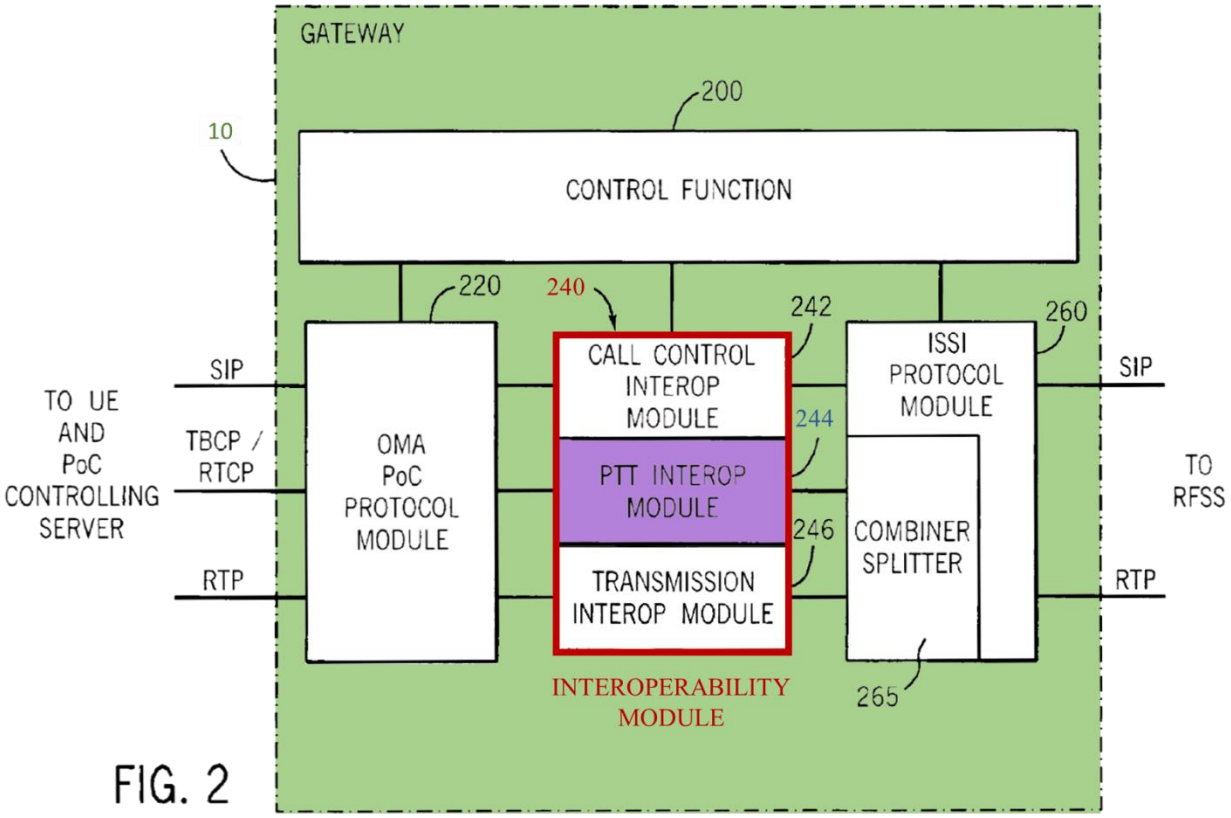

FIG. 2

6. [1c] receive a first determination from the IS that the endpoint is not in adherence with capabilities of the predefined floor control mechanism and that a proxy is to be dynamically inserted to connect the endpoint to a virtual talk group, wherein the capabilities comprise quality of service, rules of transmission and trusted endpoint identity.

[8d] receiving a first determination from the IS that the endpoint is not in adherence with capabilities of the predefined floor control mechanism and that a proxy is to be dynamically inserted to connect the endpoint to a virtual talk group, wherein the capabilities comprise quality of service, rules of transmission and trusted endpoint identity.

[12f] receive a first determination from the IS that the endpoint is not in adherence with capabilities of the predefined floor control mechanism and that a proxy is to be dynamically inserted to connect the endpoint to a virtual talk group, wherein the capabilities comprise quality of service, rules of transmission and trusted endpoint identity"

230. The combination of PoC Interworking Service, Chowdhury and TR23.979 renders these limitations obvious as explained below.

a. "a first determination from the IS that the endpoint is not in adherence with capabilities of the predefined floor control mechanism . . . wherein the capabilities comprise quality of service, rules of transmission and trusted endpoint identity"

231. The combination of Chowdhury and PoC Interworking Service renders obvious these portions of limitations [1c], [8d] and [12f]. Chowdhury discloses that the IS/interoperability module 240 includes a Call Control Interop Module 242 that "provides interworking for SIP messages." EX1034, 6:14–17. Chowdhury also discloses that the IS/interoperability module 240 includes a

transmission Interop Module 246 that provides (a) translation of identifiers for the UEs in the PoC Network and identifiers of the radios in the P2T network, (b) provides codec translation if different codecs are used in the PoC and P2T networks, and (c) resequencing of RTP sequence numbers and re-mapping of RTP time-stamps, if necessary. EX1034, 6:33–39 In order to perform these functions, the Call Control Interop Module 242 determines that PoC Client A is not in adherence with the rules of transmission of the P2T network (*e.g.*, if a codec translation is performed by the Call Control Interop Module 242, it must determine that the translation is necessary because the codecs are incompatible).

b. "a first determination from the IS … that a proxy is to be dynamically inserted to connect the endpoint to a virtual talk group"

232. Chowdhury discloses these portions of limitations [1c], [8d] and [12f]. Chowdhury discloses embodiments in which the gateway 10 is connected to the P2T/P25 network 30 solely via connection to the home RFSS server 350 as shown in Figure 3, below. Chowdhury further discloses that the connection between the gateway 10 and the home RFSS server 350 is non-persistent in what Chowdhury describes as configurations 2 and 4. EX1034, 7:37–47. In such configurations, the ISSI protocol module 260 is dynamically inserted to connect the PoC Client A to the Home RFSS sever 350 to complete the connection to a virtual talk group including an SU 355 radio constituting P2T client B in the P2T/P25 network by

sending an ISSI-setup-request from the Call Control Interop Module 242 in the IS to the ISSI protocol module 260. EX1034, 11:4–7 and Fig. 6, step 620. Chowdhury further discloses that the elements of Figure 2 are implemented in separate physical devices in some embodiments. EX1034, 9:37–41. The ISSI protocol module 260 is a dynamically inserted proxy, as that term is used in the '842 patent.

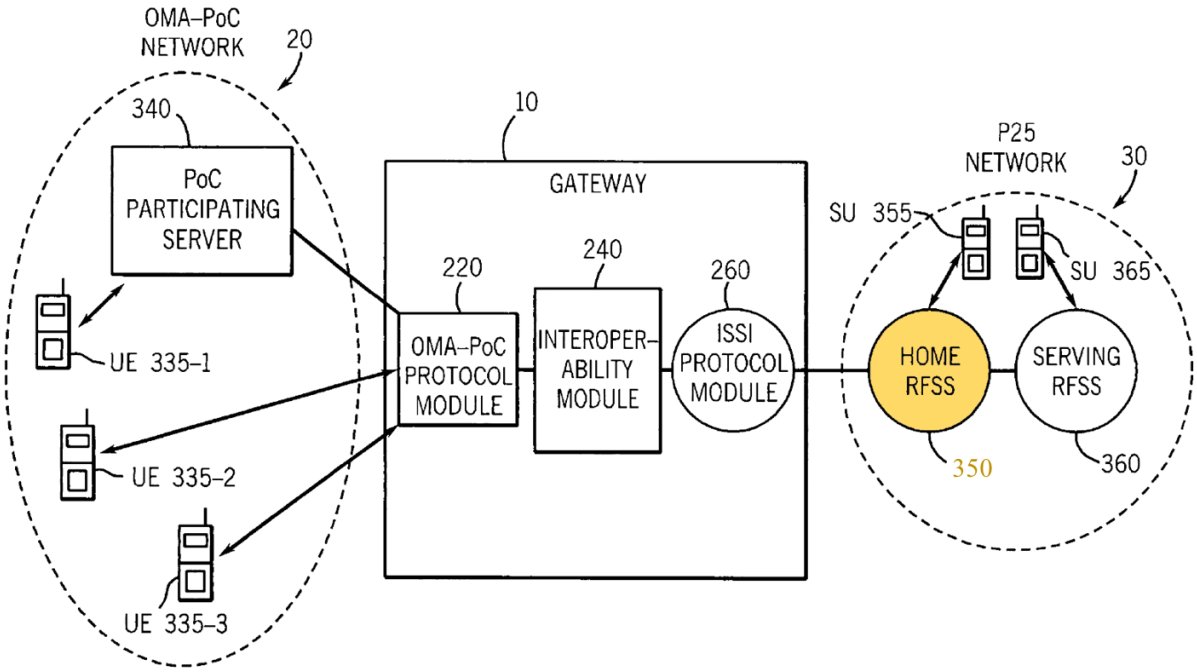

FIG. 3

c. "receive a first determination from the IS . . ."

233. The combination of TR23.979 and PoC Interworking Service render these portions of limitations [1c], [8d] and [12f] obvious. As discussed above, PoC Interworking Service discloses that, in call flows illustrated in TR23.979, the PoC server that performs the participating PoC function can be replaced with a server

that performs the PoC Interworking Function performing the controlling PoC function in scenario 1 illustrated in Figure 1 of that document. EX1032, 10. I include below an annotated version of one such call flow from TR23.979, with annotations showing the substitution of the PoC Interworking Function B for the server performing the PoC participating function, and a P2P user B for the PoC user (UE-B).

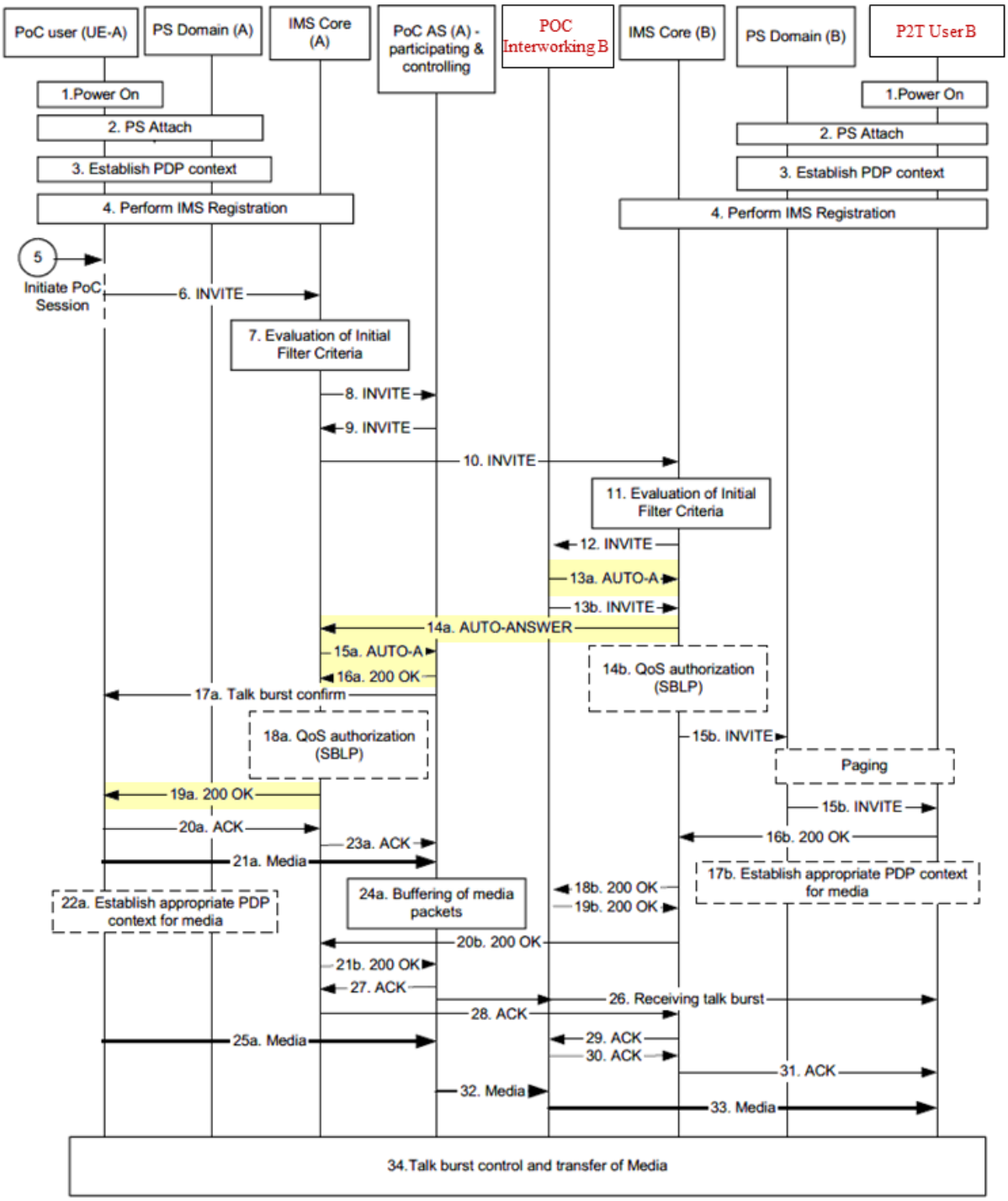

Figure 5.3.1: On-demand signalling with automatic answering

EX1033, 12.

234. PoC Interworking Service discloses that when the PoC Interworking Function B replaces the PoC Participating function B, the PoC Interworking Function will include a "+g.poc.interworking" tag ("Interworking Tag") in the contact header when generating or forward SIP requests and responses in scenario 1. EX1032, 11. Thus, in the figure above, PoC Interworking B will insert the Interworking Tag to the Auto-Invite message sent to the IMS Core B at step 13. It would have been obvious to a POSITA to include the Interworking Tag in subsequent messages in this message flow so that the Interworking Tag is eventually received at PoC Client A. A POSITA would have done so, for example, in order to notify PoC Client A of the presence of the gateway 10 so that PoC Client A could take actions, such as adjusting timing parameters and/or modifying the transmitted data rate to account for the gateway 10 and ISSI Protocol Module 260 in the path between it and P2T Client B. Thus, the Interworking Tag would be included in the Auto-Answer message at step 14a and 15a and in the subsequent OK message received at PoC Client A at step 19a. The presence of the Interworking Tag in the OK message at step 19a is an indication to the initiating endpoint PoC Client A that the proxy/ISSI protocol module 26 has been dynamically inserted to connect PoC Client A with the talk group, including P2T Client B as required by this limitation.

235. Accordingly, limitations [1c], [8d] and [12f] would have been obvious to a POSITA in view of the combination of TR23.979, PoC Interworking Service, PoC System Description, and Chowdhury.

E. Claim 2. The apparatus of claim 1, wherein the processor is further configured to identify media capabilities associated with the endpoint, the media capabilities employed by the IS to dynamically determine if the endpoint should be connected to the virtual talk group via the proxy.

Claim 13. The endpoint of claim 12, wherein the processor identifies media capabilities associated with the endpoint, the media capabilities employed by the interoperability server to dynamically determine if the endpoint should be connected to the virtual talk group via the proxy.

236. As I explained in section VIII.D (claims 1, 8, and 12), above, the apparatus of claim 1 and the endpoint of claim 12 are obvious over the combination of TR23.979, PoC Interworking Service, PoC System Description, Chowdhury and Jin.

237. Chowdhury further the limitations of these claims. Chowdhury discloses that the UE 335-1, which corresponds to a PoC Client A in PoC Interworking Services, communicates with the gateway 10 using RTP for media streams. EX1034, 9:55–65. In order to do so, the UE 335-1 must determine that it has that capability. Chowdhury further discloses that the Call Control Interop Module 242 in the IS must examine the ISSI-registration-response to the previously-sent ISSI-setup-request from the ISSI protocol module to determine if

the registration for the RTP communications with the RFSS 350 was successful. EX1034, 11:8–12. If the Call Control Interop Module 242 determines that the RTP registration was not successful, the registration has failed and no connection of the UD 335-1 to the talk group is made. EX1034, 11:13–24.

F. Claim 9. The method of claim 8, wherein the information associated with the initiating device includes at least one of media capability information associated with the initiating device or an identity of the initiating device.

238. As I explained in Section VIII.D (claims 1, 8, and 12), above, claim 8 is obvious over the combination of Chowdhury, PoC Interworking Service, PoC System Description, TR 23.979, Jin, and the knowledge of a POSITA.

239. As I explained in Section VIII.D.4 (claims 1a, 8b, and 12d), above, TR23.979 discloses that the initiating endpoint PoC Client A obtains an IP address for itself. An IP address is an identity of the initiating device. Thus, this claim is also obvious over these references.

G. Claim 10. The method of claim 8, further comprising transmitting media to the proxy over a private network through custom messages if it is evaluated that the proxy is employed.

240. As I explained in Section VIII.D (claims 1, 8, and 12), above, claim 8 is obvious over the combination of Chowdhury, PoC Interworking Service, PoC System Description, TR 23.979, Jin, and the knowledge of a POSITA.

241. Claim 10 recites a condition: "if it is evaluated that the proxy is employed." I have been informed by counsel for Petitioner that it is not necessary

to demonstrate the presence in the prior art of the step to be performed when the condition is satisfied in order to demonstrate unpatentability of a method claim. I have been informed that this is because claim 10 covers two methods as a result of the condition, one in which the condition is satisfied and one in which it is not, and therefore demonstrating the unpatentability of claim 8 is sufficient to demonstrate the unpatentability of claim 10.

H. Claim 11. The method of claim 8, further comprising, attaching the initiating device directly to the virtual talk group and transmitting media directly to the virtual talk group if the proxy is not employed to attach the initiating device to the virtual talk group.

242. As I explained in Section VIII.D (claims 1, 8, and 12), above, claim 8 is obvious over the combination of Chowdhury, PoC Interworking Service, PoC System Description, TR 23.979, Jin, and the knowledge of a POSITA.

243. Claim 11 recites a condition: "if the proxy is not employed to attach the initiating device to the virtual talk group." I have been informed by counsel for Petitioner that it is not necessary to demonstrate the presence in the prior art of the step to be performed when the condition is satisfied in order to demonstrate unpatentability of a method claim. I have been informed that this is because claim 11 claim covers two methods as a result of the condition, one in which the condition is satisfied and one in which it is not, and therefore demonstrating the

unpatentability of claim 8 is sufficient to demonstrate the unpatentability of claim 11.

IX. GROUND 4: CHOWDHURY, POC INTERWORKING SERVICE, POC SYSTEM DESCRIPTION, POC ARCHITECTURE, TR 23.979, JIN, AND TS23.060 RENDER OBVIOS CLAIMS 4, 5, 14 AND 16.

A. Claim 4. The apparatus of claim 2, further comprising a transmitter, wherein the transmitter transmits data to the proxy over a private channel if it is determined that the proxy is employed to connect the endpoint to the virtual talk group.

Claim 16. The endpoint of claim 12, wherein the processor causes the transmitter to transmit data to the proxy over a private channel if it is determined that the proxy is employed to connect the endpoint to the virtual talk group

244. As I explained in sections VIII.D (claims 1, 8, and 12) and VIII.E (claim 2), above, the apparatus of claim 2 and the endpoint of claim 12 are obvious over the combination of Chowdhury, PoC Interworking Service, PoC System Description, TR 23.979, Jin, and the knowledge of a POSITA.

245. The combination of those references and PoC Architecture in view of TS23.060 render obvious the additional limitations of claims 4 and 16. PoC Architecture discloses that communications "between the PoC Client and PoC Server . . . [are] protected with existing mechanisms being defined for radio access (3GPP GPRS or 3GPP2PDN) and with secured connections between the network domains." EX1029, 17 (Section 4.2.2). The existing mechanisms for GPRS radio access are defined in TS23.060, which requires "ciphering," *i.e.*, encryption, for

user data and signaling. EX1034, 57 (Section 6.8). The use of such ciphering for transmissions from and to US 335-1 results in a private channel.

B. Claim 5. The apparatus of claim 1, wherein the processor is further configured to determine an identity associated with the endpoint, the identity employed by the IS to dynamically determine if the endpoint should be connected to the virtual talk group via the proxy.

Claim 14. The endpoint of claim 12, wherein the processor determines an identity associated with the endpoint, the identity employed by the interoperability server to dynamically determine if the endpoint should be connected to a virtual talk group via the proxy

246. As I explained in section VIII.D (claims 1, 8, and 12), above, the apparatus of claim 1 and the endpoint of claim 12 are obvious over the combination of Chowdhury, PoC Interworking Service, PoC System Description, TR 23.979, and Jin.

247. The limitations of claims 5 and 14 are obvious over these references in view of TS23.060. As discussed above in Section VIII.D.4 (claims 1a, 8b, and 12d), the PoC Client A identifies its IP address, which is an identity of PoC Client A. That identity is included in the SIP Invite message that is eventually received at the PoC Interworking Function/Interoperability Module 240/IS in the Gateway 10 as discussed above in Section VIII.D.5 (claims 1b, 8c, and 12e). It would have been obvious to a POSITA to configure the IS to use that IP address to confirm that the connection being requested in the SIP invite is allowed, particularly since

the P25 network is a public safety network that would be expected to convey sensitive communications.

248. For example, PoC Architecture explains that a user must be authenticated based on the underlying IP address before it can be allowed to join the PoC session:

> The PoC Client SHALL be authenticated prior to accessing the PoC service. The PoC Server SHOULD rely on the security mechanisms provided by the underlying SIP/IP Core, for securing the service environments e.g. authentication of the service usage. It is assumed that the access level security is provided by the SIP/IP Core as defined in [RFC3261] to support the integrity and confidentiality protection of SIP signaling. The SIP/IP Core needs to ensure during registration that the registered PoC Address is allocated and authorized to be used by that PoC User in order to prevent spoofing attacks as identified in Appendix C. When the SIP/IP Core corresponds with 3GPP/3GPP2 IMS, and the User Equipment contains USIM/ISIM or UIM/R-UIM, the mutual authentication SHALL be applied as specified in [3GPP TS 33.203]/[3GPP2 S.R0086-0].

EX1029, 17.

X. AVAILABILITY FOR CROSS-EXAMINATION

249. In signing this declaration, I recognize that the declaration will be filed as evidence in a contested case before the Patent Trial and Appeal Board of the United States Patent and Trademark Office. I also recognize that I may be

subject to cross-examination in the case and that cross-examination will take place within the United States. If cross-examination is required of me, I will appear for cross-examination within the United States during a time as mutually agreed between the parties.

XI. RIGHT TO SUPPLEMENT

250. I reserve the right to supplement my opinions in the future to respond to any arguments that the Patent Owner raises. This declaration represents only those opinions that I have formed to date. I reserve the right to revise, supplement, and/or amend my opinions stated herein based on new information that becomes available to me and on my continuing analysis of the materials already provided.

XII. CONCLUSION

251. I may utilize the documents cited and/or listed herein, or portions of those documents, as exhibits at any hearing or trial in this proceeding. I may further prepare and use exhibits that summarize portions of my testimony or key terms or concepts presented therein, or other demonstrative exhibits, at any hearing or trial in this proceeding.

252. I reserve the right to supplement my testimony and this report in response to any judicial determinations, in response to the arguments expressed by the Patent Owner or the opinions of the Patent Owner's experts in this proceeding,

and/or in light of additional evidence or testimony brought forth at trial or otherwise brought to my attention after the date of my signature above.

EXHIBIT A

Dr. Sayfe Kiaei

School of Electrical, Computer and Energy Engineering
Arizona State University, Tempe, AZ 85287
Sayfe@asu.edu

Sayfe Kiaei
Professor, Motorola Endowed Chair Professor
School of Electrical, Computer and Energy Engineering, Arizona State University, Tempe, AZ

FIELDS OF SPECIALIZATION

- **Integrated Circuits (IC)**: Analog & Digital IC, Mixed-Signal IC, VLSI, Processor, ASIC, RFIC
- **Radio Frequency**: RF, Receiver, Transmitter, Synthesizer, Antenna, MIMO, RF system
- **Power Management**: Power Management IC, Battery Management, Energy System, Energy Management
- **Sensors**: RFID, ZIGBEE, BT, Custom Sensors, MICS, IOT, Bioelectronics, Bio-sensors, Hearing Aid sensors, Implanted devices electronics
- **Bio-Electronics**: Bio-Sensors, Hearing Aid, Implanted Bio-Electronics, Medical Implanted Communication System (MICS)
- **Signal Processing**: Digital Signal Processing, Adaptive Signal Processing, Video & Audio Signal Processing, Adaptive Audio Array processing, Audio and Acoustic & Speech processing
- **Wireless Communication Systems**: 1G-5G, 2-way radio, BT, WIFI, Sensors, ZIGBEE, wireless sensors
- **Wireline Communication System**: CABLE, DSL, Optical
- **Digital System**: VLSI, Processor, DSP processor

DEGREES

- **Ph.D.,** Electrical and Computer Engineering, Washington State University, 1987
- **M.S.**, Electrical and Computer Engineering, Washington State University, 1984
- **B.S.E.E.,** Electrical Engineering, Northeastern University, Washington State University, 1982

ACADEMIC POSITIONS

Fall 2001-Present: Professor, Motorola Endowed Chair Professor in Analog and RFIC School of Electrical, Computer and Energy Engineering, Arizona State University, Tempe, AZ

- **Professor:** Research and teaching in integrated circuits, RF circuits and systems, Communications, Wireless and Wireline transceiver, mixed-signal and Analog IC, Sensors, Power management IC, Signal processing, Bio-electronics, Signal Processing, Audio processing, GPS, wireless system
- **Research Projects**:
    - Analog and digital IC, Radio Frequency IC, RF transceiver
    - VLSI, Processor System Architecture, ASIC
    - Power Management IC, Battery Management & Sensing, Integrated Power Electronics
    - Digital Signal Processing, Audio processing, adaptive signal processing, Array processing, AI

  - Wireless communication system, wireless modems, 1G, 2G GSM, 3G CDMA, 4G LTE, 5G wireless mobile system, LTE, WiFi, Bluetooth, Wireless system standards
  - Wireline Communication system and transceivers, MODEM standards, CABLE MODEM DOCIS, DSL
  - Signal Processing, Digital Signal Processing, Adaptive Signal Processing
  - Adaptive Audio Array processing, Audio and Acoustic & Speech processing,
  - Sensors, Bio-electronics, Bio-sensors, Hearing Aid Electronics, Implanted devices electronics
- Research Funded by NSF, USAID, DARPA, JPL, NASA, Motorola Inc., Intel Inc., Broadcom, Qualcomm, Raytheon, General Dynamics, Texas Instruments, and over 10 other industries. List of Current significant research awards:
  - Center of Excellence for Energy (COE) in Egypt , Funding $22.5M
  - Partnership Center for Energy systems, USAID, 2015-2020, $18M. Principle Investigator
  - Solar Energy Development in ME, Private funds and World Bank, $2M
  - Connection One NSF Center, Director, 2004-Present, Total funding $5M, average annual funding over $750K.

2021-Present, Director and PI, USAID, Center of Excellence for Energy (COE) in Egypt , Funding $22.5M

- Director and PI: COE - Energy Center funded by the USAID.
  - USIAD Centers of Excellence for Energy (COE) - established the Center of Excellence for Energy (COE/E) in Egypt with funding and support from the United States Agency for International Development (USAID/Egypt) in November 2021. COE/E is a partnership between ASU-US and three Egyptian partner universities (EPUs): Ain Shams University (ASU-EG), Aswan University (AU), and Mansoura University (MU).

2004-2020, Director and founder of NSF IUCRC Center Connection One, School of Electrical, Computer, and Energy Engineering, Arizona State University, Tempe, AZ; https://connectionone.org

- The NSF Connection One Industry/University Cooperative Research Center was established the center in 2002 with focus on communication system, integrated Circuits and Systems, wireless system, RF, sensors, and related areas. The center has five university member with over 30 industrial members. Total funding over $10M.

2014-2020, Director, USAID, US-PCASE: Center for Advance Studies in Energy, Funding $18M.
https://uspcase.asu.edu/

- **Director and PI:** PCASE - Partnership Center for Energy systems, Energy Center funded by the USAID.
- USIAD Centers for Advanced Studies in Energy program (USPCAS-E) is a partnership between Arizona State University and two leading Pakistani universities: the National University of Science and Technology (NUST) Islamabad and the University of Engineering and Technology in

Peshawar (UET).

- PCASE has developed two new Graduate schools of Energy. Within 5 years, the center has over 1000 MS and PHD Students, with 14 new energy degrees in MS and PhD, two new building with 20+ energy labs in the power system, grid, power electronics, renewable energy, PV, Wind, Hydro, bio-fuel, fuel cell, batteries and storage, and thermal areas.

2008-2012: Associate Dean of Research, Ira A. Fulton Schools of Engineering, Arizona State University

Responsible for leading the research infrastructure, promoting and developing research programs with industry and federal agencies, leading large multi-university proposals, investing and providing seed funding to foster new research areas, and promoting graduate program in the college of engineering. Research Enterprise support included:

- Increase College of Engineering research funding from $50M to over $80M.
- Working with Vice President for Research, Dean's, and directors on University-wide research initiatives.
- Established the first NSF Engineering Research Center (ERC) at the ASU on Solar Energy QESST. Managed, organized and planned the ERC proposal process. ASU is the lead school partnering with MIT, Georgia Tech, U of Delaware, Cal-Tech, U of New Mexico, and UA.
- Lead several trans-disciplinary 4M research projects (4M: multi-million, multi-investigator, multi-disciplinary, multi-university grants) in energy, security, and related initiatives.
- Oversight of over 20 existing research centers in the college of Engineering.
- Engage with industry and federal government to establish new research collaborations.
- Organized workshops and supported proposals for NSF, NIH, DOE, DOD, DARPA, etc.
- Organized workshops for new assistant professors to apply for NSF CAREER Awards. ASU CAREER awards grew from 3 annual awards in 2008 to over 15 CAREER awards by 2012.
- Research Administration and pre-award proposal administration for the schools. Developed a decentralized research administration and advancement team for the Schools supporting 5 schools, 12 departments, over 220 engineering faculty, with funding over $70M.
- Annual budget over $7M for supporting research centers, seed funding for new center, cost sharing, proposal support, equipment and infrastructure support, graduate scholarships, and research administration.
- ADR Staffs included, Director of industrial and government liaison, Director of research administration, and 14 research advancement staff.
- Graduate Programs: Recruiting, Fellowships, marketing, outreach, coordination with departments

1997-2001, Adjunct Professor, Electrical and Computer Engineering Dept., The University of Texas, Austin, Texas, Taught graduate courses at UT Austin on Introduction to Telecommunication System and Digital Communications. Co-advised two Ph.D. program committees in IC design and Telecomm (while at Motorola)

1987-1993, NSF Center For Digital / Analog IC (CDADIC) Co-Director, NSF IUCRC Center director at Oregon State University. The CDADIC was established the center in 1987 with focus on integrated circuits at WSU, UW, and OSU with over 20 industrial members - https://cdadic.oregonstate.edu/

Dr. Sayfe Kiaei

School of Electrical, Computer and Energy Engineering
Arizona State University, Tempe, AZ 85287
Sayfe@asu.edu

1987-1993, Assistant / Associate Professor (Tenured) Electrical and Computer Engineering Department, Oregon State University, Corvallis, OR

- Research and classes in Electronics, DSP, Communication system and networks, Wireless systems, MODEMS. Graduated 30 MS and Ph.D. students.
- Faculty Chair, Computer Engineering Program, Developed a new Computer Engineering Program at OSU in 1987

INDUSTRIAL POSITIONS

1993-2001: Motorola Inc., Senior Member of Technical Staff, Personal Communication Sector, Austin, Texas - Worked projects related to wireless communications, two way radios, wireless networks, ADSL and MODEM RF, and related areas.

- **Motorola Cellular Division**, **Wireless Technology Center (WITC)**, **1997-2002.** Responsible for development of integrated circuits and systems for wireless handset. Lead number of projects including cellular (2G, 3G, 4G), wireless connectivity (Bluetooth and WIFI transceiver), GPS and location Receiver, wireless networks, 2-way radios and related areas. Worked on the development of various subcomponents including system design, link budget, RF front-end, RF receiver, RF transmitter, digital audio processing, audio processing, DSP, frequency synthesizer, ADC, DAC, filtering, analog front-end, power management, battery management, and baseband processor, baseband circuits and systems.
- **Motorola Semi-conductor products sector (SPS), Broadband Products Operations, 1995-1997,** Worked on the development of XDSL (ADSL, VDSL, G.lite), MODEM, and Optical broadband communication systems including OFDM, modulation, synchronization, equalization and the development of a single chip ADSL transceiver (*CopperGold*^{Tm}). The transceiver contained Analog Front End (A/D, D/A, Hybrid), custom DSP, baseband processor, DMT, modulation/demodulation, FFT, IFFT, echo canceler, time domain equalizer, front-end constellation mapping, Trellis code modulation, Viterbi decoder), audio processing, DSP, signal processing, and an on-chip DSP core.
- **Land Mobile Products Sector LMPS 1993-1995**, Responsible for Wireless digital two-way radios, developed RFIC, RF receiver, RF transmitter, digital audio processing, audio custom IC, DSP, frequency synthesizer, ADC, DAC, hot spot wireless network, next generation of digital two-way radios, *"Talk about Radios"*, Japanese cellular systems (PHS).
- **Standards,** Represented Motorola in various standards including 2G-4G, GPS, Bluetooth working group, WiFi, 802.11, and DSL standards including T1E1, International Telecommunication Unit (ITU), T1E1, ETSI, 3GPPP, Universal ADSL Working Group (UAWG), Bluetooth working group, G.Lite working group, etc.
- **University relations,** Responsible for the development of collaborative research programs with several universities. Responsible for funding research in the areas of Wireless Transceiver IC Design, RF, and mixed-signal and baseband system architecture.

1985-87: Member of Research Staff, Boeing Co., Bellevue, Wa, Flight Systems Research and Technology Center, summer. Design Engineer, Hardware and CAD tool development for system control.

Dr. Sayfe Kiaei

School of Electrical, Computer and Energy Engineering
Arizona State University, Tempe, AZ 85287
Sayfe@asu.edu

AWARDS

- IEEE Fellow 2004-Present
- IEEE Fellows CAS Committee Chair, 2009-2012
- Global Standards Award, For contributions in the International Telecommunication Unit (ITU) for Asymmetric Digital Subscriber Line (ADSL) G.Lite Standards. Motorola Inc., 1999.
- 10X Cycle Reduction Award, for development of new IC design process from DSP algorithm to IC layout, Motorola Inc., 1995.
- IEEE Darlington best paper Award, IEEE Circuits and Systems Society Best Paper Award, 1995. For "Characterization and Comparison of CMOS FSCL Circuits with Conventional CMOS for mixed-signal ICs," Published at: *IEEE Trans. on Circuits and Systems II, Sept. 93*.
- Carter Best Teaching Award, College of Engineering Best Teacher Award, Oregon State University, 1992. For *"outstanding and inspirational teaching in the College of Engineering"*. Award is selected by the confidential vote of all of the undergraduate students in the College of Engineering among over 125 professors in the College.
- Industrial University Fellowship (IUF) Award, National *Science Foundation*, 1993.
- Research Initiation Award, *National Science Foundation*, 1990-93.
- Outstanding Graduate Student Scholarship, Azur-*Data Inc*. WSU, 1984

RESEARCH PROJECTS

Partial list of Research Awards (1987-Present):

- **2021-2026 – U.S. Agency for International Development (USAID)**
  - COE – Center of Excellence for Energy, PI and Director, $22.5M.
- **2020-2022 - The National Science Foundation (NSF)**
  - SII Planning: Center for Next Generation Wireless Spectrum Sharing, PI, $300K.
- **2002-2020 – The National Science Foundation (NSF) - Connection One**
  - Industry/University Cooperative Research Center (IUCRC), NSF contribution $1.5M.
  - Annual Industry Contribution: Total over $7M.
- **2015-2016 – The National Science Foundation (NSF)**
  - Integration of Smart Utility Grids with Dynamic Optical Communication Networks for Intelligent Distribution of Power Workload and Data in Disaster, $200K
- **2015-2020 – U.S. Agency for International Development (USAID)**
  - PCASE – Center for Energy systems, PI and Director, $18M.
- **2013-2014 NASA**
  - Arizona Space Grant Consortium, NASA: Goddard Space Flight Center, RADHARD

electronics, $200K

- **2012-2015 – Solar Energy, Private Donor**
  - Solar Energy Development on international projects, $2M
- **2011-2014 – Semi-Conductor Research Corporation**
  - Self-Characterization for Calibration and Process Feedback of MEMS Devices, , $300K
- **2011-2013 - The National Science Foundation (NSF**)
  - Microwave & RF Bio-Sensors for Vital Signs Monitoring Device Design, $250K
- **2010-2011 – The National Science Foundation**
  - Adaptive Compensation of Analog circuits imperfections using DSP methods, $150K,
- **2010-2011 – The National Science Foundation**
  - Autonomous Self-Healing Sensor Network Radio and Mixed-Signal Readout System Design National Science Foundation (NSF), $300K
- **2010-2020 – The National Science Foundation (NSF**), $45M (
  - QESST NSF ERC Center on Solar Energy, Co-PI as the Associate Dean of Research, Testbed Director
- **2010-2015 - The National Science Foundation (NSF)**
  - Research Experience for Undergraduate Students, total $400K
- **2008-2013 - The Science Foundation of Arizona (SFAZ)**
  - PEPER- Photovoltaic Environmental Performance and Reliability for the Arizona-Wide Electric Grid, $1.2M.
- **2008-2009 - The National Science Foundation (NSF)**
  - Micropower MICS Band RF Transceiver Design (C1/TI Enhancement Project), $200K
- **2007-2011 – The National Science Foundation (NSF)**
  - Micro-Power Multi-Phase on-chip MEMS Hearing Aid, 2007-2011, $500K.
- **2007-2009 - The National Science Foundation (NSF)**
  - High Efficiency Power Delivery and Front-End Module Design for Implantable Bio-Sensors $480K
- **2005-2009 - The National Science Foundation (NSF**)
  - Cognitive MIMO Communications for Dynamic-Spectrum Wireless Networks $150K
- **2005-2009 - The National Science Foundation (NSF)**
  - Autonomous Self-Healing Sensor Network Radio, , $250K
- **2005-2008 BAE Systems**
  - Integrated on-chip Time Measurement Circuits LiDAR; $650K
- **2005-2008 - Freescale Semiconductor**
  - PWM, Battery & Power management, $150K

- **2005-2006 -** DOD: Defense Advanced Research Projects Agency (DARPA)
  - Radhard by Design - MRC/DARPA, Total funding $1.5M
- **2005-2010 - State of Arizona**
  - WINTECH- Wireless Integrated Nano Technology Center Support, 450K annually, total $2.5M
- **2004-2005 – NASA**
  - Integration of Ultra-Low power RF CMOS, $127K
- **2004-2008 – Deference Advance Research Project Agency (DARPA)**
  - Implanted Neural-Enabled Prostheses bio-sensor with Sensorimotor Integration, $500K
- **2004-2008 – Deference Advance Research Project Agency (DARPA**)
  - Nano-Mechanical RF Band pass resonator for 2GHZ RF Applications, with JPL, $2.2 M,
- **2003-2005 - DOD-ARMY-ARL: Army Research Office (ARO)**
  - Implanted Neuro-sensor, $175K
- **2002-2005 - Intel Corporation**
  - Design of Multi-Standard RF Front-End Circuits for Cellular and WiFi, $300K
- **2002 – SRC**
  - LOW POWER ULTRA - WIDE BAND GEOLACTION SYSTEMS, $65K.
- **2001-2003 - SRC (Semi-conductors research Corp)**
  - Ultra-Wideband Transceivers for cellular and WiFi 802.11, $225K
- **1987-1993 - The National Science Foundation**
  - Center for the Design of Analog/Digital IC's (CDADIC) 1987-1995, At Oregon State, $1.5M
- **1992-1994 – Motorola LMPS**
  - Low Power IF processing for Direct Digital Transceivers, $100K,
- **1993 - Hewlett-Packard**
  - Hewlett-Packard Faculty Chair position in Mixed-Signal IC, HP, $500K
- **1992-1993 - The National Science Foundation**
  - National Science Foundation, Motorola Inc. Faculty Industry Fellowship, $250K,
- **1992-1993 - The National Science Foundation**
  - National Science Foundation, Research Initiation Award (RIA) (same as current CAREER Award), Synthesis and Automatic Derivation of Multi-Rate VLSI Arrays for DSP Algorithms, $320K.
- **1988-1992 – Center for the Design of Analog/Digital IC's (CDADIC)**
  - CDADIC, various projects on Low-Noise Source Coupled Logic (SCL), Mixed-Mode IC's, CDACIC $350K.

- **1988- Tektronix Inc.**
  - Decimation Filters for A/D Noise Enhancements, Tektronix, Inc., $100K,
- **1987-1993 – DARPA, MOSIS, Tektronix, IT, Motorola**
  - Various grants for IC Fabrication (DARPA/MOSIS, VLSI)
  - Testing equipment (Tek, HP)
  - DSP system development (TI, Motorola)

PROFESSIONAL RECOGNITION

- IEEE Fellow, 2004-Present
- IEEE Fellow Committee Chair, CAS, 2008-2010
- IEEE Fellow Committee member, 2007-2010.
- IEEE Senior Member, 1993-Present, IEEE Member 1987-1992.
- IEEE Faculty Advisor, Oregon State University, 1987-1990
-
- **IEEE Editorials**
- IEEE Microwave Magazine, Editor,
- IEEE System Journal, Associate Editor, 2010-2011.
- IEEE Transactions on VLSI, Associate Editor, Jan 2001-2008.
- IEEE Communication Magazine, Editor, Feature Issues on "Circuits for Wireless and Wireline Communications," April 1999.
- IEEE Transactions on Microwave Theory and Techniques , editor, Special Issue on: "Radio Frequency IC Design," Dec. 1998.
- IEEE Transactions on Circuits and Systems-II, editor, Special Issue on: "Low-Power Wireless Communication Systems," June 1997.
- Associate Editor, IEEE Transactions on Circuits and Systems-II, 1993-1996.
- *Editor and Reviewer for many IEEE journals and conferences*
- *Founding member of IEEE RF Integrated Circuits Symposium*
- *Associate Editor, IEEE Communications, Tutorial & Surveys Magazine, 2006-2009.*
-
- **Conference Organizations**
- RFIC Executive Committee members, 2000-2017
- RFIC Steering Committee Member, RFIC symposium, 1996-2017.
- RFIC Founding member, 1995-96.
- Technical Program Chair, IEEE International Sym. on Circuits and Systems, Phoenix, AZ, 2002.
- ISSCC Admin Council, Conferences Committee 2000-2005.

- General Chair, Radio Frequency IC (RFIC) Symposium, Seattle, WA, 2002.
- Technical Program Chair, RFIC Symposium, Phoenix, AZ, 2001.
- Finance Chair, RFIC symposium, Boston, MA, 2000.
- Publicity Chair, RFIC symposium, Los Angeles, CA, 1999.
- Transactions Chair, RFIC symposium, Baltimore, MD, 1998.
- General Chair, Int. Sym. on Low-Power Electronics and Design (ISLPED), Monterey, CA, 97.
- Executive Committee Member, Int. Symp. On Low-Power Electronics and Design, 96-2000.
- Technical Program Committee Member of the following conferences:
  - International Conference on Circuits and Systems: 1996, 2000, 2001, 2004-2008
  - RFIC Symposium, 1996-2018
  - Application Specific Array Processing (ASAP): 2000-2002
  - Technical Program Chair, Int. Sym. on Low-Power Electronics and Design, Monterey, CA, 96.
  - Arizona Telecom Comm (ATIC)
  - GLS VLSI 1998, Lafayette, Louisiana, 1998
  - VLSI Design 98, Chennai, India, Jan. 1998.
  - ICECS, Lisbon, Portugal, 98.
  - Application Specific Array Processing, 1995-97, 2000
  - Vehicular Technology Conference, 1995-97.
  - Inter. Conf. on Intelligent Information Systems, D.C., 1994-95.
  - IEEE Pacific Rim Conference on Communications & Computers, Victoria, BC, Canada, 1991.

Invited talks, Panelist, Session Chairs, Workshop Speaker

- Conference chair, Technical Program committee chair and TPC member, tutorials, workshops, session chair, etc. in RFIC, ISSCC, ISCAS,VLSI, ICASSP, Low-Power Symposium, ICC, Application Specific IC's, IMS, MTT, etc.

CONSULTANT

- Intel Inc. Chandler, AZ, 2002-2006: Development of 3G-4G Wireless transceiver.
- Sony Inc., San Diego, CA and Tokyo, Japan, 2002-2004: Review and development of various telecom cellular system architecture including 3G system architecture, and GPS system.
- Motorola Inc. 2002-2005: Supporting development of BT, WiFi, E911, GPS integrated circuits and systems for the cellular and mobile handsets.
- Hewlett Packard, Corvallis, OR – 1990-1993: Various project on development of custom analog and digital IC's for printer and inkjet system. Some of this work was under consultation, and some under various research grants with Oregon State University.
- Tektronix Inc, Beaverton, OR - 1988-1990: Design and Implementation of Data acquisition system for Spectrum analyzer, development of custom DSP algorithm for the Tektronix

spectrum analyzer including system architecture, simulation, analysis, and design of oversampled data acquisition system.

- Boeing Commercial Aircraft, BCAC, Renton, WA - 1985-1987: Development of Airplane Controller Model, Simulation and Implementation of Flight control, Model reduction, and system control.

EXPERT WITNESS (Patent, IP)

Patent litigation, patent validity, IPR, expert reports, deposition, testimony, and trade secrets in the following areas (Complete list of cases available):

- Analog and Digital IC
- Radio Frequency Integrated Circuits
- Power Management, Battery Management, PMIC
- Wireless communication, 3G, 4G, OFDM, WiFi, 802.11, Bluetooth, and related areas
- Audio and acoustic signal processing, Audio Array processing
- Communication networks, Communication system
- Signal Processing, adaptive signal processing
- DSL, xDSL, VDSL, OFDM, Multi-Tone, and related areas
- Cable MODEM DOCIS MODEM, and related areas.
- Hearing AID
- Bio-Electronics, Heart monitoring system, Bi-sensors
- Satellite communications, Satellite Transceiver, ECHO and Multi-path cancelation circuits
- Wireline Communications, MODEM, Digital Subscriber Line, ADSL, VDSL, MODEM
- Wireless LAN, Wi-Fi, 802.11
- Bluetooth
- ZIGBEE
- GPS system, GPS receiver
- MEMS, Bulk Acoustic Wave Filters, SAW, MEMS resonators, MEMS accelerometer
- Wireless Standards (ITU, ETSI, 3GPPP, LTE) including AMPS, GSM, CDMA, WCDMA, LTE, 1G, 2G, 3G, 4G, BT, WiFi (802.11)
- Wireline standards including DSL, MODEM and DOCIS, and related standards ITU/ETSI

Dr. Sayfe Kiaei

School of Electrical, Computer and Energy Engineering
Arizona State University, Tempe, AZ 85287
Sayfe@asu.edu

PATENTS, PUBLICATIONS

- **Patents and Patent Applications**

ID	title	assignee	inventor/author
AU-2003222007-A8	Oscillator frequency correction in gps signal acquisition	Motorola Inc	Sayfe Kiaei, Thomas M King, George J Geier
WO-03093858-A3	Oscillator frequency correction in gps signal acquisition	Motorola Inc	Thomas M King, George J Geier, Sayfe Kiaei
WO-2004048909-A3	Compressed vector-based spectral analysis method and system for nonlinear rf blocks	Univ Arizona, Shahin Farahani, Sayfe Kiaei, Nazanin Darbanian	Shahin Farahani, Sayfe Kiaei, Nazanin Darbanian
US-2006226909-A1	Monolithic supply-modulated rf power amplifier and dc-dc power converter ic	Siamak Abedinpour, Sayfe Kiaei	Siamak Abedinpour, Sayfe Kiaei
US-7218085-B2	Integrated ZVS synchronous buck DC-DC converter with adaptive control	Arizona Board Of Regents	Siamak Abedinpour, Sayfe Kiaei
US-7372333-B2	Monolithic supply-modulated RF power amplifier and DC-DC power converter IC	Arizona Board Of Regents, Acting For And On Behalf Of Arizona State Univers	Siamak Abedinpour, Sayfe Kiaei
US-7528754-B1	Finite impulse response digital to analog converter	Arizona Board Of Regents	Bertan Bakkaloglu, Sayfe Kiaei, Shahin Taleie
US-2018049703-A1	Wireless in-shoe physical activity monitoring	Timothy W. Markison, Sayfe Kiaei, Gary McCoy	Timothy W. Markison, Sayfe Kiaei, Gary McCoy
US-10264996-B2	Method and apparatus for wirelessly monitoring repetitive bodily movements	Sayfe Kiaei	Sayfe Kiaei
US-2019231226-A1	Method and apparatus for wirelessly monitoring repetitive bodily movements	Sayfe Kiaei	Sayfe Kiaei
US-10653337-B2	Local object detection system	Timothy W. Markison, Sayfe Kiaei, Gary McCoy	Timothy W. Markison, Sayfe Kiaei, Gary McCoy
US-2020266708-A1	Electronic circuit and method of controlling three-level switching converters	Arizona Board Of Regents On Behalf Of Arizona State University	Parisa Mahmoudidaryan, Sayfe Kiaei, Bertan Bakkaloglu
US-11108325-B2	Electronic circuit and method of controlling three-level switching converters	Arizona Board Of Regents On Bbehalf Of Arizona State University	Parisa Mahmoudidaryan, Sayfe Kiaei, Bertan Bakkaloglu
US11129547B2	Wireless in-shoe physical activity monitoring	Sigmasense LLC	Timothy W. Markison, Sayfe Kiaei, Gary McCoy

- **Standards Contributions**

1. "Spectral Compatibility of ADSL: Frequency Overlap vs. FDM," T1E1, Dec. 97.
2. "Echo Cancellation for G.Lite Universal ADSL," OFDM, Universal ADSL Working Group, Atlanta, GA, Jan 98.
3. "8-bit QAM Constellation effects on reach for universal ADSL," OFDM, Universal ADAL Working Group, Atlanta, GA, Jan 98.
4. "Trellis Code Modulation coding gain for OFDM," Universal ADSL Working Group, Atlanta, GA, Jan 98.
5. "Monte Carlo Modeling and simulation of twisted pair wiring for OFDM," Universal ADAL Working Group, Atlanta, GA, Jan 98.
6. "Overlap Upstream/Downstream spectral allocation for OFDM ADSL ," International Telecommunication Unit, Chicago, March 98.
7. "Echo Cancellation for ADSL OFDM," International Telecommunication Unit, Antwerp, Belgium, 98.
8. "Performance of Echo Cancellation ADSL in OFDM system in the presence of Near End Cross Talk (NEXT)," International Telecommunication Unit, Honolulu, Hawaii, June 98.
9. Presentations and editorials at various XDSL and OFDM standards: ITU, ETSI, UAWG, and T1E1, 97-99.
10. Presentations and editorials at various 3G and 4G and wireless standards including ITU, 3GPPP, 802.11, BT,

- **Books**

- "Design, Modeling and Testing of Data Converters, P Carbone, S Kiaei," F Xu - 2014 – Springer, © Springer-Verlag Berlin Heidelberg 2014

- **Refereed Journal Papers**

1. CMOS Full-Duplex Mixer-First Receiver With Adaptive Self-Interference Cancellation S. -A. Ayati; A. Alizadeh; S. Kiaei, IEEE Transactions on Circuits and Systems I, Jan 2021.
2. A 10-W X-Ban Class-F High-Power Amplifier in a 0.25m GaAs pHEMT Technology, A. Alizadeh; M. Yaghoobi; M. Meghdadi; A. Medi; S. Kiaei, IEEE Transactions on Microwave Theory and Techniques, Jan 2021.

3. An X-Band Class-J Power Amplifier With Active Load Modulation to Boost Drain Efficiency A. Alizadeh; S. Hassanzadehyamchi; A. Medi; S. Kiaei, IEEE Transactions on Circuits and Systems I: Sep 2020
4. In-Field Recovery of RF Circuits from Wearout Based Performance Degradation D. Chang; J. N. Kitchen; S. Kiaei; S. Ozev, IEEE Transactions on Emerging Topics in Computing, Jun 2020
5. A 50-V Isolation, 100-MHz, 50-mW Single-Chip Junction Isolated DC-DC Converter With Self-Tuned Maximum Power Transfer Frequency, C. Liu; D. Mandal; Z. Yao; M. Sun; J. Todsen; B. Johnson; S. Kiaei; B. Bakkaloglu, IEEE Transactions on Circuits and Systems II: Express Brief, May 2019
6. Wideband Hybrid Envelope Tracking Modulator With Hysteretic-Controlled Three-Level Switching Converter and Slew-Rate Enhanced Linear Amplifier, P. Mahmoudidaryan; D. Mandal; B. Bakkaloglu; S. Kiaei, IEEE Journal of Solid-State Circuits, 2019.
7. Low-Power/Low-Voltage Integrated CMOS Sense Resistor-Free Analog Power/Current Sensor Compatible With High-Voltage Switching DC-DC Converter, S. Singh; D. Mandal; B. Bakkaloglu; S. Kiaei IEEE Transactions on Circuits and Systems I, 2019
8. Adaptively Biased Output Cap-Less NMOS LDO With 19 ns Settling Time, D. Mandal; C. Desai; B. Bakkaloglu; S. Kiaei, IEEE Transactions on Circuits and Systems II: Express Briefs, 2019
9. Chirag Desai; Debashis Mandal; Bertan Bakkaloglu; Sayfe Kiaei, "A 1.66 mV FOM Output Cap-Less LDO With Current-Reused Dynamic Biasing and 20 ns Settling Time," IEEE Solid-State Circuits Letters Year: 2018, Volume: 1, Issue: 2, Pages: 50-53
10. Debashis Mandal ; Chirag Desai ; Bertan Bakkaloglu ; Sayfe Kiaei, Adaptively Biased Output Cap-Less NMOS LDO with 19 ns Settling-Time;; IEEE Transactions on Circuits and Systems II: Feb 2019
11. Ayati, Mandal, Bakkaloglu, Kiaei, "Integrated Quasi-Circulator With RF Leakage Cancellation for Full-Duplex Wireless Transceivers,", IEEE Trans of Microwave theory and techniques, Dec 2017.
12. "A 50-mA 99.2% Peak Current Efficiency, 250-ns Settling Time Digital Low-Dropout Regulator With Transient Enhanced PI Controller", ChaiYong Lim ; Debashis Mandal ; Bertan Bakkaloglu ; Sayfe Kiaei; IEEE Transactions on Very Large Scale Integration (VLSI) Systems; Year: 2017, Volume: 25, Issue: 8; Pages: 2360 - 2370
13. Doohwang Chang; Jennifer N. Kitchen; Sayfe Kiaei; "Sule Ozev, In-field Recovery of RF Circuits from Wearout Based Performance Degradation", IEEE Transactions on Emerging Topics in Computing, 2017.
14. Edgar Martí-Arbona; Debashis Mandal; Bertan Bakkaloglu; Sayfe Kiaei, A High-Voltage-Compliant Current-to-Digital Sensor for DC–DC Converters in Standard CMOS Technology, IEEE Transactions on Power Electronics, 2017, Volume: 32, Issue: 3. Pp. 2180 - 2188
15. Michael Cheah ; Debashis Mandal ; Bertan Bakkaloglu ; Sayfe Kiaei, "A 100-mA, 99.11% Current Efficiency, 2-mVpp Ripple Digitally Controlled LDO With Active Ripple Suppression", Aug 2016.
16. Marti-Arbona, E.; Mandal, D.; Bakkaloglu, B.; Kiaei, S., "A High-Voltage Compliant Current-to-Digital Sensor for DC-DC Converters in Standard CMOS Technology," *IEEE Transactions on Power Electronics,* no. 99, 2016.
17. Chang, D.; Kitchen, J.N.; Bakkaloglu, B.; Kiaei, S.; Ozev, S., "Monitor-Based In-Field Wearout Mitigation for CMOS LC Oscillators," in *IEEE Transactions on Device and Materials Reliability*, vol. 16, no. 2, pp. 183-193, 2016.
18. Chang, D.; Kitchen, J.N.; Bakkaloglu, B.; Kiaei, S.; Ozev, S., "Design-Time Reliability Enhancement Using Hotspot Identification for RF Circuits," in *IEEE transactions on Very Large Scale Integration (VLSI) Systems,* -vol. 24, no. 3, pp. 1179-1183, 2016

19. Seungkee Min; Copani, T.; Kiaei, S.; Bakkaloglu, B., "A 90-nm CMOS 5-GHz Ring-Oscillator PLL With Delay-Discriminator-Based Active Phase-Noise Cancellation," *Solid-State Circuits, IEEE Journal of* , vol.48, no.5, pp.1151,1160, May 2013
20. Junghan Lee; Tino Copani; Terry Mayhugh Jr.; Bhaskar Aravind; Sayfe Kiaei; Bertan Bakkaloglu.;, "A 280 mW, 0.07% THD+N class-D audio amplifier using a frequency-domain quantizer," *Analog Integrated Circuits and Signal Processing*, 173-186, 2012.
21. Seungkee Min; Copali, T.; Kiaei, S.; Bakkaloglu, B.; , "A 90nm CMOS 5GHz ring oscillator PLL with delay-discriminator based active phase noise cancellation," *Radio Frequency Integrated Circuits Symposium (RFIC), 2012 IEEE*, pp. 173-176, 2012
22. Deligoz, I.; Naqvi, S.R.; Copani, T.; Kiaei, S.; Bakkaloglu, B.; Sang-Soo Je; Junseok Chae; , "A MEMS-Based Power-Scalable Hearing Aid Analog Front End," *Biomedical Circuits and Systems, IEEE Transactions on* , vol.5, no.3, pp.201-213, June 2011
23. Copani, T.; Seungkee Min; Shashidharan, S.; Chakraborty, S.; Stevens, M.; Kiaei, S.; Bakkaloglu, B.; , "A CMOS Low-Power Transceiver With Reconfigurable Antenna Interface for Medical Implant Applications," *Microwave Theory and Techniques, IEEE Transactions on* , vol.59, no.5, pp.1369-1378, May 2011
24. Khalil, W.; Shashidharan, S.; Copani, T.; Chakraborty, S.; Kiaei, S.; Bakkaloglu, B.; , "A $700\text{-}\mu\text{A}$ 405-MHz All-Digital Fractional- N Frequency-Locked Loop for ISM Band Applications," *Microwave Theory and Techniques, IEEE Transactions on* , vol.59, no.5, pp.1319-1326, May 2011
25. Lashkarian, N.; Nassiri-Toussi, K.; Jula, P.; Kiaei, S.; , "Performance Bound on Ergodic Capacity of MIMO Beam-Forming in Indoor Multi-Path Channels," *Communications, IEEE Transactions on* , vol.58, no.11, pp.3254-3264, November 2010
26. Hyungseok Kim; Junghan Lee; Copani, T.; Bazarjani, S.; Kiaei, S.; Bakkaloglu, B.; , "Adaptive Blocker Rejection Continuous-Time $\Sigma\Delta$ ADC for Mobile WiMAX Applications," *Solid-State Circuits, IEEE Journal of* , vol.44, no.10, pp.2766-2779, Oct. 2009
27. Kitchen, J.N.; Chu, C.; Kiaei, S.; Bakkaloglu, B.; , "Combined Linear and Δ -Modulated Switch-Mode PA Supply Modulator for Polar Transmitters," *Solid-State Circuits, IEEE Journal of* , vol.44, no.2, pp.404-413, Feb. 2009
28. Sang-Soo Je; Rivas, F.; Diaz, R.E.; Jiuk Kwon; Jeonghwan Kim; Bakkaloglu, B.; Kiaei, S.; Junseok Chae; , "A Compact and Low-Cost MEMS Loudspeaker for Digital Hearing Aids," *Biomedical Circuits and Systems, IEEE Transactions on* , vol.3, no.5, pp.348-358, Oct. 2009
29. Taleie, S.M.; Copani, T.; Bakkaloglu, B.; Kiaei, S.; , "A Linear Digital IF to RF SD DAC Transmitter With Embedded Mixer," *Microwave Theory and Techniques, IEEE Transactions on* , vol.56, no.5, pp.1059-1068, May 2008
30. Wing-Yee Chu; Bakkaloglu, B.; Kiaei, S.; , "A 10 MHz Bandwidth, 2 mV Ripple PA Regulator for CDMA Transmitters," *Solid-State Circuits, IEEE Journal of* , vol.43, no.12, pp.2809-2819, Dec. 2008.
31. Lyles, U. J.; Copani, T.; Bakkaloglu, B.; Kiaei, S.; , "An Injection-Locked Frequency-Tracking ΣΔ Direct Digital Frequency Synthesizer," *Circuits and Systems II: Express Briefs, IEEE Transactions on* , vol.54, no.5, pp.402-406, May 2007
32. Khalil, W.; Bakkaloglu, B.; Kiaei, S.; , "A Self-Calibrated On-Chip Phase-Noise Measurement Circuit With −75 dBc Single-Tone Sensitivity at 100 kHz Offset," *Solid-State Circuits, IEEE Journal of* , vol.42, no.12, pp.2758-2765, Dec. 2007
33. Chen, X.; Kiaei, S.; , "Pulse generation scheme for low-power low-complexity impulse ultra-wideband," *Electronics Letters* , vol.43, no.1, pp.44-45, Jan. 4 2007

34. Carlosena, A.; Wing-Yee Chu; Bakkaloglu, B.; Kiaei, S.; , "Randomized Carrier PWM With Exponential Frequency Mapping," *Power Electronics, IEEE Transactions on* , vol.22, no.3, pp.960-966, May 2007
35. Abedinpour, S.; Bakkaloglu, B.; Kiaei, S.; , "A Multistage Interleaved Synchronous Buck Converter With Integrated Output Filter in 0.18 µm SiGe Process," *Power Electronics, IEEE Transactions on* , vol.22, no.6, pp.2164-2175, Nov. 2007
36. Kitchen, J. N.; Deligoz, I.; Kiaei, S.; Bakkaloglu, B.; , "Polar SiGe Class E and F Amplifiers Using Switch-Mode Supply Modulation," *Microwave Theory and Techniques, IEEE Transactions on* , vol.55, no.5, pp.845-856, May 2007
37. A Multistage Interleaved Synchronous Buck Converter With Integrated Output Filter in 0.18 micron. , S Abedinpour, B Bakkaloglu, S Kiaei - Power Electronics, IEEE Transactions on, Nov. 2007, Volume: 22, pp - 2164-2175
38. Delta-sigma (ΔΣ) frequency synthesizers for wireless applications - B Bakkaloglu, S Kiaei, B Chaudhuri - Computer Standards & Interfaces, 2007 – Elsevier, Analog Computer Standards & Interfaces Volume 29, Issue 1 , January 2007, Pages 19-30
39. Pulse generation scheme for low-power low-complexity impulse ultra-wideband, Chen, X.; Kiaei, S.; Electronics Letters; Volume: 43 Issue: 1 Jan. 2007 ; Page(s): 44-45
40. Bandwidth extension technique for polar modulated RF transmitters ; Bakkaloglu, B.; Kiaei, S.; Dwyer, R.; Electronics Letters; Volume: 42 Issue: 8 13 April 2006 ; Page(s): 476- 478 ;
41. Frequency modulated bandpass SD chirp synthesizer for sensor applications; Chung, H.H.; Lyles, U.; Copani, T.; Bakkaloglu, B.; Kiaei, S.; Electronics Letters; Volume: 42 Issue: 16 August 3, 2006 ; Page(s): 917- 918
42. Radiation Hardened by Design RF Circuits Implemented in 0.13 mm CMOS Technology; Chen, W.; Pouget, V.; Gentry, G. K.; Barnaby, H. J.; Vermeire, B.; Bakkaloglu, B.; Kiaei, K.; Holbert, K. E.; Fouillat, P. ; Nuclear Science, IEEE Transactions on ; Volume: 53 Issue: 6 Part=1, Dec. 2006 ; Page(s): 3449-3454 ;
43. Analysis of Single Events Effects on Monolithic PLL Frequency Synthesizers ; Chung, H. H.; Chen, W.; Bakkaloglu, B.; Barnaby, H. J.; Vermeire, B.; Kiaei, S. ; Nuclear Science, IEEE Transactions on ; Volume: 53 Issue: 6 Part=1, Dec. 2006 ; Page(s): 3539-3543
44. Pulse generation scheme for low-power low-complexity impulse ultra-wideband
45. Chen, X.; Kiaei, S.; Electronics Letters; Volume: 43 Issue: 1 Jan. 4 2007; Page(s): 44-45
46. Bandwidth extension technique for polar modulated RF transmitters ; Bakkaloglu, B.; Kiaei, S.; Dwyer, R.; Electronics Letters; Volume: 42 Issue: 8 13 April 2006 ; Page(s): 476- 478 ;
47. Frequency modulated bandpass SD chirp synthesizer for sensor applications; Chung, H.H.; Lyles, U.; Copani, T.; Bakkaloglu, B.; Kiaei, S.; Electronics Letters; Volume: 42 Issue: 16 August 3, 2006 ; Page(s): 917- 918
48. Radiation Hardened by Design RF Circuits Implemented in 0.13 mm CMOS Technology; Chen, W.; Pouget, V.; Gentry, G. K.; Barnaby, H. J.; Vermeire, B.; Bakkaloglu, B.; Kiaei, K.; Holbert, K. E.; Fouillat, P. ; Nuclear Science, IEEE Transactions on ; Volume: 53 Issue: 6 Part=1, Dec. 2006 ; Page(s): 3449-3454 ;
49. Analysis of Single Events Effects on Monolithic PLL Frequency Synthesizers ; Chung, H. H.; Chen, W.; Bakkaloglu, B.; Barnaby, H. J.; Vermeire, B.; Kiaei, S. ; Nuclear Science, IEEE Transactions on ; Volume: 53 Issue: 6 Part=1, Dec. 2006 ; Page(s): 3539-3543
50. *"Channel Shortening For Discrete Multi-tone Transceivers To Maximize Channel Capacity" OFDM and DSL, G. Arslan, B. Evans, S. Kiaei; ; IEEE Transactions for Signal Processing, Vol 49; No. 12; Pp: 3123-3135. Dec 2001.*
51. *Optimum equalization of multicarrier systems: a unified geometric approach, for OFDM Lashkarian, N.; Kiaei, S. ; IEEE Transactions on Communications, Volume: 49 Issue: 10 , Oct. 2001 Page(s): 1762 –1769*

52. *Class of cyclic-based estimators for frequency-offset estimation of OFDM systems; Lashkarian, N.; Kiaei, S. , IEEE Transactions on Communications , Volume: 48 Issue: 12 , Jan 2001; Page(s): 2139 –2149*
53. *Systems and circuits for broadband communications; Kiaei, S. IEEE Communications Magazine , Volume: 37 Issue: 4 , April 1999 Page(s): 70 –70*
54. *Westgate, C.R.; Gupta, R.K.; Kiaei, S. ; Microwave Theory and Techniques, IEEE Transactions on , Volume: 46 Issue: 12 Part: 2 , Dec. 1998 ; Page(s): 2180 –2181*
55. *Introduction to the special issue on low power wireless communications Kiaei, S.; Friedman, E.G. Circuits and Systems II: IEEE Transactions on Analog and Digital Signal Processing, Volume: 44 Issue: 6 , June 1997 Page(s): 425 –427*
56. *Adaptive multiuser detector for asynchronous DS-CDMA in Rayleigh fading; Dutta, A.K.; Kiaei, S. , IEEE Transactions on Circuits and Systems II: Analog and Digital Signal Processing, Volume: 44 Issue: 6 , June 1997; Page(s): 468 -472*
57. "Noise Considerations for Mixed-Signal RF IC Transceivers," ACM Transaction on Wireless Networks, Vol. 4, pp. 41-53, 1998. [S. Kiaei, D. Allstot, N. Verghese, K. Hansen].
58. "A triangularly weighted zero-crossing detector providing delta-sigma frequency-to-digital conversion", *IEE Electronics Letters*, vol.33, no.13, pp.1121-1122, June 1997. [M. Hovin, S. Kiaei, T.S. Laude]
59. "Adaptive Multi-user Detector For Asynchronous DS- CDMA In Raleigh Fading," IEEE Transactions on CAS-II, pp. 468-473, June 97. [A.K. Dutta, S. Kiaei]
60. "Multi-Rate Transformation of Recurrence Equations for Regular VLSI Arrays, " Application Specific Array Processors, IEEE Press, 1994. [L. Aihua, S. Kiaei]
61. "Analog Logic Techniques," IEEE Circuits and Devices Magazine, pp. 12-21, May 1993. [S. Kiaei, D. Allstot, R. Zele]
62. "Overlapping Transformation for Time-Area Optimal VLSI arrays for Toeplitz Matrices," J. of Computer and Software Engineering, Vol. 3, #4, pp. 461-481, June 95. [S. Kiaei, Yuepeng Zheng]
63. "Characterization and Comparison of CMOS FSCL Circuits with Conventional CMOS Logic for Hybrid ICs," IEEE Trans. on Circuits and Systems, Sept. 93. [S.H. Chee, S. Kiaei, D. Allstot]
64. "Low Noise Logic for Mixed-Mode VLSI Circuits, Journal of microelectronics, " Vol. 23, No. 2, pp. 103-115, April 1992. [S. Kiaei, D. Allstot]
65. "Enhancement Source-Couple Logic ESCL," IEEE Trans. on Circuits, and Systems II: Analog and Digital Signal Processing, Vol. 39, No. 6, pp. 399-402, July92. [M. Maleki, S. Kiaei]
66. "Synthesis of Complex FSCL Blocks for Mixed Mode Systems," IEEE J. Solid State Circuits, Vol. 27, No. 8, pp. 1157-1168, Aug 1992. [S. Maskai, S. Kiaei, D. Allstot]
67. "Adaptive self-correcting D-S Modulators," IEE Electronics Letters, Vol. 28, No. 14, pp. 1288-1290, July 92. [S. Abdenadher, S. Kiaei, G. Temes, R. Schreier]
68. "On-line Adaptive Digital Correction of Dual-Quantization Delta-Sigma Modulators," IEE Electronics Letters, Vol. 28, No. 16, pp. 1511-1513, July 92.[Y. Yang, R. Schreier, G. Temes, S. Kiaei]

69. "Piecewise Linear Schedules for Recurrence Equations," VLSI Sig. Proc. VI, IEEE Press, 1992. [S. Rajopadhye, L. Mui, S. Kiaei]
70. "Automatic Synthesis and Derivations of VLSI Architectures for Recursive IIR Digital Filters," CAD for VLSI Design, 1990. [S. Kiaei, S. Rajopadhye]
71. "VLSI Design of Wavefront Array Processors for Recursive Filters," VLSI Signal Processing II, IEEE Press, pp. 152-164, 1988. [S. Kiaei, U.B. Desai]
72. "RFIC Design," IEEE Transactions on Microwave Theory and Techniques, v. 46, pp. 2180-2183, Dec. 98. [S. Kiaei, R. Gupta]
73. "Circuits for Wireless and Wireline Communications," IEEE Comm. Magazine, April 1999. [S. Kiaei]

-
- **Conference Publications**

1. " Switching Battery Charger with Cascaded Two Loop Control Using Time-Based Techniques,". ChaiYong Lim; Debashis Mandal; Bertan Bakkaloglu; Sayfe Kiaei, Published in: 2021 IEEE Applied Power Electronics Conference and Exposition (APEC), June 2021
2. 27.5 A 91%-Efficiency Envelope-Tracking Modulator Using Hysteresis-Controlled Three-Level Switching Regulator and Slew-Rate-Enhanced Linear Amplifier for LTE-80MHz Applications P. Mahmoudidaryan; D. Mandal; B. Bakkaloglu; S. Kiaei, 2019 IEEE International Solid- State Circuits Conference - (ISSCC), 2019
3. Integrated High-Efficiency Single-Inductor CCM Boost Converter for Multi-Junction PV Energy Harvesting, Q. Peng; D. Mandal; P. Mahmoudidaryan; B. Bakkaloglu; S. Kiaei, 2019 IEEE Applied Power Electronics Conference and Exposition (APEC), 2019
4. Sense resistor-free analog power sensor for boost converter with 14.1% gain error and 9.4% offset error, Shrikant Singh ; Debashis Mandal ; Bertan Bakkaloglu ; Sayfe Kiaei; 2018 IEEE 9th Latin American Symposium on Circuits & Systems (LASCAS), 2018
5. Ayati, S. A.; Mandal, D.; Bakkaloglu, B.; Kiaei, S., "Adaptive Integrated CMOS Circulator," in *IEEE Symposium on Radio Frequency Integrated Circuits (RFIC)*, May 2016
6. Khunti, H.; Krehbiel, J.; Cheah, M.; Bakkaloglu, B.; Kiaei, S., "SSB transceiver for vital sign detection," in *IEEE Biomedical Circuits and Systems Conference (BioCAS)*, Oct. 2015.
7. Marti-Arbona, E.; Mandal, D.; Bakkaloglu, B.; Kiaei, S., "Low power integrated on-chip current to digital converter," in *Applied Power Electronics Conference and Exposition (APEC), March 2015*
8. Marti-Arbona, E.; Mandal, D.; Bakkaloglu, B.; Kiaei, S., "PV panel power optimization using MPPT," in *Applied Power Electronics Conference and Exposition (APEC), March 2015*
9. Chang, D.; Ozev, S.; Bakkaloglu, B.; Kiaei, S.; Afacan, E.; Dundar, G., "Reliability enhancement using in-field monitoring and recovery for RF circuits," in *VLSI Test Symposium (VTS), 2014*
10. Deng, Lingfei; Kundur, Vinay; Naga, Naveen Sai Jangala; Ozel, Muhlis Kenan; Yilmaz, Ender; Ozev, Sule; Bakkaloglu, Bertan; Kiaei, Sayfe; Pratab, Divya; Dar, Tehmoor, "Electrical calibration of

spring-mass MEMS capacitive accelerometers," *Design, Automation & Test in Europe Conference & Exhibition (DATE), 2013* , vol., no., pp.571,574, 18-22 March 2013

11. Kiaei, M.S.; Fouli, K.; Scheutzow, M.; Maier, M.; Reisslein, M.; Assi, C., "Delay analysis for ethernet long-reach passive optical networks," *Communications (ICC), 2012 IEEE International Conference on* , vol., no., pp.3099,3104, 10-15 June 2012
12. Marti-Arbona, Edgar; Bakkaloglu, Bertan; Kiaei, Sayfe, "Ultra-Low Power Current-to-Digital Sensor for Switching DC-DC Converters," *Ph.D. Research in Microelectronics and Electronics (PRIME), 2012 8th Conference on* , vol., no., pp.1,4, 12-15 June 2012
13. Seungkee Min; Copani, T.; Kiaei, S.; Bakkaloglu, B., "A 90nm CMOS 5GHz ring oscillator PLL with delay-discriminator based active phase noise cancellation," *Radio Frequency Integrated Circuits Symposium (RFIC), 2012 IEEE* , vol., no., pp.173,176, 17-19 June 2012
14. A fully integrated pulsed-LASER time-of-flight measurement system with 12ps single-shot precision; Copani, T.; Vermeire, B.; Jain, A.; Karaki, H.; Chandrashekar, K.; Goswami, S.; Kitchen, J.; Chung, H.H.; Deligoz, I.; Bakkaloglu, B.; Barnaby, H.; Kiaei, S.; Custom Integrated Circuits Conference, 2008. CICC 2008. IEEE; 21-24 Sept. 2008. 359-362.
15. A Self-Calibrated On-chip Phase-Noise-Measurement Circuit with -75dBc Single-Tone Sensitivity at 100kHz Offset. Khalil, W.; Bakkaloglu, B.; Kiaei, S. Solid-State Circuits Conference, 2007. ISSCC 2007. Digest of Technical Papers. IEEE International. 11-15 Feb. 2007. 546-621.
16. Supply modulators for RF polar transmitters. Kitchen, J.; Chu, C.; Kiaei, S.; Bakkaloglu, B. Radio Frequency Integrated Circuits Symposium, 2008. RFIC 2008. IEEE. June 17 2008-April 17 2008. 417-420.
17. A 700uA, 405MHz fractional-N All digital frequency-locked loop for MICS band applications. Shashidharan, S.; Khalil, W.; Chakraborty, S.; Kiaei, S.; Copani, T.; Bakkaloglu, B. Radio Frequency Integrated Circuits Symposium (RFIC), 2010 IEEE. 23-25 May 2010. 409-412.
18. A 14-GHz CMOS receiver with local oscillator and IF bandpass filter for satellite applications. Wenjian Chen; Copani, T.; Barnaby, H.J.; Kiaei, S. Radio Frequency Integrated Circuits Symposium, 2009. RFIC 2009. IEEE. 7-9 June 2009. 123-126.
19. (Invited) analysis and modeling of noise folding and spurious emission in wideband fractional-N synthesizers. Khalil, W.; Hedayati, H.; Bakkaloglu, B.; Kiaei, S. Radio Frequency Integrated Circuits Symposium, 2008. RFIC 2008. IEEE. June 17 2008-April 17 2008. 291-294.
20. Combined Linear and Î”-Modulated Switched-Mode PA Supply Modulator for Polar Transmitters. Kitchen, J.; Wing-Yee Chu; Deligoz, I.; Kiaei, S.; Bakkaloglu, B. Solid-State Circuits Conference, 2007. ISSCC 2007. Digest of Technical Papers. IEEE International. 11-15 Feb. 2007. 82-588.
21. A 24GHz CMOS digitally modulated polar power amplifier with embedded FIR filtering. Hyungseok Kim; Copani, T.; Kiaei, S. Ph.D. Research in Microelectronics and Electronics (PRIME), 2010 Conference on. 18-21 July 2010. 1-4.
22. A 0.18Î¼m CMOS fully integrated RFDAC and VGA for WCDMA transmitters. Taleie, S.M.; Yongping Han; Copani, T.; Bakkaloglu, B.; Kiaei, S. Radio Frequency Integrated Circuits Symposium, 2008. RFIC 2008. IEEE. June 17 2008-April 17 2008. 157-160.
23. A 96Gb/s-Throughput Transceiver for Short-Distance Parallel Optical Links. Goswami, S.; Copani, T.; Jain, A.; Karaki, H.; Vermeire, B.; Barnaby, H.J.; Fetzer, G.; Vercillo, R.; Kiaei, S. Solid-State Circuits Conference, 2008. ISSCC 2008. Digest of Technical Papers. IEEE International. 3-7 Feb. 2008. 230-609.
24. A 0.13-Î¼m CMOS Ultra-Low Power Front-End Receiver for Wireless Sensor Networks. Wenjian Chen; Copani, T.; Barnaby, H.J.; Kiaei, S. Radio Frequency Integrated Circuits (RFIC) Symposium, 2007 IEEE. 3-5 June 2007. 105-108.

25. A low noise buck converter with a fully integrated continuous time Î£Î" modulated feedback controller. Wong, M.; Bakkaloglu, B.; Kiaei, S. Custom Integrated Circuits Conference, 2007. CICC '07. IEEE. 16-19 Sept. 2007. 377-380.
26. A 10MHz-Bandwidth 2mV-Ripple PA-Supply Regulator for CDMA Transmitters. Wing-Yee Chu; Bakkaloglu, B.; Kiaei, S. Solid-State Circuits Conference, 2008. ISSCC 2008. Digest of Technical Papers. IEEE International. 3-7 Feb. 2008. 448-626.
27. A Bandpass Î"Î£ DDFS-Driven 19GHz Frequency Synthesizer for FMCW Automotive Radar. Hoon Hee Chung; Lyles, U.; Copani, T.; Bakkaloglu, B.; Kiaei, S. Solid-State Circuits Conference, 2007. ISSCC 2007. Digest of Technical Papers. IEEE International. 11-15 Feb. 2007. 126-591.
28. A 2mW CMOS MICS-band BFSK transceiver with reconfigurable antenna interface. Seungkee Min; Shashidharan, S.; Stevens, M.; Copani, T.; Kiaei, S.; Bakkaloglu, B.; Chakraborty, S. Radio Frequency Integrated Circuits Symposium (RFIC), 2010 IEEE. 23-25 May 2010. 289-292.
29. A 14mW 5Gb/s CMOS TIA with gain-reuse regulated cascode compensation for parallel optical interconnects. Goswami, S.; Silver, J.; Copani, T.; Wenjian Chen; Barnaby, H.J.; Vermeire, B.; Kiaei, S. Solid-State Circuits Conference - Digest of Technical Papers, 2009. ISSCC 2009. IEEE International. 8-12 Feb. 2009. 100-101a.
30. A 0.13-Âµm CMOS local oscillator for 60-GHz applications based on push-push characteristic of capacitive degeneration. Copani, T.; Hyungseok Kim; Bakkaloglu, B.; Kiaei, S. Radio Frequency Integrated Circuits Symposium (RFIC), 2010 IEEE. 23-25 May 2010. 153-156.
31. A 90nm CMOS 5GHz ring oscillator PLL with delay-discriminator based active phase noise cancellation. Seungkee Min; Copani, T.; Kiaei, S.; Bakkaloglu, B. Radio Frequency Integrated Circuits Symposium (RFIC), 2012 IEEE. 17-19 June 2012. 173-176.
32. A BiCMOS voltage controlled oscillator and frequency doubler for K-band applications. Copani, T.; Bakkaloglu, B.; Kiaei, S. Radio Frequency Integrated Circuits Symposium, 2008. RFIC 2008. IEEE. June 17 2008-April 17 2008. 537-540.
33. Dynamic calibration of feedback DAC non-linearity for a 4th order CT sigma delta for digital hearing aids. Naqvi, S.R.; Deligoz, I.; Kiaei, S.; Bakkaloglu, B. SOC Conference (SOCC), 2011 IEEE International. 26-28 Sept. 2011. 109-113.
34. Ultra-Low Power Current-to-Digital Sensor for Switching DC-DC Converters. Marti-Arbona, Edgar; Bakkaloglu, Bertan; Kiaei, Sayfe. Ph.D. Research in Microelectronics and Electronics (PRIME), 2012 8th Conference on. 12-15 June 2012. 1-4.
35. Dynamic calibration of feedback DAC non-linearity for a 4th order CT sigma delta for digital hearing aids
    Naqvi, S.R.; Deligoz, I.; Kiaei, S.; Bakkaloglu, B. – 2011 IEEE International SOC Conference (SOCC), 2011
36. Ultra-Low Power Current-to-Digital Sensor for Switching DC-DC Converters
    Marti-Arbona, Edgar; Bakkaloglu, Bertan; Kiaei, Sayfe – 2012 8th Conference on Ph.D. Research in Microelectronics and Electronics (PRIME), 2012.
37. A Bandpass S-D DDFS-Driven 19GHz Frequency Synthesizer for FMCW Automotive Radar
    HH Chung, U Lyles, T Copani, B Bakkaloglu, S Kiaei - Solid-State Circuits Conference, 2007. ISSCC 2007.
38. A 0.13-micron CMOS Ultra-Low Power Front-End Receiver for Wireless Sensor Networks
    W Chen, T Copani, HJ Barnaby, S Kiaei - Radio Frequency Integrated Circuits (RFIC) Symposium, 2007,
39. A Self-Calibrated On-chip Phase-Noise-Measurement Circuit with -75dBc Single-Tone Sensitivity at 100kHz Offset, Khalil, W. Bakkaloglu, B. Kiaei, S. , Solid-State Circuits Conference, 2007. ISSCC 2007. Digest of Technical Papers. IEEE International, 11-15 Feb. 2007

40. Combined Linear and SD-Modulated Switched-Mode PA Supply Modulator for Polar Transmitters J Kitchen, WY Chu, I Deligoz, S Kiaei, - Solid-State Circuits Conference, 2007. ISSCC 2007. Digest of, 2007 - Solid-State Circuits Conference, 2007. ...
41. A Low Noise Buck Converter with a Fully Integrated Continuous Time SD Modulated Feedback Controller, M Wong, B Bakkaloglu, S Kiaei, F Semiconductor, AZ … - Custom Integrated Circuits Conference, 2007. CICC'07. IEEE, 2007
42. Tri-mode integrated receiver for GPS, GSM 1800, and WCDMA ; Darbanian, N.; Farahani, S.; Kiaei, S.; Bakkaloglu, B.; Smith, M.; Radio Frequency Integrated Circuits (RFIC) Symposium, 2006 IEEE ; 11-13 June 2006 ;
43. A low power bandpass ΣΔ modulator injection locked synthesizer ; Hoon Hee Chung; Lyles, U.; Copani, T.; Bakkaloglu, B.; Kiaei, S. ; Radio Frequency Integrated Circuits (RFIC) Symposium, 2006 IEEE; 11-13 June 2006
44. Linear RF polar modulated SiGe Class E and F power amplifiers ; Kitchen, J.D.; Deligoz, I.; Kiaei, S.; Bakkaloglu, B. ; Radio Frequency Integrated Circuits (RFIC) Symposium, 2006 IEEE ; 11-13 June 2006
45. Randomized carrier PWM with exponential frequency mapping; Carlosena, A.; Wing-Yee Chu; Bakkaloglu, B.; Kiaei, S. ;Circuits and Systems, 2006. ISCAS 2006. Proceedings. 2006 IEEE International Symposium on; 21-24 May 2006
46. A 65MHZ switching rate, two-stage interleaved synchronous buck converter with fully integrated output filter ; Abedinpour, S.; Bakkaloglu, B.; Kiaei, S. ; Circuits and Systems, 2006. ISCAS 2006. Proceedings. 2006 IEEE International Symposium on; 21-24 May 2006
47. A Multi-Stage Interleaved Synchronous Buck Converter with Integrated Output Filter in a 0.18/spl mu/ SiGe process ; Abedinpour, S.; Bakkaloglu, B.; Kiaei, S. ; Solid-State Circuits, 2006 IEEE International Conference Digest of Technical Papers; Feb. 6-9, 2006 ; Page(s): 1398- 1407
48. A Bandpass ΣΔ RF-DAC with Embedded FIR Reconstruction Filter ; Taleie, S.M.; Copani, T.; Bakkaloglu, B.; Kiaei, S. ; Solid-State Circuits, 2006 IEEE International Conference Digest of Technical Papers ; Feb. 6-9, 2006 ; Page(s): 2370- 2379
49. S. Kiaei, S. M. Taleie, B. Bakkaloglu, "Low-power high-Q NEMS receiver architecture", *IEEE International Symposium on Circuits and Systems*, Vol.5, 23-26 May 2005 Page(s):4401 - 4404
50. Kiaei, Overview of Transmit and Linear PA Up-converters, Vol 5, May 05; RFIC 2005, Workshops, PP. 28-45.
51. S. Kiaei, RF Design of Up and Down converters, S. Kiaei, Vol. 5, May 05, RF Building Blocks workshop, PP. 45-68. Location: Long Beach Convention Center, Room 102AB
52. S. Kiaei, IMS 2005, DC/DC converters and Noise Shaping Techniques for Switched-Mode DC/DC Converters for RF Transceivers, Vol. 5, May 05, Monilithic Power Management workshop, PP. 98-112.
53. Darbanian, N.; Kiaei, S.; Farahani, S.;, Optimum design and trade-offs for a triple-band LNA for GSM, WCDMA and GPS applications, SOC Conference, 2004. Proceedings. IEEE International , 12-15 Sept. 2004, PP 383-386
54. Xiaomin Chen; Kiaei, S.;, An improved delay-hopped transmitted-reference ultra wideband architecture, SOC Conference, 2004. Proceedings. IEEE International , 12-15 Sept. 2004, Pages:359 - 362
55. Taleie, S.M.; Jiandong Zhang; Kiaei, S.;, Nonlinearity and power consumption analysis of a low-IF MEMS receiver architecture, Circuits and Systems, 2004. MWSCAS '04. The 2004 47th Midwest Symposium on , Volume: 3 , July 25-28, 2004; Pages:III_363 - III_366
56. Kiaei, S.; Smith, M.;, Receiver design for 4G, Microwave Symposium Digest, 2004 IEEE MTT-S International , Volume: 1 , 6-11 June 2004, Pages:VI - VI

57. Badillo, D.A.; Kiaei, S.;, Comparison of contemporary CMOS ring oscillators, Radio Frequency Integrated Circuits (RFIC) Symposium, 2004. Digest of Papers. 2004 IEEE , 6-8 June 2004, Pages:281 - 284
58. Badillo, D.A.; Kiaei, S.;, A low phase noise 2.0 V 900 MHz CMOS voltage controlled ring oscillator, Circuits and Systems, 2004. ISCAS '04. Proceedings of the 2004 International Symposium on , Volume: 4 , 23-26 May 2004, Pages: IV - 533-6 Vol.4
59. Xuejin Wang; Aykut Dengi; Sayfe Kiaei;, A high IIP3 X-band BiCMOS mixer for radar applications, Circuits and Systems, 2004. ISCAS '04. Proceedings of the 2004 International Symposium on , Volume: 1 , 23-26 May 2004, Pages:I-113 - I-116 Vol.1
60. Shahin Farahani, Nazanin Darbanian, and Sayfe Kiaei, Simulation of Nonlinear Systems with Sparse Input Vectors Using CRC Techniques, Proceedings of 11th IEEE workshop on Digital Signal Processing, Aug 2004, NM, Vo I, PP VoI
61. Shahin Farahani, Nazanin Darbanian, and Sayfe Kiaei, AN EDUCATIONAL TOOL AND TEACHING GUIDELINES FOR NONLINEAR SYSTEMS WITH SPARSE INPUTS , Proceedings of 3rd IEEE workshop on Signal Processing for Education, Aug 2004, NM, Vol I, PP Vol L
62. Shahin Farahani, Nazanin Darbanian, and Sayfe Kiaei, Compressed Vector-Based Spectral Analysis Technique for Analysis and Simulation of Nonlinear Systems , Proceedings of IEEE Wireless and Microwave Technology Conference, Florida 2004 pp.45
63. Shahin Farahani, Nazanin Darbanian, Sayfe Kiaei, Ali Afsahi, Hang Song , A SiGe BiCMOS 0.18 Multi-Mode RF front-end for GSM 1.8, GPS, and WCDMA Applications, Proceedings of Software Define Radio technical conference, Phoenix, AZ 2004, Workshop Vol, Section III, PP 301-325
64. S. Farahani, N. Darbanian, S. Kiaei, , "Compressed Vector-Based Spectral Analysis Technique for RF Nonlinear Analysis and Simulation of Circuits and Systems", , 6TH IEEE Wireless and Microwave Technology Conference, Florida 2004, Section I, PP 40-45
65. N. Darbanian S. Farahani, A. Afsahi, H. Song, S. Kiaei, M. Smith, "A SiGe BiCMOS 0.18un Multi-Mode RF front-end for GSM 1.8, GPS, and WCDMA Applications" accepted for presentation in IEEE WAMI conference, Florida 2004, 6TH IEEE Wireless and Microwave Technology Conference , Florida 2004,Section I, pp 45-49
66. S.M Taleie, J. Zhang, S. Kiaei, A New Low-IF Receiver using High-Q MEMS filter, 6TH IEEE Wireless and Microwave Technology Conference -Florida 2004, Section II, pp 90-95
67. S. Kiaei, S. M. Taleie, B. Bakkaloglu, "Low-power high-Q NEMS receiver architecture", *IEEE International Symposium on Circuits and Systems*, Vol.5, 23-26 May 2005 Page(s):4401 - 4404
68. Kiaei, Overview of Transmit and Linear PA Up-converters, Vol 5, May 05; RFIC 2005, Workshops, PP. 28-45.
69. S. Kiaei, RF Design of Up and Down converters, S. Kiaei, Vol. 5, May 05, RF Building Blocks workshop, PP. 45-68. Location: Long Beach Convention Center, Room 102AB
70. S. Kiaei, IMS 2005, DC/DC converters and Noise Shaping Techniques for Switched-Mode DC/DC Converters for RF Transceivers, Vol. 5, May 05, Monilithic Power Management workshop, PP. 98-112.
71. "A Bandpass Delta Sigma RF-DAC with Embedded FIR Reconstruction Filter," International Solid State Circuits Conference (ISSCC) 2006 [Taleie, S.M.; Copani, T.; Bakkaloglu, B.; Kiaei, S.]
72. "Compressed Vector-Based Spectral Analysis Technique for RF Nonlinear Analysis and Simulation of Circuits and Systems," Proc. of IEEE WAMI Conference, Clearwater, FL, June 2004. [S. Farahani, N. Darbanian, S. Kiaei]

73. "A SiGe BiCMOS 0.18un Multi-Mode RF front-end for GSM 1.8, GPS, and WCDMA Applications," Proc. of IEEE WAMI Conference, Clearwater, FL, June 2004. [N. Darbanian S. Farahani, A. Afsahi, H. Song, S. Kiaei, M. Smith]
74. "Delta-Sigma Data Converters for Wireless Applications," Proc. of 2003 International Workshop on ADC's, June 2003. [Chaudhuri, Bikram, Kiaei, S.]
75. "A Pseudo-Concurrent 0.18 /spl mu/m Multi-Band CMOS LNA," Proc. of 2003 IEEE MTT-S International, June 2003. [Lavasani, S.H.M.; Chaudhuri, B.; Kiaei, S.]
76. "Monolithic Supply Modulated RF Power Amplifier and DC-DC Power Converter IC," Proc. of 2003 IEEE MTT-S International, June 2003. [Abedinpour, S.; Deligoz, K.; Desai, J.; Figiel, M.; Kiaei, S.]
77. "A Novel Low Phase Noise 1.8V 900MHz CMOS Voltage Controlled Ring Oscillator," Proc. of ISCAS '03 Volume: 3, May, 2003. [Badillo, D.A.; Kiaei, S.]
78. "Monolithic Distributed Power Supply for a Mixed-Signal Integrated Circuit," Circuits and Systems, 2003. ISCAS '03. Proceedings of the 2003 International Symposium on, Volume: 3, 2003 [Abedinpour, S.; Kiaei, S.]
79. "A Pseudo-Concurrent 0.18 /spl mu/m Multi-Band CMOS LNA," Radio Frequency Integrated Circuits (RFIC) Symposium, 2003 IEEE, June 2003 [Lavasani, S.H.M.; Chaudhuri, B.; Kiaei, S.]
80. "Parasitic-aware synthesis of RF CMOS switching power amplifiers," Circuits and Systems, 2002. ISCAS 2002. IEEE International Symposium on , Volume: 1 , 2002 [Kiyong Choi; Allstot, D.J.; S. Kiaei]
81. "Monocycle shapes for ultra wideband system**,"** Circuits and Systems, 2002. ISCAS 2002. IEEE International Symposium on, Volume: 1, 2002, PP. 597 –600, [Xiaomin Chen; Kiaei, S.]
82. "An all-digital programmable digitally-controlled-oscillator (DCO) for digital wireless applications," Circuits and Systems, 2002. ISCAS 2002. IEEE International Symposium on, Volume: 4, 2002, [Abdollahi, S.R.; Kiaei, S.; Bakkaloglu, B.; Fakhraie, S.M.; Anvari, R.; Abdollahi, S.E.]
83. "Optimum equalization of multicarrier systems: a unified geometric approach Communications, IEEE Transactions on, Volume: 49 Issue: 10, Oct. 2001; Page(s): 1762 –1769, [Lashkarian, N.; Kiaei, S.]
84. "Equalization for Discrete Multitone Transceivers to Maximize Bit Rate," IEEE Transactions on Signal Processing, Volume: 48, Issue:12, Dec. 2001; Pgs. 3123-3135, [Arslan, Evans, Kiaei]
85. "Performance of Differentially Detected DQPSK in the presence of I/Q Phase Imbalance," International Symposium on Circuits and Systems, Zurich, Switzerland, June 2000. [M. Scarpa, J. Vogel, J. Stonick, S. Kiaei]
86. "BER of differentially detected π/4 DQPSK in the presence of quadrature gain imbalance", 1999 IEEE Wireless Communications and Networking Conference, WCNC 1999, September 21-24, 1999, New Orleans, Louisiana, USA**.**, 1999, [M. Scarpa, J. Vogel, J. Stonick, S. Kiaei]; 201-205;
87. "Globally Optimal ML Estimation of Timing and frequency offset in OFDM Systems," International Communications Conference, New Orleans, Louisiana, 2000. [N. Lashkarian, S. Kiaei]
88. "Minimum variance unbiased estimation of frequency offset in OFDM systems, a blind synchronization approach." Int. Conf. On Acoustics, Speech and Signal Processing, Istanbul, Turkey, 2000. [N. Lashkarian, S. Kiaei]

89. "Optimum Channel Shortening for Multicarrier Transceivers, " Int. Conf. On Acoustics, Speech and Signal Processing, Istanbul, Turkey, 2000.[G. Arslan, B. Evans, S. Kiaei]
90. "Class of Cyclic-Based Estimators for Frequency-Offset Estimation of OFDM Systems," IEEE Transactions on Communications, Volume: 48, Issue:12, Dec. 2000; Pgs. 2139-2149, [Lashkarian, Kiaei]
91. "Optimum Equalization of Multi-Carrier Systems Via Projection onto Convex Set," International Communication Conference, Vancouver, British Columbia, Canada, 1999. [N. Lashkarian, S. Kiaei]
92. "BER of Differentially Detected pi/4 DQPSK in the Presence of Quadrature Gain Imbalance" IEEE Wireless Communications and Networking Conference, Sept. 1999. [M. Scarpa, J. Vogel, J. Stonick, S. Kiaei]*
93. "Fast Equalizers for Finite Length MMSE Equalization with Application to DMT ADSL System," Int. Conf. On Acoustics, Speech and Signal Processing, vol. 5, pp. 2753-2756, Phoenix, AZ, 1999. [N. Lashkarian, S. Kiaei]
94. "Communication and Signal processing Circuits for ADSL/VDSL system," international workshop on design of mixed-mode integrated circuits and applications, Guanajuato, Mexico, July 1998. [S. Kiaei]
95. "Analysis of Adaptive CMOS Down Conversion Mixers," Proceedings of the 8th Great Lakes Symposium on VLSI, Feb. 1998. [Sandalci, C.K.; Kiaei, S.]
96. "DC offset correction for direct conversion transceivers," Great Lake VLSI Symposium, Lafayette, Louisiana, 1998. [C. Sandalci, S. Kiaei]*
97. "Fundamentals of ADSL system," SuperComm, Atlanta, GA, June 1998. [S. Kiaei]
98. "Low-Power RF Design," Design Automation Conference (DAC), Anaheim, CA, June 1997. [S. Kiaei]
99. "Adaptive Multi-user Detector for Asynchronous DS-CDMA in Rayleigh Fading," Transactions on Circuits and Systems II: Analog and Digital Signal Processing, June 1997. [Dutta, A.K.; Kiaei, S.]
100. "Δ-Σ Frequency-to-Time Conversion by Triangularly Weighted ZC Counter," International Symposium on Low Power Electronics and Design, Aug. 1997. [Hovin, M.; Kiaei, S.; Lande, T.S.]
101. "Introduction to the Special Issue on Low Power Wireless Communications," IEEE Transactions on Circuits and Systems II: Analog and Digital Signal Processing, June, 1997. [Kiaei, S.; Friedman, E.G.]
102. "Low Power Frequency-to-Time Conversion for Cellular Systems Using Predictive Zero-Crossing," 1997 IEEE 47th Vehicular Technology Conference, May 1997. [Dutta, A.K.; Kiaei, S.; Talwalkar, S.A.]
103. "Triangularly Weighted Zero-Crossing Detector Providing ΣΔ Frequency-to-Digital Conversion," Electronics Letters, Volume: 33, Issue: 13, June 1997. [Hovin, M.E.; Lande, T.S.; Wisland, D.T.; Kiaei, S.]
104. Pages:1121 - 1122
105. "Low-Power Delta-Sigma Time-to-Digital Conversion," *Proc. 1997 International Symposium on Low Power Electronics and Design*, pp. 52-56, Monterey, CA, 1997. [M. Hovin, S. Kiaei, T.S. Laude]

106. "Modified Adaptive Multi-user Detector for DS-CDMA with Fading," 47th Vehicular Technology Conference, VTC 97, Phoenix, AZ, May 97. [A. Dutta, S. Kiaei]

107. "Predictive Zero-Crossing Frequency Discrimination for Cellular Systems, Part I and II." 47th Vehicular Technology Conference, VTC 97, Phoenix, AZ, May 97. [A. Dutta, S. Kiaei]

108. "CDMA Multi-user Cancellation," ", Int. Conf. On Acoustics, Speech and Signal Processing, Munich, Germany, April 97. [A. Dutta, S. Kiaei]

109. "Digitally Correcting Schemes for Oversampled A/D," Int. Symp. On Circuits and systems, London, UK, 1994. [S. Abdenadher, S. Kiaei, G. Temes, R. Schreier]*

110. "Multi-Rate Transformation of Recurrence Equations," Int. Conf. on ASAP, Venice, Italy, Oct. 1993. [Li Aihua, Y. Zheng, S. Kiaei]

111. "Adaptive Digital Correction for Dual Quantization /spl Sigma/-/spl Delta/ Modulators," IEEE International Symposium on Circuits and Systems, May 1993. [Kiaei, S.; Abdennadher, S.; Temes, G.C.; Yang, Y.]

112. "Analog Logic Techniques Steer Around the Noise," IEEE Circuits and Devices Magazine, Volume: 9, Issue: 5, Sept. 1993; Pages:18 – 21 [Allstot, D.J.; Kiaei, S.; Zele, R.H.]

113. "Folded Source-Coupled Logic vs. CMOS Static Logic for Low-Noise Mixed-Signal ICs," IEEE Transactions on Circuits and Systems I: Fundamental Theory and Applications, Sept. 1993. [Allstot, D.J.; San-Hwa Chee; Kiaei, S.; Shrivastawa, M.]

114. "Multi-Rate Transformation of Directional Affine Recurrence Equations," International Conference on Application-Specific Array Processors, Oct. 1993. [Zheng, Y.; Kiaei, S.]

115. "Adaptive self-correcting Σ–Δ modulators," International Conference on microelectronics, Tunisia, 1992. [S. Abdenadher, S. Kiaei, G. Temes]*

116. "Adaptive Self-Calibrating Delta-Sigma Modulators," Electronics Letters, Volume: 28, Issue: 14, 2 July 1992; Pages: 1288 – 1289. [Abdennadher, S.; Kiaei, S.; Temes, G.; Schreier, R.]

117. "Enhancement Source-Coupled Logic for Mixed-Mode VLSI Circuits," IEEE Transactions on Circuits and Systems II: Analog and Digital Signal Processing, Volume: 39, Issue: 6, June 1992; Pages: 399 – 402. [Maleki, M.; Kiaei, S.]

118. "On-line Adaptive Digital Correction of Dual-Quantization Delta-Sigma Modulators," Electronics Letters, Volume: 28, Issue: 16, 30 July 1992; Pages: 1511 – 1513 [Yaohua Yang; Schreier, R.; Temes, G.C.; Kiaei, S.]

119. "Piecewise Linear Schedules For Recurrence Equations," Workshop on VLSI Signal Processing, Oct. 1992. [Rajopadhye, S.; Mui, L.; Kiaei, S.]

120. "Synthesis Techniques for CMOS Folded Source-Coupled Logic Circuits," IEEE Journal of Solid-State Circuits, Aug. 1992. [Maskai, S.R.; Kiaei, S.; Allstot, D.J.]

121. "A Folding Transformation for VLSI IIR Filter Array Design," Proc. of International Conference on Acoustics, Speech, and Signal Processing, Toronto, Canada, pp. 1237-1240, May 1991. [S. Rajopadhye, S. Kiaei]

122. "Systematic Derivation of Multi-Rate VLSI Arrays for the Solution of Toeplitz Matrices," IEEE Great Lakes Symposium on VLSI, March 1991. Proc. of IEEE Pacific Rim Conference on

Communications, Computers, and Signal Processing, Victoria, BC, Canada, pp. 623-626, May 1991. [S. Kiaei]

123. "CMOS Source-Couple Logic for Mixed-Mode VLSI," Proc. of International Symposium on Circuits and Systems, New Orleans, Louisiana, pp. 1608-1611, May 1990. [S. Kiaei, S.H. Chee, D. Allstot]

124. "VLSI Design of Multi-Rate Arrays," Proc. of International Conference on Acoustics, Speech, and Signal Processing, New Mexico, pp. 1049-1052, 1990. [L. Aihua, S. Kiaei]

125. "Comparison of Low-Noise Current-Mode Logic Circuits for High Performance Mixed-Mode Applications," Proc. of International Symposium on Circuits and Systems, New Orleans, Louisiana, May 1990. [S. H .Chee, S. Chow, S.S. Lee, S. Kiaei, D. Allstot]

126. "VLSI Design of Dynamically Reconfigurable Array Processors-DRAP,"" Proc. of International Conference on Acoustics, Speech, and Signal Processing, Glasgow, Scotland, 1989. [S. Kiaei, J. Durgham]

127. "VLSI Design of Bit/Serial Adaptive IIR Filters," Proc. of IEEE Pacific Conference on Communications, Computers, and Signal Processing, Victoria, Canada, pp. 650-652, June 1989. [R. Badyal, S. Kiaei]

128. "CCA Approach for ARMA Spectral Analysis," Proc. of IEEE International Symposium on Circuits and Systems, Portland, OR, pp. 1319-1322, May 1989. [S. Kiaei, L. Luo]

129. "Canonical Correlation Analysis (CCA) for ARMA Spectral Estimation," IEEE International Symposium on Circuits and Systems, May, 1989. [Kiaei, S.; Luo, L.]

130. "VLSI Implementation of Adaptive Bit/Serial IIR Filters," IEEE Pacific Rim Conference on Communications, Computers and Signal Processing, June 1989. [Badyal, R.; Kiaei, S.]

131. "VLSI design of WAP for Recursive Equations," VLSI Signal Processing, 1988. [S. Kiaei, U. Desai]

132. "Independent Data Flow Wavefront Array Processors for Recursive Equations," Proc. of 20th Annual Conference on Information Sciences and Systems, Princeton University, NJ, 1986. [S. Kiaei, U. Desai]

133. "A Stochastic Realization Approach to Reduced-Order Hierarchical Estimation," Proc. of 24th IEEE Conference on Dec., Ft. Lauderdale, FL, pp. 416-421, December 1985. [U. Desai, S. Kiaei]

134. "Hierarchical Estimation Algorithms," Proc. of IEEE Conference on Man, Cybernetics, and Systems, Tucson, AZ, October 1985. [U. Desai S. Kiaei]

135. "Approximation of Markovian Models with Non-Constant Parameters," Proc. of 23rd IEEE Conference on Dec., Las Vegas, NV, pp. 1642-1644, December 1984. [U. Desai, S. Banerjee, S. Kiaei]

136. "A Canonical Correlation Approach to Reduced-Order LQR Design," Proc. of 23rd IEEE Conference on Dec., Las Vegas, NV, pp. 1523-1528, December 1984. [U. Desai, S. Banerjee, S. Kiaei]

Dr. Sayfe Kiaei
School of Electrical, Computer and Energy Engineering
Arizona State University, Tempe, AZ 85287
Sayfe@asu.edu

- **GRADUATE STUDENT ADVISEES & RESEARCH PROJECT**

- ***(Partial list of Students graduated, current employment to the best of my knowledge)***

1. J. Durgam, VLSI Design of Dynamically Reconfigurable Array Processors, MSEE, 1988. Intel.
2. J. Gilbert, Minimization Techniques for PLAs, MSEE, 1988, Tektronix Inc.
3. L. Luo, CCA Methods for ARMA Spectral Estimation, MSEE, 1989. Berkeley Research Center
4. E. Zahl, Enhancement Methods for A/D Noise Reduction, MSEE, 1989. AT&T
5. L. Aihua, Synthesis of MRAs, MSEE, 1990. Intel.
6. F. Aslam, Image Restoration Methods, MSEE, 1990.
7. S.H. Chee, FSCL Circuits for Mixed-Mode IC's, MSEE, 1990. Linear Tech.
8. C. Dawson, MSEE, 1990. Boeing
9. A. Chow, Source-Coupled Logic ALU, MSEE, 1990. Intel
10. S. Maskai, Decimation Filters Using FSCL Circuits, MSEE, 1991. Intel
11. L. Louis, VLSI Implementation of Toeplitz Matrices, MSEE, 1991.
12. R. Badyal, Bit/Serial VLSI Design of IIR Filters, MSEE, 1992, HP
13. Lap Mui, Piece-Wise Linear Schedule for VLSI Arrays, MSEE, 1992. HP
14. S. Abdennadher, Adaptive Sigma-Delta Modulators, MSEE, 1992. Level One / Intel.
15. H. Bribech, Second Order Adaptive A/D Schemes, MSEE, 1992.
16. B. Hickman, MSEE, 92. Tektronix
17. M. Maleki, Current-Mode Flash A/D, MSEE, 1992. University of Oregon
18. Man Wong, Low-Noise Decimation Filter for Mixed-Mode ICs, MSEE, 1993, Motorola.
19. Anu Krishna Swamy, Low Noise IC Blocks for Mixed-mode IC's, MSEE, 1993, Ph.D., 1997.
20. Manu Srivastava, Comparison of Differential Logic (FSCL, CVSL, DSLL), MSEE, 1994, Intel.
21. Joel Oren, VLSI Design of Asynchronous FIR Filters, MSEE thesis, Feb. 1994. E-Systems.
22. Y. Zheng, VLSI Design and Synthesis of Multi-Rate Arrays, Ph.D. March 94, Hughes Research.
23. Satish Kulkarni, Low-Sensitivity Filters, MSEE, 1995, Motorola.
24. Amit Dutta, Multi-user Interference Cancellation, Ph.D, Dec. 97, Faculty, India.
25. Dwight Poplin, Multiplierless MPEG Decoder, MSEE, 1996. HP.
26. Maxim Scarpa, Adaptive I/Q Miss-match Correction for Direct Conversion Receivers, MSEE 1998.
27. Jeff McNeal, Sigma-Delta Frequency-to-Time Conversion, MSEE, 1998. Level One Comm.
28. Julia Vogel, Adaptive DC offset Cancellation, MSEE, 1998. Faculty in Germany.
29. Takao Inoue, MS, Echo Cancellation for ADSL, 1998. MSEE, The U of Texas at Austin.
30. Navid Lashkarian, Frequency off-set estimation and Synchronization of OFDM systems, Ph.D., June 1999. Broadcom Inc. & Faculty at UC San Jose.

31. Guner Arslan, (co-advisor with B. Evans), "Fast Equalization for DMT systems, with applications to ADSL," Ph.D. The University of Texas at Austin, 2000
32. Salem Abdennadher, I/Q Mismatch Correction for RF Wireless transceivers, Ph.D., Level One Comm/Intel.
33. Can Sandalci, DSL Line Driver, Ph.D., 2001, Intel.
34. Dean Badillo, Low-Cost VCO Ring Oscillators, PhD, 2004, Intel, Chandler,
35. Siamak Abedinpour, PhD, 2005 Freescale, Tempe, Arizona
36. Hemanth Shivalingaiah, Multi-Band Low Noise Amplifiers, Ph.D., 2006, Intel,
37. Shahin Farahani, PhD, 2006, Qualcomm Inc,
38. Nazanin Darbanian, M.S. Freescale, Tempe, Arizona
39. *Joe Rutkowski, Joseph, MS, 2004, Phillips.*
40. *Chaudhuri, Bikram, Synthesizer, MS/PhD, MS 2004.*
41. *Zhang, Jiandong, MEMs, MEMS, December-04*
42. *Afsahi, Ali, MS/PHD, UC San Diego, QUALCOMM, Connection One*
43. *Chen, Xiaomin, UWB, PHD, 2007, SRC/Motorola*
44. *Jali, Hilda, Power Management, MS, June-05,*
45. *Xuejin Wang, RF Optimization, 2006 CAD tools, PhD, Neo-Linear*
46. *Umar Lyles, Power Amplifier, MS, 2006. Texas Instruments*
47. MS, Erika Munoz, RADHARD, 2007, Intel
48. Waleed Khali, (Co-Advisor), Professor at Ohio State
49. Jennifer Kitchen, PhD, 2009, Professor at ASU
50. Shahin Mehdizad Taleie, RFDAC, PhD, 2009, Qualcomm
51. Ilker Deligoz, PHD, 2009, Qualcomm
52. Hyung Kim, PhD, Jan 2010, Intel
53. Jung Le, PhD 2010, Intel, TI
54. Syed Naqvi, PhD, 2012, Intel.
55. Todd Martin, MS, 2011, TI
56. Seungkee Min, PhD, 2011, Intel
57. Ali Meamar, Post Doc, RFIC 2013
58. Hitesh Khunti, MS 2013, Qualcom
59. Debashis Mandal, Post Doc, Research faculty 2015-2018
60. Edgar Martinez, PhD, 2015, Qualcomm
61. Chirag Desai, MS, 2016, Qualcom
62. Sanjay Avasarala, MS, 2016

63. Li Ming, MS, 2017
64. Qirong Peng, MS, 2017,
65. Yu Geng, PhD, 2018
66. Amir Ayati, PhD Aug 2018; Qualcomm
67. Pasisa Mahmoudi, PhD, May 2019, Qualcomm
68. Chai Yong, MS: 2015, PHD: 2019, Qualcomm
69. Shrikant Singh, MS: 2016, PhD, 2019, Movandi
70. Amir Alizadeh, Research Faculty 2019-Present
71. Ata S. PhD, 2021, Ata Sarrafinejad, PhD, 2021

UNIVERSITY COMMITTEES

- Various Committees at ASU, Oregon State University, etc.

INDUSTRY COMMITTEES

- Arizona Telecommunications and Information Council (ATIC), Board Member
- CAS Fellows Committee (ends December 31, 2006)
- *IEEE CAS Phoenix Chapter Organizers (the committee is in the process of determining new chair – current chair not active)*
- *Executive Committee, RFIC 2006.*
- *Technical Program Comm, IEEE RFIC 2006.*
- *Executive Committee, Conferences, International Solid Sate System's Conference.*
- *IEEE CAS Society, VLSI Technical Comm. Member*
- *Editorial Board, IEEE Communications Surveys & Tutorials*
- *Radio Frequency Integrated Circuits- RFIC 2006*
- *IEEE RF Integrated Circuits Conference, Committee Chair for two workshops*
- *International Microwave Symposium, IMS-MTT 2006*
- *Int. Symposium on Circuits and Systems - ISCAS 2006*
- *Wireless Networks & Emerging Technologies, WNET06*
- *Midwest Symposium on Circuits and System*
- *Arizona Governor IT Advisory Committee – GITA*
- *Arizona Telecom – ATIC*

INSTRUCTIONAL SUMMARY

- Digital IC Design, Analog IC Design, Advance CMOS Analog IC, VLSI, RFIC Design
- Wireless Transceiver Design, Wireless Communications, GPS, Telecomm Systems, Digital Communication

Dr. Sayfe Kiaei
School of Electrical, Computer and Energy Engineering
Arizona State University, Tempe, AZ 85287
Sayfe@asu.edu

- Signal Processing, Advance digital signal processing, Communication, Digital Communication, Digital Audio Processing, Adaptive array processing
- Computer Architecture, Microprocessor System Architecture, Pipeline Array Processing