US006724403B1

(12) **United States Patent**
Santoro et al.

(10) **Patent No.: US 6,724,403 B1**
(45) **Date of Patent: Apr. 20, 2004**

(54) **SYSTEM AND METHOD FOR SIMULTANEOUS DISPLAY OF MULTIPLE INFORMATION SOURCES**

(75) Inventors: **Ovid Santoro**, London (GB); **Klaus Lagermann**, Copenhagen (DK)

(73) Assignee: **Surfcast, Inc.**, Palo Alto, CA (US)

(*) Notice: Subject to any disclaimer, the term of this patent is extended or adjusted under 35 U.S.C. 154(b) by 259 days.

(21) Appl. No.: **09/702,325**

(22) Filed: **Oct. 30, 2000**

Related U.S. Application Data

(60) Provisional application No. 60/162,522, filed on Oct. 29, 1999.

(51) **Int. Cl.**[7] **G06F 15/00**
(52) **U.S. Cl.** **345/765**; 345/790
(58) **Field of Search** 345/765, 766, 345/764, 729, 781, 788, 716, 717, 792, 790

(56) **References Cited**

U.S. PATENT DOCUMENTS

4,555,775 A		11/1985	Pike	
4,653,020 A		3/1987	Cheselka et al.	
4,712,191 A		12/1987	Penna	
4,831,556 A	*	5/1989	Oono	345/786
5,157,384 A		10/1992	Greanias et al.	
5,394,521 A		2/1995	Henderson, Jr. et al.	
5,479,602 A		12/1995	Baecker et al.	
5,550,968 A	*	8/1996	Miller et al.	345/741
5,740,430 A		4/1998	Rosenberg et al.	
5,740,549 A		4/1998	Reilly et al.	
5,757,371 A	*	5/1998	Oran et al.	345/779
5,778,181 A		7/1998	Hidary et al.	
5,793,368 A		8/1998	Beer	
5,796,383 A		8/1998	Henshaw et al.	
5,796,401 A		8/1998	Winer	345/433
5,812,123 A	*	9/1998	Rowe et al.	725/43
5,813,007 A		9/1998	Nielsen	
5,831,664 A	*	11/1998	Wharton et al.	725/81
5,838,326 A	*	11/1998	Card et al.	345/775
5,841,418 A		11/1998	Bril et al.	345/3
5,848,352 A		12/1998	Dougherty et al.	
5,905,492 A		5/1999	Straub et al.	
5,918,237 A		6/1999	Montalbano	
5,929,854 A	*	7/1999	Ross	345/783
6,003,041 A		12/1999	Wugofski	
6,011,537 A		1/2000	Slotznick	
6,025,837 A		2/2000	Matthews, III et al.	
6,028,602 A		2/2000	Weidenfeller et al.	
6,160,553 A	*	12/2000	Robertson et al.	345/767
6,166,738 A	*	12/2000	Robertson et al.	345/839
6,188,405 B1	*	2/2001	Czerwinski et al.	345/764
6,411,275 B1	*	6/2002	Hedberg	345/156

OTHER PUBLICATIONS

Martin S Matthews and Erik B. Poulsen, FrontPage 2000: The Complete Reference, May 1, 1999, McGraw–Hil Osborne Media, Chpater 19, pp. 1–12.*

John Ross, ABCs of Internet Explore 4, Copyright 1997, Sybex, Chapter 13, pp. 1–3.*

Paul McFedries, The Complete Idiot's Guide to Window 95, Mar. 1997, 2nd Edition, pp. 3–7, 97, 101, 105–107, 379.*

(List continued on next page.)

Primary Examiner—Cao (Kevin) Nguyen
(74) *Attorney, Agent, or Firm*—Pennie & Edmonds LLP

(57) **ABSTRACT**

A computerized method of presenting information from a variety of sources on a display device. Specifically the present invention describes a graphical user interface for organizing the simultaneous display of information from a multitude of information sources. In particular, the present invention comprises a graphical user interface which organizes content from a variety of information sources into a grid of tiles, each of which can refresh its content independently of the others. The grid functionality manages the refresh rates of the multiple information sources. The present invention is intended to operate in a platform independent manner.

52 Claims, 27 Drawing Sheets

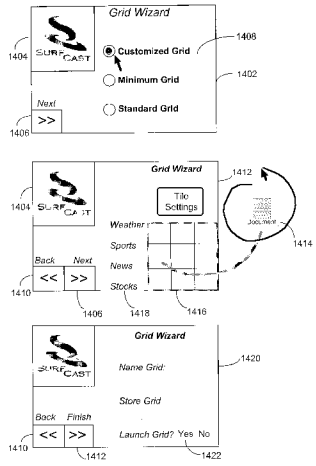

OTHER PUBLICATIONS

PCT International Search Report, Application No. PCT/US00/29850, dated Jun. 25, 2001, 3 sheets.
Available Web Site: www.dodots.com Accessed on: May 9, 2001.
Available Web Site: www.snippets.com Accessed on: May 9, 2001.
Available Web Site: www.ububu.com Accessed on: May 9, 2001.
Available Web Site: www.chatb.com Accessed on: Nov 7, 2000.
Duplex Multiplexer ,Sensormatic, Samsung, . . . ireless communications,hand helds,maxon Available Web Site: www.mindspring.com/~stancom/multi.html Accessed on: Nov. 7, 2000.
push technology. Available Web Site: www.whatis.com/WhatIs_Definition_Page/0,4152,213345,00.html Last Update: Jul. 7, 2000 Accessed on Nov. 7, 2000.

Clyman, John. Web Integration/Internet Explorer 4.0 Available Web Site: www.zdnet.com/pcmag/features/memphis/memphis1.htm Accessed on Nov. 7, 2000.

Oct. 2000, Product Spotlight: Non–browser based portal solution from Snippets Software, Inc., *Corporate Portals Letter* [Online] 1(10), 1–3. Available Web Site: www.snippets.com/download/Corporate_Portal_Article.pdf Accessed on May 9, 2001.

* cited by examiner

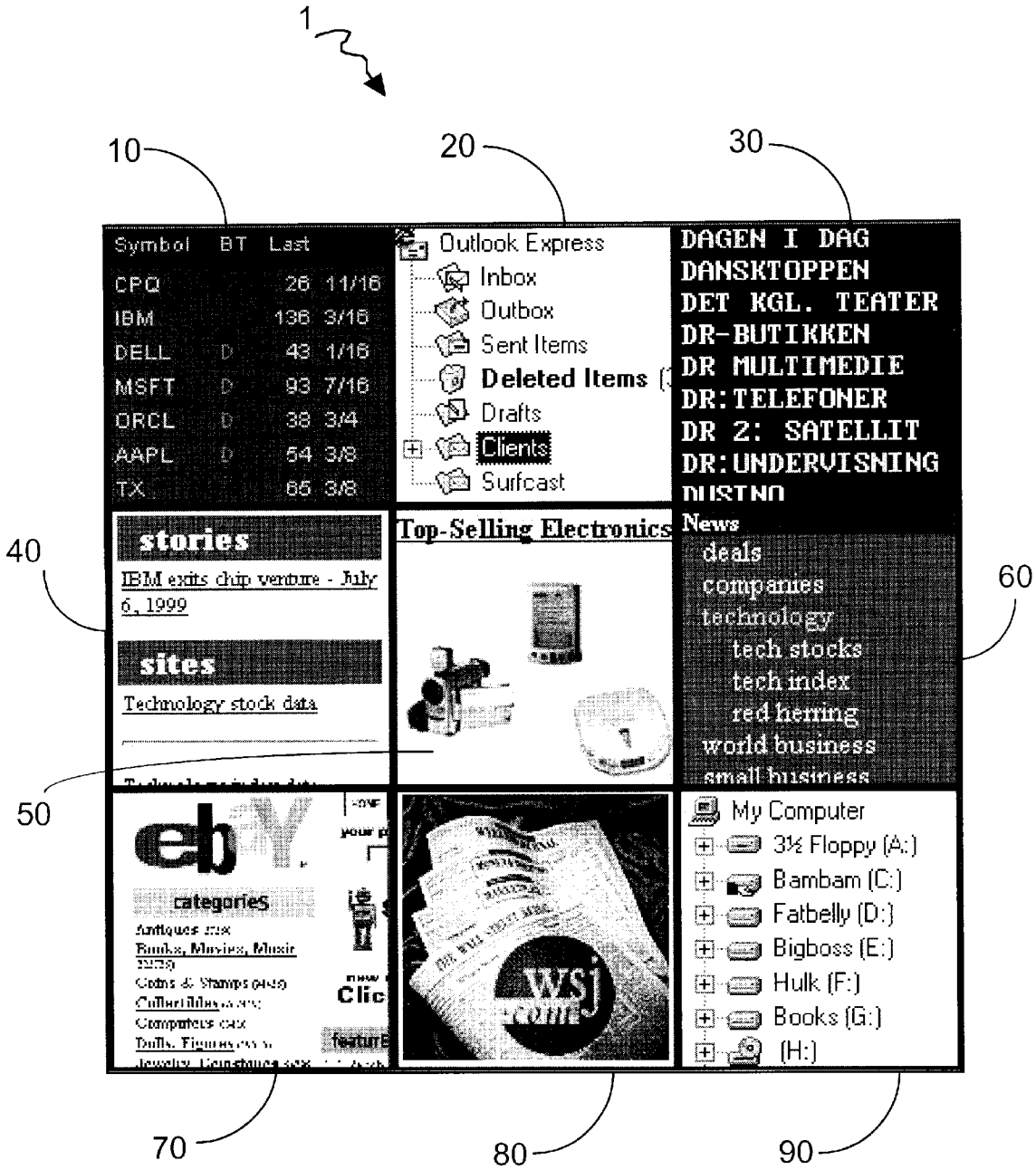
1
10
20
30
40
50
60
70
80
90
Symbol BT Last
CPQ 26 11/16
IBM 136 3/16
DELL D 43 1/16
MSFT D 93 7/16
ORCL D 38 3/4
AAPL D 54 3/8
TX 65 3/8
Outlook Express
Inbox
Outbox
Sent Items
Deleted Items
Drafts
Clients
Surfcast
DAGEN I DAG
DANSKTOPPEN
DET KGL. TEATER
DR-BUTIKKEN
DR MULTIMEDIE
DR:TELEFONER
DR 2: SATELLIT
DR:UNDERVISNING
stories
IBM exits chip venture - July 6, 1999
sites
Technology stock data
Top-Selling Electronics
News
deals
companies
technology
tech stocks
tech index
red herring
world business
small business
categories
My Computer
3½ Floppy (A:)
Bambam (C:)
Fatbelly (D:)
Bigboss (E:)
Hulk (F:)
Books (G:)
(H:)

Fig. 1

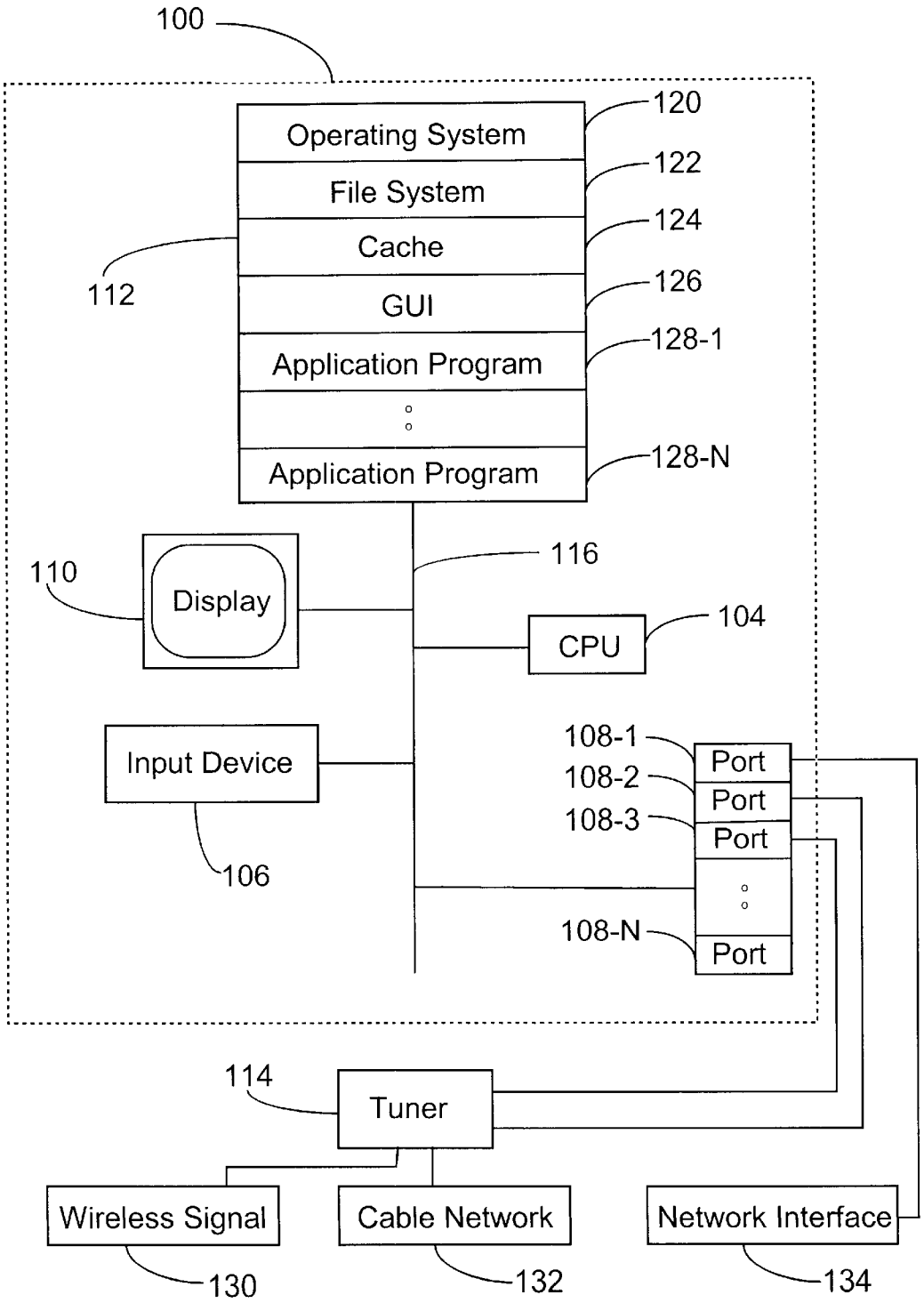
100
Operating System
File System
Cache
GUI
Application Program
Application Program
120
122
124
126
128-1
128-N
112
110
Display
116
CPU
104
Input Device
106
108-1
108-2
108-3
108-N
Port
Port
Port
Port
114
Tuner
Wireless Signal
Cable Network
Network Interface
130
132
134

Fig. 2

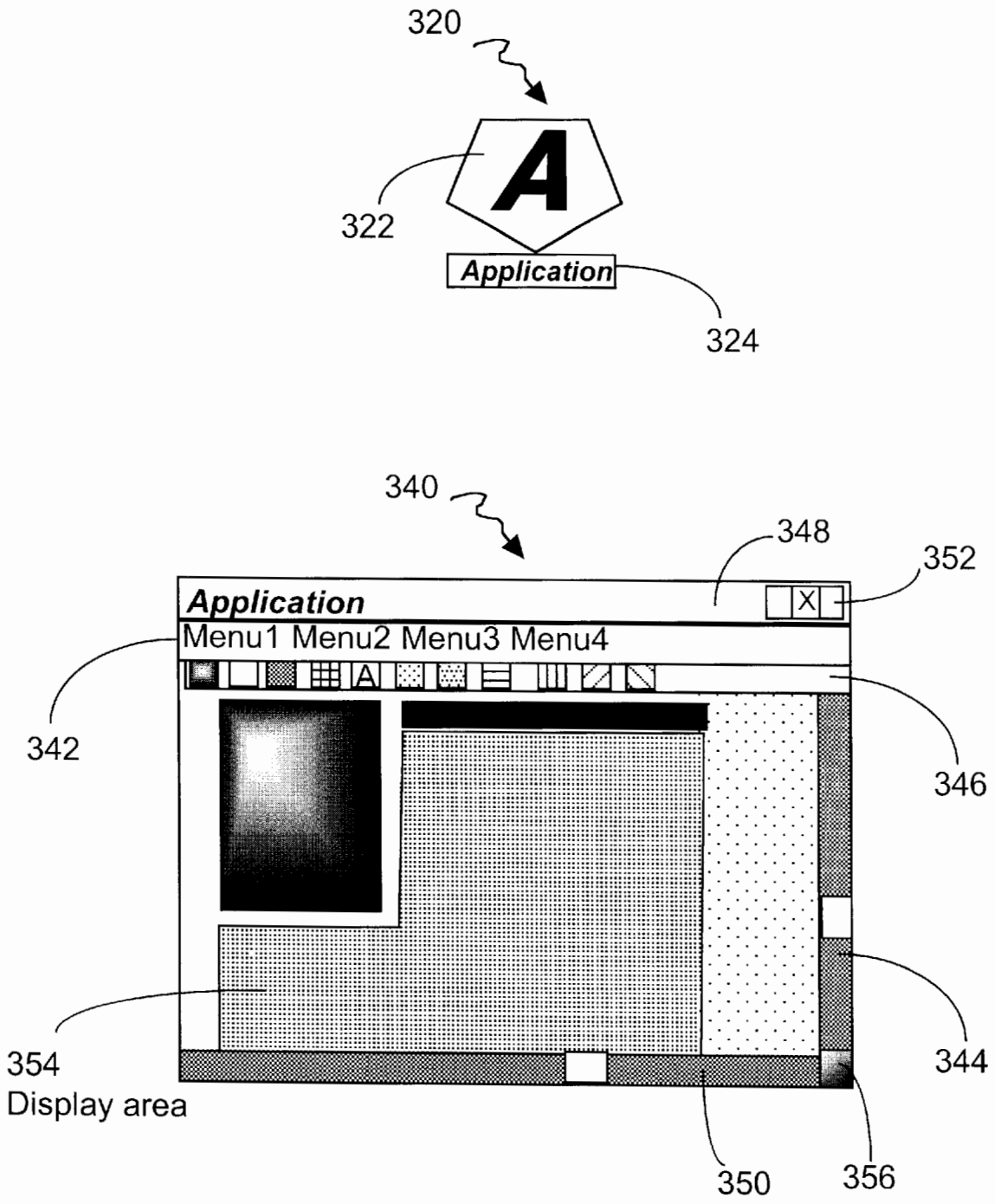

Fig.3
(Prior Art)

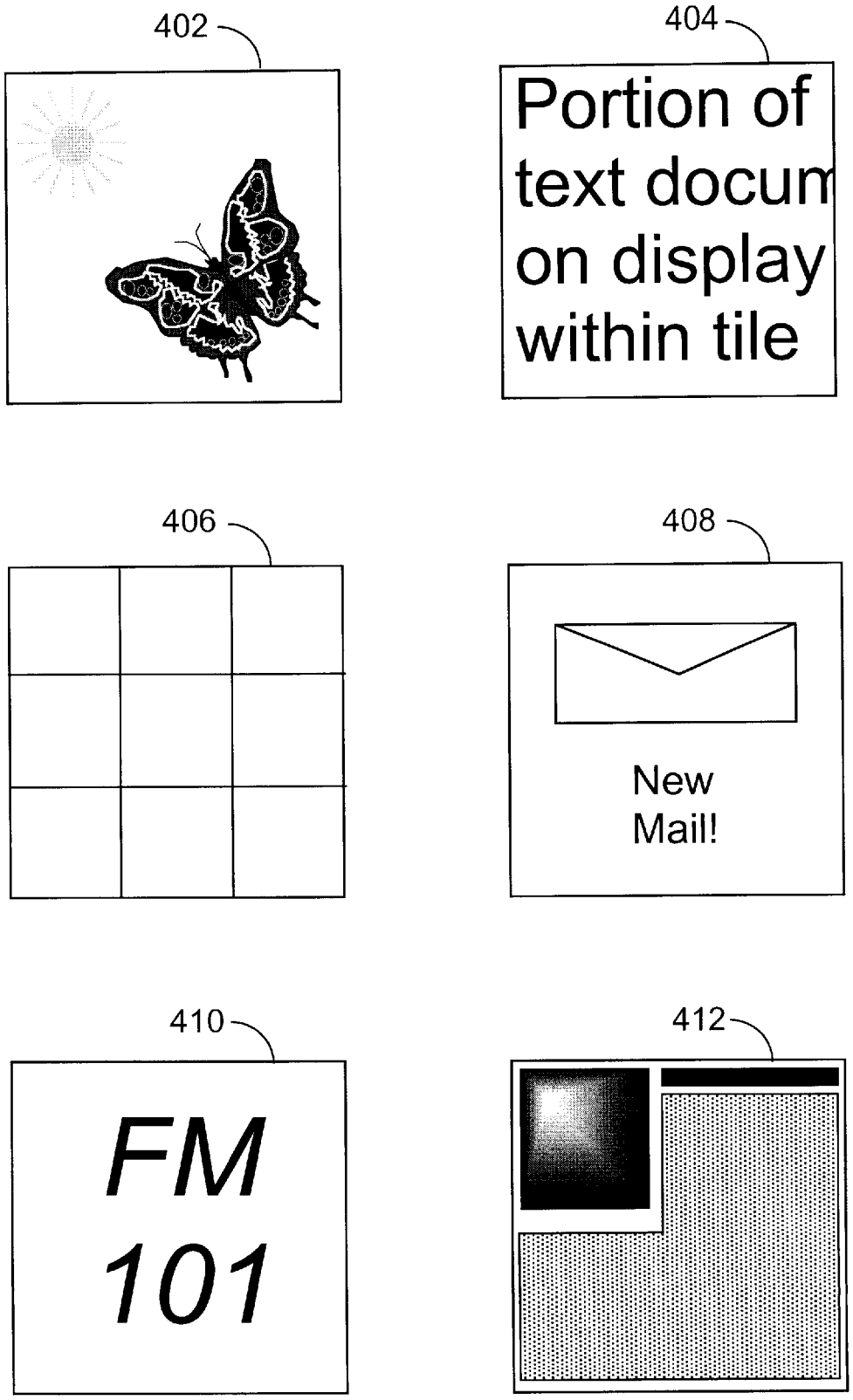
402
404
Portion of
text docum
on display
within tile
406
408
New
Mail!
410
FM
101
412

Fig. 4

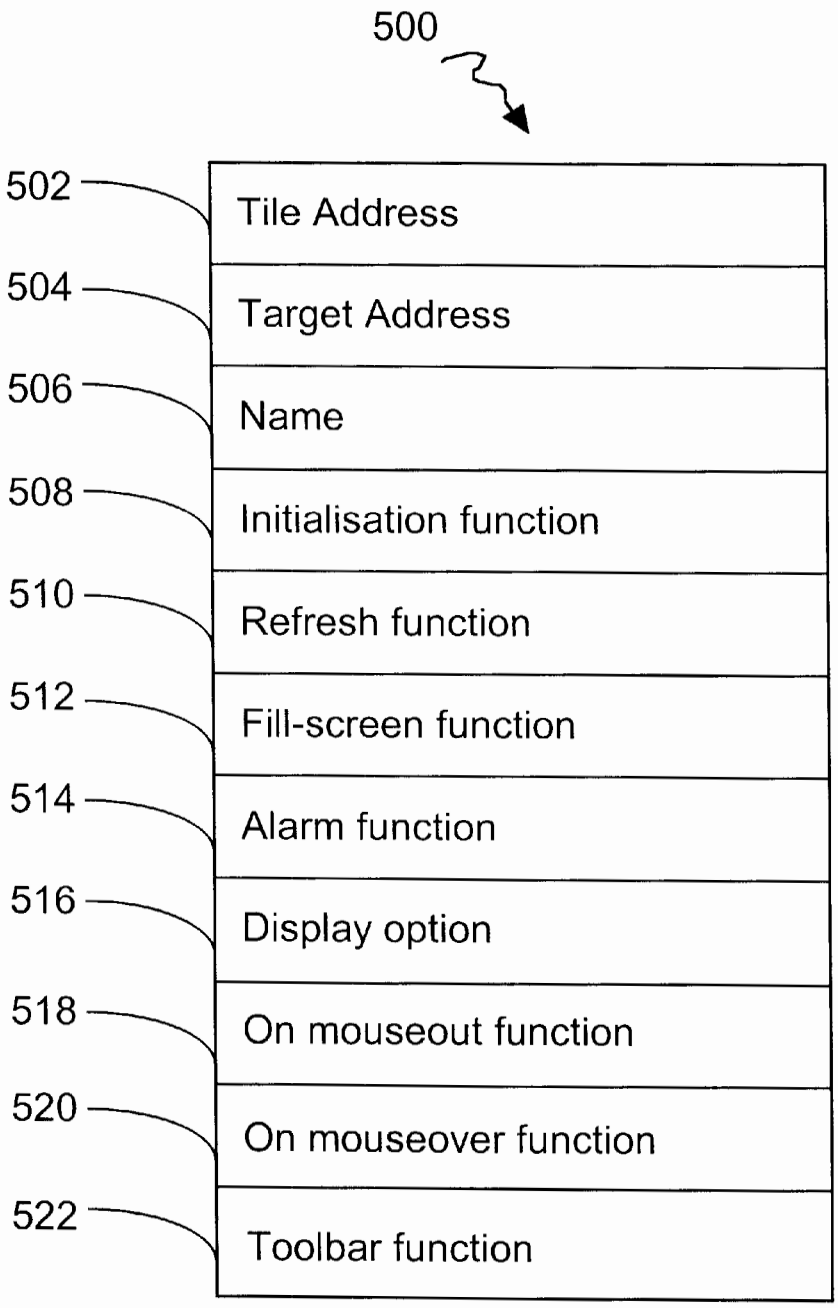
500
502
Tile Address
504
Target Address
506
Name
508
Initialisation function
510
Refresh function
512
Fill-screen function
514
Alarm function
516
Display option
518
On mouseout function
520
On mouseover function
522
Toolbar function

Fig. 5

```
<TD><A HREF="tile2_target.htm"
      TARGET="new"
      ONMOUSEOVER=action1(arg3)
      ONMOUSEOUT=action2(arg4)
      REFRESH=timeout(500)
      SOURCE=http://www.camelot.castle/swords/excalibur.til
      CLICKMAP=      { 0, 0,50,50, clickfunction1( clickargument1),
                       51, 0,50,50, clickfunction2( clickargument2),
                       0,51,50,10, clickfunction3( clickargument3) }
      TOOLBAR={"local/toolbars/radio.too" PLACEMENT="bottom" }
      ALARM="alarms/condition_rain=TRUE, condition_weekend=FALSE,
                alarmaction=blow_the_horn">

</TD>
```

Fig. 6

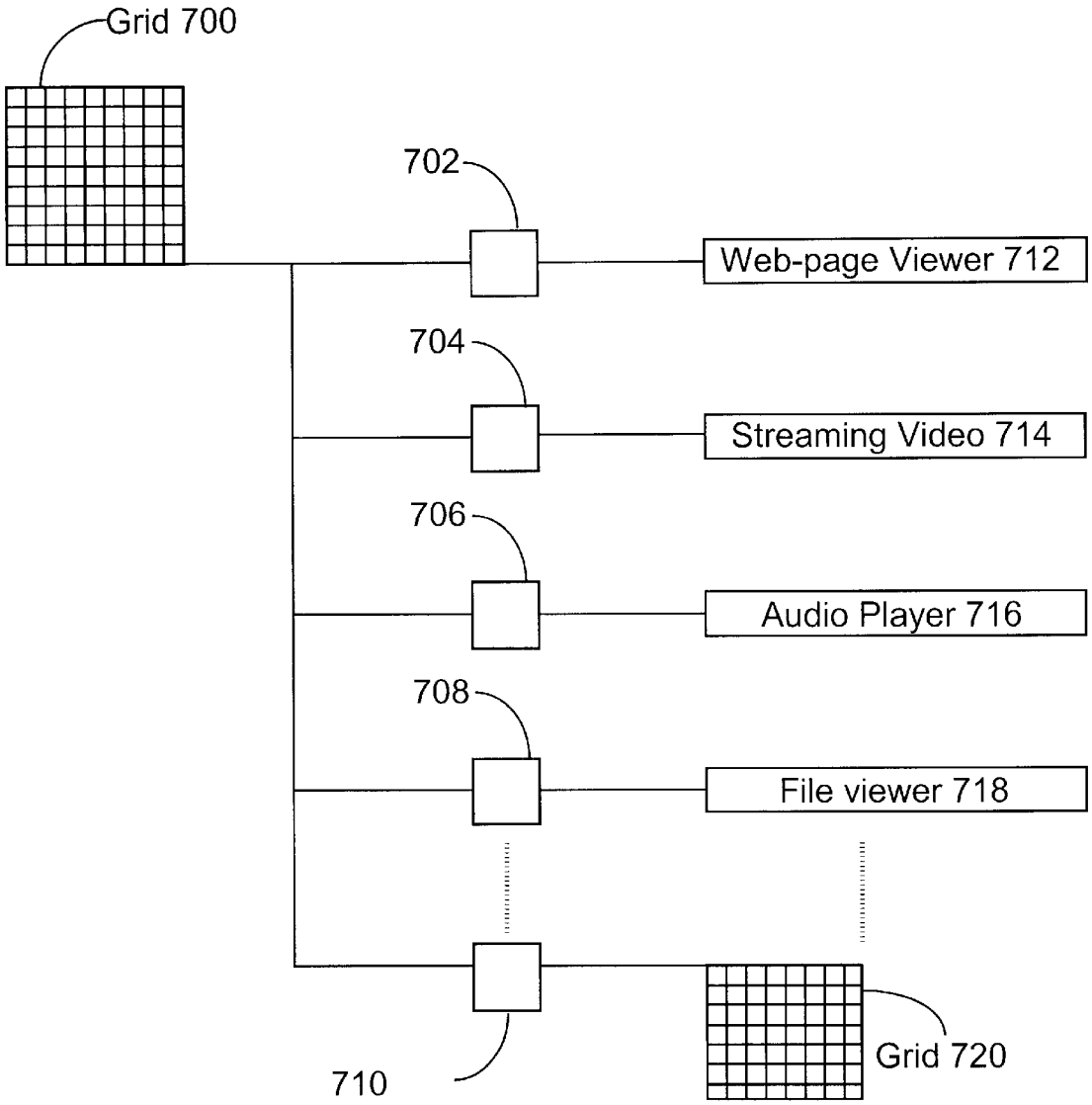
Grid 700
702
Web-page Viewer 712
704
Streaming Video 714
706
Audio Player 716
708
File viewer 718
710
Grid 720

Fig. 7

Petitioners - Exhibit 1011, page 10

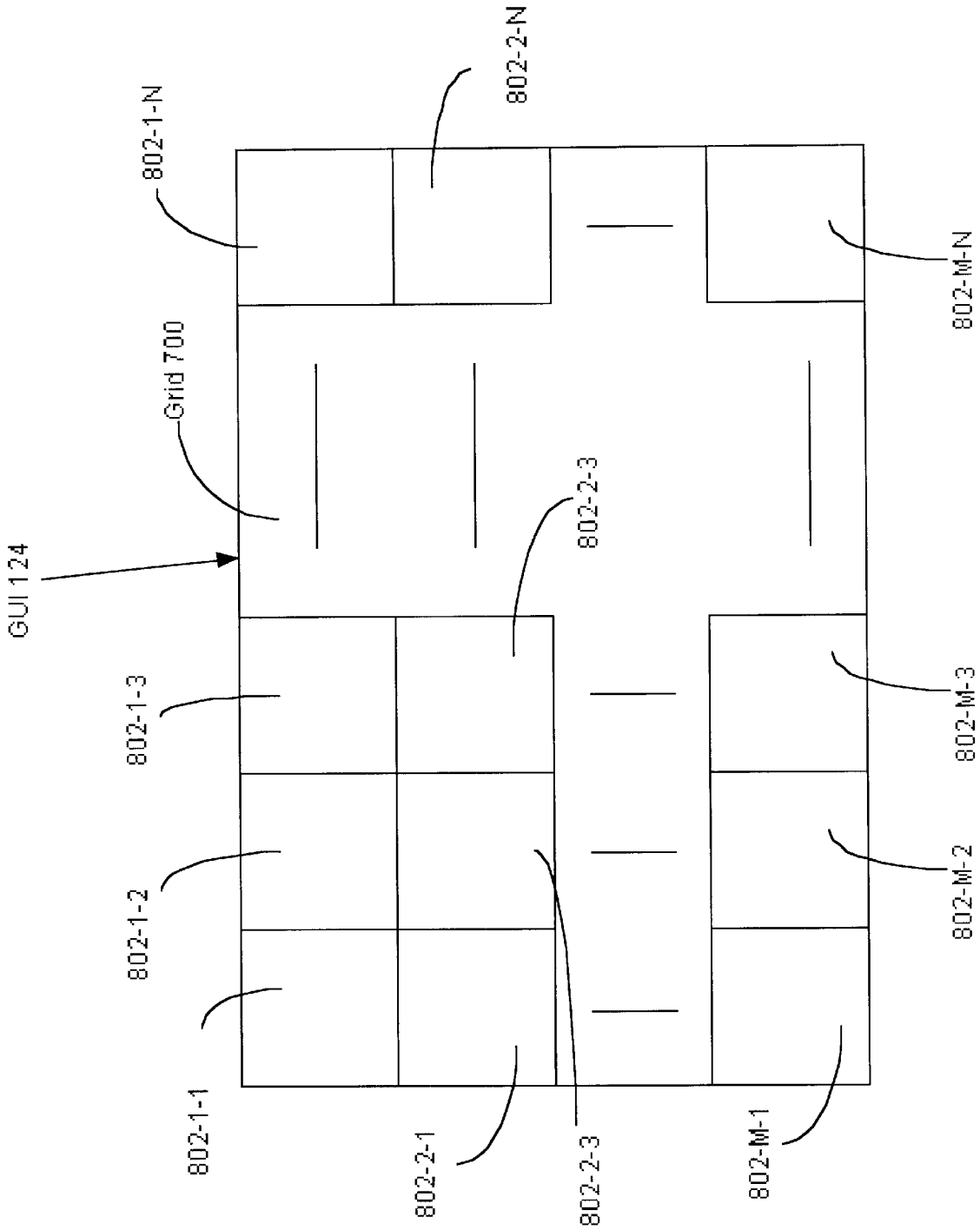

Fig. 8

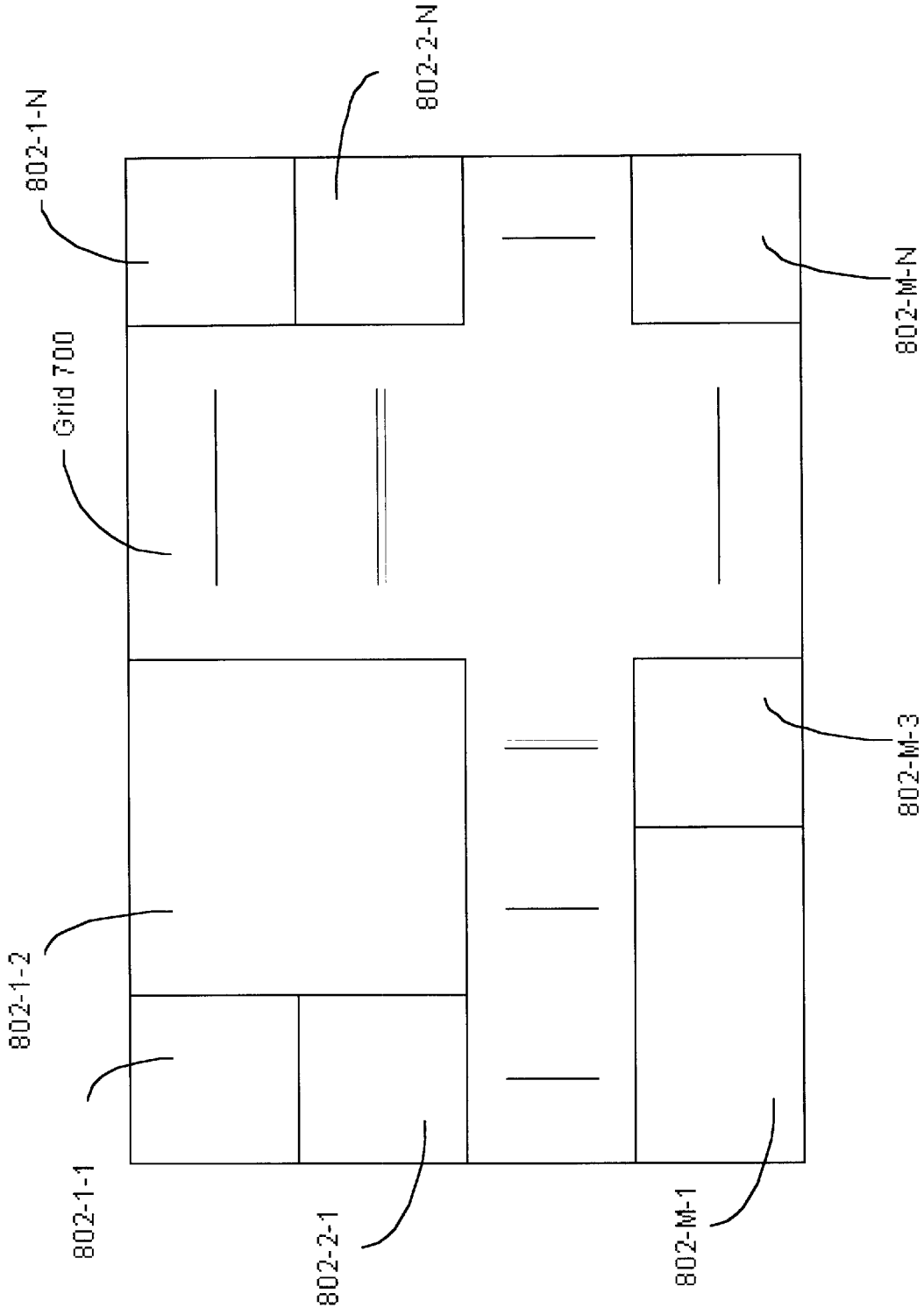

Fig. 9

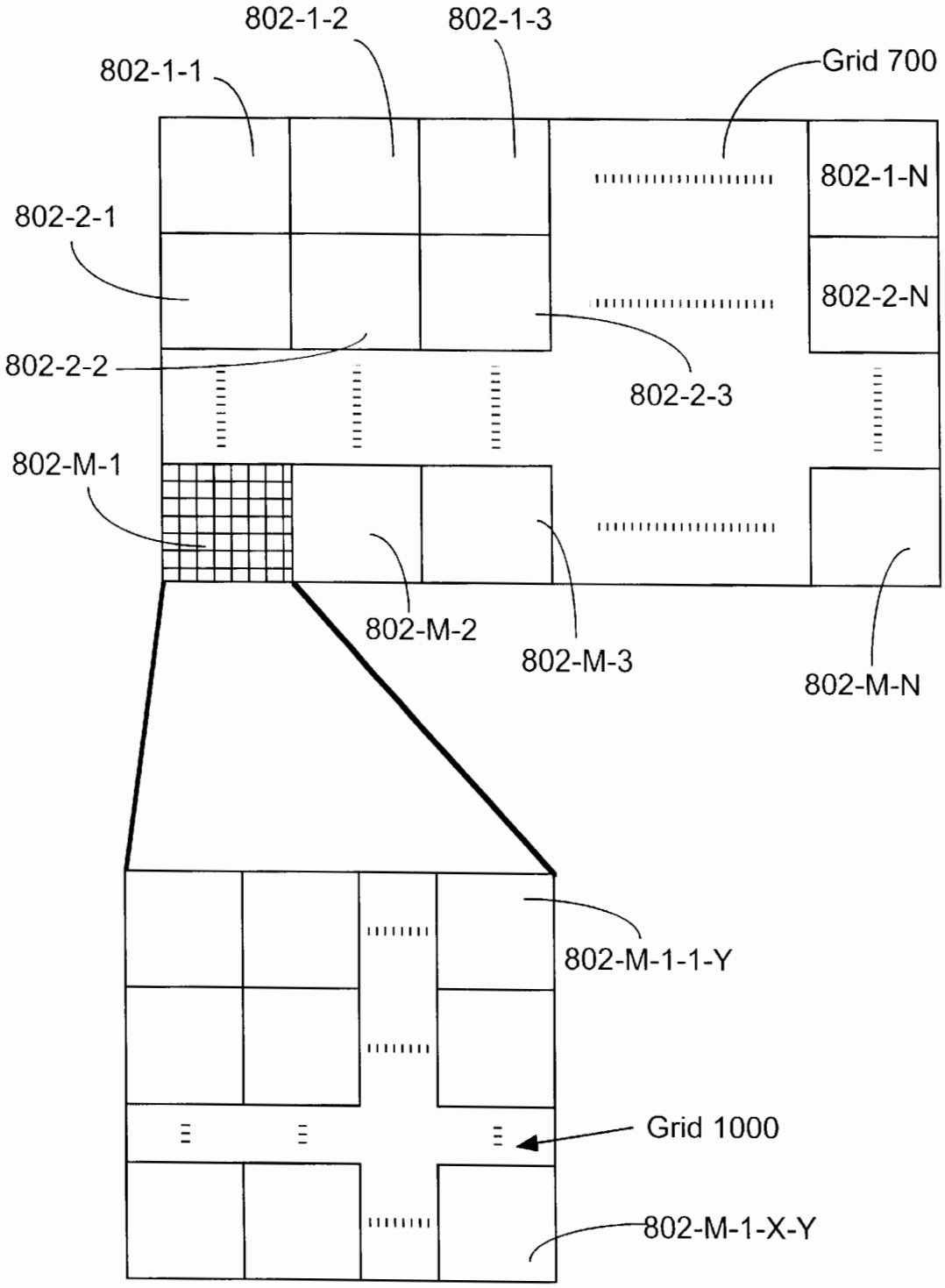
802-1-2
802-1-3
802-1-1
Grid 700
802-1-N
802-2-1
802-2-N
802-2-2
802-2-3
802-M-1
802-M-2
802-M-3
802-M-N
802-M-1-1-Y
Grid 1000
802-M-1-X-Y

Fig. 10

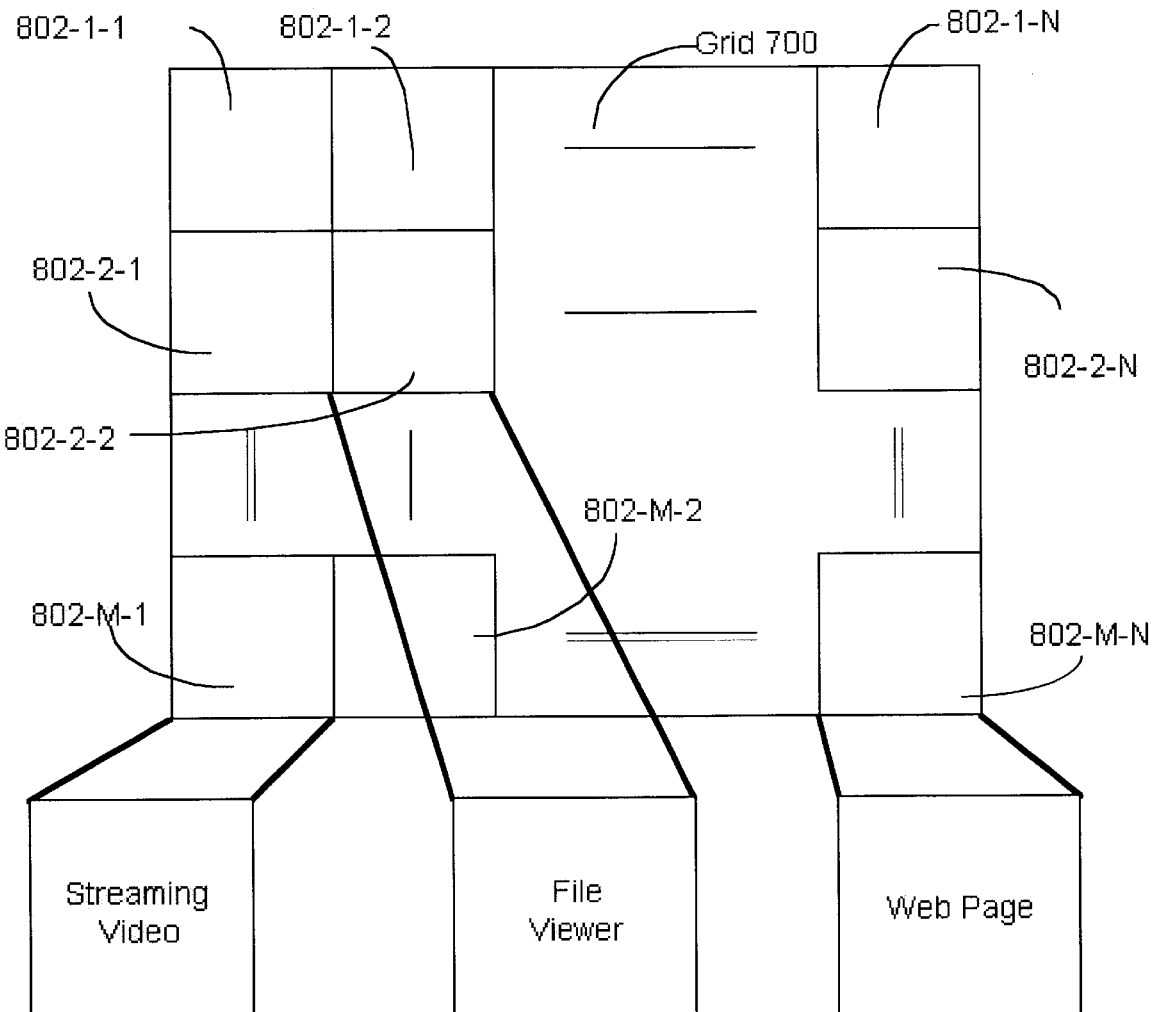
802-1-1
802-1-2
Grid 700
802-1-N
802-2-1
802-2-N
802-2-2
802-M-2
802-M-1
802-M-N
Streaming Video
File Viewer
Web Page

Fig. 11

1200

1202 Parent Grid (address)						
1204 Address of self						
1206 Configuration Wizard						
1208 Tile creation function						
1210 Tile annihilation function						
1212 Number of rows						
1214 Number of columns						
1216 Tile list	Address	Refresh rate	Position	Priority	Password	. . .
	Address	Refresh rate	Position	Priority	Password	. . .
	Address	Refresh rate	Position	Priority	Password	. . .
	Address	Refresh rate	Position	Priority	Password	. . .
	. . .	. . .	. . .	. . .	. . .	. . .

Fig. 12

```
<HTML>
<HEAD>
<TITLE>Surfcast Grid Example</TITLE>
<META NAME="Resource Manager" CONTENT="RESMGR.EXE">
<META NAME="Author" CONTENT="Surfcast, Inc.">
</HEAD>
...
<BODY BACKGROUND="surfback.gif">
<TABLE>
<TR>
<TD><A HREF="http://www.somewhere.com/sometarget.html"
       TARGET="new"
       ONMOUSEOVER=action1(arg1)
       ONMOUSEOUT=action2(arg2)
       REFRESH=timeout(200)

SOURCE="http://www.surfcast.com/tilelibrary/tile2.til">
</TD>

<TD><A
HREF="http://www.somewhereelse.com/someothertarget.html
"
       TARGET="new"
       ONMOUSEOVER=action3(arg3)
       ONMOUSEOUT=action4(arg4)
       REFRESH=timeout(500)

SOURCE="http://www.camelot.castle/swords/excalibur.til"
>
</TD>

<TD><A HREF="local/document.htm"
       TARGET="new"
       ONMOUSEOVER=action1(arg3)
       ONMOUSEOUT=action2(arg4)
       REFRESH=timeout(0)
       SOURCE="local/documents/somedocument.til">
</TD>

</TR>

</TABLE>
</BODY>
</HTML>
```

Fig. 13

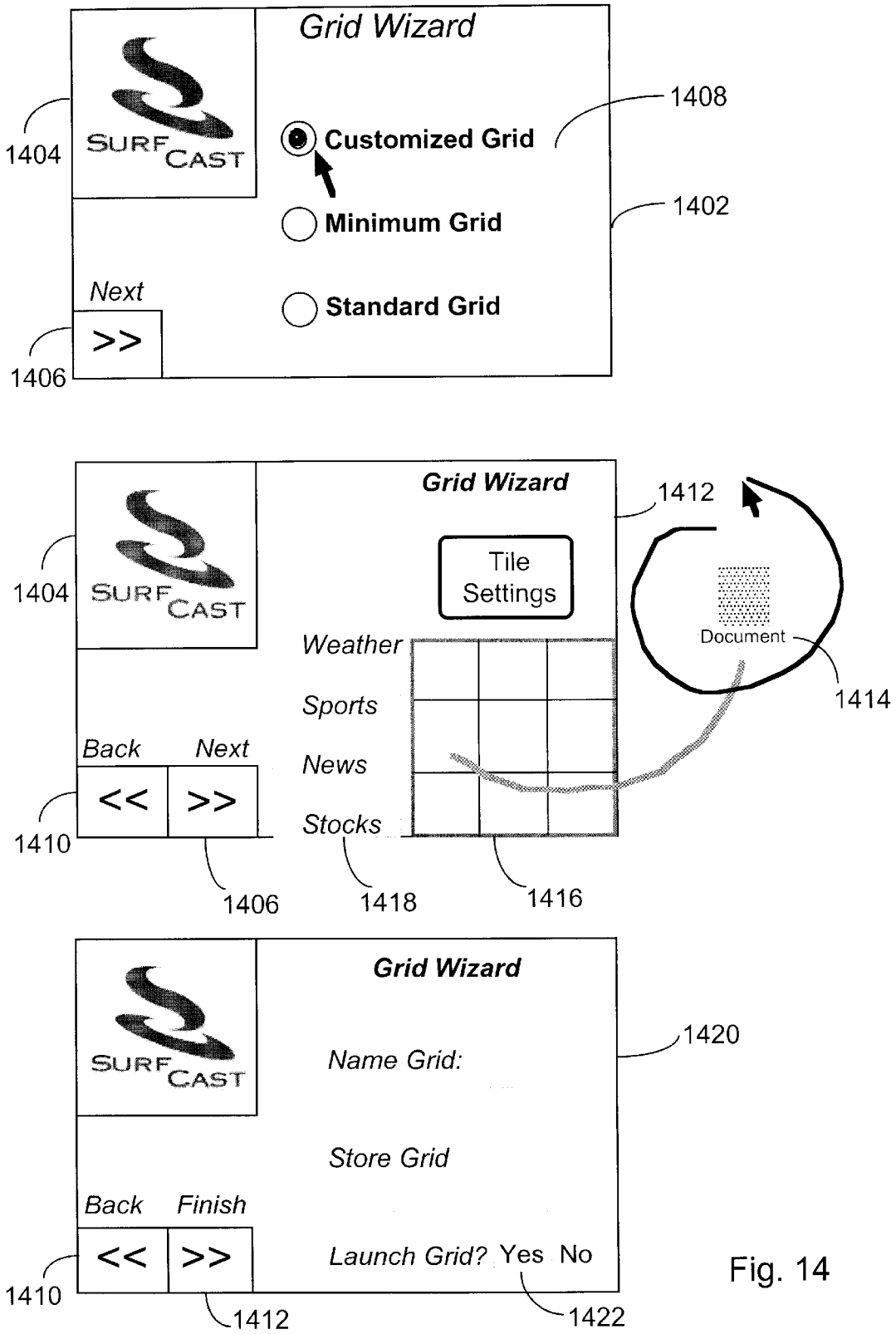
Grid Wizard
SURF CAST
Customized Grid
Minimum Grid
Standard Grid
Next
>>
1404
1408
1402
1406
Grid Wizard
SURF CAST
Tile Settings
Weather
Sports
News
Stocks
Back
Next
<<
>>
Document
1412
1414
1404
1410
1406
1418
1416
Grid Wizard
SURF CAST
Name Grid:
Store Grid
Back
Finish
<<
>>
Launch Grid? Yes No
1420
1410
1412
1422

Fig. 14

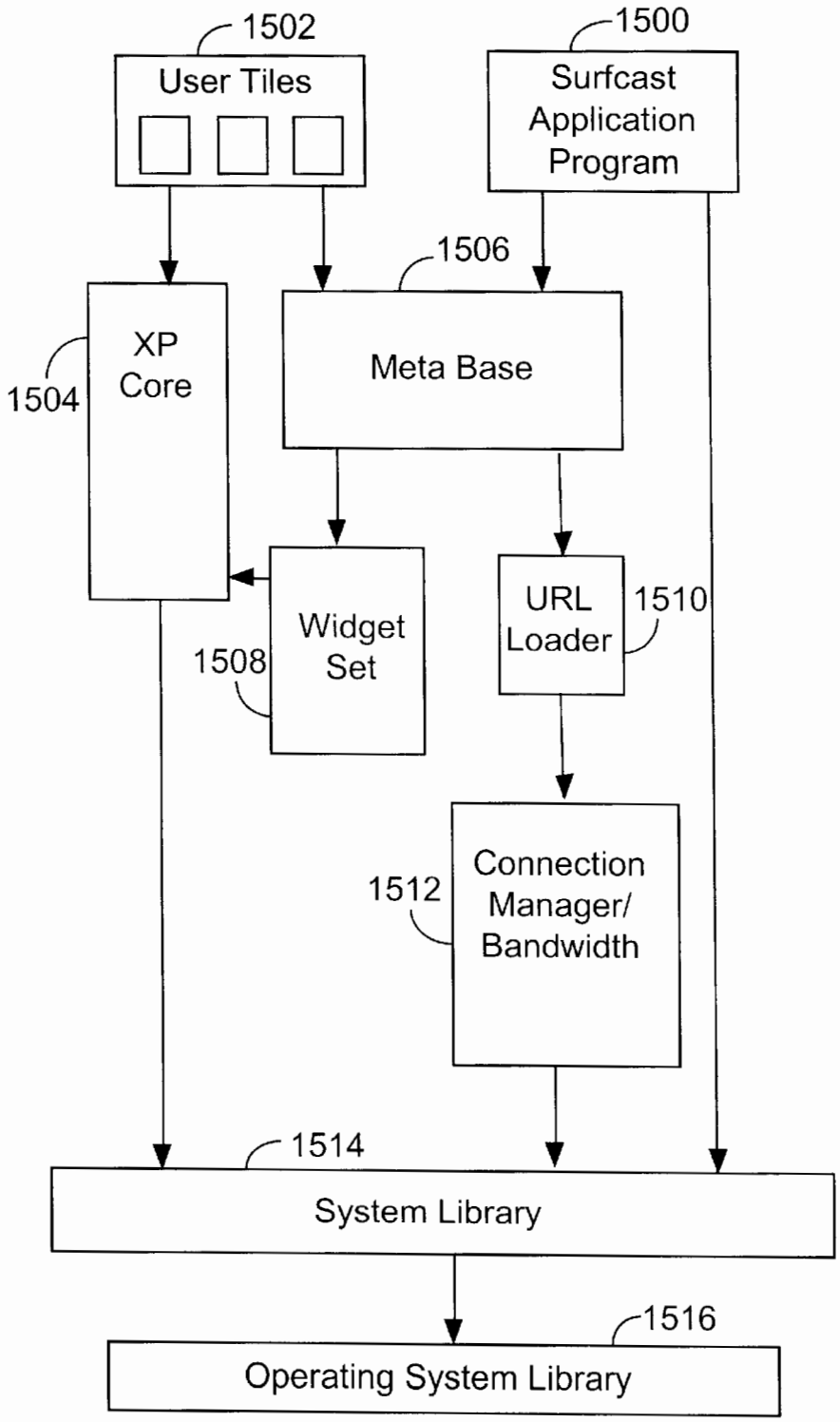
1502
User Tiles
1500
Surfcast Application Program
1506
XP Core
1504
Meta Base
Widget Set
1508
URL Loader
1510
Connection Manager/ Bandwidth
1512
1514
System Library
1516
Operating System Library

Fig. 15

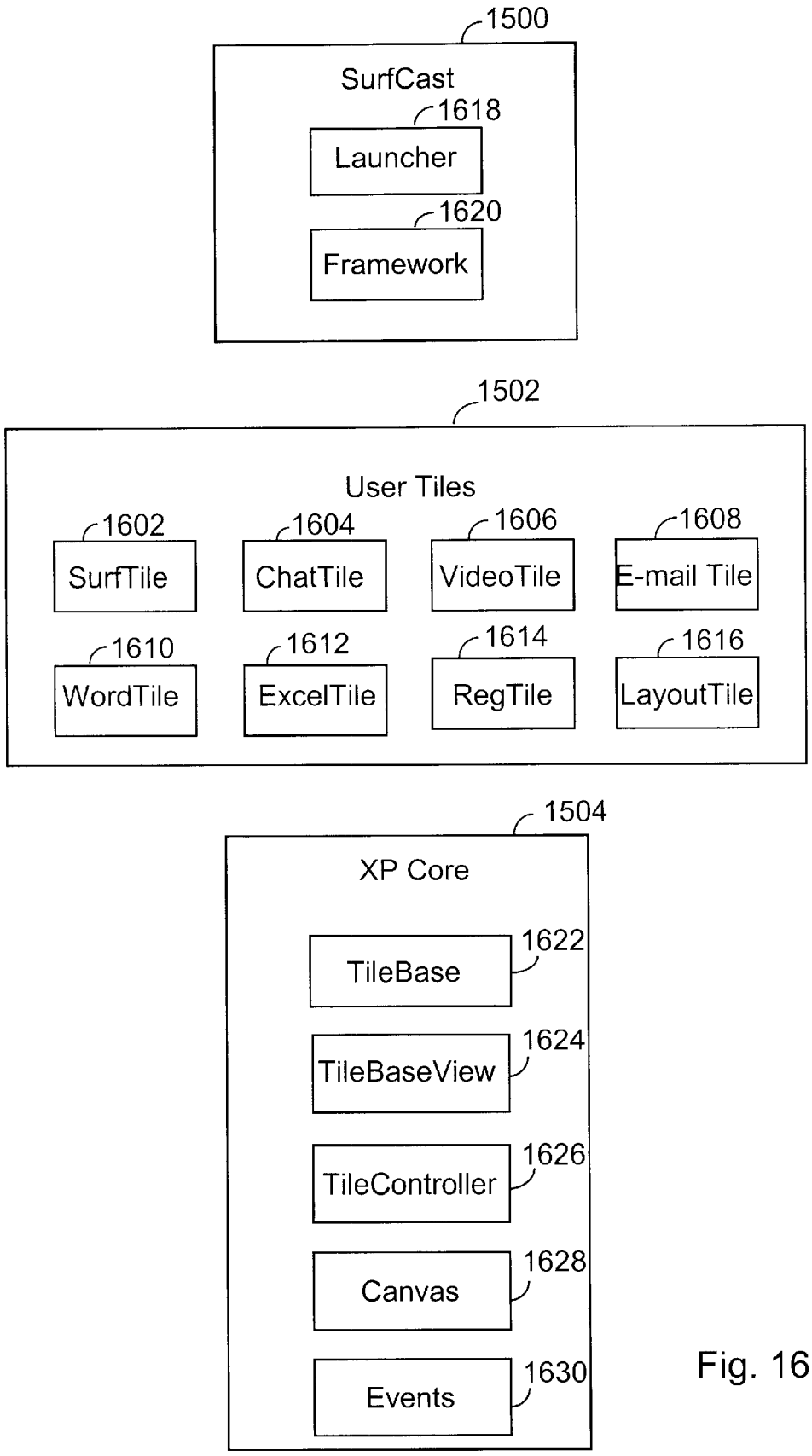
1500
SurfCast
1618
Launcher
1620
Framework
1502
User Tiles
1602
SurfTile
1604
ChatTile
1606
VideoTile
1608
E-mail Tile
1610
WordTile
1612
ExcelTile
1614
RegTile
1616
LayoutTile
1504
XP Core
TileBase
1622
TileBaseView
1624
TileController
1626
Canvas
1628
Events
1630

Fig. 16

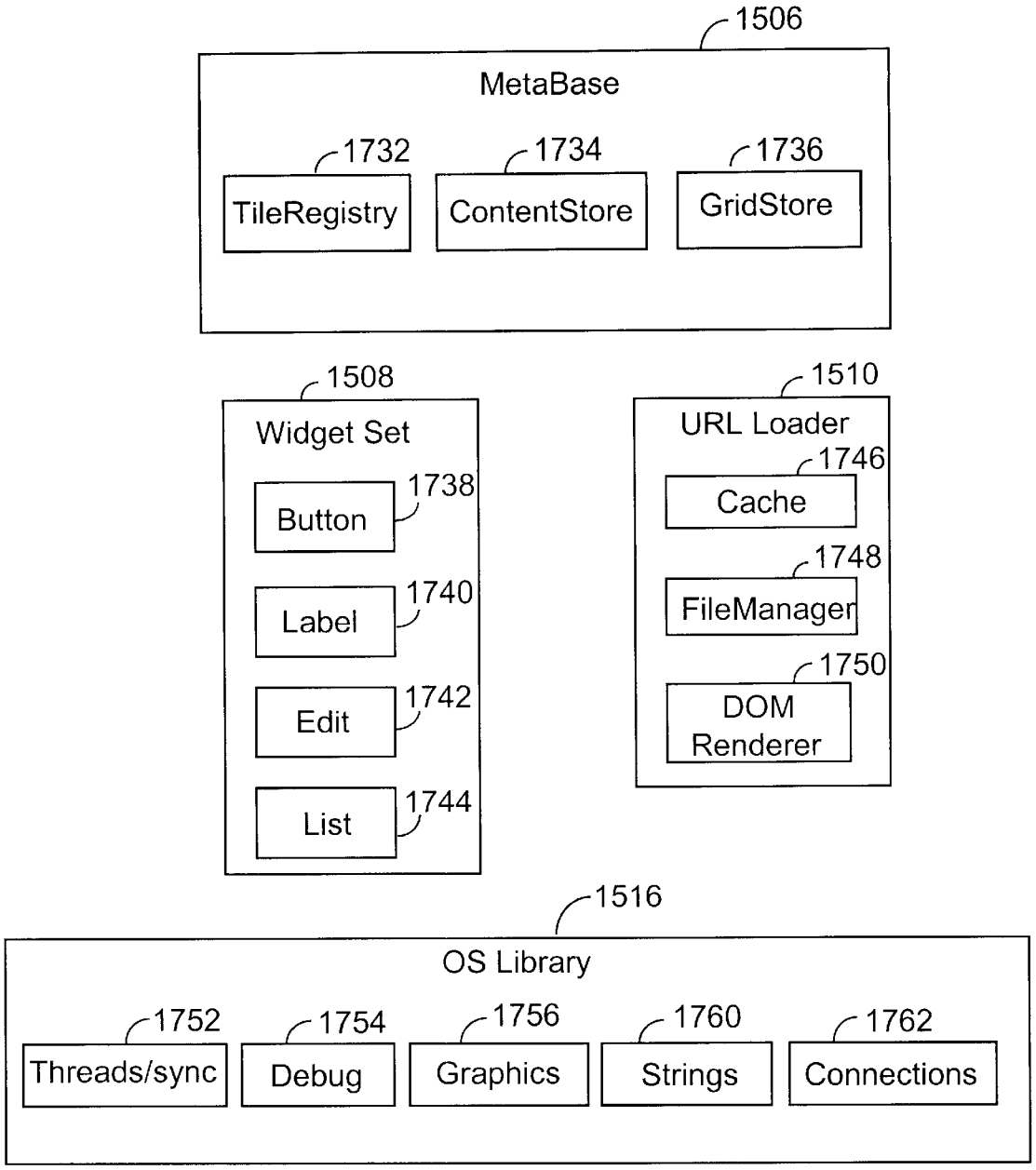
1506
MetaBase
1732
TileRegistry
1734
ContentStore
1736
GridStore
1508
Widget Set
1738
Button
1740
Label
1742
Edit
1744
List
1510
URL Loader
1746
Cache
1748
FileManager
1750
DOM Renderer
1516
OS Library
1752
Threads/sync
1754
Debug
1756
Graphics
1760
Strings
1762
Connections

Fig. 17

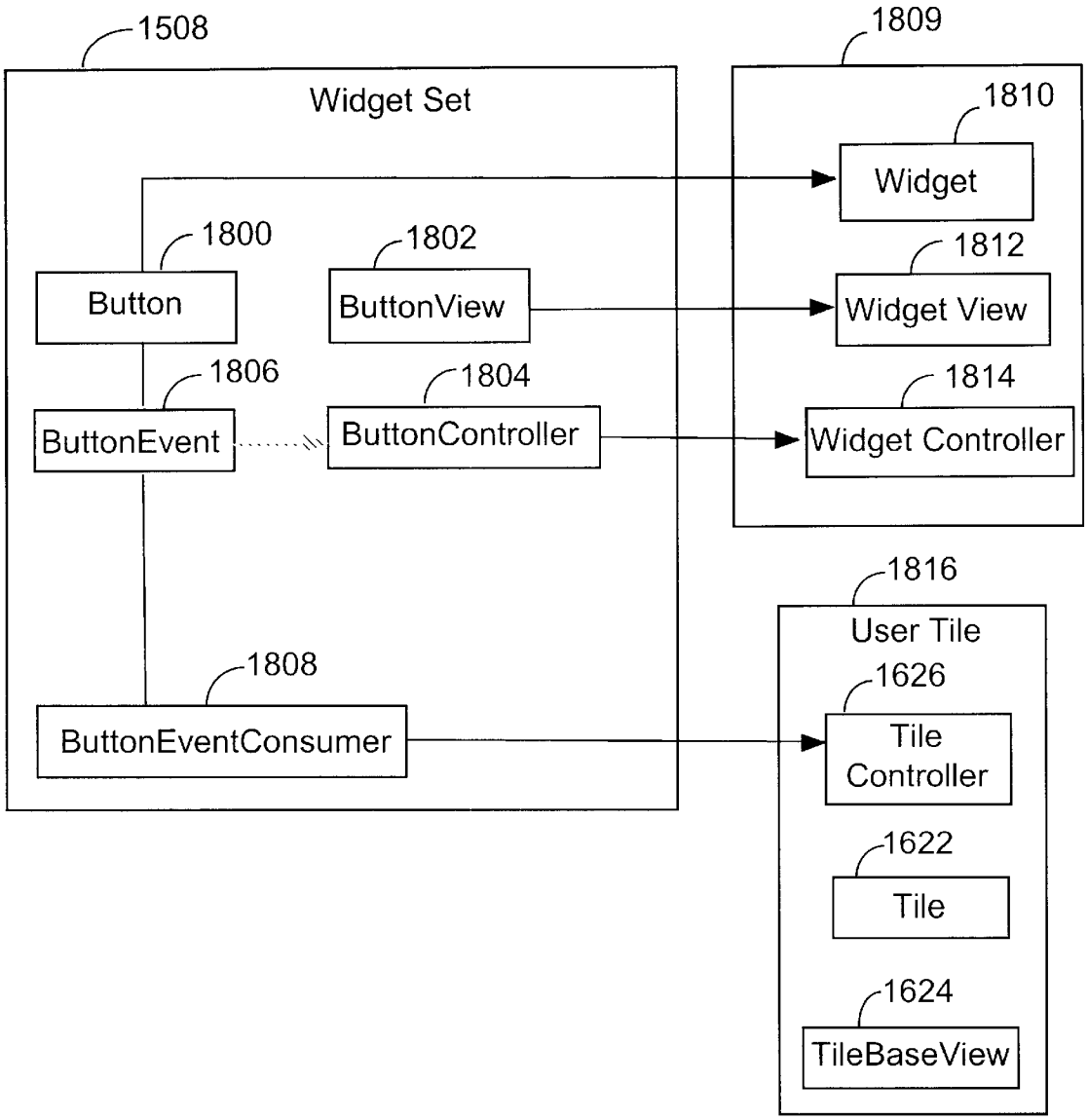
1508
Widget Set
1800
Button
1802
ButtonView
1806
ButtonEvent
1804
ButtonController
1808
ButtonEventConsumer
1809
1810
Widget
1812
Widget View
1814
Widget Controller
1816
User Tile
1626
Tile Controller
1622
Tile
1624
TileBaseView

Fig. 18

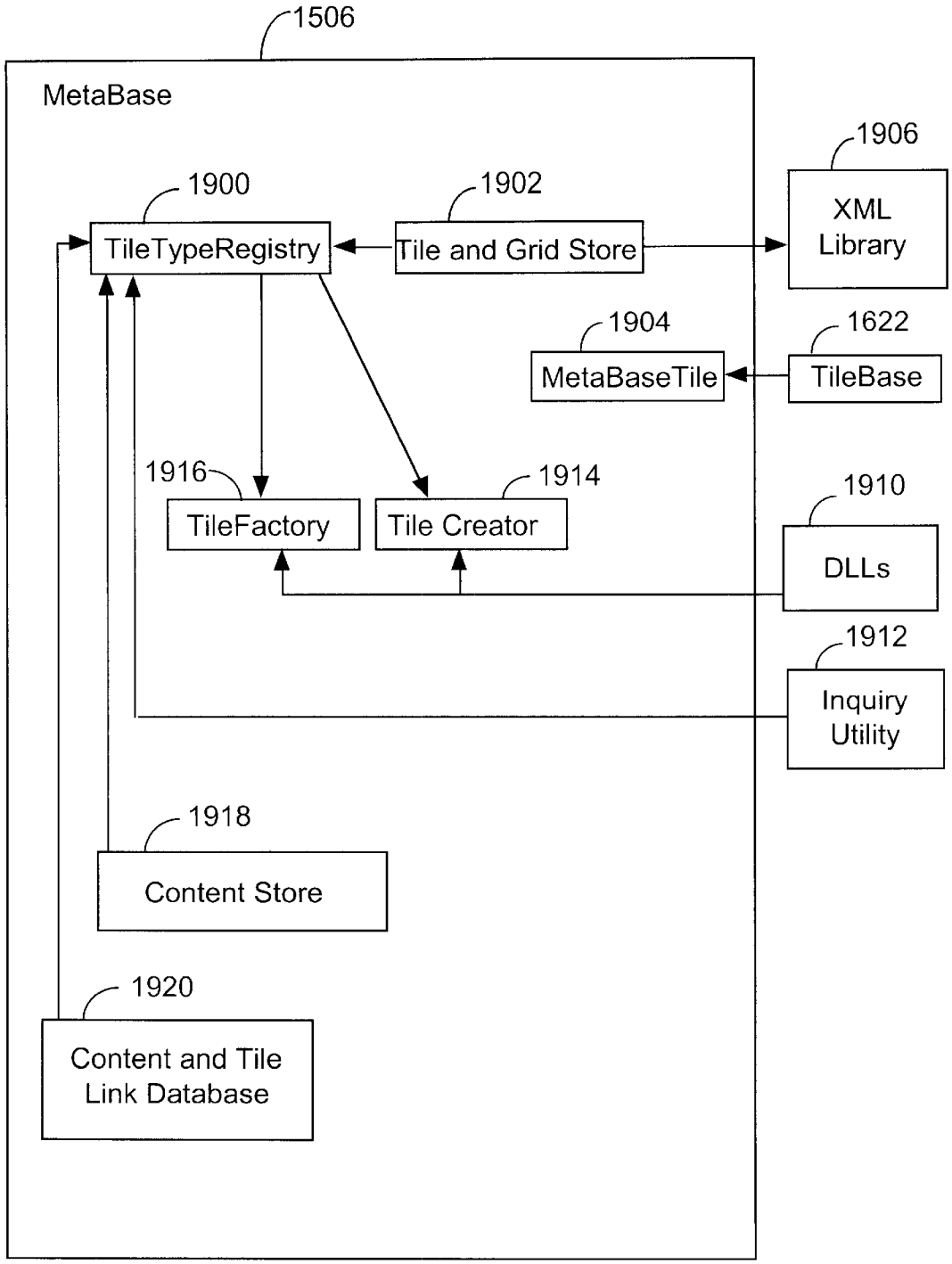
1506
MetaBase
1900
TileTypeRegistry
1902
Tile and Grid Store
1906
XML Library
1904
MetaBaseTile
1622
TileBase
1916
TileFactory
1914
Tile Creator
1910
DLLs
1912
Inquiry Utility
1918
Content Store
1920
Content and Tile Link Database

Fig. 19

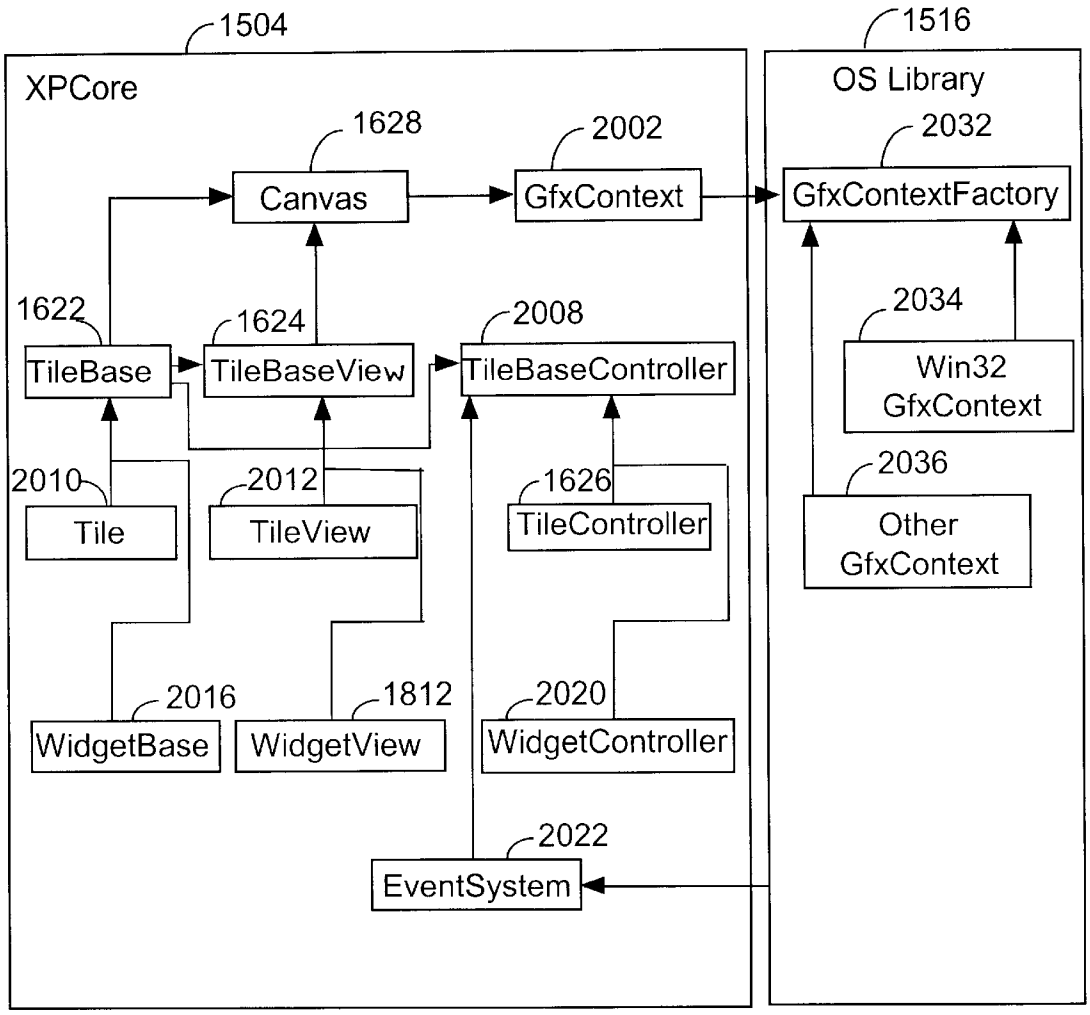
1504
XPCore
1628
Canvas
2002
GfxContext
1516
OS Library
2032
GfxContextFactory
1622
TileBase
1624
TileBaseView
2008
TileBaseController
2034
Win32
GfxContext
2010
Tile
2012
TileView
1626
TileController
2036
Other
GfxContext
2016
WidgetBase
1812
WidgetView
2020
WidgetController
2022
EventSystem

Fig. 20

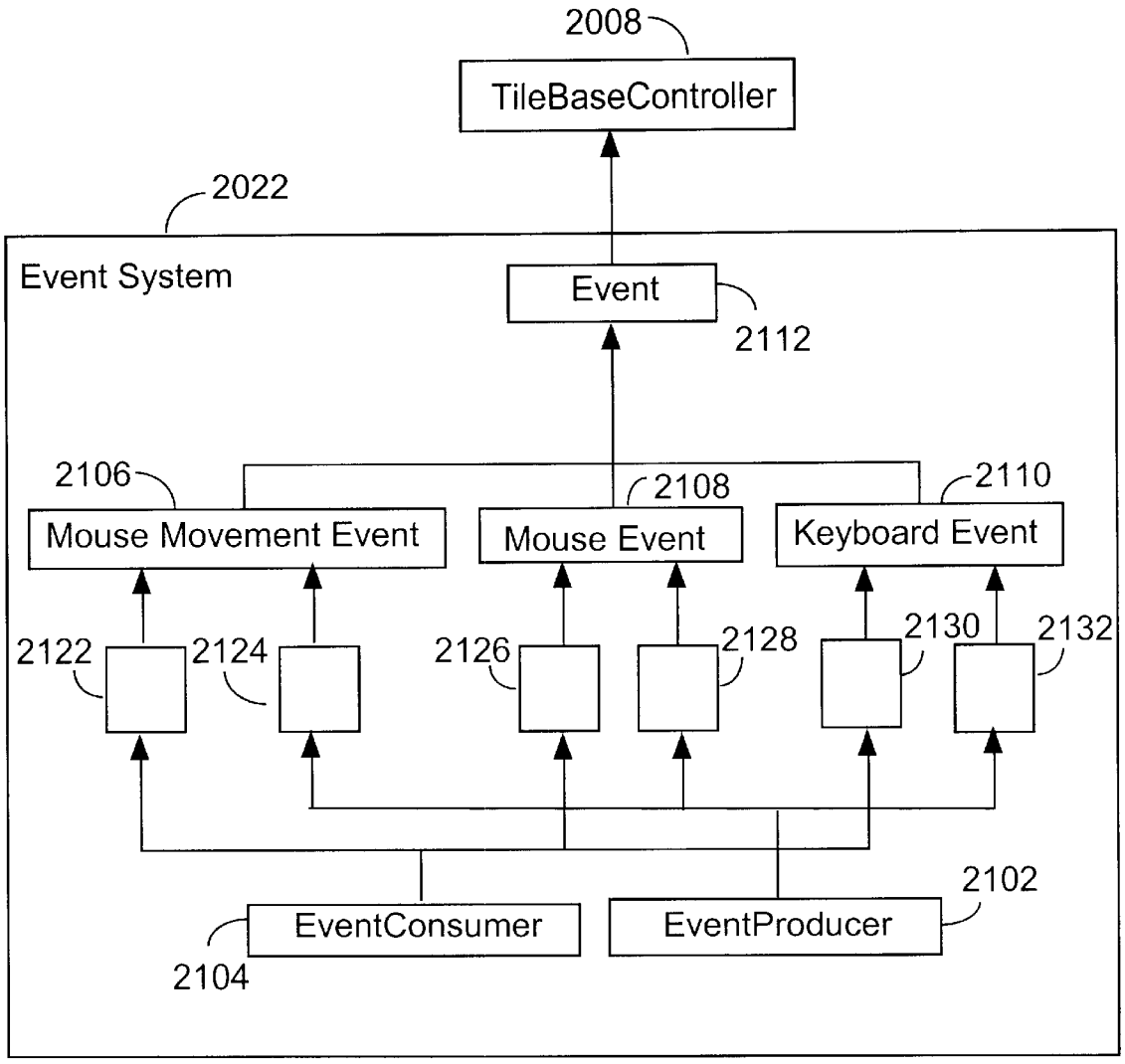
2008
TileBaseController
2022
Event System
Event
2112
2106
2108
2110
Mouse Movement Event
Mouse Event
Keyboard Event
2122
2124
2126
2128
2130
2132
2102
EventConsumer
EventProducer
2104

Fig. 21

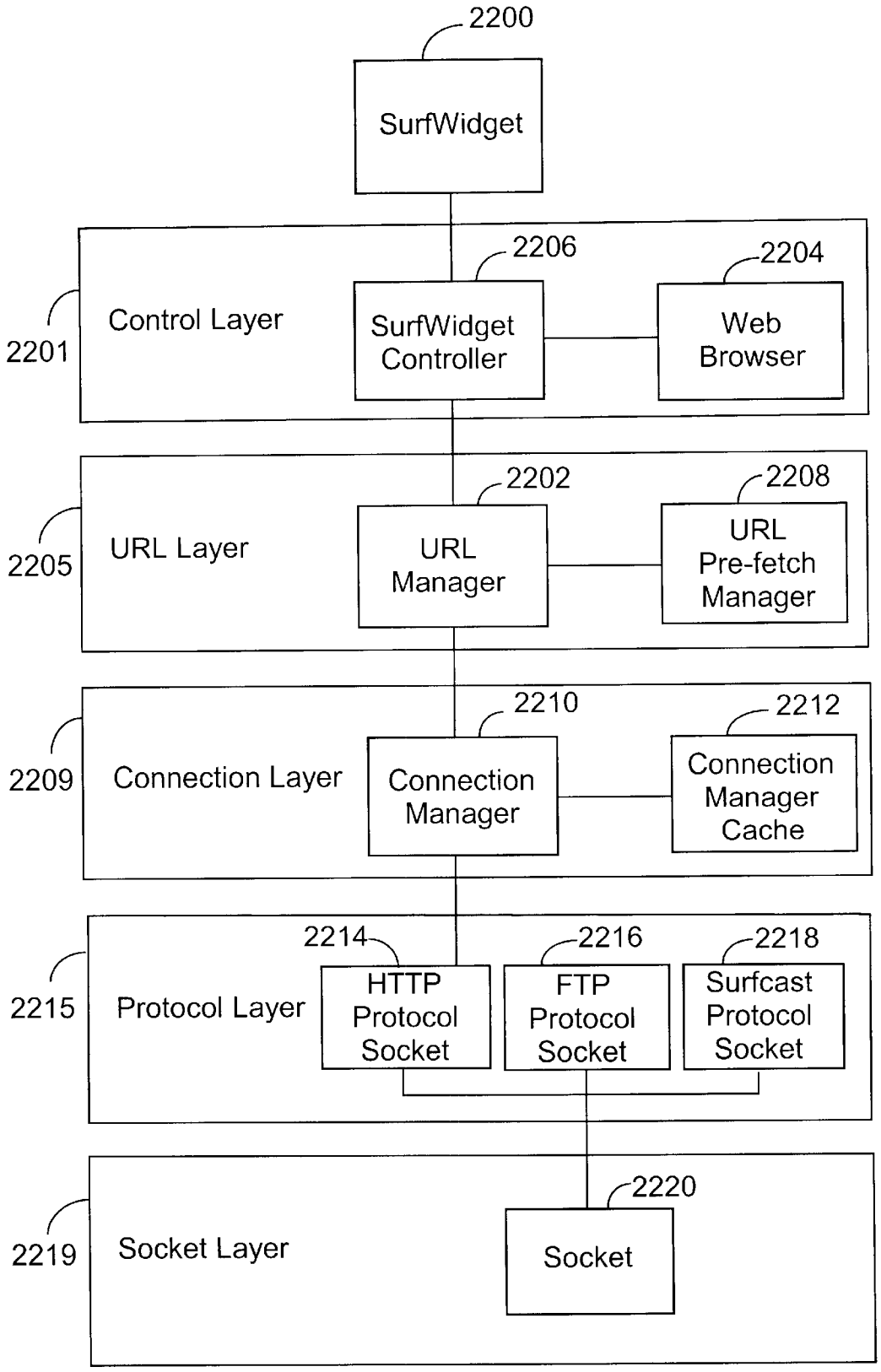
2200
SurfWidget
2201
Control Layer
2206
SurfWidget Controller
2204
Web Browser
2205
URL Layer
2202
URL Manager
2208
URL Pre-fetch Manager
2209
Connection Layer
2210
Connection Manager
2212
Connection Manager Cache
2215
Protocol Layer
2214
HTTP Protocol Socket
2216
FTP Protocol Socket
2218
Surfcast Protocol Socket
2219
Socket Layer
2220
Socket

Fig. 22

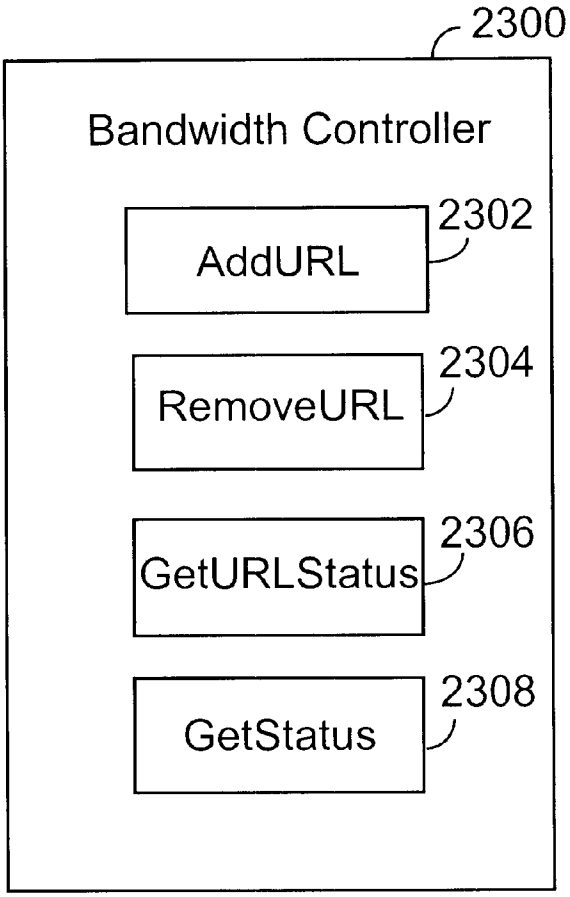
2300
Bandwidth Controller
AddURL
2302
RemoveURL
2304
GetURLStatus
2306
GetStatus
2308

Fig. 23

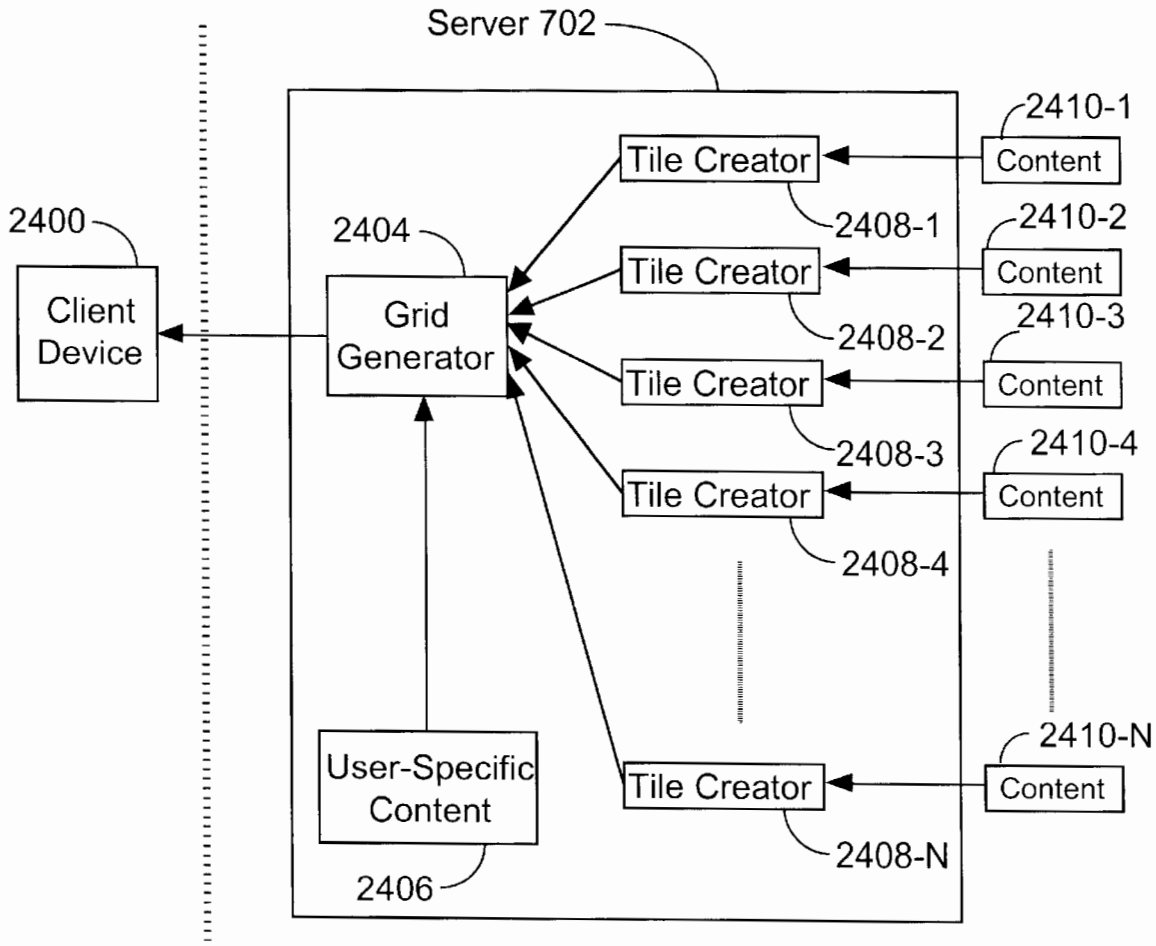
Server 702
2400
Client Device
2404
Grid Generator
Tile Creator
2408-1
Tile Creator
2408-2
Tile Creator
2408-3
Tile Creator
2408-4
Tile Creator
2408-N
2410-1
Content
2410-2
Content
2410-3
Content
2410-4
Content
2410-N
Content
User-Specific Content
2406

Fig. 24

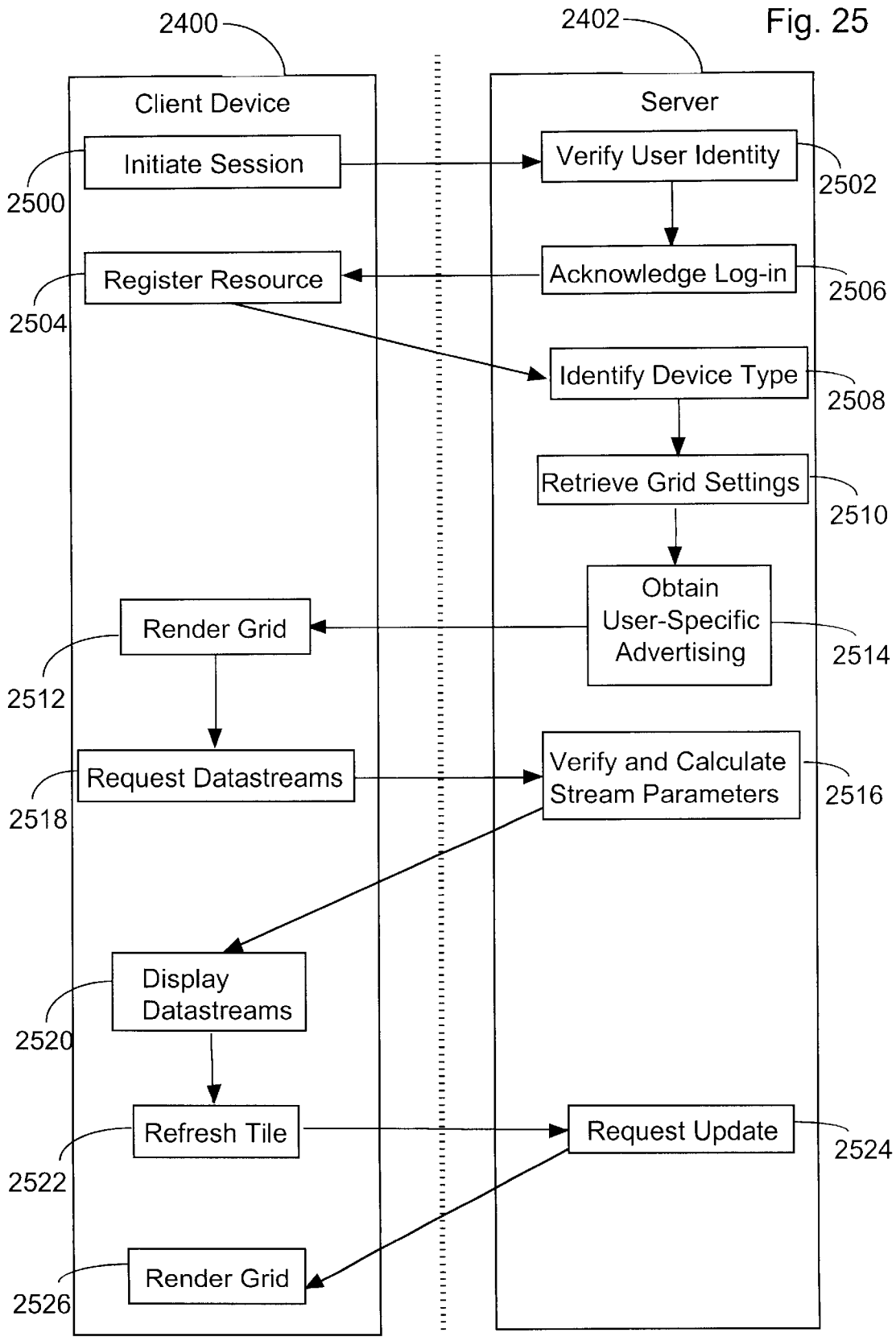
2400
2402
Fig. 25
Client Device
Server
Initiate Session
2500
Verify User Identity
2502
Register Resource
2504
Acknowledge Log-in
2506
Identify Device Type
2508
Retrieve Grid Settings
2510
Obtain User-Specific Advertising
2514
Render Grid
2512
Request Datastreams
2518
Verify and Calculate Stream Parameters
2516
Display Datastreams
2520
Refresh Tile
2522
Request Update
2524
Render Grid
2526

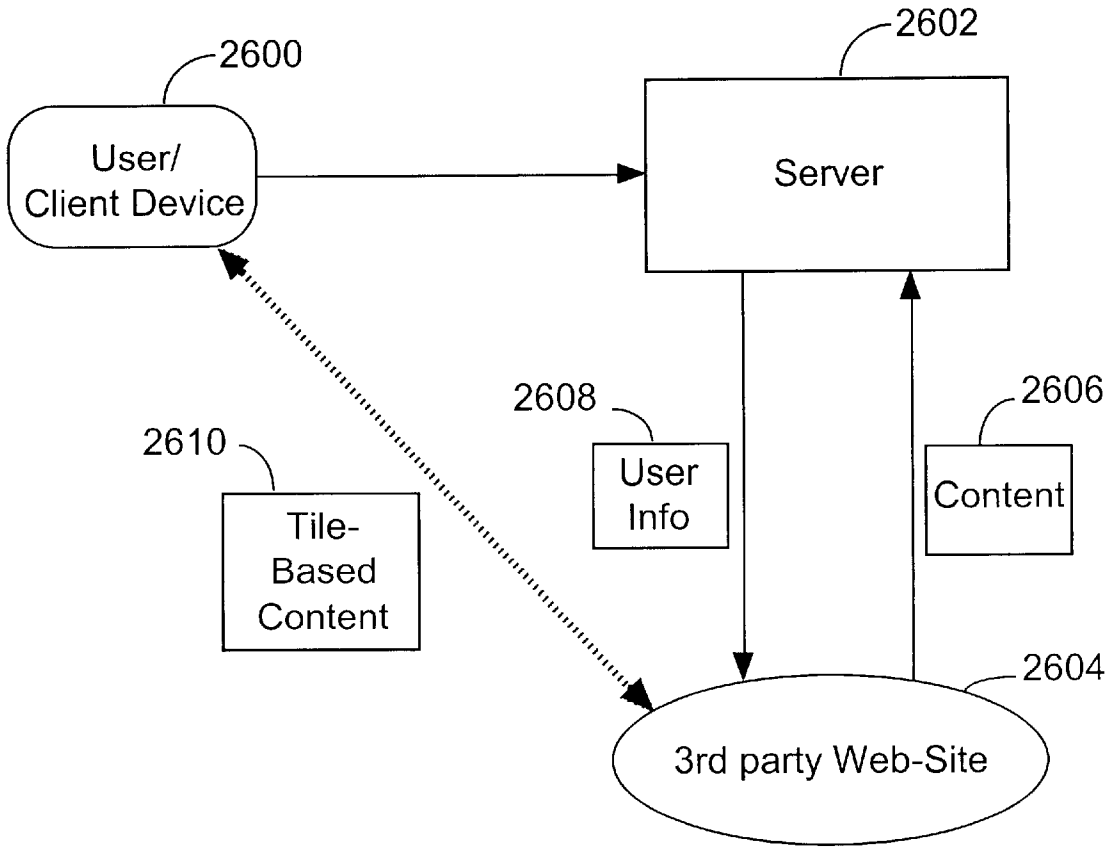
2600
User/
Client Device
2602
Server
2608
User
Info
2606
Content
2610
Tile-
Based
Content
2604
3rd party Web-Site

Fig. 26

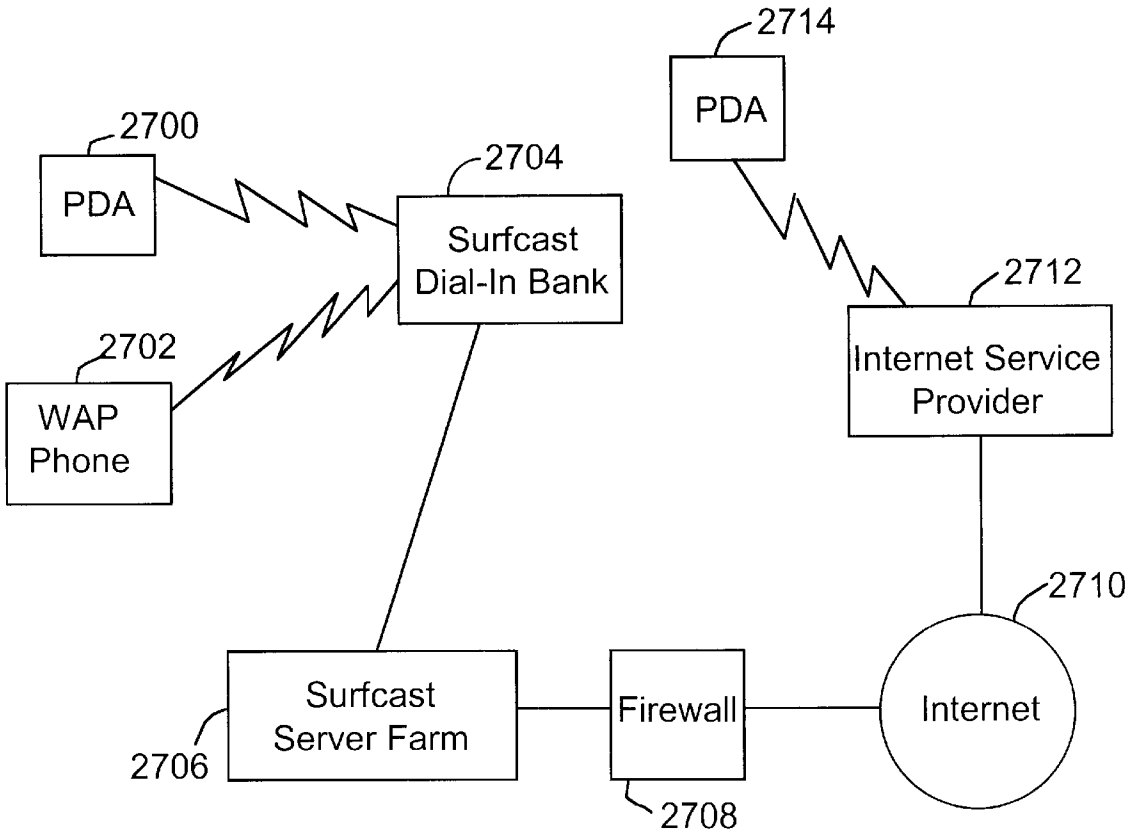
2714
PDA
2700
PDA
2704
Surfcast
Dial-In Bank
2712
Internet Service
Provider
2702
WAP
Phone
2710
Surfcast
Server Farm
Firewall
Internet
2706
2708

Fig. 27

SYSTEM AND METHOD FOR SIMULTANEOUS DISPLAY OF MULTIPLE INFORMATION SOURCES

This application claims priority to provisional patent application entitled "System and Method For Simultaneous Display of Multiple Datastreams", Ser. No. 60/162,522, filed Oct. 29, 1999.

FIELD OF THE INVENTION

The present invention relates to methods of presenting information from a variety of sources on a display device. Specifically the present invention describes a graphical user interface for organizing simultaneous display of information from a multitude of sources.

BACKGROUND OF THE INVENTION

The scope of the global communications capacity, comprising fixed link and wireless networks, continues to expand rapidly. The variety and complexity of communication devices proliferates and the number of users escalates. As a result, users are faced with increasingly complex systems and interfaces with which to manage multiple sources of information. At the same time, society has increased its demands on time and productivity so that users no longer have the luxury of focusing their attention on a single source of information or means of communication. Instead, the norm today is for people to carry out many tasks simultaneously.

As might be expected, these demands have exposed substantial problems in current communications technology. In particular, users are faced with insufficient resources to manage and access the volume and variety of information available to them in an efficient and productive manner. While a variety of tools designed to assist in accessing and managing these resources have been created, these tools remain unsatisfactory. Consequently, users are impeded by the myriad of information sources, each with its own method of use and often with its own login and password requirements, as well as by slow retrieval times to access the information. The result is an unacceptable delay for many operations.

Under the present art, for example, it is usually the case that a user lacks the bandwidth resources to receive multiple video signals simultaneously. If an individual were receiving one video signal, it is usually impractical to receive a second at the same time due to bandwidth constraints. Thus, the user could not, for example, monitor multiple video data streams of sporting or news events; instead, the user could monitor only one video data stream at a time.

To address such bandwidth resource limitations, the current art only accesses information when the user requests it. As a result, there is an inevitable delay between the user's request for information and the communications device's presentation of it. For example, if a user wants to monitor sources of news information on the Internet using current browser technology, the user must continuously and manually request the news data from its source to determine whether the data has been updated. Prior to requesting and subsequently receiving the data, the user has no way of knowing whether the data has been updated. In any case, the user is unlikely to want to refresh the status of each application by manual intervention himself at the frequency necessary to ensure that the information is up to date. Additionally, if a user wishes to view two or more webpages simultaneously, he must run two or more copies of the web-browser program. The act of manually refreshing the content of alternate programs in order to ascertain which have any new material to offer is fundamentally inefficient.

Similarly, the user's access to such data is not in real-time or even near real-time because each time the user wants to view the information, he must request it from its source and wait for the source to transmit it to him. Thereafter, he must wait until his communications device has received and processed the information before it is presented. For complex information such as a video signal, this can take longer than a minute to occur; and, even for simple information, this process can take many seconds. Thus, the user is denied real-time or near real-time access to the information.

Present technology that locally stores or "caches" previously accessed information to make it available to the user more rapidly does not solve this problem, because the cached information is necessarily old. The user's communications device must still verify the accuracy of the information with the source before the system displays the cached information. As a result, the user is denied real-time or near real-time access to updated information.

Similarly, if a user wishes to make two or more simultaneous downloads there is no control over the relative rates at which the respective downloads would occur. So-called "push technologies" attempt to address this problem by organizing information from a number of related sources and sending it periodically to a user. While this arrangement frees a user from actively participating in the download, the price is that the user has little control over the organization of the information and can only practically handle a small number of such transmissions at any one time. Each transmission is subject to the bandwidth available.

Of course, not all tasks require the same allocation of resources and, correspondingly, not all tasks have equal priorities for a given user. In particular, a user may wish to customize the information environment in such a way that many processes are occurring synchronously, yet each is communicating with the user at a rate that is acceptable. For example, a television viewer may wish to know what is being broadcast on several channels at the same time but only care to watch one of them closely. An Internet user may wish to be continually in touch with sources of data from audio, video, chat-room, video-conferencing and e-mail checker utilities, but not wish all of them to update at the same frequency; the user would be satisfied merely to see at a glance a recent status of each. Some of these processes, such as chat-room activities entail very little data transmission and can, indeed, be effectively updated on a continuous basis, whereas others require a great deal of bandwidth but could usefully be sampled at a lower rate. The current art lacks any technology for controlling the respective refresh rates of several simultaneous information sources.

At the same time that users are limited by system resources, they are also finding that they have no effective way of managing the multiplicity of available data types and information sources. It is difficult both to conduct two or more different types of computing activities at the same time or to monitor two or more different information sources simultaneously because the tools available are confusing, inflexible, and/or otherwise difficult to implement. Users require immediate access to a wide variety of up to date content presented in a flexible, easily customized interface.

In addition to restrictions in the capacity of today's networks, there is very little conformity amongst the information content. A typical communication device, such as a personal computer, television or mobile telephone, com-

prises a display unit connected to a processing unit that can accept information from many different sources. As described above, the signals, data and/or datastreams that are available to such a device are diverse, including, for example, HTML content, e-mail, or streaming audio and video. Correspondingly, the software tools that interpret and process the different information sources present each in a different way to the user. From a user's perspective, distinctions between the different types of information could usefully be removed so that each is viewed in a similar way and such that the current presentation associated with any information source gives an immediate indication of its current content. The present reality is different, however. The user must contend with a wide range of icons and program windows that may occupy space on a user's display screen. Another lack of conformity is the different mode of behavior for programs that address different types of information. An effort to standardize the ways in which different types of information are presented to the user would be advantageous. Equally, unification of the way in which those types of information are managed would save time and increase user productivity, for productivity is reduced when users must cope with different attributes of different programs and learn distinct paradigms for different types of information.

The nature of the application program windows and their respective icons predominantly found on today's computer displays is restrictive. The application window typically displays the current content or output of only a single program and program icons convey nothing of the program's current state or content. Often, an icon is a static image which is merely characteristic of the program or data represented thereby rather than the program's current state or its information content. In the present art, there is no intermediate between a window or an icon.

Thus, while a window may be resized as appropriate, it will frequently occupy the full display area, effectively limiting the user to a view of a single program. It may have active areas around its borders such as menu bars, scroll bars, or tool bars designed to allow the user to control aspects of the window's appearance or to set parameters specific to the operation of the program controlling it. Icons, in contrast, offer ease of display when multiple programs are active, but they do not permit viewing or control of the underlying program or data represented thereby. Instead, icons require user intervention, typically in the form of a mouse-click on an icon of interest, to view or control the program or information. Consequently, the user's viewing options are limited to a choice between one presenting very limited information about a multitude of programs and information and one presenting full information, but of only a single program or data source.

The fact that the GUI's of the present art are largely restricted to icons and windows diminishes the capacity to organize, manage, and access available information. With the Internet representing an ever expanding view of currently accessible global information, the need for flexible information management tools has become crucial. Similarly, with the current expansion of television programming available, for example, through cable television and satellite broadcasting, the need to manage this audiovisual content becomes cute. The convergence of television programming and computers increases these management needs all the more.

Current computer operating system software utilizes bookmarking schemes for managing Internet locations and complex database technologies for managing specialist information. Neither provides visual immediacy or ease of layout. Bookmark hierarchies are presented as cascading textual menus and database technologies arrange information into rigidly defined structures. The missing capability is a visual categorization in which an area of the display unit itself becomes the bookmark and the arrangement on the display becomes the categorization, independent of the type of content.

While the most common way of accessing information sources is via a personal computer, present day technology exists to communicate via a television, handheld computing device, or even mobile telephones, in which case Internet content and other data can be displayed as some portion of the screen. There is a growing convergence of technologies: televisions are beginning to find application as viewers of non-television data, (for example through use of "Vertical Blanking Interval" technology in which a signal is inserted into the main video signal or through set-top boxes providing limited computer and communications functionality); computers are already finding application for the display of movies, real-time data streams, and the playing of audio data; handheld computing devices and mobile telephones are also being enabled to access the Internet and other information sources.

To summarize the current state of the art, display technologies currently lack an interface which is capable of organizing any type of information, presenting such information to the user in a consistent manner and in such a way that all currently open channels are able to indicate their activity on a continual basis and which could run on any device.

SUMMARY OF THE INVENTION

Accordingly, the present invention provides an easy to use graphical interface that facilitates the organization and management of multiple data sources corresponding to a user's needs and interests. The present invention comprises a grid of tiles that resides on the user's computer desktop. The grid of tiles provides a uniform, graphical environment in which a user can access, operate, and/or control multiple data sources on electronic devices. The graphical environment is uniform with respect to the source of accessed information and can manage multiple streams of content, entirely of the user's choice. For example, the invention presents video clips, e-mail messages, television shows, Internet sites, application programs, data files and folders, live video streams, music, radio shows, and any other form of analog signal, digital data or electronically stored information, to the user uniformly and simultaneously, regardless of whether the information is stored locally or available via modem, T1 line, infrared, or any other form of communication. The user's impression of the interface is also independent of the type of electronic device upon which it is implemented.

The present invention comprises a method executed by a computer under the control of a program stored in computer memory, said method comprising the steps of: partitioning a visual display of a computer into an array of tiles in a non-overlapping configuration; assigning a first refresh rate to a first tile of said array of tiles and a second refresh rate to a second tile of said array of tiles; updating information presented to said first tile in accordance with said first refresh rate; and updating information presented to said second tile in accordance with said second refresh rate.

The present invention additionally includes an electronic readable memory to direct an electronic device to function in a specified manner, comprising: a first set of instructions

to control simultaneous communication with a plurality of datastreams: a second set of instructions to partition a display into an array of tiles; a third set of instructions to associate a first datastream of said plurality of datastreams to a first tile of said array of tiles and a second datastream of said plurality of datastreams to a second tile of said array of tiles; a fourth set of instructions to retrieve data from said first datastream in accordance with a first retrieval rate and retrieve data from said second datastream in accordance with a second retrieval rate; and a fifth set of instructions to present data to said first tile in accordance with said first retrieval rate and present data to said second tile in accordance with said second retrieval rate.

The application program of the present invention runs on many different devices, including, but not limited to set-top box, personal computer and hand-held device. The grid and tiles retain the same characteristics, regardless of operating device. For example, the tiles remain individually configurable and can offer near real-time views of their data content. The application therefore permits the user's interaction with a range of electronic devices to be unified.

BRIEF DESCRIPTION OF THE DRAWINGS

Additional objects and features of the invention will be more readily apparent from the following detailed description and appended claims when taken in conjunction with the drawings, in which:

FIG. **1** shows a representative embodiment of the user interface of the present invention comprising a grid of tiles as might be depicted on a display screen.

FIG. **2** depicts a system that, in accordance with the present invention, accepts data in at least one form through at least one port and which additionally displays data to a user.

FIG. **3** shows stylised examples of an icon and an application window as are commonly found in computer display systems of the background art.

FIG. **4** shows several tiles as might be found in a typical embodiment of the present invention.

FIG. **5** shows an exemplary data structure of the tile object within the graphical user interface of the current invention.

FIG. **6** shows one embodiment of a tile in markup language.

FIG. **7** shows the hierarchy of software objects underlying the current invention, comprising a grid object, tile objects and files or application software.

FIG. **8** shows an exemplary layout of the display produced by the current invention.

FIG. **9** shows an alternative exemplary layout of the display produced by the current invention.

FIG. **10** shows an exemplary layout of the display of the current invention wherein a tile contains another instantiation of a grid.

FIG. **11** shows an exemplary layout of the display of the current invention including specific examples of tile contents.

FIG. **12** shows the data structure of the grid object which forms part of the graphical user interface of the current invention.

FIG. **13** shows one embodiment of a grid in markup language.

FIG. **14** shows a sequence of windows that demonstrate how a grid might be set up for initial use by a "wizard" tool in one embodiment of the present invention.

FIG. **15** shows an example of the architecture of the computer program in a preferred embodiment of the present invention.

FIG. **16** shows the architecture of the application program and its components in a preferred embodiment of the present invention.

FIG. **17** shows the architecture of components of the computer program in a preferred embodiment of the present invention.

FIG. **18** shows an outline of the widget-set used in a preferred embodiment of the present invention.

FIG. **19** shows an outline of the metabase according to a preferred embodiment of the present invention.

FIG. **20** shows an outline of the XP Core and its interaction with the operating system library in a preferred embodiment of the present invention.

FIG. **21** shows an overview of the event system utilized in a preferred embodiment of the present invention.

FIG. **22** shows an overview of the connection layers that are responsible for controlling the download of multiple web-pages from the world wide web.

FIG. **23** shows a number of functions used by the bandwidth controller.

FIG. **24** is a schematic representation of the relationship between a server and a client device.

FIG. **25** shows a series of interactions between a client device and a server.

FIG. **26** shows how a user, a server and third party content providers communicate in accordance with an embodiment of the invention.

FIG. **27** shows an embodiment in which the application program communicates with one or more wireless devices.

DETAILED DESCRIPTION OF THE PREFERRED EMBODIMENTS

FIG. **1** shows an illustrative configuration of the graphical user interface of the present invention. A grid **1** consisting of a 3 by 3 matrix of nine tiles demonstrates some of the different contents that tiles can display. Tile **10** points to a database of stock quotes. Tile **20** displays the active folders in an electronic mail utility. Tile **30** displays a portion of an alphabetical list of quoted companies. Tiles **40**, **50**, **60**, **70** and **80** point to websites displaying, respectively, high technology news, electronic goods for sale, categories of business news, items available by auction and the Wall Street Journal. Tile **90** points to the file-viewer of a windows-based operating system and displays the currently accessible disc drives.

Within the scope of the present invention, an information source may comprise any analog signal, source of digital data or a datastream, including, but not limited to, video, audio, text and graphics. The information may be in any format, including but not limited to ASCII, bitmap, MP3, JPEG, GIF, TIFF, a mark-up language such as HTML, XML, VRML, HDML, formatted text such as rich text format, or binary.

FIG. **2** is a general representation of a data display system **100** within which the present invention may be implemented. System **100** comprises a central processing unit **104**, an input device **106**, data connection ports **108-1** through **108**-N, a display **110** and a main memory **112**, all connected via bus **116**. Residing in the memory **112** is an operating system **120**, a file system **122**, a cache **124** for temporary storage of information, application programs

128-1 through 128-N and a graphical user interface (GUI) program 126 that is responsible for presenting information on to display 110. Information may enter the system through any one of the ports 108-1 through 108-N which may themselves be connected to a tuner 114, or via a network interface 134 to a communications network. If a tuner 114 is employed, it may channel input from a wireless signal 130 or a cable network 132.

In one embodiment of the present invention, system 100 is a personal computer such as a desktop workstation or a portable notebook computer. In that case the input device 106 may be a keyboard, mouse, trackpad, trackball, or any combination thereof and the display 110 may be a conventional cathode ray tube (CRT) or active matrix flat-screen display. The network interface 134 may then be a connection to the internet or to a local area network via a cable and modem or a digital subscriber line.

In another embodiment of the present invention, system 100 is a mobile phone or personal digital assistant and the input device 106 may consist of several buttons on a keypad, a touch-sensitive screen with a touching device or a microphone and voice-recognition software. In this embodiment, the display 110 is preferably an LCD screen or an electroluminescent display and ports 108 receive data from radio signals or a portable modem.

In yet another embodiment of the present invention, system 100 comprises a set-top box wherein display 110 is a TV screen or monitor and tuner 114 accepts input in the form of a wireless signal 130 from broadcast transmissions or cable signals from the cable network 132. Input device 106 may be a hand-held remote control apparatus or buttons located on the set-top box or touch-sensitive areas of display 110.

As is known to those skilled in the art, a graphical user interface is a computer program that resides in memory 112 of some data processing system and that provides means for presenting information, input to and output from application programs 128 or content of datastreams from ports 108 on an associated display. In the background art each datastream is associated with a window. The graphical user interface allows a user to control the arrangement and display format of the data content in each window. Usually a graphical user interface permits a user to specify and alter operating parameters of application programs running on the system though, at any given time, a particular application program will take priority, meaning that a particular window will be displaying continually updating content. Typical operating parameters that may be changed depend upon the application program but include the number of buttons on a tool bar and number of visible toolbars, the size of the text displayed and the color of the background.

By contrast, the graphical user interface of the current invention not only permits a user to control the layout of the data content but to prioritize each application program running on the system and each datastream of interest. A novel feature of the present invention is that the data content of any number of the programs can vary in real time and the rate at which the display of each is updated can be controlled by the user.

Tile Objects

In the ensuing discussion, tile objects are introduced and described and contrasted with existing elements of graphical user interfaces. A tile presents content from any information source.

Conventional graphical user interfaces of the background art provide two distinct representations of programs, files and datastreams, as shown in FIG. 3. One representation is an icon 320, the other is a window 340. An icon typically occupies only a relatively small proportion of the available display area and is an easily recognizable depiction of the program or file, either through its logo 322 or some characteristic picture with the name 324 of the program visible. An icon can be selected by, for example, a touch screen pointer, a cursor controlled by a mouse with a button or by a keyboard stroke or any combination of the foregoing. In response to a further selection operation on an icon, for example a double-click of a mouse button, the graphical user interface will provide a window that can be used to communicate further information to the program or review the associated datastream.

The window may occupy a substantial percentage of available screen space, usually 90–100%. The window 340 usually comprises a title bar 348 and a display area 354. The window 340 can commonly be resized by the user for example by using buttons 352 or a draggable area 356 and has a format which contains many active areas around its borders. Examples of active areas include a menu bar 342, a vertical scroll bar 344, a horizontal scroll bar 350 and one or more tool bars 346. Each active area may be used to control aspects of the window's appearance or to set parameters specific to the operation of the program associated with it such as text formatting options in a word-processing package or redirection of a web-browser to its stored home location.

In the present invention, a third graphical representation of programs and files, herein called a tile, is introduced. Tiles permit "dynamic bookmarking" of information in that each tile is a viewer of a single information source—including streaming data sources—and can be customized with the user's choice of content.

A tile is different from an icon because it provides a real-time or near-real time view of the underlying information in that it contains continually refreshed content. A tile is different from a window because a tile will typically be smaller in size, allowing the user to view multiple tiles simultaneously if desired.

A tile provides an at-a-glance view of the current status of the program or file associated with it but does not necessarily have the large number of active areas associated with windows such as title bar, menu bar and scroll bars. Therefore tiles lead to a reduction in clutter on the display screen because many tiles may be displayed simultaneously without overlapping with one another in the way that windows must necessarily do. Tiles are superior to icons because they give an immediate indication of the current state of the file or program and have utility functions associated with them, as described below. Another advantage of using tiles is a uniformity of appearance between tiles which correspond to different programs and datastreams. The display content of a tile will differ from application to application though its size and format need not.

A tile is associated with a program, file or datastream, in the same way that an icon and a window are. A tile may present data in any of a number of ways. For example, in the preferred embodiment, the tiles may present a miniaturized, "thumbnail" view of the underlying information; a "porthole" view of a portion of the underlying information as viewed at full size; a symbol indicating whether the information has been updated since it was last viewed; or a custom interface designed to allow rapid access to the underlying information. The way in which a tile displays content may be independently configured for each tile.

FIG. **4** illustrates representative tiles. Tile **402** displays a picture or graphic such as may be stored in a bit-map, JPEG, TIFF or GIF file, or on a world-wide web page. The content of tile **402** is typically a miniaturized representation of a graphic or still-frame from a datastream. Tile **404** displays a portion of a text document or text of a world-wide web page. In this sense the tile functions as a transparent panel placed on top of a document, thus permitting a portion of the document to be displayed. Tile **406** displays a further array of tiles that may be displayed in full by expanding tile **406** to occupy the full area of the display. Tile **408** has been configured to link to an electronic mail program. An alarm setting associated with tile **408** has been configured so that the tile displays an envelope and the message "New Mail!" when an unread message has been received by the mail program. Tile **410** displays a name, "FM 101", denoting the title of a broadcast signal, in this case audio, that is associated with the tile. Tile **412** displays a "thumbnail" of the document viewed in a window such as **340**. A "thumbnail", as used herein, is a miniaturized representation of an image that retains sufficient characteristics to permit easy recognition of the image. For example, if the document displayed in a window were a multipage document, tile **412** may display a thumbnail of the first page of the document.

Tiles are selectable and live. When a tile is selected, whether by mouse click or otherwise, the tile instantly provides the user with access to the underlying information, whether that data be a hierarchical menuing system leading the user to a different level or tiles, a word processing file stored on a local area network, a spreadsheet stored locally on a user's computer, HTML file on the Internet, or a television signal. The tiles are live in that each contains real-time or near real-time information.

In a preferred embodiment a selection operation is associated with a tile. For example, clicking on a tile will cause it to immediately refresh its contents. Selecting tile **402** causes the most recent frame of the video stream to be displayed by the tile, or, if the picture were obtained from a static graphic file, causes the most recent version of the file to be displayed by the tile. Selecting tile **404** or tile **412** causes the most recent version of the document to be displayed.

In a preferred embodiment, double-clicking a tile causes that tile to occupy a substantial fraction of the whole display area. In this embodiment, double clicking tile **402** or **412** causes the image to be expanded to fit the whole display area. In an alternate embodiment, selecting a tile causes it to occupy an area in the middle of the display that is larger in area than a single tile but does not occupy the full display. If tile **404** were double-clicked, as much of the document as could be displayed in the enlarged tile in regular font size becomes visible. Double-clicking tile **408** causes the mail-box window of the e-mail utility to be sufficiently enlarged to allow new messages to be selected and read. Double-clicking tile **410** causes the audio stream to become audible over the appropriate channel of the system.

A representative tile data structure **500** is shown in FIG. **5**. It is important to understand that the tile itself is an image that at any given instant is resident on the file system. This image is separate and distinct from the application program or file associated with the tile. The tile data structure **500** comprises two addresses: a tile address **502** that defines the location on the file system where the tile image is stored; and a target address **504** that is the location at which the file or application program associated with the tile can be found. Additionally, the tile data structure contains a name **506** that may be displayed on the tile in certain circumstances. Tiles of the present invention may be assigned at least seven functions, including but not limited to: an initialization function **508** that is responsible for establishing a connection with the target address **504**; a refresh function **510** that handles updates to the tile image stored at the tile address **502**; a screen-size function **512** that stores the dimensions of the display area filled by the tile upon receipt of a request; an alarm function **514** that permits the tile to display an alarm or warning when the application program associated with the tile encounters a designated event; an on mouseover function **518** and an on mouseout function **520** which control the behavior of the tile when a selection tool such as a mouse-controlled cursor is placed respectively on and off the tile; and a toolbar function **522** which may permit an array of special buttons to appear on or adjacent to the tile for the purposes of adjusting properties of the tile. In one embodiment, a tile is configured so that a right-click of a 2-or 3-button mouse while the cursor is over the tile would activate the tool-bar function. In a preferred embodiment, right-clicking on a tile can reveal a menu of options that enables the user to ascertain properties of the tile, such as the bandwidth it is consuming.

In one embodiment of the present invention, the tile is itself a document created in a markup language such as HTML or XML as shown in FIG. **6** and is suitable for display in a web-browser. In this embodiment, a tile occupies a position in a table defined with elements of mark-up language which will be familiar to one skilled in the art. Tile-specific attributes are introduced which control the way in which a web-browser displays the tile. In the example in FIG. **6**, the tile has a clickable map, i.e., separate areas of the tile produce separate results when clicked. Also, this tile has a toolbar, which in one embodiment may appear if the mouse is right-clicked when the cursor is over the tile.

In another embodiment of the present invention, tiles communicate with one another and have conditional content. That is, the content of one tile depends upon the content of another.

Grid Object

The arrangement, layout and independent functioning of the tiles on the display and exemplary software for their control is now described with respect to FIGS. **7–13**.

The overall hierarchy of a graphical user interface embodied by the present invention is summarized in FIG. **7**. The Grid **700** is the top level functionality to which application programs are subordinate. The grid can replace the functionality of a user's computer desktop and offers similar and additional features. Grid **700** comprises a matrix of tiles of which tiles **702**, **704**, **706**, **708** and **710** are representative. The user can control the grid in such a way that the tiles **702**, **704**, **706**, **708**, and **710** present simultaneous information content from a plurality of sources. The grid controls the layout and priorities of the tiles. Each tile is associated with a data stream or application program and allows a choice of displayed images. In particular, different tiles can be associated with different contents. For example, tile **702** is connected to a web-page viewer **712** such as a browser. Tile **704** is connected to a source of streaming video **714**, such as Real Player. Tile **706** is connected to an audio player **716** such as a CD-player program or a source of streaming audio such as Real Audio. Tile **708** is connected to a file viewer **718** such as a text-editor or a word-processing package. Tile **710** is associated with another grid object **720**, thereby permitting a "layering" of information hierarchies. In a preferred embodiment, a grid embodies a similar underlying data structure to a tile.

Each tile is separately associated with a source of information, for example, an application program, datastream or file, any one of which may be another grid object. Such a hierarchical structure permits a user to organize programs and information through the graphical user interface. For example, separate categories of information can be displayed on separate grids allowing each grid to be associated with a theme.

By using the native attributes of a tile, a user may specify a presentation of the grid, consisting of its dimensions, (i.e., the number of tiles to display and their arrangement), and the programs or files to be associated with each tile. A single grid, composed of multiple tiles, may therefore present a number of information sources simultaneously.

Together, the grid and tiles comprise the application through which a user can view simultaneously information from a multitude of his available sources including multiple sites on the Internet, receive signals from multiple broadcast channels, and open and view multiple files. In its initial embodiment, the application may be run through conventional computer operating systems, whereupon it overlays the user's desktop and acts as if it were a "borderless browser". Therefore the application resides over existing applications without replacing any of them; rather it enables them to be called from the grid itself. The application, therefore, becomes a graphical file manager in which the content of continuously changing files, i.e., datastreams, is being displayed in real-time or near real-time, depending on the assigned priority. Effectively, the application replaces the user's desktop with a more visually intuitive dynamic menuing system.

In a preferred embodiment, a grid of tiles replaces the functionality of the computer "desktop" utilized by many modern computer operating systems. Whereas a desktop is typically populated by static icons and tool bars, a grid of tiles instead presents to the user an array of snapshots of current programs and files. The essence of the grid is that its content is dynamic and informnative. As previously discussed, icons are inherently limited in the information that they can present and windows clutter the entire desktop. By contrast, each tile on the grid can show the current status of the data or datastream associated with it. The fact that a tile may refer to a separate grid permits nesting of grids and consequently a hierarchy of organized information sources.

The grid also understands the interests of the user and acts as a repository for passwords and identifiers to subscription services. In this way, it is not necessary for a user to remember and enter a user name and password to access data requiring such a log-in. In this same vein, Internet sites of interest can be "bookmarked" and stored by the grid, each such site possessing its own tile. The grid is also nestable in that a tile in one grid may point to a separate grid and tiles in the separate grid may point back to the first grid or to yet more grids. If desired, a user can impose a "theme" on a grid and thereby categorize, group, and/or otherwise manage his data sources. In this manner, the user can group tiles relating to particular subject matters, Internet sites, documents, or otherwise in a grid according to some speciality. A tile in such a grid could link to another grid to provide a connection between related categories. Equally, a tile on more than one grid can point to the same information source.

In a preferred embodiment, the grid permits a regular layout of tiles on the display screen such that the tiles are uniform in size and shape, as depicted in FIGS. **8**–**11**. Each tile is indexed by its position on the grid. For example **802-2-1** is the first tile in the second row. Tiles in the first row of the grid are **802-1-1**, **802-1-2**, **802-1-3** and so on, to **802-1** Tiles on the second row are **802-2-1**, **802-2-2**, **802-2-3** and so on, to **802-2**-N. And, tiles on the bottom row are **802**-M-**1**, **802**-M-**2**, **802**-M-**3** and so on to **802**-M-N. There are no gaps between the tiles, the tiles are not permitted to overlap and the whole grid is covered by tiles. FIG. **8** shows one embodiment in which all tiles are the same size and are presented in an array comprising M rows and N columns. There is no particular requirement that the arrangement consists of more than one row and more than one column. On the display of a mobile telephone or smart phone, for example, a single row of tiles may be apposite.

FIG. **9** shows an arrangement in which there is a unit tile size, that of tile **802-1-1**, but tile **802-1-2** and tile **802**-N-**1** have each been configured to occupy regions of the grid equal to exact multiples of the unit tile size. Such an arrangement may be useful and important if one or more datastreams is of particular interest but the others are also to be monitored at the same time.

FIG. **10** shows an arrangement of tiles in which Tile **802**-M-**1** is associated with a further grid **1000**. The lower half of the figure shows an enlarged perspective of that tile showing a grid with Y columns and X rows.

FIG. **11** shows an arrangement of tiles in which are depicted different application programs associated with three of the tiles. Tile **802-2-2** links to a file viewer displaying a specific file; tile **802**-N-**1** presents streaming video; Tile **802**-M-N depicts a page of information on the world wide web.

FIG. **12** shows a schematic data structure of the attributes of one embodiment of grid object **700**. The architecture shown in FIG. **12** applies to any grid, including a top-level grid **700** shown in FIG. **7** as well as to a grid that is contained within a tile.

Significantly, the grid manages the flow of information to the tiles. For example, the grid can communicate with the display device in order to determine its current configuration and allocation of resources. In one embodiment the grid continually cycles around the currently displayed tiles, one by one, refreshing the content of a tile each time it is accessed. When a given tile is refreshed, the refresh operation is completed before refreshing the next tile in sequence. In this way, the cycling rate may be set so that the current content of all tiles are reasonably up to date. The cycling can be interrupted by a user selecting a given tile, so that that tile alone becomes continuously updated. In this way, the user does not need to worry about manually refreshing multiple tiles.

In a preferred embodiment, according to priorities that may be applied to individual tiles on a tile by tile basis if desired, the grid manages the refresh rate of each tile in the grid. For example, for locally stored word processing or spread sheet files, the user might configure the tiles to refresh only when the underlying data is written to the local hard drive. Similarly, a user might configure tiles containing infrequently updated HTML data from the Internet to refresh at a certain time each day. At the other extreme, a user might configure an active tile to display a television channel at a refresh rate of 29 frames per second, while at the same time configuring inactive tiles to display different channels at a refresh rate of once every five seconds. In this way, a user could monitor many channels until program content of interest appeared in one of the tiles without the burden of actively refreshing each tile.

The grid itself has an address **1204** that specifies its location within the file system of the device in which the

application program program runs. The grid has associated with it several utility programs: a configuration wizard **1206** that may be called by the user when setting up a new grid; a tile creation function **1208** utilized by the configuration wizard when initializing new tiles; a tile annihilation function **1210** utilized in case of error or when resizing the grid.

The grid object stores the number of rows **1212** and the number of columns **1214** of tiles that are present. The grid also stores a tile list **1216** containing attributes of each respective tile. In particular, the address of each tile, its priority and its refresh rate are stored by the grid program. The grid also stores other attributes of tiles such as their respective positions on the grid as given by their column and row number. The priority of a tile may be used to determine its refresh rate in one embodiment of the present invention. A tile can have a password feature built into it if it is desired to restrict access to the tile's content. The grid itself can have a toolbar by which its attributes may be accessed and modified.

In a preferred embodiment, a grid is a special form of a tile. It is a tile that can create and manage an array of other tiles. Accordingly, its data structure also comprises those elements of a tile data structure shown in FIG. **5** in addition to those shown in FIG. **12**. If the grid has a parent grid, the address of the parent grid **1202** is stored. For example, grid **1000**, associated with tile **802**-M-**1** of FIG. **10**, has grid **700** as its parent.

The grid can be configured to contain any number of tiles from one to as many as can reasonably fit on the user's display.

In one embodiment of the present invention, the grid is a document created in a markup language such as HTML, SGML or XML, FIG. **13** and is therefore suitable for display via a web-browser. In this embodiment, the addresses of the parent grid, the grid itself and each of the tiles are expressed as a Universal Resource Locator (URL). The various functions controlled by the grid are accessible through function calls devised according to methods familiar to one skilled in the art. For example, "dynamic HTML", java applets or simple CGI-scripts could provide the technological basis for enabling various grid utilities.

The application may be downloaded from a predetermined web-site and operates in a client-server mode. Users may download preconfigured grids from the predetermined server. A grid configuration "wizard" program which guides a user through a step by step set up of a custom-grid may also be downloaded. Other web hosts are able to deliver content to end-users via the predetermined server. Some basic functions of the grid can be carried out on the predetermined server and provided to the user.

Grid Configuration Wizard

In one embodiment of the present invention, the set up of a particular grid is achieved through a grid configuration program ("wizard") that is downloaded to the display device from a remote site. The grid configuration program permits a user to define and install one or more grids on the client system. When a tile is partitioned into a further array of tiles, the grid configuration program can also be used. One embodiment of the user interface of the grid configuration wizard is shown in FIG. **14**.

A first screen displayed by the grid configuration wizard comprises an application program logo **1404**, button **1406** to guide the user to the next screen and a number of choices, such as **1408**. The user is offered the choice of preconfigured, or "standard" grid configurations, selected from a list. Examples of such grids include grids themed by content such as sport-related grids or by type of data such as grids whose content is video-based.

Additionally, the user is permitted to configure "customized" grids in which each tile can be taken from a list of predefined samples or can be initialized according to the user's wishes. In a second screen **1412** displayed by the grid configuration wizard, a tiled area **1416** represents the grid that the user is building. Sample tile categories **1418** such as "weather", "news", "stocks", or "sports" are listed. In an alternate embodiment, a grid can be filled by the "drag and drop" technique in which a selected document **1414** is moved on to the display area of the grid configuration program and automatically becomes a tile. A button **1410** offers the user the chance to go back one screen.

In a third screen **1420** displayed by the grid configuration wizard, the user can name the grid and, optionally, store it for future reference, for example in an archive of preferred grids. The user can elect to finish grid construction by clicking the "Finish" button **1412**, or launch the grid immediately by activating button **1422**. When launching the grid immediately, the grid is automatically constructed on the fly according to the content and tile types specified by the user during the set up procedure.

Architecture of Application Program Software

The hierarchy of the software in a preferred embodiment of the present invention is illustrated in FIG. **15**. The software comprises a number of modules. In FIG. **15**, an arrow connecting two modules means that one module uses an interface of the other. The arrow comes from the module invoking the interface towards the module whose interface is being invoked. An interface may simply be a function call between the two modules or, for example, a call to a dynamic linked library (DLL).

The Surfcast application program **1500** takes its underlying data from two sources, metabase **1506** and a system library **1514** that resides on the device on which the application program is running. For example, the application program **1500** may be required to call functions from the system library while it is running. Actual tiles that a user visualizes can be spawned from the metabase **1506**.

Data structures for user tiles **1502** are obtained from the XP core **1504** which itself also utilizes components from the system library **1514**. The XP core is an abstraction layer for the operating system environment. Tiles that utilize components such as buttons take these components from the widget set **1508**. A widget is a basic user interface element such as a button or a text input box. The metabase also uses an interface of the widget set **1508**, and can therefore use functions within the widget set. The widget set requests functions from the XP core.

Objects in the metabase **1506** that retrieve content from remote sources such as world wide web pages utilize a connection manager and bandwidth controller **1512**. A URL loader **1510** decides whether content should be obtained afresh by contacting the connection manager **1512**, or from content previously stored in cache. Effectively, the URL loader manages the connection manager, and calls functions within it.

Underlying all of the application program's operations are functions from the operating system library **1516** that is supplied with the device on which the application program is running.

Each of the objects shown in FIG. **15** is now described in further detail by reference to FIGS. **16–21**.

The Surfcast application program **1500**, in FIG. **16**, comprises a launcher **1618** and a framework **1620**. The launcher opens the program from scratch whereas the framework is responsible for managing grids and tiles. The user interacts directly with the framework to set up a preferred arrangement of tiles on the display. In one embodiment, the framework initially contains a prescribed set of tiles. The framework controls communication between tiles, for example, in the case of conditional content.

Tiles **1502**, FIG. **16**, are the equivalent of an application in a conventional GUI system. They can be built in C++ using the Surfcast tile builder application program interface (API) using XP core classes, or via a utility such as a custom tile editor or via a script file. Some predefined tiles are included with the basic Surfcast system including a web browser tile called a surftile **1602**, tiles for contacts and communications such as a chat tile **1604** and an e-mail tile **1608**. Media-player tiles such as a video tile **1606** are also supplied, as are tiles that interface to commonly used desktop programs. A word tile **1610** interfaces to a word processor; excel tile **1612** interfaces to a spreadsheet program. A general content viewer that can compose pieces of content clipped from a variety of sources, layout tile **1616**, is also provided. Reg tile **1614** is a general purpose tile that permits a user to define his own tile type.

In a preferred embodiment, all tiles have a common base class, and each specialized type of tile has its own class that builds upon the base class. There are many ways in which specific tile classes can be derived from the conmmon base class. Functions for specific tile classes are readily apparent to one of skill in the art. Tiles may additionally be represented by markup language files and viewed within a web-browser environment.

The data classes in XP core **1504**, FIG. **16**, comprise base classes and utility classes with which tiles and widgets are built. In general, classes within the XP core describe how tiles can communicate with one another and with the overall application program framework **1620**. In particular, XP core classes are generic and portable, thereby permitting cross-platform capability.

XP core classes include: tilebase **1622** for the generic class that underlies all tiles; tile base view **1624**; tile controller **1626**; canvas **1628**; and classes for event handling **1630**. A view is what a tile uses to draw itself. Tile base view is the base class for all views associated with a visual object. A controller processes events, for example mouse moves, clicks, keyboard events and external events. Tile controller is the base class for controllers associated with a tile. A canvas is an area of screen on which to render some image, for example a tile.

The metabase **1506**, FIG. **17**, is a local store for platform-specific implementations of the descriptions of tiles, grids and other objects. Tiles, grids and content are created, saved and restored via the metabase. The metabase contains tile type and content type registries such as tile registry **1732**, and a local database of grids and content such as content store **1734** and grid store **1736**. Unknown tile and content types can be obtained from remote servers. Tile types are abstracted so that if a grid contains a particular type of tile, for example an e-mail tile, the metabase provides whatever is appropriate for the device the application is running on. Items in the metabase are "persistent", that is they are not saved explicitly but are preserved from session to session.

The widget set **1508**, FIG. **17**, comprises a platform-specific set of visual components that tiles can use. Widget set contains the predefined widgets that are included with the system. It can be extended with new widgets. It includes such useful widgets as a button **1738**, a label **1740**, an edit widget **1742** that enables a user to enter text into an editable field and a list widget **1744** that enables a user to select from a set of options. Items within the widget set can be used with tile types such as text input tiles, web browser tiles, and a streaming video tile. The term widget can also include more complex objects such as a video player that can be inserted into a tile as easily as a button.

The URL loader **1510**, FIG. **17**, provides a mechanism for retrieving content. The URL loader **1510** interacts with connection manager **1512** for tiles which need to make a network connection. Tiles and the metabase ask for content for a given URL and the content manager will attempt to retrieve it. The metabase also contacts the connection manager through the URL loader to ascertain whether there is sufficient bandwidth for the transfer. In particular, the connection manager decides whether the URL loader should furnish tile content from the cache **1746**, as would be the case if the content has been recently displayed and stored locally. Alternatively, if the content is not cached, the URL loader supervises loading of content from the location specified by the URL.

The URL loader also comprises a file manager **1748** for organizing the cached content. The URL loader additionally comprises a DOM (data object model) renderer **1750** that administers the parsing of pages in markup languages such as XML and HTML. The URL loader may also comprise an implementation of an API for XML rendering such as SAX. In an alternate embodiment, such an API may reside in the XP core module.

The system library **1514** comprises commonly used utilities within the application program, including, but not limited to, code for string manipulations, file handling and server communication. The system library module comprises generic code and can be compiled for any operating system.

The operating system library **1516**, FIG. **17**, comprises utilities that differ in their implementation from system to system but are needed for operation of the application program. For example, utilities that may be found in system library **1516** are those that provide support for threads and synchronization **1752**, debugging tools **1754**, graphics libraries **1756**, further basic string manipulations **1760** and connections **1762**. Additionally, not shown in FIG. **17**, useful items in the operating system library include utilities that permit definitions of objects, sockets, input devices and hardware devices. Items in the operating system library are accessible through classes with documented public interfaces.

The operation of the widget set **1508** is further described with respect to FIG. **18**. As previously mentioned, the widget set contains widgets for various functions such as buttons, text labels, etc. Illustrated in FIG. **18** is a set of widgets for buttons.

FIG. **18** shows the class hierarchy for the button widget. Base classes for widgets are grouped together in box **1809**. Widget class **1810** is a container for other classes. All widgets use the base class widget **1810** stored in the XP core module and further described later. Accordingly, button **1800** is a specific class inherited from widget **1810**.

Widget view **1812** is a class, also stored in XP core, that defines the look and feel of the widget. Button view **1802** inherits from widget view and controls how a button draws itself.

In the scheme of FIG. **18**, user tile **1816** comprises three objects, tile controller **1626**, the base class tile **1622** and tile

base view **1624**, each of which is found in XP core and is further described later. Tile base view is responsible for drawing the tile and can employ one or more widgets.

A button is something that a user can click on. A button provides button events to a button event consumer. A button event consumer is also known as a client, i.e., clients that use buttons implement button event consumer **1808** to be notified of button events. For example, a button event consumer may be a "play" function in a video tile. The button event consumer interacts with a control structure tile controller **1626** associated with a user tile **1816** by telling the tile that the button has been activated. Button event consumer **1808** is itself a class that inherits from an event consumer class, described later.

Button controller **1804** controls how button events **1806** are processed, for example mouse and keyboard events. It inherits class structure from widget controller **1814** stored in XP core. Not all button events are recognized by the button controller: for example, a particular key-stroke may have no effect on the state of the button.

Other widgets follow a similar pattern. They include: textedit, for inputting text; textlabel, for displaying text; textspinner, for selecting from a choice of options; datewidget, for entering a date; list, for selecting from a choice of options; titlebar; and a toolbar.

Metabase **1506** is further described with respect to FIG. **19**. Arrows between the components in FIG. **19** denote interfaces. The metabase comprises a registry **1900** and store **1902** of tile and grid types, a content store **1918** and a content and tile link database **1920**.

Content store **1918** is a cache that contains content of tiles for the previous session. Content tile link database **1920** copes with descriptions of relationships between tiles and also themes of content for related tiles. This database can also be used in the context of "knowledge management", i.e., those operations that monitor a user's activities and attempt to suggest further sources of content based on it. Both content store **1918** and the database **1920** interface with tile type registry **1900**.

The tile type registry **1900** contains a list of tile and widget types along with information about how to create them and what they are called, along with other information such as pointers to objects from which tiles are created. The tile and grid store **1902** contains a library of stored grids and tiles. Tiles can save themselves or be restored. In a preferred embodiment, grids are just special cases of tiles. Tiles from the tile library can be called and displayed on the screen by asking the registry to load tiles. The tile and grid store interfaces to an XML library **1906**.

Tiles from the tile and grid store can also be saved outside the metabase in a library of markup language files, e.g., an XML library **1906**.

Also in the metabase is metabase tile **1904** which utilizes tile base **1622** from the XP core module. All tiles inherit from this class.

DLLs can contain additional tiles and widgets that can be created by independent third parties. These can be implemented within the metabase through the tile factory **1916** and tile creator **1914**, both of which interface to the tile type registry **1900**. The tile factory **1916** contains the description and classes necessary for someone to register a new tile type. Tile creator **1914** is the code that does the tile creation at runtime. In general, independent creation of tiles is facilitated by supplying a tile toolkit to third parties.

Inquiry utility **1912** is an optional means for an outside user to interface to the metabase, for example to ascertain the class structures of stored tile classes.

The content store **1918** follows a similar pattern to the tile type registry and the tile store. The content and tile link database **1920** is a database of information about how tiles and grids are related, and how content is related between them.

FIG. **20** shows a further description of classes found in the XP core and their interaction with the operating system library **1516**. As discussed below, some arrows between objects within XP core denote inheritance of classes. Canvas **1628** describes an area of screen that can be drawn to.

GfxContext **2002** is a set of graphics primitives, for example for line-drawing, colors and space filling. It is a generic version that encapsulates and abstracts operating system-specific features inherited from GfxContextFactory **2032** in the operating system library **1516**. Win32 GfxContext **2034** is an example of a graphics context used with the Windows operating system. Other GfxContent **2036** includes alternative platform dependent graphics contexts.

The foundation classes are tile base **1622**, tile base view **1624** and tile base controller **2008**. Tilebase **1622** is the base class for all visual objects such as tiles, widgets and grids. The tile class **2010**, and widget base class **2016**, inherit from tile base. A widget effectively functions as a special kind of tile that can be placed inside a tile. Widget base **2016** is not meant to be instantiated on its own but is a foundation for the widget class **1810**, FIG. **18**, used by a generic widget.

Tile base view **1624** is the base class for all views associated with a visual object. A view is what a tile uses to draw itself. Also inheriting from tile base view is tile view **2012**, the base class for all views associated with tiles and widgetview **1812**, the base class for all views associated with widgets. Tile base view and tile base interface with canvas **1628**.

Tile base controller **2008** is the base class for all controllers associated with a visual object. Inheriting from tile base controller are tile controller **1626**, the base class for controllers associated with a tile and widget controller **2020**, the base class for all controllers associated with widgets. A controller processes all events. Tile base interfaces with both tile base view **1624** and tile base controller **2008**. Tile base controller interfaces to event system **2022**. Finally, event system **2022** communicates between the operating system library **1516** and the tile box controller **2008**.

Event system **2022** is further described with respect to FIG. **21**. An event can be any one of a mouse movement event, another mouse event such as a mouse-click, or a keyboard event such as a keystroke. In FIG. **21**, event **2112** is the base class. Other classes such as mouse movement event **2106**, mouse event **2108** and keyboard event **2110** derive from the base class by inheritance. The event consumer **2104** is a class responsible for directing events to the controller. The event producer **2102** is interpreting system events into Surfcast events for an event consumer. The boxes **2122**, **2124**, **2126**, **2128**, **2130** and **2132** are multiplexes handling the case where multiple clients are affected by multiple types of events. An event is communicated to tile base controller **2008**.

Managing Connections to More than One Datastream

When two or more tiles connect to sources of data available over a network, communication must be established in such a way that the rate at which updated data is transmitted to the grid can be controlled. In practice, for an embodiment of the application which resides on a user's computer, a flow control protocol such as TCP is required.

In this way, each tile can communicate with the remote datastream to which it is linked and a determination can be made of available bandwidth at the time of data transfer. Alternatively, in a client-server mode, flow control is not necessary because communication with the server suffices, as is described below.

It is not practical to fire up a separate browser program from each tile that wishes to download data from a site on the world wide web. A web-browser is very greedy on memory and resources and the user would have little or no control over the respective rates at which data was downloaded from different sites.

Instead, in a preferred embodiment of the present invention, a hierarchy of layers manages the simultaneous connection and allocation of resources to different world wide web sites, as shown in FIG. **22**. The layer structure applies to the way in which any given tile downloads content.

At the highest level there exists a widget, referred to as "Surf widget" **2200**, which is the basic browser control within the application program of the present invention. Ideally, this widget will operate in conjunction with any commonly used world wide web browser. It will typically be associated with a tile type such as surftile **1602**.

The surf widget communicates with a surf widget controller **2202** in a control layer **2201**. Also in the control layer is a web browser application program **2204**. Examples of such a program include Microsoft's Internet Explorer and Netscape's Navigator software. The surf widget controller **2202** handles the interaction between the surf widget **2200** and the web-browser **2204**. The surf widget controller also passes on requests from the browser to the URL Manager **2206** in the next layer, the URL layer **2205**. The surf widget controller then pipes back the results to be rendered to surf widget. A typical example of this process in operation would be: a user clicks on a hyper-link in a web-page; the web-browser makes a request for that page to surf widget controller **2202**; the request gets handed to the URL manager **2206**; once the page is loaded, the URL manager **2206** notifies the surf widget controller, which in turn sends the information to the web-browser for rendering.

The responsibility for obtaining pages of content is that of the URL layer **2205**. When a URL is requested, the URL manager **2206** issues a request for the page and any subsequent media to the connection manager **2210**. The URL manager keeps track of the requested URL for future use, if it is requested again. The URL manager also queues up URL's that have been requested according to their focus, i.e., the tile that a user has currently selected and according to the respective priorities of the active tiles.

In a preferred embodiment, a pre-fetch utility such as URL pre-fetch manager **2208** can be implemented. It saves the user time if items can be pre-fetched instead of waiting for their download. Several strategies can be used to obtain pre-fetch items for the user. Using a history of a user's previous browsing habits, it is possible to predict what the user will probably want next. Another function of a pre-fetch utility is to periodically check the validity of items in the cache and to make sure they are up to date. As would be familiar to one skilled in the art, some of the new HTTP1.1 methods would prove very useful for this; namely the conditional gets. Another strategy is to start loading links from the page that a user is browsing, regardless of whether the user has selected the links. Although such an approach could be very wasteful of resources if there are a lot of links and very few are ultimately accessed and also because a lot of links tend to be advertisers, in situations where very high capacity bandwidth exists, this approach could be effective.

The connection layer **2209** handles each individual request for download passed to it through the URL manager, regardless of whether it is an HTML page, a graphic or sound file. The connection manager **2210** understands the total bandwidth available for allocation, for example, whether the device is connected to a modem or a T-1 line. It will also manage the connection to the requested site and maintain its own cache. Before making a network request for an item, connection manager **2210** first checks its cache, the connection manager cache **2212**. If the item is not in the cache, the connection manager then passes the request off to the HTTP protocol socket **2214** in the protocol layer **2215**. The way in which HTTP protocols and caches work is familiar to one skilled in the art.

The protocol layer **2215** consists of a suite of different socket types, **2214**, **2216** and **2218**, intended to support different communication protocols, such as HTTP, FTP and also a client server protocol specific to the application program via the surfcast protocol socket **2218**.

The socket layer **2219** comprises at least one socket **2220**. The socket layer wraps up all the system implementation specifics for a given platform and allows generic socket types us to be built on top. The socket keeps track of its bandwidth usage, which can then be queried at the connection layer. The socket layer then facilitates bandwidth management.

With all communications going through the same socket layer it is possible to easily collect data about a socket's bandwidth usage. If, at the connection layer, it is noticed that the total bandwidth allocation has been exceeded, it is a simple case of blocking further data transfer until such time as total bandwidth usage falls back under what has been allocated.

As a user switches focus from one tile to another priorities can be dynamically re-allocated to ensure the fastest possible loading of the selected page. All other communications can then abide by the same rules, allowing for complete control.

The sequence of events and functions in a "dynamic bandwidth allocation" feature of the present invention are described as follows. The dynamic bandwidth allocation feature involves the URL loader, the connection manager and the bandwidth controller.

The tiles that need access to the network resource for downloading content from a URL, pass certain parameters to the URL loader which manages all such requests from the tiles. These parameters include the URL itself, the priority of the tile, the minimum bandwidth requirement if any, and the maximum bandwidth requirement, if any.

The URL loader detects the need for a connection to a network resource, as would be notified to it by the connection manager. In the case of dial-up connections, the connection manager is responsible for allocating the modem resource and making the dial-up. Once a connection is made and the network resource is available, the URL loader requests the bandwidth controller to start delivering the required content, taking into account the additional parameters for each request.

The bandwidth controller **2300** is an object that comprises a number of functions, as shown in FIG. **23**. AddURL **2302** is a function used by the URL loader to add an additional connection request to those already considered. RemoveURL **2304** is used by URL loader when cancelling or aborting a request. GetURLStatus **2306** is used by URL

loader to obtain a status report for a given request. GetStatus **2308** is used to obtain a general status report for the overall bandwidth. The bandwidth controller **2300** is additionally able to execute a main cycle loop over the outstanding URL requests for the purposes of managing the bandwidth among them. The following pseudocode describes steps within the main cycle loop, according to one embodiment of the present invention.

```
while (uncompleted requests outstanding)
{
  calculate bandwidth obtained per request;
  check for need to postpone, stall or cancel lower priority requests;
  check for need to increase higher priority requests;
  detect completed requests and notify requestor;
  detect undeliverable requests and reissue or cancel if necessary;
  carry out other service and statistics functions, as required;
}
```

Each of these steps is explained, as follows. One or more of the steps may be performed in a different order from that presented above without departing from the scope of the present invention.

The step of calculating the bandwidth obtained per request utilizes a function that calculates obtained bandwidth for each of the managed requests, including requests that are stalled (or postponed) due to priority issues. This calculation takes place frequently because of the nature of the network. The bandwidth obtained can vary drastically even during the course of the individual network transaction, and therefore a priority based dynamic system must continuously accommodate such fluctuations. The result of calculating the bandwidth obtained is used both for feedback to users and for making decisions in the subsequent steps within the main cycle loop.

The step of checking for the need to postpone, stall or cancel lower priority requests is another precautionary mechanism to use for the purposes of adjusting the currently active connections. If outstanding requests are not achieving the desired minimum bandwidth, or an actual bandwidth in line with the priority of a given request is not achieved, bandwidth must be made available to the higher priority requests, by stalling, cancelling or postponing lower priority requests. A throttle feature implemented consistent with the layer nature of the stack can be applied wherein the frequency of issuing requests can be decreased. A complete cancellation of a request followed by reload from cache is usually the last resort.

The step of checking for the need to increase higher priority requests has the opposite effect. If applied, higher priority requests are increased by means of spawning additional simultaneous requests, or by increasing the throttle mentioned above.

Both the steps of checking the need to postpone and checking the need to increase a priority can provide feedback to the user in terms of their success or failure. Status parameters can additionally be collected and calculated.

The step of detecting completed requests and notifying the requestor utilizes a function for handling successful completed requests. Conversely, the step of detecting undeliverable requests followed by reissuing or, canceling the request if necessary is the mechanism for avoiding undeliverable requests, or retrying temporarily unavailable requests.

Other service and statistics functions may also be called, as may be necessary for supplying information to the layers above the connection layer.

Client-Server Interaction

In one embodiment of the present invention, FIG. **24**, the user at client device **2400** interacts with server software on a server **2402**. The server stores locally a profile comprising user-specific content **2406** that can feed customized data to the user. For example, the user may store pre-defined grid configurations on the server. Additionally, passwords for specific web-sites can be stored along with the user's profile. A grid generator **2404** on the server creates a grid of tiles according to user-specified content. Each tile has been created on the server by producing an image from the location specified. For example, tile creator **2408-1** produces a tile from content **2410-1**. Thus, when a user logs on to the server, for example through a conventional web-browser, a grid of tiles is downloaded to the user's system.

The client-server embodiment provides a number of advantages. For example, individual users and the devices they use may be differentiated. Therefore, the tile-content that the server delivers can be customized according to the rendering device.

Turning next to FIG. **25**, each time a user logs on to the server **2402**, a "session" is initiated, step **2500**. The server verifies the user's identity, step **2502** and acknowledges the log-in, step **2506**. The client registers one or more resources, such as connection bandwidth, cost per transmission unit and properties of local playback device, step **2504**. From this information, the server identifies the client device type, for example, set-top box or personal computer, step **2508**. At step **2510**, the server retrieves grid settings specific to the user, if appropriate. Details of a session, as defined by tile content and priorities can be held over from one session to another, both for the purposes of permitting a user to continue with ongoing work and in order to protect against the adverse consequences of abnormal disconnections. Additionally, targeted advertising and messaging can be delivered to subsets of users via the predetermined server.

Having rendered a grid, step **2512**, and delivered it to the client device, the user can request datastreams, step **2518**. Any number of datastreams can be requested at once, the corresponding stream request information which defines parameters for each stream is communicated to the server.

Upon completion of these steps, the server knows the client characteristics and is able to distribute bandwidth available to the client among multiple content servers. In this example, if the client has an incoming bandwidth of say 56 Kbits/second, and is requesting datastreams from three sources with equal priority, then the server will respond for each request that a bandwidth of 56/3=18.7 Kbits/sec is available for each datastream.

The requested datastreams are displayed on the client device, step **2520** and, if the user changes the content of a tile or explicitly requests an update or refresh operation on the tile, step **2522**, an update request is sent to the server, step **2524**. Once the new content has been received, the grid is rendered anew, step **2526**.

Intensive operations on each displayed tile are also channeled through the predetermined server. For example, refresh operations on a tile generate a refresh request that is sent to the predetermined server. Similarly, requests to thumbnail a given image can be carried out, by request, on the predetermined server and the resulting compressed image transmitted to the user.

In the foregoing embodiment, the server component may reside locally on the client machine, in which case the server is known as the "Resource Manager", or it may be a remote server.

In a preferred embodiment of client server operation, shown in FIG. **26**, aspects of a user's grid profile are transmitted to third parties so that the third parties may then communicate tile based content directly to the user. For example, a user's custom grid may contain a tile that points to a third party web-site **2604**. Content **2606** from the 3rd party web-site is typically transferred to the server for dissemination to the user. The server **2602** notifies the 3rd party web-site that the user requires tiled data by, for example, transmitting user information **2608**. The third party then permits the tile based content of its web-site to be transmitted directly to the user.

The use of servers also allows for the latest versions of tiles to be downloaded and installed across all devices. Users are then able to share grids and tiles with other users. The server side technology utilized permits users of all client devices, from desktop PC's to mobile telephones with a consistent experience.

The majority of the server side code is written in Java, with C++ being used where necessary. Inter-server communication also utilizes XML to provide consistency with other aspects of the invention.

In a preferred embodiment, either Oracle 8i or SQL Server **2000** are used to provide a relational database (RDB) functionality of the server. Both of these RDB's now provide direct SQL to XML transformations. Databases are developed using the ANSI 92 SQL standard, which is usable by either of the RDB's.

Thin Client Technology

An object of the application program of the present invention is that it should operate on a variety of devices, including mobile telecommunications devices such as cellular phones, handheld web-browsers, palm pilots, personal digital assistants and other devices that can communicate by wireless application protocol (WAP).

Accordingly, because most handheld or mobile devices do not have the same amount of local storage and processing power as desktop computers and set-top boxes, a special version of the application program of the present invention is envisaged for mobile devices. The special version embodies so-called 'thin client' technology in which a lot of the operations are performed by a server instead of the device itself.

An "n-tier" architecture is one that is designed generically for a multitude of platforms, for example PC's, PDA's WAP phones and UNIX systems. Accordingly, in order to maximize the use of mobile devices, the application program of the present invention employs an n-tier architecture allowing the majority of the processing to be carried out on the server with the results being sent to the device for rendering. This model allows for a reduced size system to be stored on mobile devices, with the system logic residing on remote servers.

The features that are moved from client to server will be dependent upon the device in question. For example it is possible to provide the client with more features on a personal digital assistant such as a Palm pilot than on a WAP Phone.

In order to provide a level of consistency between the devices and the servers, the markup language XML is used to wrap the data that is being transmitted. As previously described, the system of the present invention uses a metabase to store information about the user's current grid and tile configurations. A synchronization procedure allows the metabase to be stored on a server and queried by any device. In this way it is possible to provide consistent grid and tile implementations independent of the device and its location.

FIG. **27** provides an example of the way in which wireless devices can interact with a server. A personal digital assistant (PDA) **2700** or a WAP phone **2702** communicates in a wireless manner with a dial-in bank **2704**. The dial-in bank communicates data to a server farm **2706** which is connected to the internet **2710**, optionally through a firewall **2708**. Alternatively, another personal digital assistant such as **2714** can communicate with an internet service provider such as **2712**, also connected to the internet **2710**. The server farm **2706** is able to provide content directly to a PDA such as **2700** or indirectly, over the internet, to a PDA such as **2714**.

What is claimed is:

1. A method executed by a device under the control of a program, said device including a memory for storing said program, said method comprising:

selecting a plurality of information sources;

partitioning a visual display of the device into an array of tiles, wherein each tile in said array of tiles is associated with an information source in said plurality of information sources;

assigning a first refresh rate to a first tile of said array of tiles and a second refresh rate to a second tile of said array of tiles;

updating information from a first information source in said plurality of information sources presented to said first tile in accordance with said first refresh rate; and

simultaneously

updating information from a second information source in said plurality of information sources presented to said second tile in accordance with said second refresh rate.

2. The method of claim **1** wherein said partitioning includes partitioning said array of tiles in accordance with a user-defined array size.

3. The method of claim **1** wherein said partitioning includes partitioning said array of tiles in a non-overlapping configuration wherein each tile of said array of tiles is a uniform size and shape.

4. The method of claim **1** wherein said assigning includes assigning said first refresh rate and said second refresh rate in accordance with a first priority value of a first information source associated with said first tile and a second priority value of a second information source associated with said second tile.

5. The method of claim **1** wherein said assigning includes attributing a selected state or an unselected state to said first tile and said second tile.

6. The method of claim **1** wherein said first refresh rate is different from said second refresh rate.

7. The method of claim **1** wherein at least one of said first refresh rate and said second refresh rate is specified by a user.

8. The method of claim **1** wherein said array comprises more than one row and more than one column.

9. The method of claim **1** wherein at least one attribute of each tile in said array of tiles is assigned uniformly.

10. The method of claim **9** wherein said attribute is a refresh rate.

11. The method of claim **1** wherein said first refresh rate is assigned automatically.

12. The method of claim **1** wherein said array comprises a grid wherein each of said tiles occupies a fixed position on said grid.

13. The method of claim **1** wherein a unit tile size is associated with said array of tiles, dependent upon a maxi-

mum number of tiles displayed vertically and a maximum number of tiles displayed horizontally, and wherein each tile in said array of tiles has a fixed size that is equal to said unit tile size, or a multiple thereof.

14. The method of claim **1** wherein said array is displayed in a web-browser.

15. The method of claim **1** additionally comprising storing said array of tiles on a second device.

16. The method of claim **1** wherein said array of tiles is retrieved from a second device.

17. The method of claim **1** wherein said device is a mobile telephone.

18. The method of claim **1** wherein said device is a television.

19. The method of claim **1** wherein said device is a computer.

20. The method of claim **1** wherein said device is a personal digital assistant.

21. The method of claim **1** wherein said plurality of information sources comprises at least two information sources selected from the group consisting of: analog signal; video signal; audio signal; text; an e-mail program; a world-wide-web page; streaming video; streaming audio; and graphics.

22. An electronic readable memory to direct an electronic device to function in a specified manner, comprising:

a first set of instructions to control simultaneous communication with a plurality of information sources;

a second set of instructions to arrange a display into an array of tiles;

a third set of instructions to associate a first information source of said plurality of information sources to a first tile of said array of tiles and a second information source of said plurality of information sources to a second tile of said array of tiles;

a fourth set of instructions to retrieve information from said first information source in accordance with a first retrieval rate and retrieve information from said second information source in accordance with a second retrieval rate; and

a fifth set of instructions to present information to said first tile in accordance with said first retrieval rate and present information to said second tile in accordance with said second retrieval rate.

23. The electronic readable memory of claim **22** further comprising a set of instructions to process a network datastream from a network data source.

24. The electronic readable memory of claim **22** further comprising a set of instructions to process a tuner signal from a tuner device.

25. The electronic readable memory of claim **22** wherein said second set of instructions arrange said array of tiles on a display of a mobile telephone.

26. The electronic readable memory of claim **22** wherein said second set of instructions arrange said array of tiles on a display of a television.

27. The electronic readable memory of claim **22** wherein said second set of instructions arrange said array of tiles on a display of a computer.

28. The electronic readable memory of claim **22** wherein said second set of instructions arrange said array of tiles on a personal digital assistant.

29. The electronic readable memory of claim **22** further comprising a set of instructions to assign a password to a selected tile of said array of tiles.

30. The electronic readable memory of claim **22** wherein said second set of instructions produce an array of non-overlapping tiles wherein each tile has a uniform size and shape.

31. The electronic readable memory of claim **22** wherein said fourth set of instructions assign said first retrieval rate and said second retrieval rate in accordance with a predetermined priority scheme.

32. The electronic readable memory of claim **22** further comprising a set of instructions to selectively assign a selected or unselected state to specified tiles of said array of tiles.

33. The electronic readable memory of claim **22** further comprising a set of instructions to interrupt said first retrieval rate and present said first tile with static information from said first information source.

34. The electronic readable memory of claim **22** further comprising a set of instructions to deliver selected textual content from said first information source to said first tile.

35. The electronic readable memory of claim **22** further comprising a set of instructions to deliver a video signal to a selected tile of said array of tiles.

36. The electronic readable memory of claim **22** further comprising a set of instructions to deliver a frame of a broadcast TV signal to a selected tile of said array of tiles.

37. The electronic readable memory of claim **22** further comprising a set of instructions to deliver information from a network document to a selected tile of said array of tiles.

38. The electronic readable memory of claim **22** further comprising a set of instructions to deliver a web page to a selected tile of said array of tiles.

39. The electronic readable memory of claim **22** wherein said first retrieval rate is different from said second retrieval rate.

40. The electronic readable memory of claim **22** wherein said array comprises more than one row and more than one column.

41. The electronic readable memory of claim **22** further comprising a set of instructions for uniformly assigning at least one attribute of each tile in said array of tiles.

42. The electronic readable memory of claim **41** wherein said attribute is a retrieval rate.

43. The electronic readable memory of claim **22** wherein said first retrieval rate is assigned automatically.

44. The electronic readable memory of claim **22** additionally comprising instructions for storing said array of tiles on a second electronic device.

45. The electronic readable memory of claim **22** additionally comprising instructions for retrieving said array of tiles from a second electronic device.

46. A system for facilitating the organization and management of multiple data sources, comprising:

a device that includes a processor configured to execute instructions, a memory connected to said processor to store at least one program that includes a graphical user interface, and an input device, wherein said processor executes instructions to:

control simultaneous communication with a plurality of information sources;

arrange a display into an array of tiles;

associate a first information source of said plurality of information sources to a first tile of said array of tiles and a second information source of said plurality of information sources to a second tile of said array of tiles;

retrieve information from said first information source in accordance with a first retrieval rate and retrieve information from said second information source in accordance with a second retrieval rate; and

present information to said first tile in accordance with said first retrieval rate and present information to said second tile in accordance with said second retrieval rate.

47. The system of claim **46** wherein said array comprises more than one row and more than one column.

48. The system of claim **46** wherein said processor additionally executes instructions for uniformly assigning at least one attribute of each tile in said array of tiles.

49. The system of claim **48** wherein said attribute is a retrieval rate.

50. The system of claim **46** wherein said first retrieval rate is assigned automatically.

51. The system of claim **46** wherein said processor additionally executes instructions for storing said array of tiles on a second device.

52. The system of claim **46** wherein said processor additionally executes instructions for retrieving said array of tiles from a second device.

* * * * *

UNITED STATES PATENT AND TRADEMARK OFFICE

CERTIFICATE OF CORRECTION

PATENT NO. : 6,724,403 B1
DATED : April 20, 2004
INVENTOR(S) : Ovid Santoro et al.

It is certified that error appears in the above-identified patent and that said Letters Patent is hereby corrected as shown below:

Title page,
Item [*] Notice, "Subject to any disclaimer, the term of this patent is extended or adjusted under 35 U.S.C. 154(b) by 471 days" should read -- Subject to any disclaimer, the term of this patent is extended or adjusted under 35 U.S.C. 154(b) by 379 days. --.

Signed and Sealed this

Twenty-ninth Day of November, 2005

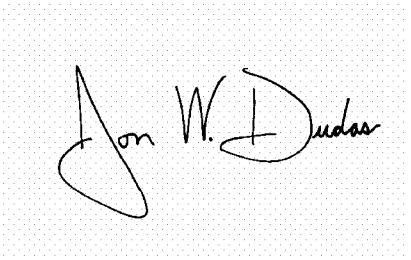

JON W. DUDAS
Director of the United States Patent and Trademark Office

UNITED STATES PATENT AND TRADEMARK OFFICE

CERTIFICATE OF CORRECTION

PATENT NO. : 6,724,403 B1
DATED : April 20, 2004
INVENTOR(S) : Ovid Santoro et al.

It is certified that error appears in the above-identified patent and that said Letters Patent is hereby corrected as shown below:

Title page,
Item [*] Notice, "Subject to any disclaimer, the term of this patent is extended or adjusted under 35 U.S.C. 154(b) by 259 days" should read -- Subject to any disclaimer, the term of this patent is extended or adjusted under 35 U.S.C. 154(b) by 379 days. --.

This certificate supersedes Certificate of Correction issued November 29, 2005.

Signed and Sealed this

Ninth Day of May, 2006

JON W. DUDAS
Director of the United States Patent and Trademark Office