[19] China National Intellectual Property Administration (CNIPA)

[51] Int. Cl[7]
E05D 3/06

[12] Specification for Utility Model Patent

[21] ZL Patent No.: 03261210.9

[45] Grant Announcement Date: July 21, 2004

[11] Grant Announcement number: CN 2627170Y

[22] Application Date: May 14, 2003 [21] Application No.: 03261210.9

[73] Patentee: Jianxing Electronic Technology Co., Ltd.
Address: Taipei City, Taiwan Province

[72] Designer: Lin Ruijiang

[74] Patent Agency Agent: Beijing Liushen Law Office
Chen Xiaowen; Li Xiaoshu

Claims: 2 Pages. Specification: 4 Pages. Drawings: 12 Pages.

[54] Title of the Utility Model: DOUBLE HINGE DEVICE

[57] Abstract

The present utility model provides a double hinge structure for an electronic product having a liftable cover (such as a notebook computer, a portable video player, a mobile phone, a personal digital assistant, or a digital camera having a liftable screen). The structure enables the electronic product having a liftable cover to be equipped with an advantageous 360-degree rotating function, which is a function that all existing electronic products having liftable covers (the general design enables a rotation by 180 degrees at most) are unable to achieve. Because of the 360-degree rotating function, these electronic products having liftable covers have the following advantages: the viewing angle is more adaptable; any surface may serve as a support, which provides the most space-saving viewing mode; and when a display screen is completely flipped to the other side (rotating by 360 degrees), a user may freely change the cover surface at any time and the key operating surface may still be used.

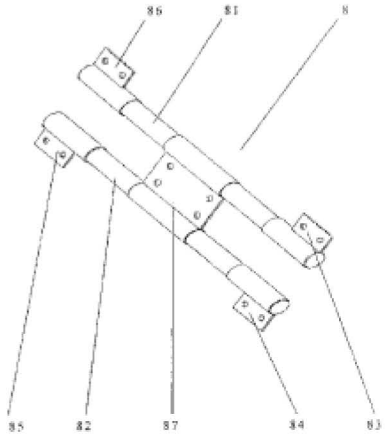

ISSN 1008-4274

Published by Intellectual Property Publishing House

1. A double hinge device, comprising: a fixing piece for fixing a double hinge structure; a plurality of pivoting pieces for connecting a display screen and an operating surface and rotating the same; and a plurality of pivots pivotally connected to the pivoting pieces and the fixing piece.

2. The double hinge device according to claim 1, wherein a number of the fixing pieces may be plural.

3. The double hinge device according to claim 2, wherein a number of the plural fixing pieces is two.

4. The double hinge device according to claim 1, wherein a number of the plural pivots is two.

5. The double hinge device according to claim 1, wherein a number of the plural pivoting pieces is two.

6. The dual hinge device according to claim 1, wherein a number of the plural pivoting pieces is three.

7. The double hinge device according to claim 1, wherein a number of the plural pivoting pieces is four.

8.The double hinge device according to claim 1, wherein the fixing piece is further provided with a plurality of locking holes for locking screws.

9.The double hinge device according to claim 1, wherein the pivoting pieces are further provided with a plurality of locking holes for locking screws.

10.The double hinge device according to claim 1, wherein a display screen of an electronic product having a liftable cover uses the double hinge structure to be pivotally connected to a body of the product in a rotatable manner; the display screen and an operating surface are equipped to rotate at a 360-degreeangle; the product is enabled to be viewed at various angles; and any surface of the product may serve as a support.

11. An electronic product having a liftable cove, comprising: a display screen for viewing; an operating surface for setting desired functions; and a double hinge structure respectively connected to the display screen and the operating surface, wherein the display screen and the operating surface are equipped to rotate at a 360-degree angle.

12. The electronic product having a liftable cove according to claim 11, wherein the double hinge structure comprises: a fixing piece for fixing a double hinge structure; a plurality of pivoting pieces for connecting the display screen and the operating surface and for rotating the same; and a plurality of pivots pivotally connected to the pivoting pieces and the fixing piece.

13. The electronic product having a liftable cover according to claim 12, wherein a number of the fixing pieces may be plural.

Petitioners - Exhibit 1018, page 2

14. The electronic product having a liftable cover according to claim 13, wherein a number of the plural fixing pieces is two.

15. The electronic product having a liftable cover according to claim 12, wherein a number of the plural pivots is two.

16. The electronic product having a liftable cover according to claim 12, wherein a number of the plural pivoting pieces is two.

17. The electronic product having a liftable cover according to claim 12, wherein a number of the plural pivoting pieces is three.

18. The electronic product having a liftable cover according to claim 12, wherein a number of the plural pivoting pieces is four.

19. The electronic product having a liftable cover according to claim 12, wherein the fixing piece and the pivoting pieces are further provided with a plurality of locking holes for locking screws.

20. The electronic product having a liftable cover according to claim 11, wherein the display screen is pivotally connected to a body of the product through the double hinge structure in a rotatable manner; the product is enabled to be viewed at various angles; and any surface of the product may serve as a support.

Petitioners - Exhibit 1018, page 3

DOUBLE HINGE DEVICE

TECHNICAL FIELD

The present utility model relates to a double hinge structure for an electronic product having a liftable cover (such as a notebook computer, a portable video player, a mobile phone, a personal digital assistant or a digital camera having a liftable screen).

BACKGROUND

Nowadays, the electronic products having liftable covers, such as laptops, portable video players, mobile phones, personal digital assistants, or digital cameras having liftable screens, use a hinge such that opening and closing positions formed between a product body and a display screen are made possible. As shown in FIG.1, a hinge used by existing electronic products having liftable covers is shown. As shown in FIG. 2 and FIG. 3, when the display screen and the product body form a closing position, the occupied space can be reduced, making it convenient to carry by users. As shown in FIG. 4, when the display screen is in an opened position, a user may make appropriate operations through buttons set on the product body, and desired results may be obtained or confirmed using the display screen. However, looking at existing general electronic products having liftable covers, the design thereof may offer a rotation at 180 degrees at most. Referring to FIG. 5 and FIG. 6, for users, there are still limitations to some degrees . Therefore, the present utility model provides a double hinge structure that enables a rotation at 360 degrees, which can be applied to the existing general electronic products having liftable covers, thereby bringing these products more variable functions with the space more effectively used.

SUMMARY

An objective of the present utility model is to provide a double hinge structure that enables a rotation at 360 degrees, which enables the related electronic products having liftable covers to be equipped with more variable functions with the space more effectively used.

The objective of the present utility model is achieved as follows: a double hinge device is provided, comprising a fixing piece for fixing a double hinge structure; a plurality of pivoting pieces for connecting a display screen and an operating surface and rotating the same ; and a plurality of pivots pivotally connected to the pivoting pieces and the fixing piece.

The present utility model further provides an electronic product having a liftable cover, comprising: a display screen for viewing; an operating surface for setting desired functions; and a double hinge structure respectively connected to the display screen and the operating surface, wherein the display screen and the operating surface are equipped to rotate at a 360-degree angle.

Petitioners - Exhibit 1018, page 4

According to the double hinge structure for the electronic products having liftable covers provided by the present utility model, the present utility model enables a rotation at 360 degrees, thus breaking the limitation of and differs from the current electronic products having liftable covers in which only a 180-degree rotation at most is possible. When a display screen of an electronic product having a liftable cover is pivotally connected to the product body using the double hinge structure provided by the present utility model, the display screen is equipped with the function of rotating by 360 degrees, thus making the product having the following the advantages: the viewing angle is more adaptable; any surface may serve as a support, which provides the most space-saving viewing mode; and when it is completely flipped to the other side (rotating by 360 degrees), a user may freely change the cover surface at any time and the key operating surface may still be used.

BRIEF DESCRIPTION OF DRAWINGS

FIG. 1 is a three-dimensional diagram of a hinge used by existing electronic products having liftable covers;

FIG. 2 is a three-dimensional diagram when an electronic product having a liftable cover using the existing hinge is in a closed position;

FIG. 3 is a side view when an electronic product having a liftable cover using the existing hinge is in a closed position;

FIG. 4 is a three-dimensional diagram when an electronic product having a liftable cover using the existing hinge is in an opened position;

FIG. 5 is a side view when an electronic product having a liftable cover using the existing hinge is in an opened position at 180 degrees;

FIG. 6 is a side view when an electronic product having a liftable cover using the existing hinge is in an opened position at 180 degrees;

FIG. 7 is a three-dimensional diagram of one of double hinge structures provided by the present utility model;

FIG. 8 shows a schematic plane view and side view of mounting portions and a hinge shell;

FIG. 9 is a schematic side view of a display screen and an operating surface in a folded position;

FIG. 10 is a schematic side view when a display screen is unfolded by 180 degrees;

FIG. 11 is another schematic side view when a display screen is unfolded by 180 degrees;

FIG. 12 is a schematic side view when a display screen is unfolded by 360 degrees;

FIG. 13 is a three-dimensional diagram of an electronic product having a liftable cover using the double hinge structure in FIG. 7;

FIG. 14 is a three-dimensional diagram showing another mode of the double hinge structure according to the present utility model;

FIG. 15 is a three-dimensional diagram of an electronic product having a liftable cover using the double hinge structure in FIG. 14;

FIG. 16 is a three-dimensional diagram showing another mode of the double hinge structure according to the present utility model;

FIG. 17 is a three-dimensional diagram of an electronic product having a liftable cover using the double hinge structure in FIG. 16;

FIG. 18 is a schematic three-dimensional diagram of one viewing angle of an electronic product having a liftable cover using the double hinge structure according to the present utility model;

FIG. 19 is a schematic three-dimensional diagram of one viewing angle of an electronic product having a liftable cover using the double hinge structure according to the present utility model;

Petitioners - Exhibit 1018, page 5

FIG. 20 is a schematic three-dimensional diagram of one viewing angle of an electronic product having a liftable cover using the double hinge structure according to the present utility model; and

FIG. 21 is a schematic three-dimensional diagram of one viewing angle of an electronic product having a liftable cover using the double hinge structure according to the present utility model.

DETAILED DESCRIPTION OF EMBODIMENTS

Embodiments of the present utility model described below are related to a portable video player. However, the present utility model is applicable to all electronic products having liftable covers, including notebook computers (NOTEBOOK), mobile phones, personal digital assistants (PDA) or digital cameras having liftable screens.

As shown in FIG. 4, an electronic product having a liftable cover 9 is provided with a display screen 91 and an operating surface 92. A user makes appropriate operations through the operating surface 92, and the desired results are obtained or confirmed using the display screen 91. As shown in FIG. 7, one of double hinge structures is provided by the present utility model. A double hinge structure 8 is provided with pivots 81 and 82; pivoting pieces 83, 84, 85, and 86; and a fixing piece 87. The pivoting pieces 83, 84, 85, and 86 and the fixing piece 87 are pivotally connected to the pivots 81 and 82. The number of the pivoting pieces and the fixing piece may vary with different double hinge structures, depending on applications thereof. As shown in FIG. 8, after the locking holes of the pivoting pieces 83, 84, 85, and 86 are aligned with the locking holes of the mounting portions 95, 97, 96, and 94 and then locked with screws, the display screen 91 and the operating surface 92 are then connected. After the locking holes of the fixing piece 87 are aligned with the locking holes of the hinge shell 93, screws are used to lock the same.

As shown in FIG. 9, when the display screen 91 and the operating surface 92 are connected together in the above-mentioned manner by using the double hinge structure 8, under the effect of the double hinge structure 8, the display screen 91 can be turned downwards (C direction) toward the operating surface 92 and the two are interposed; at this time, the display screen 91 is positioned on the operating surface 92. The pivoting pieces 83, 84, 85, and 86 are parallel to each other towards the left (A direction), and the pivoting pieces 83 and 86 are positioned on the pivoting pieces 84 and 85. When the display screen 91 is turned by 180 degrees to the position shown in FIG. 10, the display screen 91 faces upwards (D direction) and is positioned to the right (B direction) of the operating surface 92 and on the operating surface 92. The pivoting pieces 83 and 86 face rightwards (B direction); the pivoting pieces 84 and 85 face leftwards (A direction), and the pivoting pieces 83 and 86 are positioned on the pivoting pieces 84 and 85. When the display screen 91 is turned to, for example, the position shown in FIG. 11, the display screen 91 faces upwards (D direction) and is positioned to the right (B direction) of the operating surface 92 and below the operating surface 92. The pivoting pieces 83 and 86 face rightwards (B direction); the pivoting pieces 84 and 85 face leftwards (A direction), and the pivoting pieces 83 and 86 are positioned below the pivoting pieces 84 and 85. When the display screen 91 is further turned to, for example, the position shown in FIG. 12, the display screen 91 faces downwards (C direction) and is interposed with the operating surface 92; at this time, the display screen 91 is positioned below the operating surface 92. The pivoting pieces 83, 84, 85, and 86 face leftwards (A direction) and are parallel with each other. The pivoting pieces 83 and 86 are positioned below the pivoting pieces 84 and 85. At this time, the display screen 91 has completed a 360-degree rotation. As shown in FIG. 13, it is a three-dimensional view of an electronic product having a liftable cover

Petitioners - Exhibit 1018, page 6

using the double hinge structure in FIG. 7.

FIG. 14 shows another mode of the double hinge structure of FIG. 7; and FIG. 15 is a three-dimensional diagram of an electronic product having a liftable cover using the double hinge structure of FIG. 14. FIG. 16 is another mode of the double hinge structure of FIG. 7; and FIG. 17 is a three-dimensional diagram of an electronic product having a liftable cover using the double hinge structure of FIG. 16.

Therefore, when an electronic product having a liftable cover uses the double hinge structure provided by the present utility model, the display screen 91 and the operating surface 92 are equipped with a 360-degree rotating function, which is an advantage that all existing electronic products having liftable covers cannot achieve (the general design enables a rotation by 180 degrees at most). As shown in FIG. 18, FIG. 19, FIG. 20, and FIG. 21, these electronic products having liftable covers have the following advantages because of the 360-degree rotating function: various viewing angles; any surface can serve as a support; when the display screen 91 is completely turned to the other side (rotating by 360 degrees), the display screen can still be viewed, the display screen can thus be turned into a photo frame; panel pictures (such as a notebook computer, a portable video player, a mobile phone or a personal digital assistant) can be changed at any time based on users' mood; and at this time, the operating surface may still be used. In addition, a viewing mode using this viewing angle saves the most space. An appropriate device may also be added, such that the product can be hung on the wall.

Petitioners - Exhibit 1018, page 7

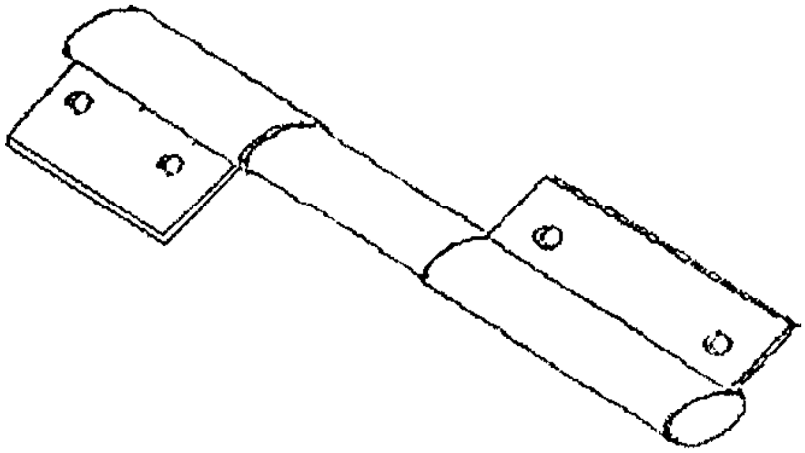

FIG. 1

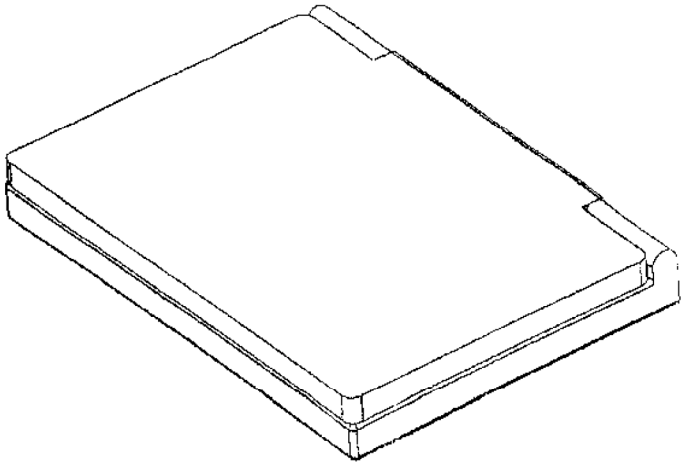

FIG. 2

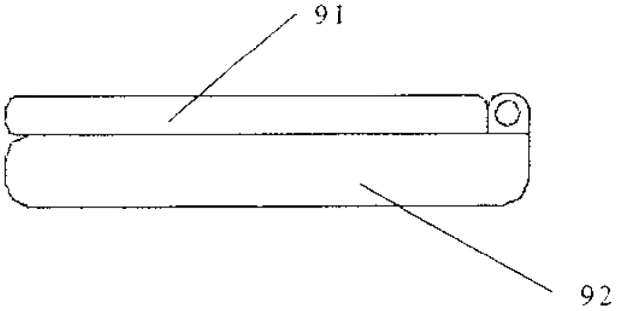

FIG. 3

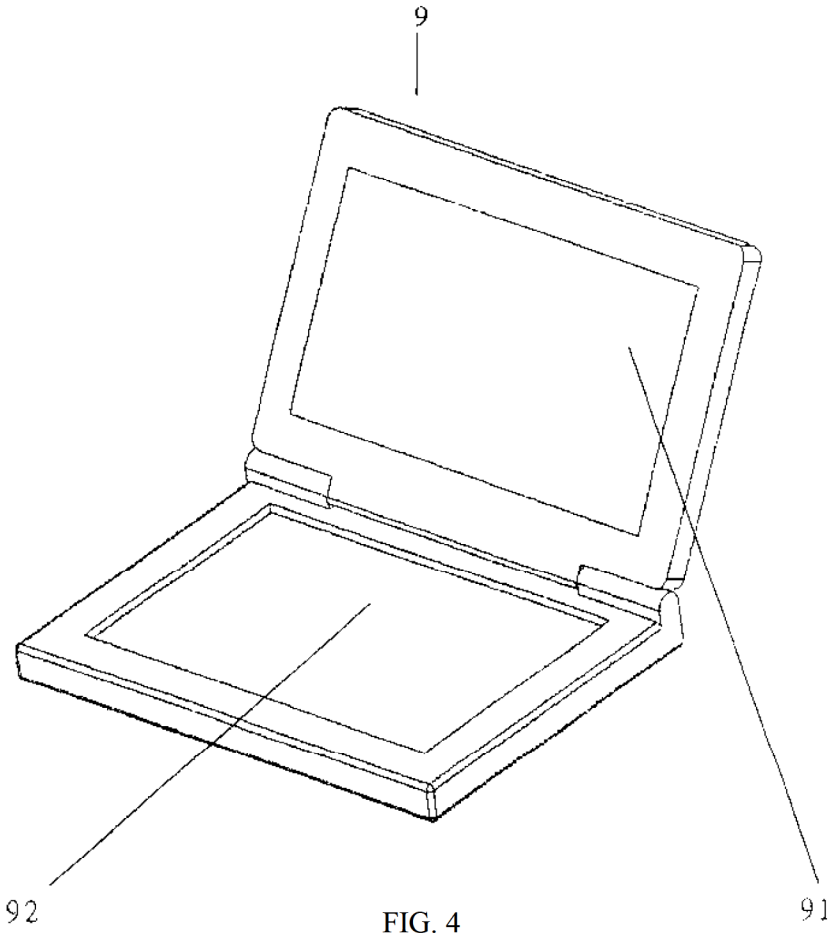

FIG. 4

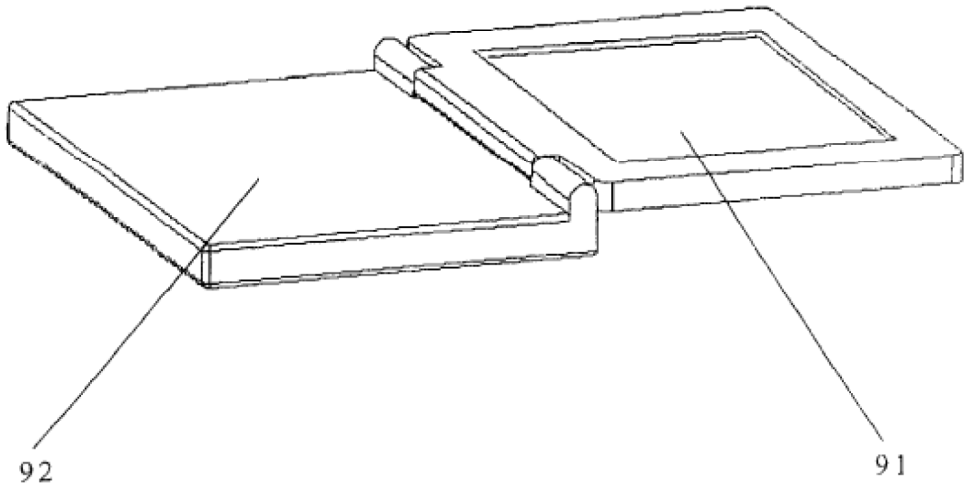

FIG. 5

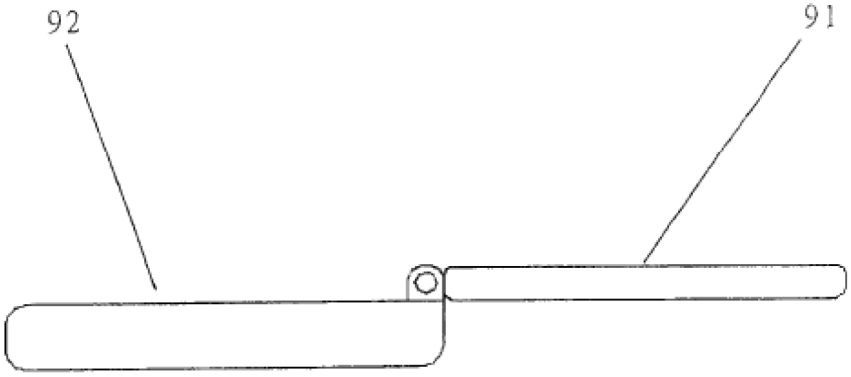

FIG. 6

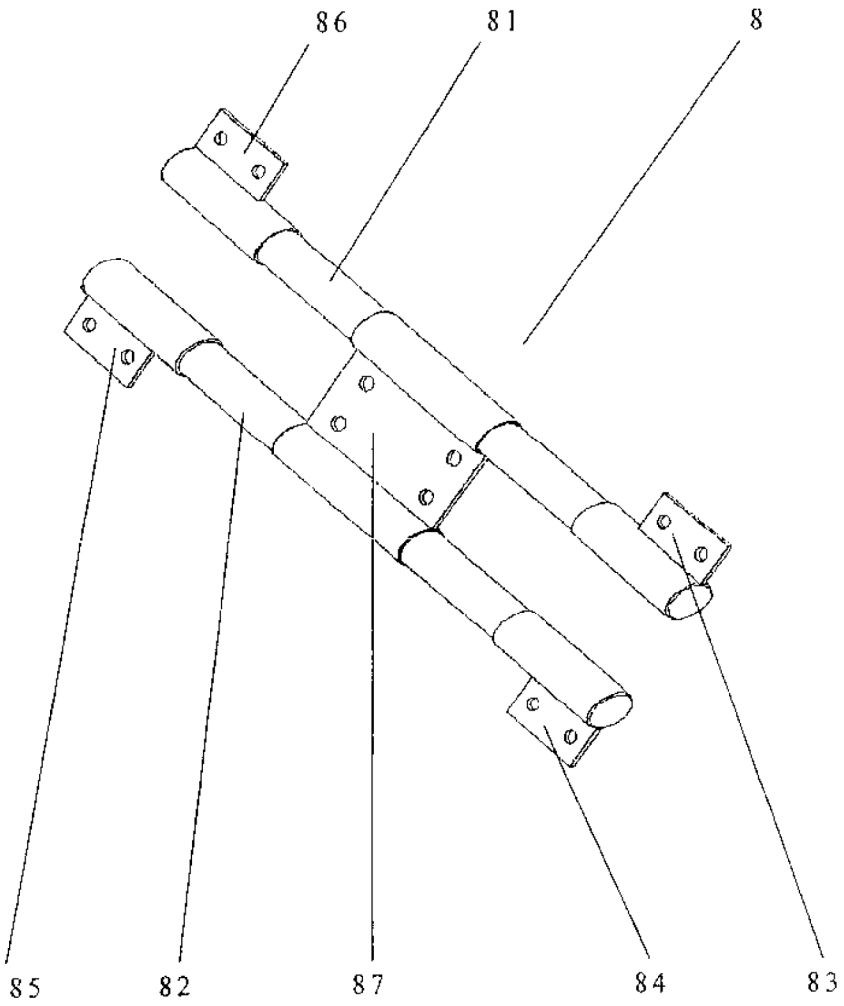

FIG. 7

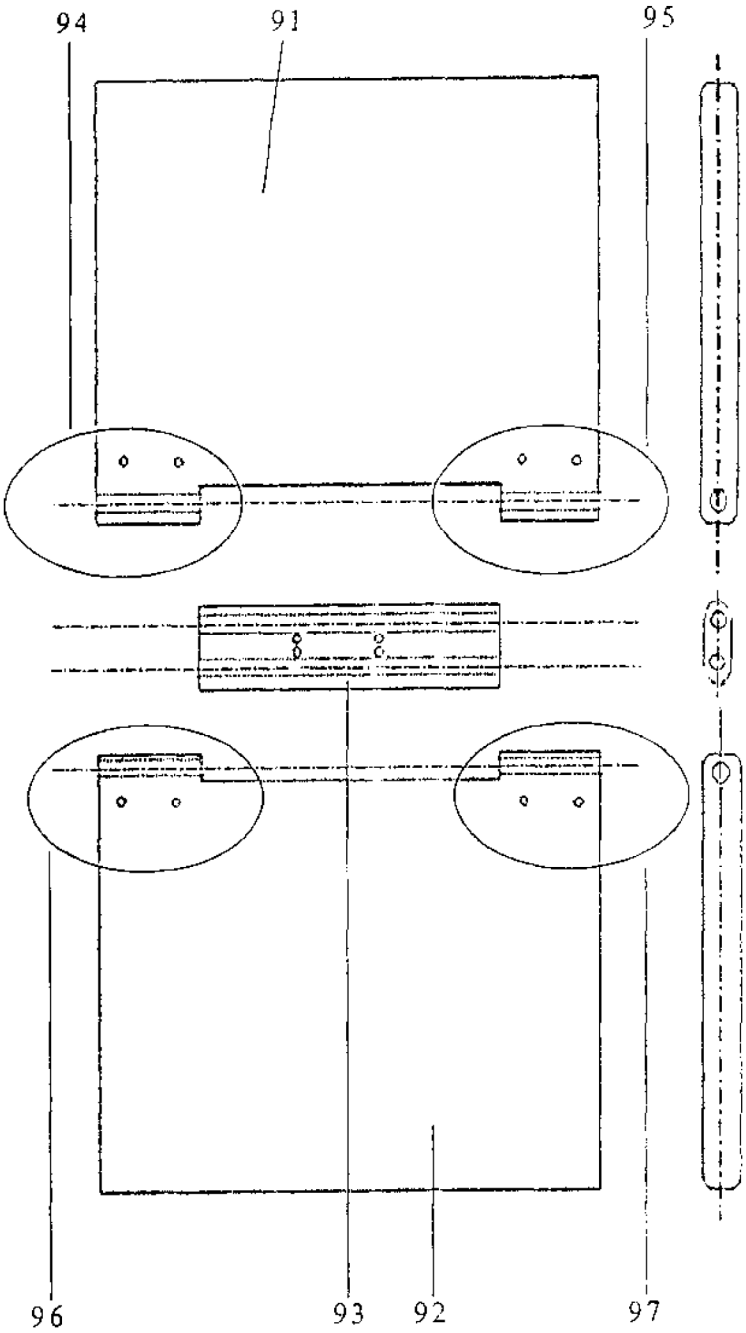

FIG. 8

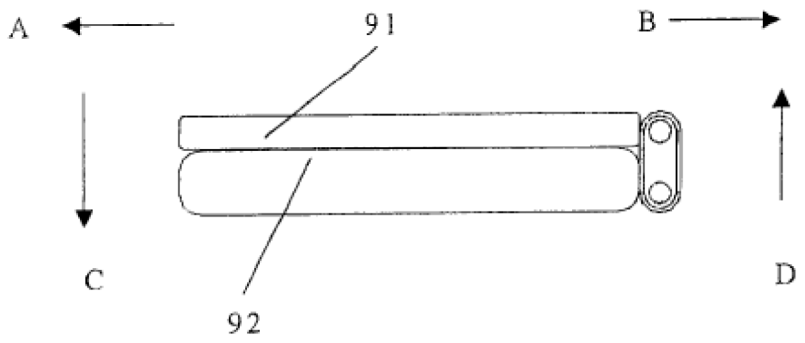

FIG. 9

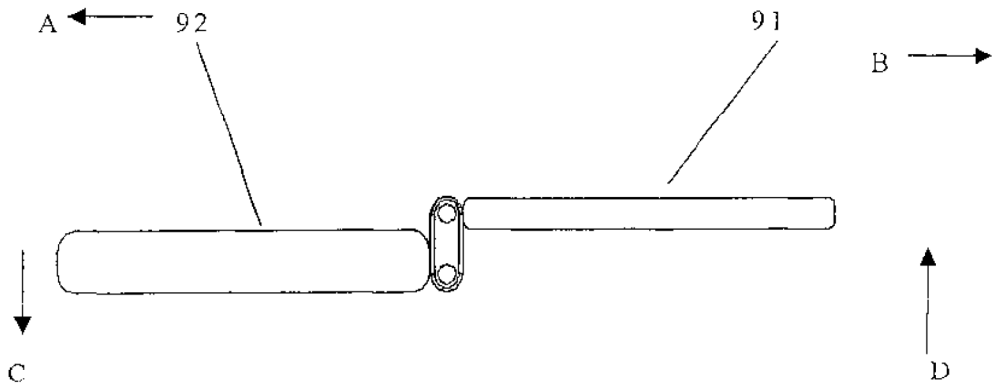

FIG. 10

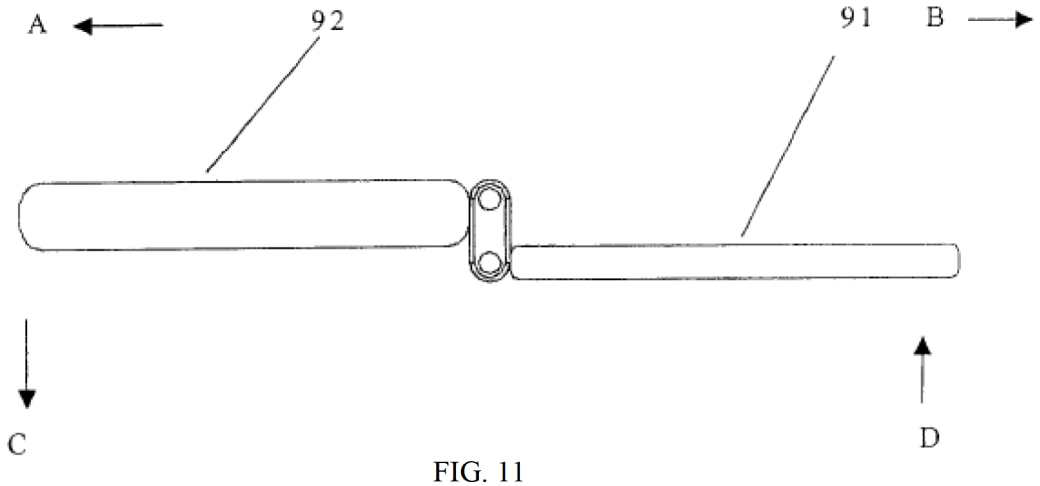

FIG. 11

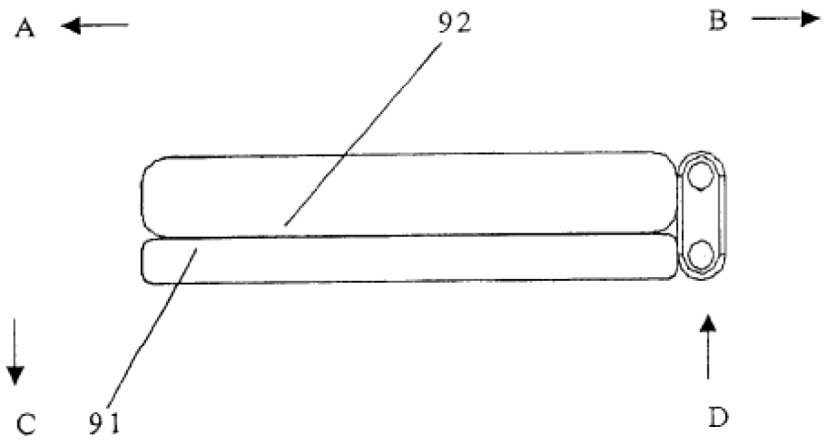

FIG. 12

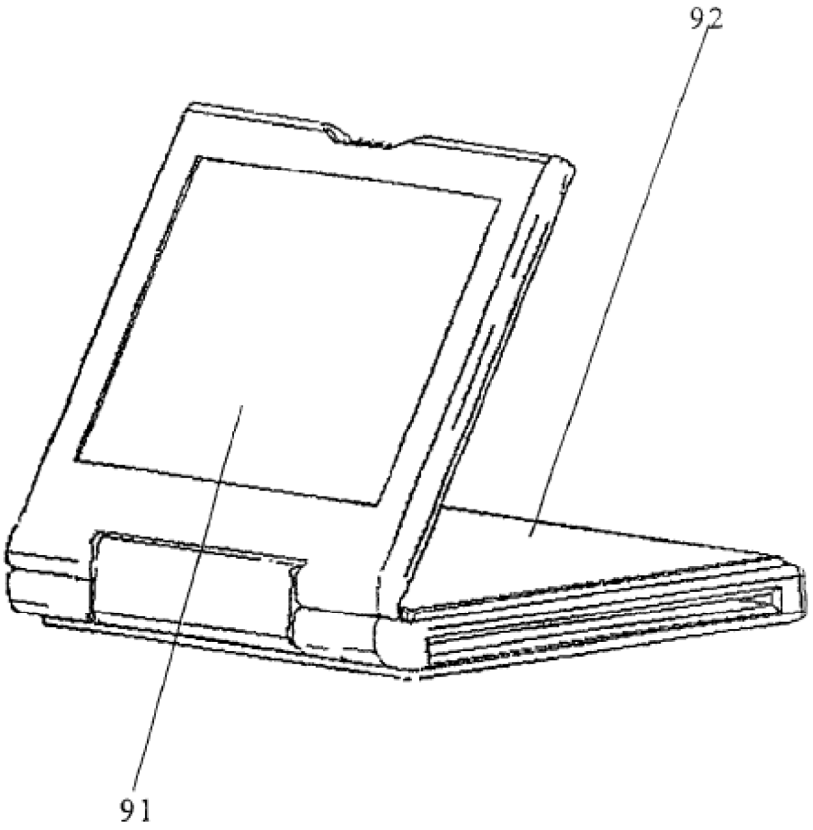

FIG. 13

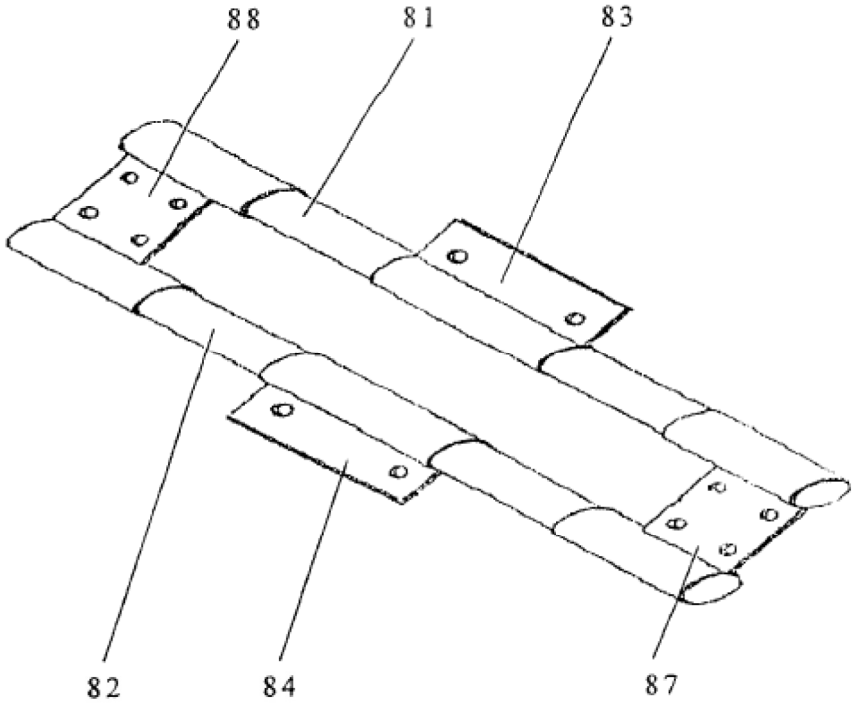

FIG. 14

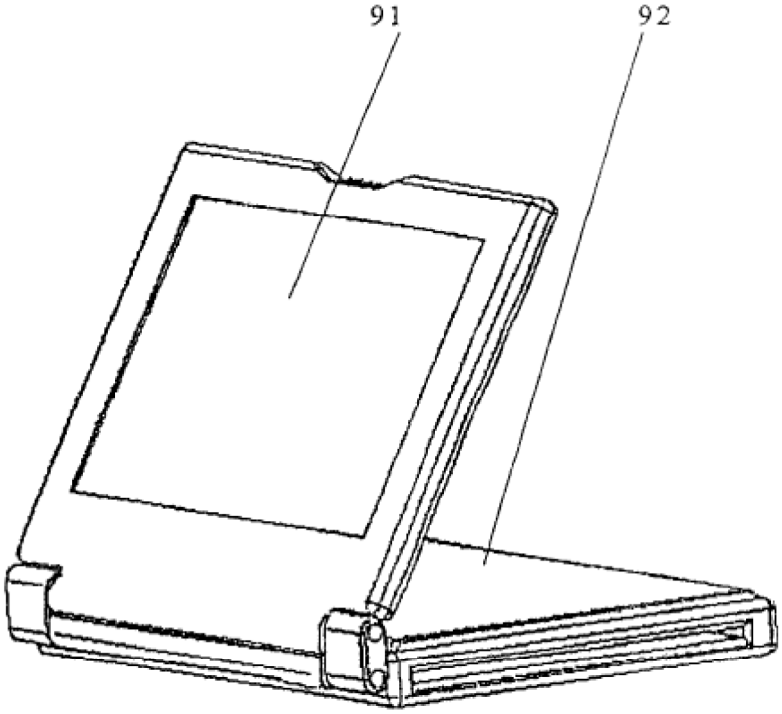

FIG. 15

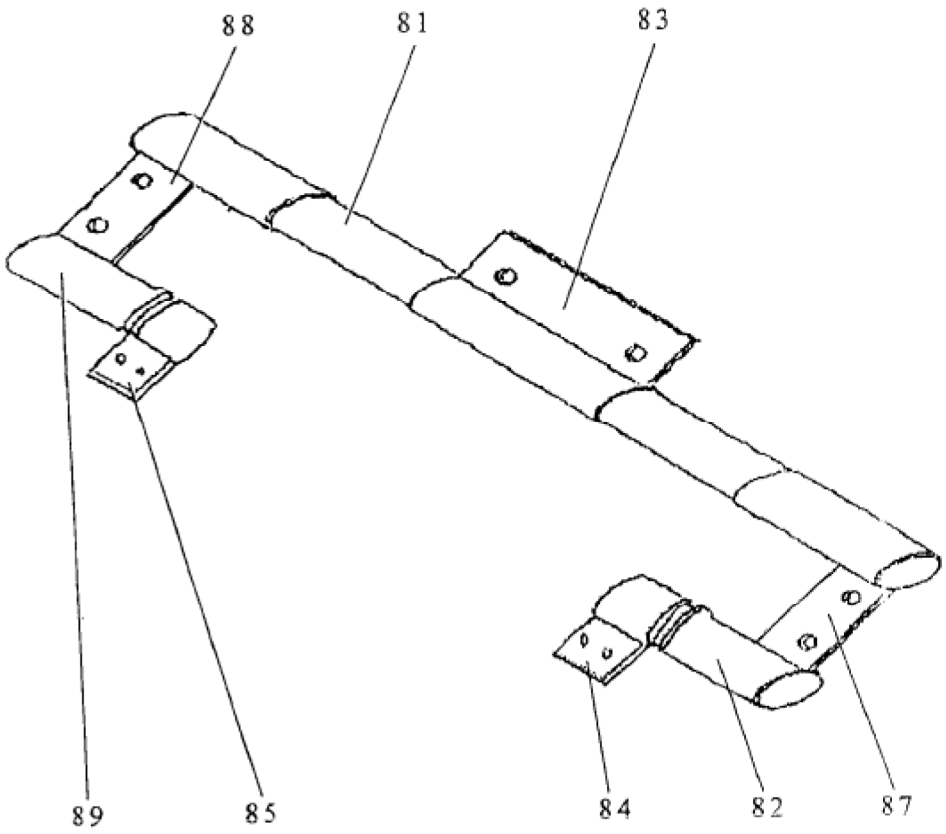

FIG. 16

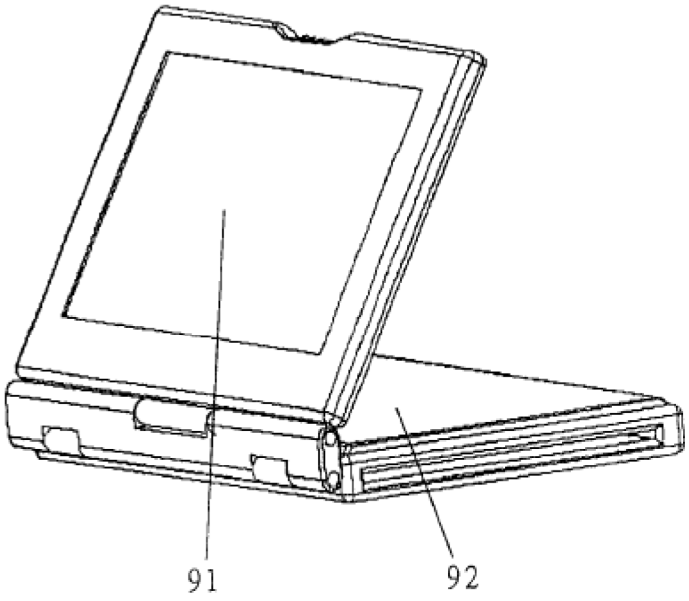

FIG. 17

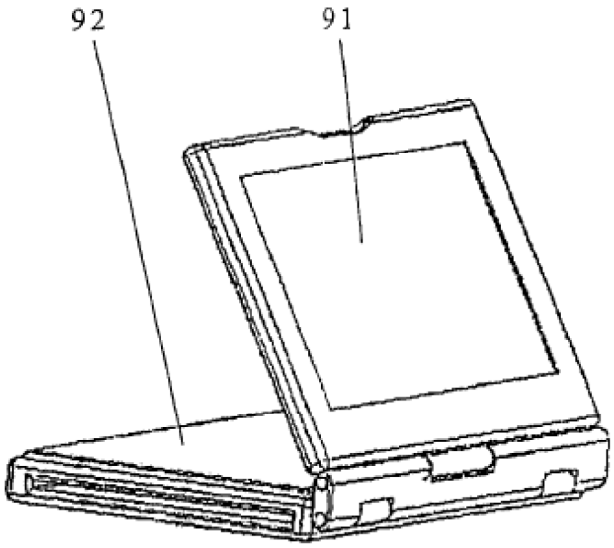

FIG. 18

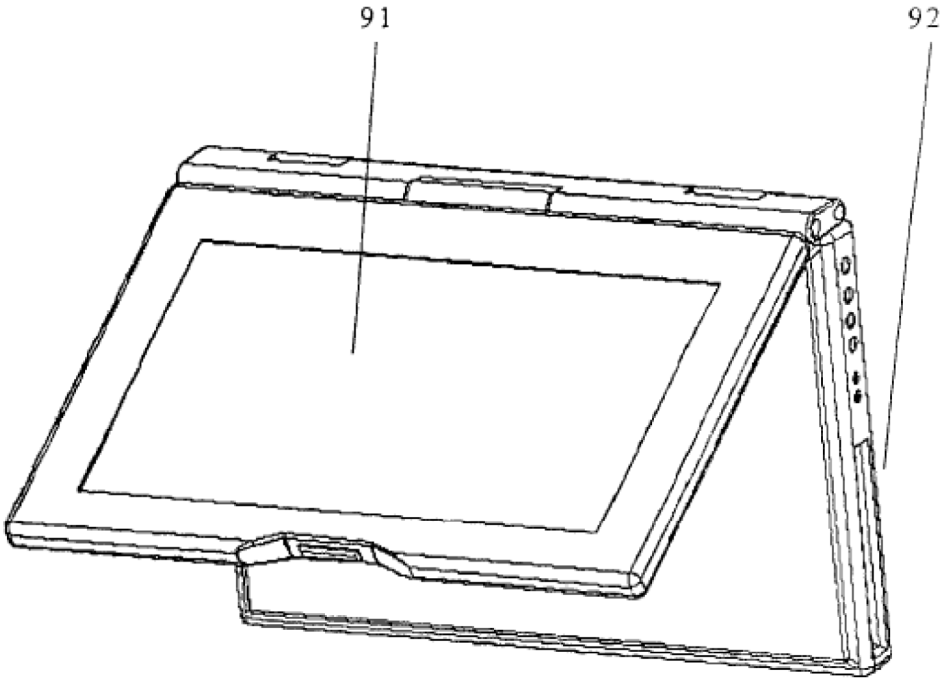

FIG. 19

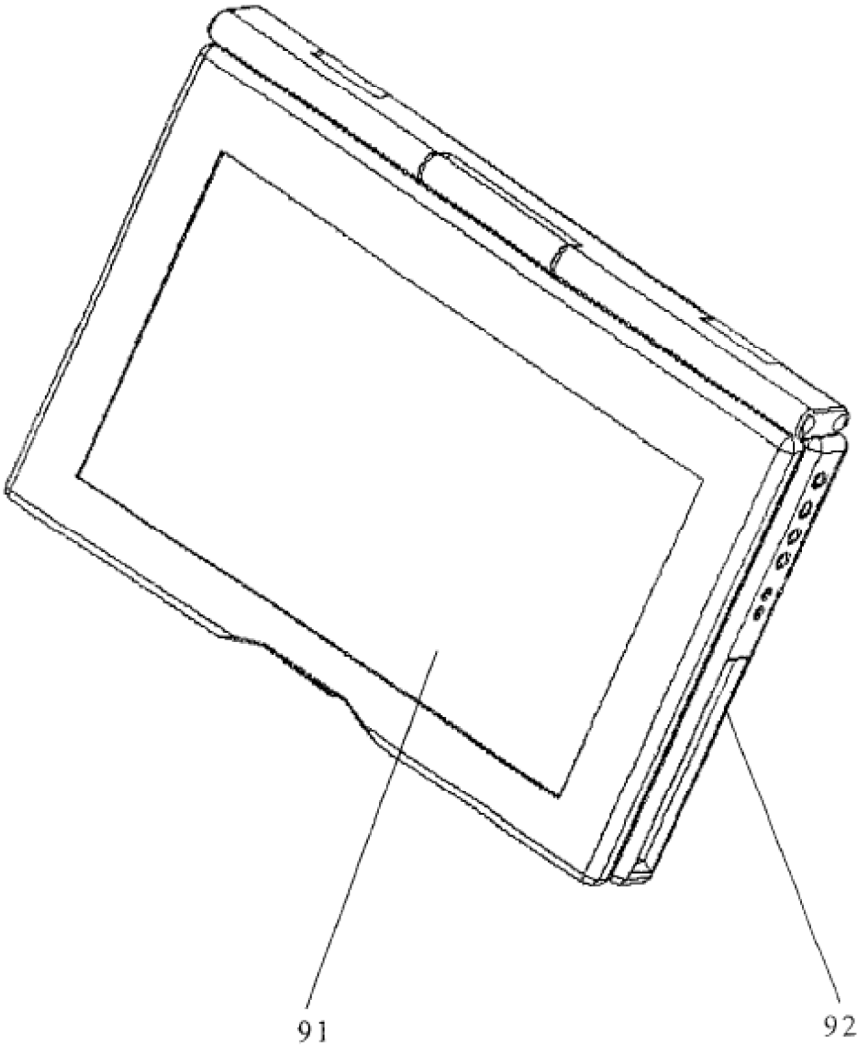

FIG. 20

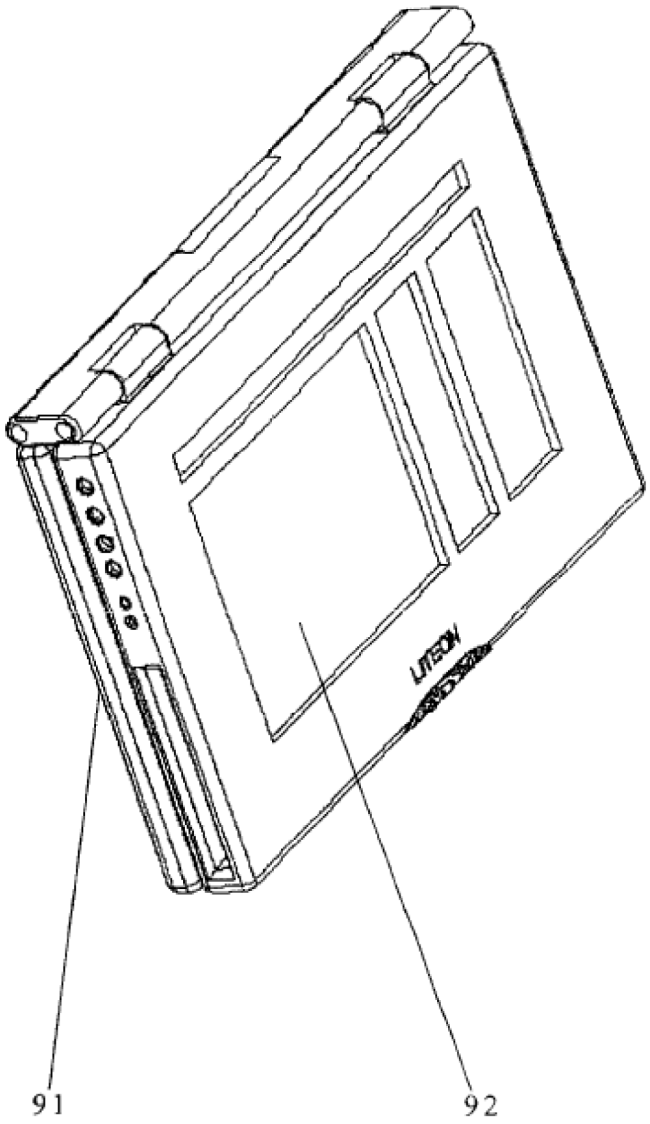

FIG. 21

TARGEM TRANSLATIONS

T 718 384 8040
F 718 388 3516
E info@targemtranslations.com
W TargemTranslations.com

I, Xu hui, declare as follows:

1. I am over eighteen years of age and fully competent to make this affidavit. I have personal knowledge of the information contained in this affidavit, and it is true and accurate to the best of my knowledge.

2. I am a translator fluent in the Chinese and English languages.

3. I translated the Chinese patent file CN2627170Y into English and the English translation is a true and accurate translation of the Chinese patent file CN2627170Y .

I declare under penalty of perjury of the laws of the United States of America that the foregoing information is true and accurate to the best of my knowledge. I understand that willful false statements and the like are punishable by fine or imprisonment, or both {18 U.S.C. § 1001) and may jeopardize the validity of the application or any patent issuing thereon.

Executed on: 2021.12.6, at Rm 602, 5 building B.

Dawei Unit D6. Yuelu District, Changsha. Hunan. China

Signed by Xu hui