JAMES C. YOON, State Bar No. 177155
(jyoon@wsgr.com)
CATHERINE R. LACEY, State Bar No. 291591
(clacey@wsgr.com)
WILSON SONSINI GOODRICH & ROSATI, P.C.
650 Page Mill Rd
Palo Alto, CA 94304-1050
Tel: 650-493-9300
Fax: 650-565-5100

LUCY YEN, State Bar No. 224559
(lyen@wsgr.com)
WILSON SONSINI GOODRICH & ROSATI, P.C.
1301 Avenue of the Americas
40th Floor
New York, NY 10019
Tel: 212-999-5800
Fax: 866-974-7329

JAMIE Y. OTTO, State Bar No. 295099
(jotto@wsgr.com)
JIAYUE HE, State Bar No. 345579
(jhe@wsgr.com)
WILSON SONSINI GOODRICH & ROSATI, P.C.
953 East Third Street, Suite 100
Los Angeles, CA 90013
Tel: 323-210-2900
Fax: 866-974-7329

Attorneys for Defendant Visa Inc.

UNITED STATES DISTRICT COURT

NORTHERN DISTRICT OF CALIFORNIA

SAN JOSE DIVISION

CORTEX MCP, INC., Plaintiff, v. VISA INC., Defendant.	CASE NO.: 5:23-cv-05720-EJD **DEFENDANT VISA INC.'S RESPONSIVE CLAIM CONSTRUCTION BRIEF** Date: September 5, 2024 Time: 10:00 a.m. Place: Courtroom 4 Before: Hon. Edward J. Davila **[FILED UNDER SEAL]**

CORTEX EX2012
Visa v. Cortex, IPR2024-00489
Page (cover)

TABLE OF CONTENTS

PAGE

I. INTRODUCTION ..... - 1 -

II. BACKGROUND OF PATENTS ..... - 1 -

III. PROCEDURAL HISTORY ..... - 3 -

A. District Court Proceedings ..... - 3 -

B. IPR Proceedings ..... - 3 -

IV. LEGAL STANDARDS ..... - 3 -

V. TERM 1: "SCAN/SCANNED" ..... - 4 -

A. Visa's Construction Is Supported by Both Intrinsic and Extrinsic Evidence ..... - 4 -

B. Cortex's Shifting Positions Lack Merit and Underscore the Need for the Court's Construction ..... - 6 -

1. Cortex's Current Construction ..... - 6 -

2. Cortex's Original Construction ..... - 9 -

VI. TERM 2: "CREDENTIAL" ..... - 11 -

A. Visa's Construction Is Supported by the Intrinsic and Extrinsic Evidence ..... - 11 -

B. Cortex Ignores Both the Intrinsic and Extrinsic Evidence When Proposing That No Construction Is Necessary for "Credential" ..... - 14 -

VII. TERM 3: "QUALIFICATION" ..... - 18 -

VIII. TERM 4: "A VIRTUAL REPRESENTATION THAT HAS BEEN VERIFIED BY AN ISSUING AGENCY TO BE AN OFFICIAL REPRESENTATION OF THE CREDENTIAL" ..... - 20 -

A. Visa's Construction Is Consistent with the Intrinsic and Extrinsic Evidence ..... - 20 -

B. The Term "Virtual Representation…" Is a Significant Term That Should Be Construed by the Court ..... - 22 -

IX. CONCLUSION ..... - 23 -

TABLE OF AUTHORITIES

PAGE(S)

CASES

Apple Inc. v. Omni MedSci, Inc., No. 2023-1034, 2024 WL 3084509 (Fed. Cir. June 21, 2024) 9, 11

Aspex Eyewear, Inc. v. Marchon Eyewear, Inc., 672 F.3d 1335 (Fed. Cir. 2012) 11

Atlas IP, LLC v. Medtronic, Inc., 809 F.3d 599 (Fed. Cir. 2015) 14

Budde v. Harley-Davidson, Inc., 250 F.3d 1369 (Fed. Cir. 2001) 5

Halliburton Energy Servs., Inc. v. M-I LLC, 514 F.3d 1244 (Fed. Cir. 2008) 18, 19

Innova/Pure Water, Inc. v. Safari Water Filtration Sys., 381 F.3d 1111 (Fed. Cir. 2004) 3, 4

Intel Corp. v. Qualcomm Inc., 21 F.4th 801 (Fed. Cir. 2021) 11

Interval Licensing LLC v. AOL, Inc., 766 F.3d 1364 (Fed. Cir. 2014) 18, 19, 20

IQASR LLC v. Wendt Corp., 825 F. App'x 900 (Fed. Cir. 2020) 9

Kaken Pharm. Co. v. Iancu, 952 F.3d 1346 (Fed. Cir. 2020) 21, 22

Littelfuse, Inc. v. Mersen USA EP Corp., 29 F.4th 1376 (Fed. Cir. 2022) 12, 14

Merck & Co. v. Teva Pharms. USA, Inc., 395 F.3d 1364 (Fed. Cir. 2005) 11

O2 Micro Int'l Ltd. v. Beyond Innovation Tech. Co., 521 F.3d 1351 (Fed. Cir. 2008) 10

Phillips v. AWH Corp., 415 F.3d 1303 (Fed. Cir. 2005) ..... *passim*

PPC Broadband, Inc. v. Corning Optical Communs. RF, LLC, 815 F.3d 747 (Fed. Cir. 2016) 8

Sequoia Tech., LLC v. Dell, Inc., 66 F.4th 1317 (Fed. Cir. 2023) 22

Star Sci., Inc. v. R.J. Reynolds Tobacco Co., 655 F.3d 1364 (Fed. Cir. 2011) 19

CORTEX EX2012
Visa v. Cortex, IPR2024-00489
Page ii

Wang Labs., Inc. v. Am. Online, Inc.,
197 F.3d 1377 (Fed. Cir. 1999) 18

STATUTES

35 U.S.C. § 112 ¶ 2 18

RULES

N.D. Cal. L.P.R. 4-2(b) 8

N.D. Cal. L.P.R. 4-3(b) 8

TABLE OF ABBREVIATIONS

Abbreviation	Word or Phrase
’531 Patent	U.S. Patent No. 9,251,531
’854 Patent	U.S. Patent No. 9,954,854
’859 Patent	U.S. Patent No. 10,749,859
’973 Patent	U.S. Patent No. 11,329,973
’215 Patent Appl.	U.S. Patent Application No. 11/851,215 (Ex. 14)
cl.	Claim
Cortex	Cortex MCP, Inc.
Dreifus Decl.	Henry Dreifus Declaration
Ex.	Exhibit in Support of Visa’s Responsive Claim Construction Brief
FAC	First Amended Complaint
Kang	U.S. Patent Publication No. 2009/0307756
IPR	*Inter Partes* Review
NFC	Near Field Communication
’992 Oborne	U.S. Patent Pub. No. 2012/0316992, Timothy W. Oborne
Ohara	U.S. Patent Pub. No. 2007/0208665, Hiromi Ohara (Ex. 12)
Op. Br. or Opening Brief	Cortex Opening Claim Construction Brief (ECF No. 99)
POPR	Patent Owner’s Preliminary Response
POSITA	Person of ordinary skill in the art
ROA	Response to Office Action
Visa	Visa Inc.

*All emphases in the brief are added unless otherwise noted.

CORTEX EX2012
Visa v. Cortex, IPR2024-00489
Page iv

I. INTRODUCTION

Visa submits this responsive claim construction brief to address the disputed terms in the Asserted Patents. While Cortex claims "no construction [is] necessary" for any of the disputed terms, it is in fact advocating unsupportable interpretations of each term. By conflating "scan" with "transmit" and defining "credential" to capture payment instruments, for example, Cortex repeatedly extends the meanings of the disputed terms beyond their ordinary and intended scope.

Visa, on the other hand, provides reasonable constructions that are consistent with the shared specification and prosecution history of the Asserted Patents. With respect to the four terms at issue:

(1) "*Scan*" should be construed to align more closely with the verb "read" (as opposed to "transmit"), such that a scanned code is one that is *read by* the receiving device (rather than *transmitted to* the receiving device).

(2) "*Credential*" should be defined to include only those documents and evidence pertaining to an individual's identity or certifications, not to encompass payment instruments like credit cards.

(3) "*Qualification*" should be found indefinite because a POSITA cannot reasonably determine the scope of the claimed invention.

(4) "*Virtual representation . . .*" must be construed because the term is potentially dispositive and Cortex already argued to the Patent Office that it is a key element missing in the prior art.

Visa respectfully requests that the Court adopt its constructions to ensure clarity and uphold the integrity of the patent claims.

II. BACKGROUND OF PATENTS

The Asserted Patents are all titled "File Format and Platform for Storage and Verification of Credentials." They share a common specification and figures.[1] They each claim priority to the same December 21, 2012 Provisional Application, also titled "File Format and Platform for

[1] All citations to the '531 Patent also refer to the corresponding material in the other Asserted Patents unless otherwise indicated.

CORTEX EX2012
Visa v. Cortex, IPR2024-00489
Page 1

Storage and Verification of Credentials," and incorporated by reference into the Asserted Patents. *See generally* '531 Patent; '854 Patent; '859 Patent; and '973 Patent. Cortex currently asserts an unwieldy number of claims which cannot reasonably be tried (independent claims underlined and bolded):

Asserted Patent	Asserted Claims
'531 Patent	**1**, 2, 4, 5, 6, 7, 8, 9, 10, 14, **15**, 17, 18, 20, **21**, 23, 24, 25, 27, and 28
'854 Patent	**1**, 2, 3, **8**, 9, 10, **15**, 16, and 17
'859 Patent	**1**, 2, 4, 5, **9**, 10, 12, 13, **18**, 19, **20**, and 21
'973 Patent	**1**, 2, 4, **8**, 9, 11, **16**, and 17

The Asserted Patents describe an "Officially Verifiable Electronic Representation (OVER) File," which purports to provide a secure format and platform for storing and verifying user credentials. *See* '531 Patent at 3:50-53. The term "OVER File" is unique to these patents. According to the patents, OVER File credentials may include government-issued IDs like driver's licenses and professional licenses, as well as privately-issued credentials like employee IDs. *Id*. at 3:65-4:6.

Although the patents use unique nomenclature, the underlying technology is not at all unique or novel. In summary, all the Asserted Patents claim to do is to generate, store, and verify digital credentials. The OVER File system consists of three main components: an OVER File storage client, an OVER File third-party client, and an OVER File generation and authorization engine. *Id*. at 3:53-57; Fig. 1. The OVER File storage client, executed on a user device, stores generated OVER Files, requests the generation of new such files, and displays stored credentials for third-party verification. *Id*. at 3:57-64. It can be part of a virtual wallet or a standalone application. *Id*. at 3:59-61, 4:51-54. The OVER File database includes a generation and verification engine that can create OVER File credentials based on user data, third parties, or issuing authorities. *Id*. at 4:25-30. The third-party client can be a standalone application or an API for credential verification through a third-party application. It allows a third party to scan or interact with displayed OVER File credentials and verify them via a remote server. *Id*. at 4:10-15, 4:18-24, 7:54-59.

The verification process may begin with the user selecting an OVER File credential for display on their device. *Id*. at 7:32-8:7. The displayed credential information, including an

CORTEX EX2012
Visa v. Cortex, IPR2024-00489
Page 2

information code, can then be scanned by a third party, who transmits the code for verification. *Id.* Alternatively, the credential information can be transmitted for verification using other communications, such as networked or radio transmission, like Bluetooth or NFC. *Id.* at 12:10-15. The OVER File database then compares the received information with stored credentials and indicates whether the credential is valid. *Id*. at 8:12-30.

III. PROCEDURAL HISTORY

A. District Court Proceedings

On January 26, 2023, Cortex filed a complaint against Visa in the Western District of Texas, alleging infringement of the Asserted Patents. ECF No. 1. The Western District of Texas granted Visa's motion to transfer, denied Visa's motion to dismiss as moot, and allowed Visa to refile its motion. ECF No. 55 at 17. On December 7, 2023, Visa refiled its Motion to Dismiss, which remains pending. ECF No. 65. On June 4, 2024, Visa moved to stay this case pending the IPR proceedings listed below. ECF No. 93. The Case Tutorial and Claim Construction Hearing is set for September 5, 2024. ECF No. 90.

B. IPR Proceedings

In January 2024, Visa filed five IPR petitions challenging all claims of the Asserted Patents. Cortex filed its POPRs for all petitions on May 6, 2024. All institution decisions are expected by August 6, 2024.

Patent	Case No.	Visa's Petition Filing Date	Cortex's Response Filing Date
'531 Patent	PTAB-IPR2024-00486 PTAB-IPR2024-00487	Jan. 25, 2024	May 6, 2024
'854 Patent	PTAB-IPR2024-00488	Jan. 26, 2024	May 6, 2024
'859 Patent	PTAB-IPR2024-00489	Jan. 26, 2024	May 6, 2024
'973 Patent	PTAB-IPR2024-00490	Jan. 26, 2024	May 6, 2024

IV. LEGAL STANDARDS

"It is a 'bedrock principle' of patent law that 'the claims of a patent define the invention to which the patentee is entitled the right to exclude.'" *Phillips v. AWH Corp.*, 415 F.3d 1303, 1312 (Fed. Cir. 2005) (quoting *Innova/Pure Water, Inc. v. Safari Water Filtration Sys.*, 381 F.3d 1111,

1115 (Fed. Cir. 2004)). To ascertain the meaning of claims, the Court looks primarily to the intrinsic evidence: the claims themselves, the specification, and the prosecution history—with the specification being "the single best guide to the meaning of a disputed term." *Id.* at 1314-17. The construction that stays true to the claim language and most naturally aligns with the specification is the correct construction. *Id*. at 1316.

Extrinsic evidence consists of "evidence external to the patent and prosecution history, including expert and inventor testimony, dictionaries, and learned treatises" and may be considered in claim construction as well. *Id.* at 1317. While extrinsic evidence is less significant than the intrinsic record, the Court can still consider extrinsic evidence where it is helpful "[to] educate [itself] regarding the field of the invention . . . [and to] determine what a [POSITA] would understand claim terms to mean." *Id.* at 1319.

The plain and ordinary meaning of a claim term is the meaning that the term would have to a person of ordinary skill in the art at the time of the invention, *i.e.*, as of the effective filing date of the patent application. *Id.* at 1313. Here, the parties agree that a POSITA would have the equivalent of a Bachelor's degree in computer science, computer engineering, or equivalent, with two years of experience with electronic payment systems and/or network authentication systems involving electronic credentials. Visa's expert, Mr. Henry Dreifus, meets these requirements. *See* Dreifus Decl. ¶¶ 4-16, 35-36.

V. TERM 1: "SCAN/SCANNED"

Visa's Construction	Cortex's Construction
(verb) "read using a light sensitive device to convert information displayed into data to be interpreted by a computer" (noun) "file generated from scanning"	*Current:* No construction necessary *Original:* (verb) "transmitted as represented data via an electronic device" (noun) "the result of the process of transmitting represented data via an electronic device"

A. Visa's Construction Is Supported by Both Intrinsic and Extrinsic Evidence

Visa's proposed construction—including the verb "read"—aptly reflects the interaction in the Asserted Patents between the verifying device and the information code on the user's device,

particularly in contrast to the verb "transmit" from Cortex's original construction. Additionally, the word "scan" is repeatedly used with reference to a display of the information to be scanned: "The OVER File third party client 6 may allow a third party to ***scan*** or otherwise interact with OVER File credentials ***displayed*** on a user device." '531 Patent at 4:10-12; *see also id*. at 7:59-62, 12:15-19, 12:30-32, 13:16-24, 14:2-10; Dreifus Decl. ¶¶ 48-54. Further, Figure 1 refers to a "Scan of Two-Dimensional Information Code." '531 Patent at Fig. 1. The specification also references a "scanner," which is a common light-sensitive device, as a type of input device for scanning. Dreifus Decl. ¶ 55; '531 Patent at 15:66-16:1 ("Examples of input devices include a keyboard, a cursor control device (e.g., a mouse), a microphone, a ***scanner***, biometric sensors, and the like."); *id.* at 18:1-2.

Based on these passages, a POSITA at the time of the invention would have understood that scannable codes, such as barcodes and QR codes, are scanned or read using light-sensitive devices, like a handheld bar code scanner or a camera. Dreifus Decl. ¶¶ 55-57. Thus, Visa's construction should be adopted as it renders the patent internally consistent. *Budde v. Harley-Davidson, Inc.*, 250 F.3d 1369, 1379-80 (Fed. Cir. 2001) ("In construing terms used in patent claims, it is necessary to consider the specification as a whole, and to read all portions of the written description, if possible, in a manner that ***renders the patent internally consistent***.").

The extrinsic evidence further validates Visa's construction. *See Phillips*, 415 F.3d at 1318 ("Within the class of extrinsic evidence, the court has observed that dictionaries and treatises can be useful in claim construction."). For example, multiple dictionaries from both the time of the invention and the present-day show that "scan" often refers to reading an image or involves a similar act like passing or moving over an image or displayed information:

(i) <u>*Merriam-Webster Dictionary*</u>: "to pass over in the formation of an image" or "an image formed by scanning something." Ex. 1 (VISA_00035001-35008).

(ii) <u>*New Oxford American Dictionary*</u>: "convert (a document or picture) into digital form for storage or processing on a computer." Ex. 2 (VISA_00035726-35729).

(iii) <u>*Microsoft Computer Dictionary*</u>: "in facsimile and other optical technologies, to move a light-sensitive device across an image-bearing surface such as a page of text, converting the light and dark areas on the surface to binary digits that can be interpreted by a computer." Ex. 3 (VISA_00035032-35679 at VISA_00035505).

(iv) *Cambridge Dictionary*: "to use a machine to put a picture of a document into a computer, or to take a picture of the inside of something." Ex. 4 (VISA_00035014-35019).

(v) *Oxford English Dictionary*: "to cause (an area, object, or image) to be systematically traversed by a beam or detector; to convert (an image) into a linear sequence of signals in this way for purposes of transmission or processing" and "an image, diagram, etc. obtained by scanning." Ex. 5 (VISA_00035687-35710); Ex. 6 (VISA_00035711-35717).

These dictionary definitions require a "scan" to be in image format, and therefore, capable of being "read using a light sensitive device." *See* Dreifus Decl. ¶ 58.

Additionally, Mr. Henry Dreifus, an expert in payment cards, identity cards, and advanced card solutions, confirmed that "Visa's construction is [ ] consistent with the plain and ordinary meaning," and Cortex's construction does nothing but introduce additional terms into the claim that would only result in confusion. *Id.* ¶¶ 48-63.

Because Visa's construction is supported by both the intrinsic and extrinsic evidence, it should be adopted.

B. Cortex's Shifting Positions Lack Merit and Underscore the Need for the Court's Construction

1. Cortex's Current Construction

Cortex's assertion of "no construction necessary" lacks credibility given its inability to consistently define and defend the scope of the term in light of the claims and specification. In its infringement allegations against Visa, Cortex alleges that a "scan" occurs when payment transaction data is transmitted using NFC technology from the mobile device to the merchant's payment terminal. *See, e.g.*, FAC ¶ 24 ("In response to a proximity-payment request (i.e., scan associated with the OVER file) at the POS terminal, the Visa Network verifies that the token correlates to the PAN, i.e., the information associated with the credential of the user."). Cortex's current position that the plain and ordinary meaning of the term "scan" would include "NFC functionality" is inconsistent with the claim language and specification.

With respect to the claim language, the patentee separated the claims of the Asserted Patents into two groups: those that use the term "scan" and those that use the term "Near Field Communication (NFC) protocol-based communication." A comparison of language from claim 1

of the '531 Patent—which explicitly references "a scan"—and language from claim 1 of the '973 Patent—which explicitly references "NFC"—makes clear that the patentee was claiming two distinct methods of sharing information:

'531 Patent, Claim 1	'973 Patent, Claim 1
…a verifying request to verify that the OVER file transmitted to the user authenticates the user **based on a scan associated with the OVER file** on the OVER file store client device of the user…	…a verifying request to verify that the OVER file transmitted to the user authenticates the user **based on a Near Field Communication (NFC) protocol-based communication** associated with the OVER file on the OVER file storage client device of the user…

The parallel but distinct use of these two terms shows there are separate and alternative ways of sharing information with the verifying device.

With respect the specification, Cortex ignores that it explicitly distinguishes "scannable information codes" from other types of information codes that cannot be scanned:

> "The OVER File storage client 500 may generate ***a scannable information code*** for scanning by the third party to provide verification of the credential, as described in more detail above. ***In another embodiment***, the OVER File storage client may generate ***an information code in the form of a networked or radio transmission***, such as, for example, a Near Field Communication (NFC) or Bluetooth, or in the form of sensor information, such as, for example, a bump."

'531 Patent at 12:7-15. The passage above expressly identifies two separate embodiments: the first embodiment relates to "a *scannable* information code for *scanning*"; "in *another* embodiment," the specification describes a *separate* embodiment that has nothing to do with scanning. Dreifus Decl. ¶ 57. A POSITA would understand from this passage that "a scannable information code" is separate and distinct from "information code in the form of a networked or radio transmission, such as, for example, a Near Field Communication (NFC) or Bluetooth, or in the form of sensor information, such as, for example, a bump." '531 Patent at 5:15-17, 12:7-15; Dreifus Decl. ¶ 57. Cortex's construction improperly captures embodiments involving codes that are not intended to be scanned but instead shared by other methods, such as a networked or radio transmission.

Cortex's construction is also not supported by the extrinsic evidence. Indeed, Cortex's extrinsic evidence should be given no weight because it is unauthenticated, procedurally improper, and substantively inapposite.

First, the IEEE's "Authoritative Dictionary of IEEE Standards Terms" was never disclosed, produced, or authenticated by Cortex. In violation of Local Patent Rule 4-2(b) and 4-3(b), Cortex failed to identify or produce this extrinsic evidence during the exchange of preliminary claim constructions or when the parties submitted their joint claim construction and prehearing statement. *See* N.D. Cal. L.P.R. 4-2(b) ("Extrinsic evidence shall be identified by production number or by producing a copy if not previously produced"), *id.* at 4-3(b) (requiring "identification of any extrinsic evidence known to the party on which it intends to rely either to support its proposed construction or to oppose any other party's proposed construction"); ECF No. 89. Yet, Cortex purports to quote and rely on this dictionary in its Opening Brief, even though it again fails to provide a copy, much less authenticate it.

Cortex's conduct is particularly problematic because Cortex selectively quoted one of several definitions for the term "scan" from the IEEE reference. And, as it turns out, the very first definition offered actually favors Visa's proposed construction, not Cortex's: "**scan (1) (general) To examine sequentially part by part.**" Ex. 7 (IEEE 100, The Authoritative Dictionary of IEEE Standards Terms, (7th ed. 2000)). This definition describes the process of "reading." Dreifus Decl. ¶ 63. In contrast, Cortex's selectively quoted definition of "[t]he process by which a data acquisition system interrogates remote stations or points of data" is commonly used for remote stations, such as those designed to collect environmental data, like weather conditions, air quality, water levels, and other environmental parameters, or to collect telecommunications data, like signal quality. Op. Br. at 9; Dreifus Decl. ¶ 63. In fact, this definition does not even support Cortex's plain and ordinary meaning, since it relates to acquiring data from "remote stations" while "***Near*** Field Communication (NFC)" is based on close proximity and does not work remotely. Dreifus Decl. ¶ 63. Similarly irrelevant is Cortex's reference to a radar being used to "scan[]" a horizon, as such usage arises in wholly unrelated maritime or aerospace contexts. *See* Op. Br. 9. Because Cortex's extrinsic evidence relates to irrelevant contexts, it should be ignored. *See PPC Broadband, Inc. v. Corning Optical Communs. RF, LLC*, 815 F.3d 747, 752 (Fed. Cir. 2016) ("The fact that [the disputed term] has multiple dictionary meanings does not mean that all of these meanings are reasonable interpretations in light of [the] specification.").

Second, Cortex's extrinsic evidence, including the Apple, Google, Android, and Sony technical references, cannot be used to contradict the intrinsic evidence. *Apple Inc. v. Omni MedSci, Inc.*, No. 2023-1034, 2024 WL 3084509, at *5 (Fed. Cir. June 21, 2024) (citing *Phillips*, 415 F.3d at 1317, 1322-23). While Cortex claims that these third-party technical documents use the term "scan" for "NFC tags," the word "scan"—as used in the context of the digital credentials described ***in the patent***—is never used to mean NFC communications. *See supra* at Section V.B.1. Nor does the term "NFC tag" appear anywhere in the specification. *See, e.g., generally* '531 Patent. Instead, the patents use the term "NFC" as a protocol for communicating or transmitting data, rather than scanning data. Because Cortex's technical references contradict the intrinsic evidence, they must be disregarded.

These technical references also post-date and arise from entirely different contexts than the claimed inventions of the Asserted Patents. *See IQASR LLC v. Wendt Corp.*, 825 F. App'x 900, 903 (Fed. Cir. 2020) (holding that disputed term used in isolated or different context does not inform its plain and ordinary meaning). Cortex's reliance on documentation for the Apple AirTag is misplaced, given that AirTags were not released until *eight years after* the '531 patent application was filed in 2013 and *five years after* the '531 Patent was issued in 2016. ECF No. 99-2. Similarly, the Sony Xperia 1 was not released until February 2019. ECF No. 99-3. References dated *after* the issuance of the patent have limited value in establishing the meaning of the term *at the time* of the invention. *IQASR LLC*, 825 F. App'x at 904 ("But these events took place after the issuance of the patent, limiting their value in establishing the meaning of the term at the time of invention, some five years earlier.").

Thus, none of the evidence supports Cortex's "plain and ordinary meaning" of the term "scan," and the Court should reject Cortex's unhelpful proposal that "no construction is necessary."

2. Cortex's Original Construction

To fit its infringement theory, Cortex originally sought to construe the term "scanned" (verb) as "*transmitted as represented data via an electronic device*," and "scan" (noun) as "*the result of the process of transmitting represented data via an electronic device*." ECF No. 89 at Ex.

A. Visa addresses this construction because while Cortex currently hides behind the elusive position of "no construction necessary," it has never disavowed its original construction and may very well be trying to backdoor into this overbroad construction now. Given that even Cortex is unable to settle on the meaning of the term "scan," this disputed term is ripe for construction by the Court. *O2 Micro Int'l Ltd. v. Beyond Innovation Tech. Co.*, 521 F.3d 1351, 1361 (Fed. Cir. 2008) (emphasizing the importance of determining meaning and scope of patent claims to avoid ambiguity and ensure accurate interpretation).

As a preliminary matter, the claims use the words "scan" and "transmit" to reference two distinct actions:

> ***transmitting***, to the OVER file storage client device of the user, the OVER file in response to the OVER file generation request;
>
> receiving, from an OVER file third-party client verifying device, a verifying request to verify that the OVER file ***transmitted*** to the user authenticates the user based on a ***scan*** associated with the OVER file on the OVER file store client device of the user;

'531 Patent, Cl. 1. Here, the OVER file was "transmitted" to the user's client device. In contrast, the third-party verifying device receives "a scan."

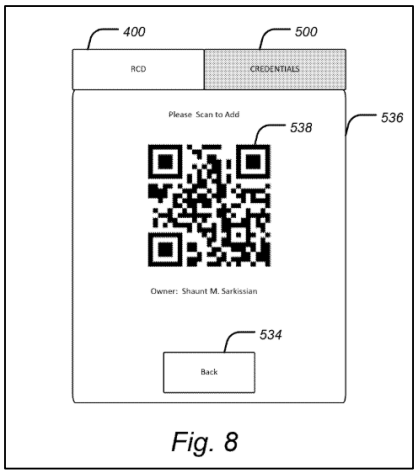

'531 Patent, Fig. 8

Cortex's original construction thus makes no sense because by requiring the act of "transmitting," it excludes every embodiment that actually uses the word "scan." Indeed, a code need only be displayed to be scanned. No transmission is required. The most obvious example of this is the QR code shown in Fig. 8 of the '531 Patent. A POSITA would understand that these embodiments involving scanning a barcode, QR code, or other displayed code do not require any transmission by the displaying device. *See* '531 Patent at 14:2-6; Dreifus Decl. ¶¶ 51-57, 60-61.

Further, if the patentee had intended the word "scan" to simply mean "transmit," then the claim language would say "transmit," as it already does for other steps in the claim where information is transmitted from one device to another. The fact that these two adjacent claim

elements use different terms in parallel supports the conclusion that the two terms were not meant to have the same meaning. *See Omni MedSci, Inc.*, 2024 WL 3084509, at *4 (citing *Aspex Eyewear, Inc. v. Marchon Eyewear, Inc.*, 672 F.3d 1335, 1349 (Fed. Cir. 2012) ("The fact that the two adjacent claims use different terms in parallel settings supports the district court's conclusion that the two terms were not meant to have the same meaning . . .").

Given the distinction drawn by the claims and specifications, the terms "scan" or "scanned" should be construed differently from the terms "transmitted" or "transmission" (as well as "NFC protocol-based communication"). *See Omni MedSci, Inc.*, 2024 WL 3084509, at *3 ("Different claim terms are presumed to have different meanings"); *Intel Corp. v. Qualcomm Inc.*, 21 F.4th 801, 810 (Fed. Cir. 2021) ("It is highly disfavored to construe terms in a way that renders them void, meaningless, or superfluous.); *Merck & Co. v. Teva Pharms. USA, Inc.*, 395 F.3d 1364, 1372 (Fed. Cir. 2005) ("A claim construction that gives meaning to all the terms of the claim is preferred over one that does not do so."). Since the evidence supports neither Cortex's plain and ordinary meaning nor its original construction, both should be rejected.

VI. TERM 2: "CREDENTIAL"

Visa's Construction	Cortex's Construction
"form of evidence or documentation that attests to an individual's identity or certifications, such as a driver's license or professional license"	No construction necessary

A. Visa's Construction Is Supported by the Intrinsic and Extrinsic Evidence

First, Visa's construction is consistent with the patentee's narrowing of the term "credential" during prosecution. On September 8, 2015, to address the examiner's rejection over prior art Ohara / Chu, the applicant amended Claim 1 of the '531 Patent by adding the limitation "*for proving the user's identity or qualifications*":

> Applicant respectfully asserts that neither Ohara nor Chu, taken either singly or in combination, teaches or suggests all of the elements of claim 1, as amended. . . .
>
> Nowhere in the descriptions of Ohara does there appear to be a discussion of "*generating an OVER file comprising a virtual representation of the credential*," wherein the credential is described as ***"proving the user's identity or qualifications,"*** as recited in claim 1.

Ex. 8 (9/7/2015 Amendment & ROA) at 14-17. The applicant further stated that since the other rejected claims "recite[] elements similar to claim 1," they should be allowed "for at least the reasons discussed in relation to claim 1." *Id.* at 20. It is thus clear from the prosecution history that the patentee intended to designate claim 1 as representative of all claims and to narrow the scope of credential with the addition of "proving the user's identity or qualifications" ***for all claims***.

Similarly, during prosecution of the '859 Patent, the applicant amended Claim 1 to add the limitation "for proving the user's identity or qualifications" to address the examiner's rejection over prior art Kang:

> These passages in Kang discuss obtaining an electronic document and using authentication methods to make sure that the user has authorization to obtain said document, but the electronic document itself is not **a credential of a user for proving the user's identity or qualifications**. Rather, it appears Kang expresses the electronic document like some kind of secure PDF. Furthermore, claim 1 has been amended to recite, "wherein said information is used to prove the user's identity or qualifications." The electronic document in Kang does not represent information that is used to prove the user's identity or qualifications.

Ex. 9 (3/16/2020 Amendment & ROA) at 10-11. Amendments to asserted claims during prosecution make them required elements for the purpose of claim construction. *See Littelfuse, Inc. v. Mersen USA EP Corp.*, 29 F.4th 1376, 1379-1381 (Fed. Cir. 2022). Visa's construction reflects this intent by including the phrase "that attests to an individual's identity or certifications." Dreifus Decl. ¶ 64.

Second, Visa's construction avoids the indefinite term "qualifications," *see infra* Section VII.A, and instead uses the term "certification," which connotes the issuance of a certification by an issuing agency, and is amply supported by the intrinsic evidence. For example, when the specification provides its list of exemplary credentials, it ends with "and any other credential that may be electronically verified by an ***issuing agency***." Cortex itself has emphasized the importance of the issuing agency as a key aspect of the invention not found in the prior art. *See, e.g.*, Ex. 10 ('531 POPR) at 6 ("Oborne lack[ed] any verification of the virtual representation of the credential by an issuing agency."). Therefore, the use of the word "certification" aptly captures the intended meaning of the term "credential." Dreifus Decl. ¶ 67.

Third, Visa's construction properly includes the exemplary credentials from the specification, while excluding forms of payment that the OVER file platform was never intended to store. *See* '531 Patent at 3:64-4:28 (discussing that credentials may be "a government issued identification such as a driver's license, non-driver's identification card, or professional license" or "privately issued credentials, such as, for example, employee identification cards, merchant loyalty cards, access cards, insurance credentials, transportation credentials, or any other credential that may be electronically verified by an issuing agency"). Visa's construction would capture driver's licenses and other identification cards that attest to an individual's identity. Dreifus Decl. ¶¶ 67-68. Visa's construction would capture employee identification cards that attest to an individual's identity and relationship to their employer, and merchant loyalty cards that are associated with a particular merchant. *Id.* Visa's construction would additionally capture insurance credentials, which often come in the form of an insurance ID card that attests to the policyholder's identity, or a certificate of insurance that attests to the policyholder's insurance coverage. *Id.* Visa's construction would also capture transportation credentials, such as, for example, a commercial driver's license, railway operator license, or maritime credentials that attest to an individual's ability to operate certain transportation modes or facilities. *Id.* In summary, Visa's construction accurately reflects that there are a variety of "credentials" and is consistent with the plain and ordinary meaning according to a POSITA at the time of the invention. *See* Dreifus Decl. ¶ 68.

At the same time, Visa's construction properly excludes forms of payment, like credit cards. As explained below, the patentee did not intend the OVER file platform to store credit cards. *See infra* at VI.B. Since a credit card—which from Visa's perspective is just an account number—cannot attest or prove an individual's identity or certifications, it is properly outside the scope of the term, and Visa's construction reflects this.

For all the above reasons, the Court should adopt Visa's construction for "credential." ECF No. 89, Ex. A.

CORTEX EX2012
Visa v. Cortex, IPR2024-00489
Page 13

B. Cortex Ignores Both the Intrinsic and Extrinsic Evidence When Proposing That No Construction Is Necessary for "Credential"

In asking for "no construction," Cortex aims to broaden the term "credential" to include Visa credit cards. *See, e.g,* FAC ¶ 62 ("The 'credential' is the user's Visa credit card, which proves the user's identity and qualification to make a purchase."). By doing so, Cortex ignores the full context of the claims, specification, and prosecution history, which collectively make clear that the patentee narrowed the meaning of "credential" to exclude subject matter that is unrelated to identity and certifications. *See Atlas IP, LLC v. Medtronic, Inc.*, 809 F.3d 599, 605 (Fed. Cir. 2015) ("[W]e generally give words of a claim their ordinary meaning in the context of the claim and the whole patent document; the specification particularly, but also the prosecution history, informs the determination of claim meaning in context.").

First, as discussed above the patentee affirmatively expressed his intent to define and narrow the term during prosecution. But Cortex's construction ignores the patentee's own narrowing. *See Littelfuse, Inc.*, 29 F.4th at 1379-1381.

Second, while the specification provides various exemplary credentials, not a single one is a credit card. *See* '531 Patent at Fig. 5, 3:64-4:6. The background section of the specification describes a "a wide-spread demand for monetary payments by digital transactions," but the focus is clearly on "credentials" like forms of ID, not payment:

> The rapid growth and evolution of traditional and electronic commerce markets has resulted in a wide-spread demand for monetary payments by digital transactions. However, currently payment systems are highly fragmented and insecure, which creates a threat of data compromise and theft during the transfer and use of electronic commerce data. This threat may result in losses for corporations as well as users of such systems, and these losses factor into escalating fees and client costs.
>
> Additionally, as more users move to a digital transaction model, the need for digital identification also increases. **As fewer users carry wallets or traditional payment forms, traditional forms of ID will become less common. Current platforms are insecure and carrying digital credentials increases the risk of identity theft or fraud in transactions. What is needed is secure system for storing and displaying user credentials.**

Id. at 1:23-39; *see also* Dreifus Decl. ¶ 69.

Indeed, consistent with the claim language, payment is actually described as a ***counterpart*** to credential in the Asserted Patents. This is clear from the specification's division of the virtual wallet into two separate platforms for the two different functions: (1) payment and (2) credential storage:

> The virtual wallet platform may provide an electronic platform for **payment *and* credential storage.** The virtual wallet platform 300 may provide electronic replacement for credit cards, cash, identification, or other cards traditionally carried in a wallet. In some embodiments, the virtual wallet platform may provide a **Reducing Currency Denomination (RCD) payment platform *and* an OVER File credential storage client 4**.

'531 Patent at 9:48-10:3; *see also* Dreifus Decl. ¶ 69. Figure 5 of the specification (below) illustrates a virtual wallet with these two different platforms. The screen in Figure 5 is currently displaying the home screen for the "CREDENTIAL" storage platform, as highlighted at the top right corner of the screen (annotated in red). The user can toggle to the home screen for the *separate* payment platform by selecting the "RCD" tab at the top left corner of the screen (annotated in green). *See* Dreifus Decl. ¶ 69.

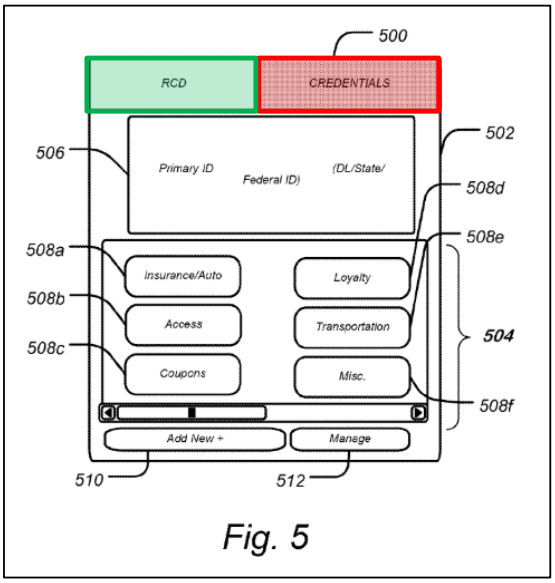

'531 Patent, Fig. 5

Nor does the specification provide any details of the payment platform. Instead, it states that such details are provided in a separate patent application—the '215 Appl. entitled "Systems, Methods, and Apparatuses for Secure Digital Transactions." '531 Patent at 9:66-10:3. A comparison of system diagrams from the '215 Appl. and the '531 Patent illustrates that the Asserted Patents are directed to a credential storage platform, while the '215 Appl. is directed to a payment platform:

CORTEX EX2012
Visa v. Cortex, IPR2024-00489
Page 15

'531 Patent "File Format and Platform for Storage and Verification of Credentials"	**'215 Patent Appl.** "Systems, Methods and Apparatuses for Secure Digital Transactions"
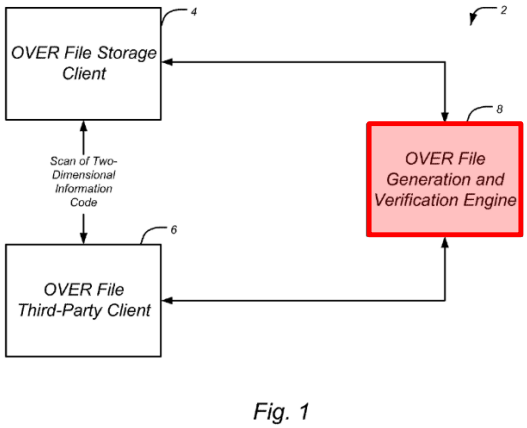 Fig. 1	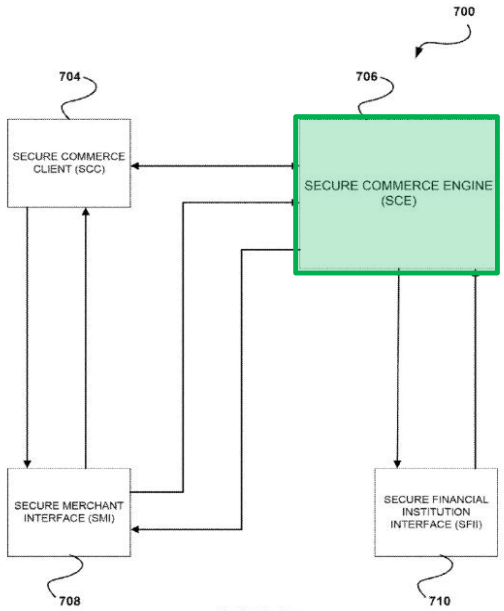 FIGURE 7

The key component of the Asserted Patents is the "OVER File Generation and Verification Engine" (annotated in red) for handling credentials, while the key component of the '215 Appl. is the "Secure Commerce Engine" (annotated in green) where credit card information is handled. *See* Dreifus Decl. ¶¶ 70-71.

Third, the extrinsic evidence draws a similar distinction between the "payment platform" and the "credential platform." For example, in its own documents from the time of the alleged inventions, Cortex describes the Cortex Platform [redacted]

[redacted]

[redacted]

Ex. 11 (Cortex 2012 Presentation at CORT0000015); Dreifus Decl. ¶¶ 72-73. This is a document that Cortex specifically identified in its infringement contentions as purported evidence that "Cortex has previously produced, sold, and release[d] products that incorporated the patented claims." Ex. 16 (Cortex's Infringement Contentions) at 8. In other words, even in Cortex's claimed embodying product, [redacted] *Id.* at CORT0000019, CORT0000021.

Finally, contrary to Cortex's allegations, credit cards do not prove the "user's identity and qualification to make a purchase." *See, e.g.*, FAC ¶ 62. A Visa credit card, which is identified by a 16-digital number, cannot prove an individual's identity because the same number can be assigned to multiple users, such as the primary account holder along with an authorized user. Dreifus Decl. ¶ 74. These 16-digital numbers are also used in connection with Visa prepaid cards, which can be shared and used by anyone. *Id.* A credit card number also cannot prove an individual's "qualification to make a purchase" because that decision (whether the individual can make a purchase) is made on a transaction-by-transaction basis. *Id*. For example, if a cardholder attempts to use a credit card to make a purchase that exceeds the cardholder's credit limit, that cardholder is not qualified to make the purchase and will be declined. *Id*. Proof of qualification is not based on the credit card number itself but the issuer's knowledge of the status of the account associated with that credit card number. *Id.*

As explained by Visa's expert, Mr. Dreifus, "saying that a credit card is a credential is contrary to both the patent specification and how a POSITA would interpret the meaning of 'credential' and 'payment' in the context of the specification." Dreifus Decl. ¶ 75; *see Wang Labs., Inc. v. Am. Online, Inc.*, 197 F.3d 1377, 1382 (Fed. Cir. 1999) (holding that a POSITA would not have interpreted the term "frame" to include "bit-mapped protocols" in the context of the specification). Accordingly, the Court should reject Cortex's proposal of "no construction necessary" and provide a construction for the term "credential" reflecting the patentee's intent to narrow its meaning for all claims. *See Phillips*, 415 F.3d at 1317.

VII. TERM 3: "QUALIFICATION"

Visa's Construction	Cortex's Construction
Indefinite	No construction necessary

Patent claims must particularly point out and distinctly claim the subject matter regarded as the invention. Pre-AIA 35 U.S.C. § 112 ¶ 2. Here, the term "qualifications" is indefinite because it fails to clearly define the claim scope. *Interval Licensing LLC v. AOL, Inc.*, 766 F.3d 1364, 1371 (Fed. Cir. 2014) (citing *Halliburton Energy Servs., Inc. v. M-I LLC*, 514 F.3d 1244, 1251 (Fed. Cir. 2008) ("The fact that [the patent holder] can articulate a definition supported by the

specification . . . does not end the inquiry. Even if a claim term's definition can be reduced to words, the claim is still indefinite if a person of ordinary skill in the art cannot translate the definition into meaningfully precise claim scope."). Importantly, the specification never actually uses the word "qualifications" nor explains how the term should be defined. At best, it provides a list of exemplary credentials, but it does not provide any clear relationship between these embodiments and the term "qualification." *See* Dreifus Decl. ¶ 79. The breadth of the types of credentials listed (*see, e.g.*, government-issued ID cards, membership cards, insurance documents, and transportation documents, *etc.*) only underscores the lack of clarity or distinction between those credentials that prove identity and those that prove qualifications. *See, e.g.*, Op. Br. 5 (listing "many types of exemplar credentials"); Dreifus Decl. ¶ 79. Given that only "exemplar" credentials were listed, it is impossible for a POSITA to determine what other documents could be considered credentials that prove a user's qualifications. *Id.* Because the objective boundaries of the term "qualification" cannot be determined from the specification alone, the term is indefinite. *See* Dreifus Decl. ¶¶ 79-84; *see also Star Sci., Inc. v. R.J. Reynolds Tobacco Co.*, 655 F.3d 1364, 1380 (Fed. Cir. 2011) (holding that expert testimony may be helpful in determining whether a term is indefinite.).

The prosecution history provides no further clarity. While amending claims to overcome prior art, the patentee added, among other things, the limitation "proving the user's identity or qualifications." *See* Ex**.** 8 (9/7/2015 Amendment and ROA) at 11-12. As support for this amendment, the patentee simply pointed to a driver's license being issued by the DMV. There is no dispute that a driver's license is a credential that is designed to prove a user's identity and certification to drive. But this example provides no guidance as to other ambiguous "credentials" listed in the patent. For example, "transportation credentials" ('531 Patent at 10:25) could be referring to documentation issued by a certifying agency, like a DMV or a national aviation authority, that proves the individual has met specific requirements to operate certain types of transportation. Dreifus Decl. ¶ 82. However, "transportation credentials" could also refer to other types of transportation documents, like transit passes or train tickets. *Id.* These latter types of transportation documents are normally used for proof of payment and not to prove any specific

CORTEX EX2012
Visa v. Cortex, IPR2024-00489
Page 19

certification about the user. *Id*. Thus, even if the term "qualifications" was intended by the patentee to be used in conjunction with specific embodiments (which is not at all clear since the term never appears in the specification), that alone does not resolve the indefiniteness of the term. *See AOL, Inc.*, 766 F.3d at 1372-1373 (Fed. Cir. 2014) (holding that the term "unobtrusive manner" was indefinite even though specification used it in conjunction with one embodiment).

Cortex's reliance on plain and ordinary meaning adds further confusion. Cortex argues that the plain and ordinary meaning of "qualification" is "a user's attributes such as their privileges or attained skills, as opposed to their identity." *See* Op. Br. at 11. But neither "privilege" nor "attained skills" is found anywhere in the specification or the claim language. Moreover, "qualifications" being a mere "privilege" is inconsistent with the prosecution history. To overcome a rejection by the patent examiner, the patentee distinguished the claimed invention from Ohara, which describes an "electronic document creating device" for creating new documents and "prevent[ing] operation by a user who has *no permission*." *See* Ex. 12 (Ohara) at Abstract; Ex. 8 (9/7/2015 Amendment and ROA) at 16-17. From the perspective of a POSITA, having access rights or permission to create a document is often called having create/write "privileges." Dreifus Decl. ¶ 83. Yet the patentee explicitly argued that Ohara did not disclose a "credential for proving a user's identity or qualifications." Thus, Cortex's plain and ordinary meaning is inconsistent with the intrinsic evidence, fails to provide the necessary clarity and specificity, and leaves key terms undefined.

VIII. TERM 4: "A VIRTUAL REPRESENTATION THAT HAS BEEN VERIFIED BY AN ISSUING AGENCY TO BE AN OFFICIAL REPRESENTATION OF THE CREDENTIAL"

Visa's Construction	Cortex's Construction
"a [first/second] virtual representation of the [original] credential, where the virtual representation has been verified by [an/the] issuing agency to be [an/a] [first/second] official representation of the [original] credential."	No construction necessary

A. Visa's Construction Is Consistent with the Intrinsic and Extrinsic Evidence

Visa offers its construction to clarify that the phrase "that has been verified by an issuing agency to be an official representation of the credential" is intended to modify "virtual

representation" and not "credential." In other words, the claim language requires that the issuing agency has verified the "**virtual representation**" (and not the "credential") to be an "official representation of the credential." By disputing Visa's construction, Cortex's position appears to be the alternative interpretation, which is that the issuing agency simply has to verify that the "credential" is an official representation of the credential.

Visa's proposed construction is consistent with the intrinsic evidence. The specification repeatedly mentions that the issuing agency verifies the OVER file, which according to the claim language, "compris[es] a virtual representation of the credential." '531 Patent at cl. 1. For example, the "OVER File database 828 may be in contact **with an issuing agency** database 830 to periodically update the **validity and status of the OVER Files** stored in the OVER File database 828." *Id*. 13:61-14-33; *see also id.* at 4:25-41 (maintaining status indicator "to indicate whether the OVER File credential is currently valid"), 6:12-36 (information contained in OVER File may be verified by "an issuing agency datastore"). The specification never once mentions that a ***credential*** has been verified by the issuing agency. *See* Dreifus Decl. ¶ 87.

Visa's proposed construction is also consistent with the prosecution history. As admitted by Cortex:

> During examination, the Examiner thoroughly vetted Cortex's application by conducting two rounds of searches, issuing two sets of rejections, and engaging in two interviews with Cortex. The Examiner urged Cortex to amend its claims to add a distinction between the 'issuing agency' and the "third party" device in Cortex's platform. EX1007 at 53. Cortex amended its claims to obtain allowance. The Examiner explained that she allowed the claims because the "closest prior art of record, Ohara and Chu," did not teach an OVER file with "a virtual representation of the credential that has been verified by an issuing agency." *Id.* at 20.
>
> The petition presents nothing contradicting the Examiner's finding. **Visa's references also fail to render obvious the '531 Patent, including because they do not teach or suggest verification of the "virtual representation" of a credential by an issuing agency.**

Ex. 10 ('531 POPR) at 4-5 (quoting Ex. 15 ('531 Patent 9/30/2015 Notice of Allowability) at 2); Ex. 8 ('531 Patent 9/7/2015 Amendment and ROA) at 16-17; Ex. 13 ('531 Patent 8/25/2015 Applicant-Initiated Interview Summary, Agenda) at 2. Thus, both Cortex and the Examiner's statements confirm that Visa's construction is correct. *See* Dreifus Decl. ¶¶ 86, 88; *see also Kaken*

Pharm. Co. v. Iancu, 952 F.3d 1346, 1352-53 (Fed. Cir. 2020) ("[t]he prosecution history . . . provides decisive supports for limiting the claim phrase at issue"); *see also Sequoia Tech., LLC v. Dell, Inc.*, 66 F.4th 1317, 1327 (Fed. Cir. 2023) ("statements made by a patent owner during an IPR proceeding, whether before or after an institution decision, can be considered for claim construction").

As explained by Mr. Dreifus, "[a] construction that leaves open the possibility that the issuer must verify only the *credential*, rather than the virtual representation, is incorrect and illogical." Dreifus Decl. ¶ 90. By contrast, it is an entirely sensible interpretation for the issuing agency to verify the virtual representation to be an official representation. *Id.* ¶ 91. Accordingly, Visa's construction should be adopted.

B. The Term "Virtual Representation…" Is a Significant Term That Should Be Construed by the Court

Although this term was not mutually identified as a "most" significant term in the Joint Claim Construction and Prehearing Statement, its importance for both issues of infringement and invalidity has become evident with the progression of the case and the IPR proceedings. In the IPR proceedings, Cortex itself identified this claim element as a key aspect of the invention distinguishing it from the prior art. For example, Cortex admits that it amended its claims to add the term to overcome prior art during prosecution. Ex. 10 ('531 POPR) at 4-5 ("Cortex amended its claims to obtain allowance. The Examiner explained that she allowed the claims because the 'closest prior art of record, Ohara and Chu,' did not teach an OVER file with 'a virtual representation of the credential that has been verified by an issuing agency.'"). Cortex also argues that the prior art identified by Visa—'992 Oborne—does not disclose this claim element because the issuing agency must verify the credential. *Id.* at 22-23 ("Oborne did not disclose verification by an issuing agency. . . .These paragraphs do not describe an issuing agency (for example, a bank) that issued a credential, but refer instead to the entity that issued the token…."). That particular prior art reference—'992 Oborne—is a Visa patent application that also describes a system similar to the accused Visa Token Service technology. Therefore, depending on the construction of this term, Visa may have dispositive invalidity and non-infringement defenses against Cortex's allegations.

Cortex has had ample notice of Visa's proposed claim construction and of Visa's position that the term should be briefed and construed by the Court. On May 14, 2024, which was over a month prior to Cortex filing its Opening Brief, Visa served the Expert Report of Henry Dreifus, which set forth evidence in support of Visa's construction. When the parties discussed terms to be briefed, Visa again identified this term as critical for construction.

Because this is a significant and case dispositive term, the Court should construe this term.

IX. CONCLUSION

For the foregoing reasons, Visa respectfully submits that its proposed constructions be adopted.

Respectfully submitted,

By: WILSON SONSINI GOODRICH & ROSATI Professional Corporation

DATED: July 12, 2024

/s/ Lucy Yen

James C. Yoon, State Bar No. 177155
(jyoon@wsgr.com)
Catherine R. Lacey, State Bar No. 291591
(clacey@wsgr.com)
WILSON SONSINI GOODRICH & ROSATI, P.C.
650 Page Mill Rd
Palo Alto, CA 94304-1050
Tel: 650-493-9300

Lucy Yen, State Bar No. 224559
(lyen@wsgr.com)
WILSON SONSINI GOODRICH & ROSATI, P.C.
1301 Avenue of the Americas
40th Floor
New York, NY 10019
Tel: 212-999-5800

Jamie Y. Otto, State Bar No. 295099
(jotto@wsgr.com)
Jiayue He, State Bar No. 345579
(jhe@wsgr.com)
WILSON SONSINI GOODRICH & ROSATI, P.C.
953 East Third Street, Suite 100|
Los Angeles, CA 90013
Tel: 323-210-2900

Attorneys for Defendant Visa Inc.

CERTIFICATE OF SERVICE

The undersigned, an attorney, hereby certifies that a true and correct copy of the foregoing documents were served on all counsel of record via CM/ECF electronic mail.

Dated: July 12, 2024

By: /s/ *Lucy Yen*

Lucy Yen (*pro hac vice*)
lyen@wsgr.com
WILSON SONSINI GOODRICH & ROSATI