US 20100259028A1

(19) United States

(12) Patent Application Publication

Moechnig

(10) Pub. No.: US 2010/0259028 A1

(43) Pub. Date: Oct. 14, 2010

(54) BICYCLE WITH ASYMMETRIC STEERER TUBE

(76) Inventor: Steven Moechnig, Madison, WI (US)

Correspondence Address:
BOYLE FREDRICKSON S.C.
840 North Plankinton Avenue
MILWAUKEE, WI 53203 (US)

(21) Appl. No.: 12/420,881

(22) Filed: Apr. 9, 2009

Publication Classification

(51) Int. Cl.
B62K 3/02 (2006.01)

(52) U.S. Cl. 280/279

(57) ABSTRACT

A bicycle steerer tube assembly having an oblong asymmetric cross section formed along a portion of the steerer tube. The asymmetric portion of the steerer tube has a first diameter that is generally aligned with an axis of rotation of the front wheel and a second diameter that is generally aligned with a plane of rotation of the front wheel. The first diameter is greater than the second diameter and provides lateral stiffness to the wheel assembly and the second diameter accommodates longitudinal impact absorption of the fork and wheel assembly.

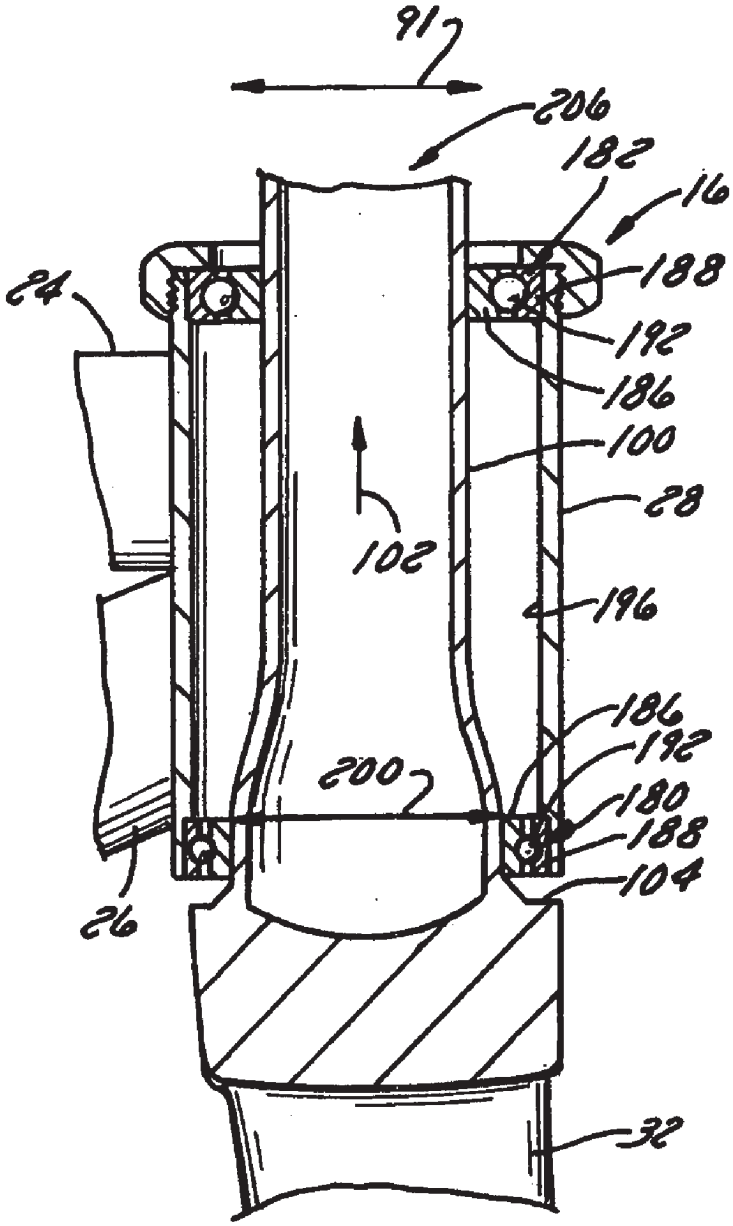

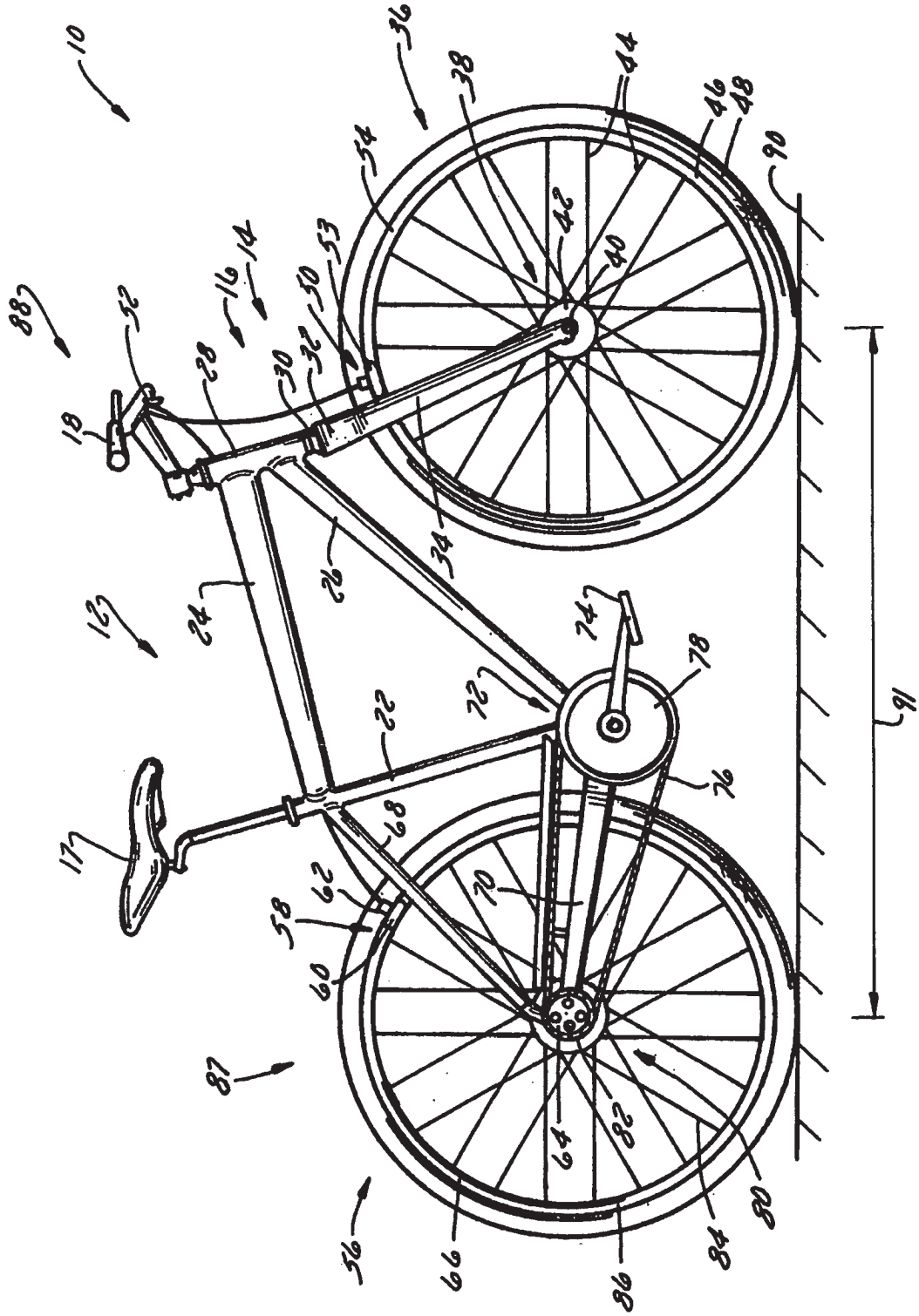
10
12
14
16
18
20
22
24
26
28
30
32
34
36
38
40
42
44
46
48
50
52
54
56
58
60
62
64
66
68
70
72
74
76
78
80
82
84
86
87
88
90
91

FIG. 1

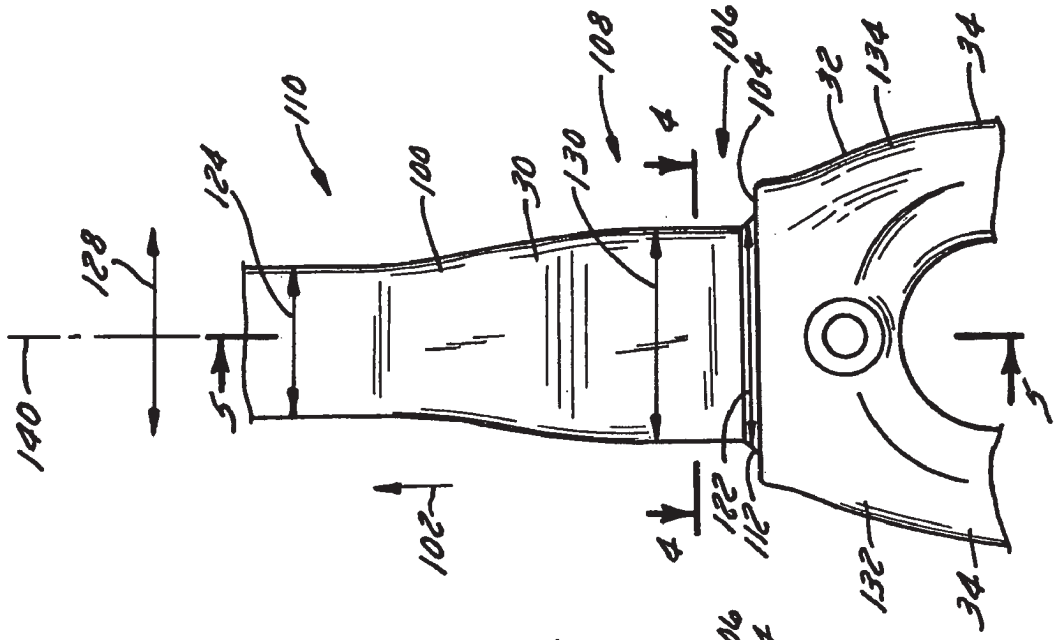
140
128
124
110
100
30
130
108
4
106
104
32
134
34
5
102
122
112
132

FIG. 3

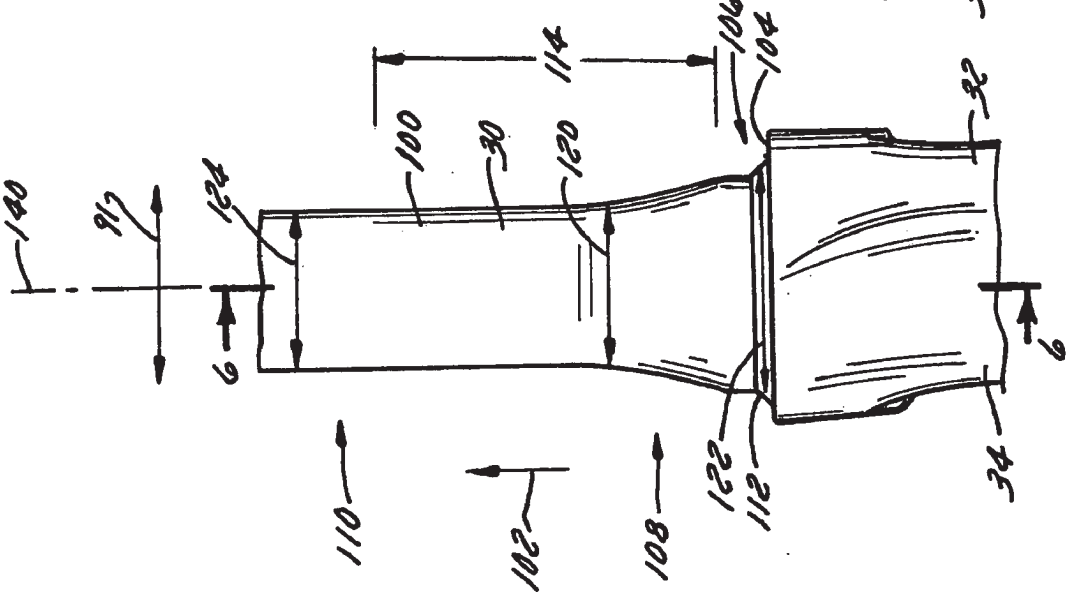
140
9½
124
6
100
30
120
114
106
104
32
110
102
108
122
112
34

FIG. 2

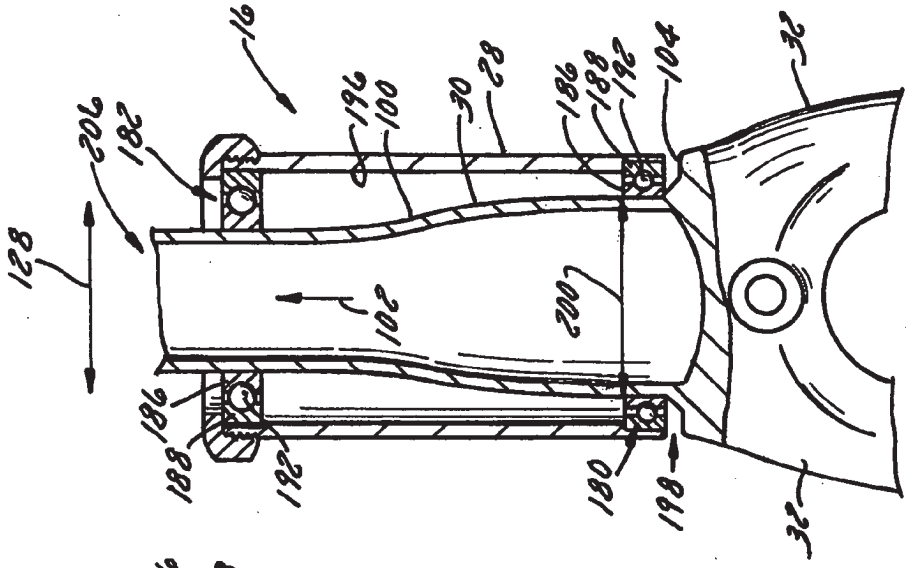

FIG. 6

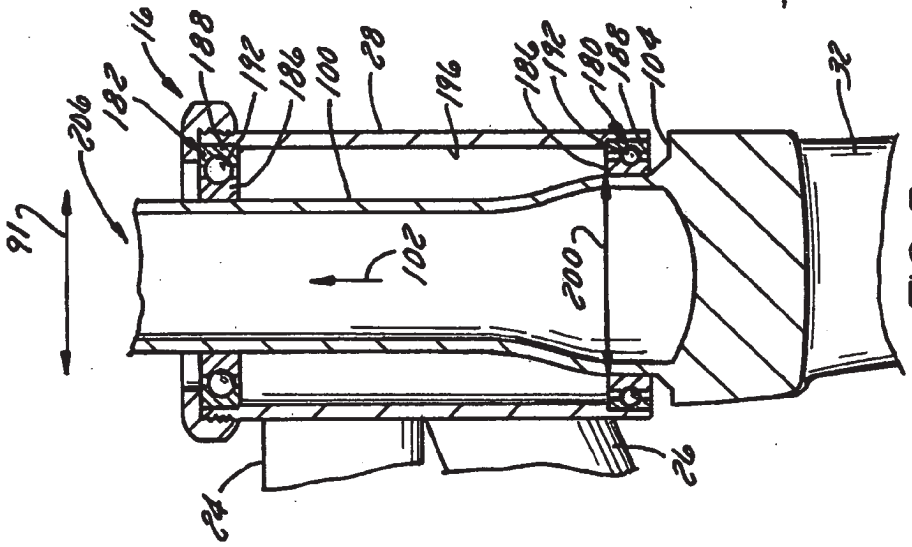

FIG. 5

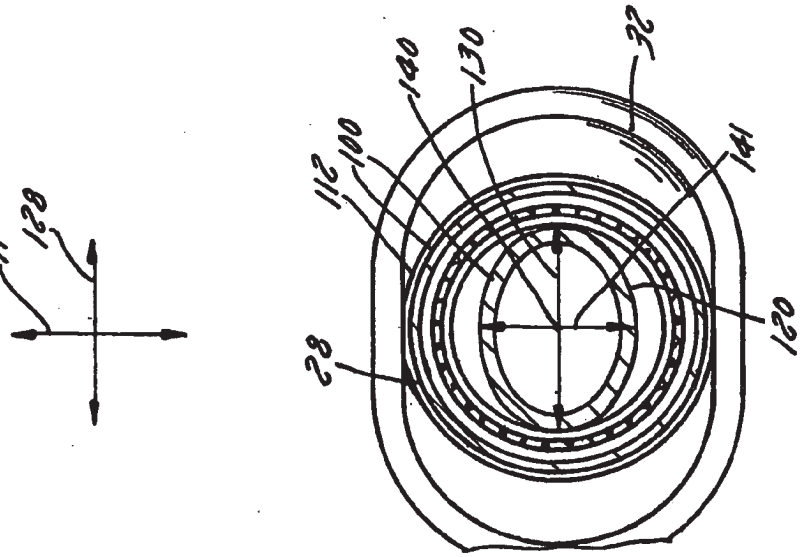

FIG. 4

BICYCLE WITH ASYMMETRIC STEERER TUBE

BACKGROUND OF THE INVENTION

[0001] The present invention relates generally to bicycles and, more particularly, to a lightweight steerer tube and head tube assembly that provide improved handling and comfort performance.

[0002] A typical fork or steerer assembly generally includes a fork crown that cooperates with a pair of downward extending legs. A steerer tube extends in an upward direction from the fork crown and cooperates with a head tube of a bicycle frame. The steerer tube can be integrally formed with one or more of the fork crown and forks or the steerer tube and fork crown can be constructed with mating securing structures, such as geometric, threaded, and/or bonded connections. Regardless of the specific construction, the steerer tube is commonly centrally positioned relative to the fork crown and is secured to the fork crown so as to extend in a direction generally opposite the pair of fork legs.

[0003] The steerer tube, fork crown, and fork legs can be constructed of any of aluminum or metal-type materials, composite materials, and/or carbon based materials such as carbon fiber material and/or a glass fiber material. A stem and handlebar are commonly engaged with the steerer tube such that the head tube of the bicycle frame is captured between the stem/handlebar and the fork crown. A number of rolling support elements, such as bearings, are commonly disposed between the head tube and the steerer tube and facilitate generally smooth rotational movement of the steerer assembly relative to the bicycle frame.

[0004] A front wheel is commonly disposed between the fork legs and supports the forward portion of the bicycle. Although a portion of the loading imparted to the front wheel during use of the bicycle is absorbed by flexure of the respective portions of the steerer assembly, a majority of the front wheel load is communicated to the bicycle frame through the interaction of the steerer tube and the head tube. A portion of this loading is communicated to the rider through their interaction with the handlebars. Rider steering inputs are communicated in a generally reverse direction from the handlebars and through the steerer assembly to effectuate a desired turning operation. The communication of the impact and steering forces through the steerer assembly directly affects ride experience.

[0005] During riding, although the front wheel can be subjected to loading in a variety of radial directions, these loading are commonly directed in a longitudinal and a lateral direction. As used herein, the longitudinal direction generally refers to directions aligned with a longitudinal axis or a direction of travel of the bicycle. Understandably, the longitudinal direction includes both generally forward and generally rearward directions, or the fore and aft directions, relative to the longitudinal axis of the bicycle. The lateral directions refer to the generally right and generally left directions relative to the longitudinal axis of the bicycle. That is, the generally opposite left and right sides of the bicycle as compared to the forward and rearward portions of the bicycle.

[0006] Many riders' associate bicycle handling performance with the responsiveness of the front wheel assembly to steering inputs. The laterally oriented interaction between the steerer tube and the head tube is largely associated with the rider's perception of handling performance. Improved handling performance can be attained with increased lateral stiffness of the steering assembly. Said in another way, increasing the lateral stiffness of the steerer assembly provides a steering system that is more responsive to steering inputs.

[0007] Others have provided bicycles with a desired degree of steering responsiveness. Such systems include a larger diameter bearing support between the steerer tube and the head tube. Such a configuration offsets the lateral support in a direction laterally outboard of the longitudinal axis of the steering assembly. Unfortunately, such an approach has several detrimental effects on the overall construction of the bicycle and steerer assembly.

[0008] Such assemblies increase the size and mass of the respective components of the steering assembly thereby undesirably increasing the weight of the bicycle. Furthermore, such a configuration increases the rigidity of the steerer assembly in a generally radially uniform manner. That is, in addition to increasing the rigidity of the steerer assembly in the opposite lateral directions, such an approach also undesirably increase the rigidity in the generally opposite fore and aft directions. The increase in the fore and aft rigidity of the steerer assembly detrimentally affects the fore and aft stiffness performance of the steering assembly by communicating greater amounts of the fore and aft directed loading of the front wheel to the rider. As such, such systems adversely affect rider comfort by communicating a greater amount of road bumps and/or impacts to the hands of the rider.

[0009] Therefore, it would be desirable to have a steerer assembly with improved lateral and fore and aft stiffness performance. It is further desired to provide steerer assembly that can be efficiently and repeatably produced and is robust and lightweight.

BRIEF DESCRIPTION OF THE INVENTION

[0010] The present invention provides a steerer tube and method of supporting a steerer tube that overcomes one or more of the aforementioned drawbacks. A bicycle steerer tube in accordance with one aspect of the invention includes an oblong asymmetric cross section that is formed along a portion of the steerer tube. The asymmetric portion of the steerer tube has a first diameter that is generally aligned with an axis of rotation of the front wheel and a second diameter that is generally aligned with a plane of rotation of the front wheel. The first diameter is greater than the second diameter and provides lateral stiffness to the wheel assembly and the second diameter accommodates longitudinal impact absorption of the fork and wheel assembly.

[0011] Another aspect of the invention useable with one or more of the features of the above aspect discloses a bicycle steerer tube that includes a body having a first end that extends from a fork crown and a second end that extends toward a handlebar of a bicycle. The body of the steerer tube includes an asymmetric cross section that is formed between the first end and the second end and that is configured to be received in a head tube of the bicycle. The asymmetric cross section has a first diameter that is greater than a second diameter. The first diameter is oriented to be aligned with a pair of fork legs positioned on generally opposite ends of the fork crown and the second diameter is oriented to be generally transverse to the first diameter.

[0012] Another aspect of the invention that can be combined with one or more of the features of the above aspects discloses a bicycle assembly having a frame assembly that includes a seat tube and a head tube. The seat tube and the head tube are separated along a longitudinal axis of the frame

assembly. A fork crown is positioned generally beneath the head tube and a pair of forks extends in a downward direction from generally opposite lateral sides of the fork crown. A steerer tube extends upward from the fork crown and into the head tube and includes a portion with an oblong cross section. The oblong cross section has a long axis that is oriented in a direction that is generally transverse to the longitudinal axis when the pair of forks are symmetrically positioned relative to the longitudinal axis.

[0013] Another aspect of the invention useable with one or more of the features of the above aspects discloses a method of supporting a bicycle steerer tube. A steerer tube body is provided that is shaped to cooperate with a head tube of a bicycle frame. A portion of the steerer tube body that is supported by the head tube is shaped to have a non-circular oblong cross section with a short axis aligned with a longitudinal axis of the bicycle frame and a long axis transverse to the short axis.

[0014] Another aspect of the invention useable with one or more of the features disclosed above includes forming the fork crown and the steerer tube from the same material. Preferably, the steerer tube according to one of more of the above aspects is formed of a carbon fiber material. More preferably, a fork crown is formed integrally with the steerer tube.

[0015] Another preferred aspect to the invention useable with one or more of the above aspects includes tapering the steerer tube from an end proximate the fork crown to a remote end. Another preferred aspect of the invention includes disposing the asymmetric, oblong, eccentric, or non-circular portion of the steerer tube between radially symmetric portions of the steerer tube. Preferably, the symmetric portion of the steerer tube that is remote from the fork crown extends a greater length of the steerer tube than the symmetric portion that is more proximate the fork crown and accommodates cooperation of the steerer tube with bicycle frame head tubes having different lengths.

[0016] These and various other features and aspects of the present invention will be made apparent from the following detailed description and the drawings.

BRIEF DESCRIPTION OF THE DRAWINGS

[0017] The drawings illustrate one preferred embodiment presently contemplated for carrying out the invention.

[0018] In the drawings:

[0019] FIG. **1** is an elevational view of the bicycle equipped with a steerer assembly according to the present invention;

[0020] FIG. **2** is a lateral side elevation view of the steerer assembly removed from the bicycle of FIG. **1**;

[0021] FIG. **3** is a front side elevation view of the steerer assembly shown in FIG. **2**;

[0022] FIG. **4** is a cross section view of the steerer assembly taken along line **4-4** shown in FIGS. **3** and **4**;

[0023] FIG. **5** is a longitudinally oriented cross section view of the steerer tube and head tube assembly along line **5-5** shown in FIG. **3**; and

[0024] FIG. **6** is a laterally oriented cross section view of the steerer tube and head tube assembly along line **6-6** shown in FIG. **2**.

DETAILED DESCRIPTION OF THE PREFERRED EMBODIMENT

[0025] FIG. **1** shows a bicycle **10** having a frame **12** constructed to accommodate a fork assembly **14**. Fork assembly **14** is supported by a steerer assembly **16** according to the present invention. Bicycle **10** includes a seat **17** attached to a seat post **20** that slidably cooperates with a seat tube **22** of frame **12**. A handlebar **18** is positioned forward of seat **17** and is connected to steerer assembly **16** such that rotation of handlebar **18** rotates steerer assembly **16** relative to frame **12**.

[0026] Frame **12** includes a top tube **24** and a down tube **26** that extend forwardly from generally opposite ends of seat tube **22** to a head tube **28** of frame **12**. Handlebars **18** are connected to a stem or steerer tube **30** that passes through head tube **28** and is rotationally supported thereby. A fork crown **32** extends in a downward direction relative to head tube **28** and is constructed to form or support a pair of forks, fork blades or fork legs **34** that generally flank a front wheel assembly **36**. Handlebar **18** may include a stem that is constructed to slidably engage an interior cavity of steerer tube **30**.

[0027] Steerer tube **30** and fork crown **32** can be formed of a number of materials such as metal-type materials, such as aluminum, carbon-type materials, such as carbon fiber materials and/or composites, or combinations thereof. Steerer tube **30** may be secured to fork crown **32** or may be formed integrally therewith. Preferably, steerer tube **30** and fork crown **32** are formed of a carbon fiber material as one-piece. Regardless of the specific construction and configuration, and as described further below with respect to FIGS. **2-7**, handlebar **18** is attached to bicycle **10** such that rotation of handlebar **18** rotates fork crown **32** about a longitudinal axis of steerer tube **30** and/or head tube **28**.

[0028] Fork legs **34** extend from generally opposite lateral sides of fork crown **32** and are constructed to support front wheel assembly **36** at an end thereof or dropout assembly **38**. Dropout assemblies **38** engage generally opposite sides of an axle **40** that is engaged with a hub **42** of front wheel assembly **36**. A number of spokes **44** extend from hub **42** to a rim **46** of front wheel assembly **36**. A tire **48** is engaged with rim **46** such that hub **42**, rim **46**, and tire **48** rotate in unison relative to fork legs **34**.

[0029] Bicycle **10** includes a front brake assembly **50** having an actuator **52** attached to handlebars **18** and a pair of brake pads **53** positioned on generally opposite sides of front wheel assembly **36**. Brake pads **53** are constructed to engage a brake wall **54** of rim **46** thereby providing a stopping or slowing force to front wheel assembly **36**. Bicycle **10** includes a rear wheel assembly **56** that is also equipped with a brake assembly **58**. Brake assembly **58** includes a pair of brake pads **60** that are manipulated by a caliper **62** that extends about generally opposite lateral sides of a rear wheel **66** of rear wheel assembly **56**.

[0030] Rear wheel **66** is supported by a rear axle **64**. Rear wheel brake assembly **58** interacts with rear wheel **66** in a manner similar to the association of front brake assembly **50** and front wheel assembly **36**. Brake assemblies **50**, **58** are merely exemplary of one brake assembly useable with the present invention. It is appreciated that either or both of front and rear wheel assemblies **36**, **56** could be provided with other braking arrangements such as disc brake assemblies.

[0031] A seat stay **68** and a chain stay **70** offset rear axle **64** from a crankset **72**. Crankset **72** includes a set of pedals **74** that is operationally connected to an endless drive such as a chain **76** via a gear set, chain ring, or sprocket **78**. Rotation of chain **76** communicates a drive force to a gear cluster **80** positioned proximate rear axle **64**. Gear cluster **80** is gener-

ally concentrically orientated with respect to rear axle **64** and includes a number of variable diameter gears.

[0032] Gear cluster **80** is operationally connected to a hub **82** of rear wheel **66**. A number of spokes **84** extend radially between hub **82** and a rim **86** of rear wheel **66** of rear wheel assembly **56**. As is commonly understood, rider operation of pedals **74** drives chain **76** thereby driving rear wheel **66** which in turn propels bicycle **10**. Whereas rear wheel assembly **56** supports an aft or rearward end or portion **87** of bicycle **10**, fork assembly **14** is constructed to support a forward end or portion **88** of bicycle **10** above a ground surface **90**. Handlebar **18** is connected to frame **12** and fork assembly **14** via steerer assembly **16** such that operator manipulation of handlebar **18** is communicated to fork assembly **14** so as to turn, rotate, or pivot front wheel assembly **36** relative to frame **12** with respect to a longitudinal direction or axis, indicated by arrow **91**, of bicycle **10**. As is commonly understood, such manipulation of handlebar **18** steers bicycle **10** during riding.

[0033] It is appreciated that the construction of bicycle **10** shown in FIG. **1** is merely exemplary of a number of bicycle configurations. That is, whereas bicycle **10** is shown as what is commonly understood as a street or road bike, it is appreciated that a steerer assembly according to the present invention is applicable to other bicycle configurations such as mountain and/or dirt bike. It is further appreciated that the present invention is useable with bicycles having structures and/or features that differ from the specific construction disclosed above.

[0034] FIGS. **2** and **3** show steerer tube **30** removed from bicycle **10**. Steerer tube **30** includes a body **100** that extends in an upward direction, indicated by arrow **102**, relative to a top or upper surface **104** of fork crown **32**. Preferably, body **100** includes an integral or inseparable steerer tube **30** and fork crown **32**. Alternatively, it is envisioned that steerer tube **30** and fork crown **32** include overlapping portions or be otherwise configured to be secured to one another. As used herein, steerer tube **30** is that portion of steerer assembly **16** that extends in an upward direction relative to fork crown **32** and is configured to cooperate with head tube **28** so as to rotationally secure steerer assembly **16** to bicycle frame **12**.

[0035] Steerer tube **30** of body **100** includes a first or lower radial portion **106**, a radially asymmetric portion **108**, and a second or upper radial portion **110**. Lower radial portion **106** is generally adjacent upper surface **104** of fork crown **32** and includes a chamfer **112** that extends radially about steerer tube **30**. Radially asymmetric portion **108** begins at or near chamfer **112** and extends a portion **114** of the overall length of steerer tube **30**. Radially asymmetric portion **114** tapers inward relative to a longitudinal axis **140**, indicated by the intersection of longitudinal and lateral diameters **120**, **130** as shown in FIG. **4**, of body **100** as it extends from lower radial portion **106** toward upper radial portion **110**.

[0036] Referring to FIGS. **2** and **4**, a longitudinal diameter, indicated by arrow **120**, of steerer tube **30** gradually reduces from a diameter, indicated by arrow **122**, associated with lower radial portion **106** to a diameter, indicated by arrow **124**, associated with upper radial portion **110**. FIGS. **3** and **4** show a lateral orientation, indicated by arrow **128**, of steerer tube **30** relative to bicycle **10**. The lateral orientation of steerer tube **30** is associated with the generally aligned orientation of alternate arms **132**, **134** of fork crown **32**.

[0037] Each of arms **132**, **134** of crown **32** is oriented to cooperate with a respective fork leg **34**. Fork legs **34** can be bonded or otherwise attached to arms **132**, **134**. One such construction is disclosed in Applicant's copending Patent Application Publication No. 2008/0303240 entitled "Bicycle Fork Assembly With Integral Crown and Steer Tube." The disclosure of which is incorporated herein. Alternatively, fork legs **34** may be formed integrally with steerer tube **30** and fork crown **32**. Regardless of the particular construction modality and as is commonly understood, forks **34** extend in a downward direction from arms **132**, **134** of crown **32** and are positioned to generally flank front wheel assembly **36**.

[0038] Referring to FIGS. **3** and **4**, body **100** includes a lateral diameter, indicated by arrow **130**, that transitions from first radial portion **106** to upper radial portion **110**. As compared to longitudinal diameter **120**, lateral diameter **130** is maintained at a value that more nearly approximates the radial diameter **122** associated with lower radial portion **106** for a greater distance from upper surface **104** of fork crown **32**. Both longitudinal and lateral diameters **120**, **130** transition from lower radial portion **106** to upper radial portion **110**. Comparing FIGS. **2** and **3**, it can be seen that the rate of change of longitudinal diameter **120** at locations more proximate upper surface **104** of fork crown **32** is greater than the rate of change of lateral diameter **130** along the same portion of a longitudinal axis, indicated by arrow **140**, of steerer tube body **100**. Said in another way, the lateral diameter of steerer tube **30** is wider than the longitudinal diameter of the steerer tube **30** as body **100** transitions from the lower radial portion **106** to the upper radial portion **110**. Preferably, for each cross section of body **100** that is perpendicular to the longitudinal axis **140** of steerer tube **30**, lateral diameter **130** is larger than longitudinal diameter **120**.

[0039] Referring to FIGS. **2-4**, upper surface **104** of fork crown **32** and chamfer **112** are generally radially symmetric with respect to longitudinal axis **140** of steerer tube **30**. Lateral diameter **130** of body **100** is tapered or gradually reduces from diameter **122** associated with chamfer **112** to diameter **124** associated with the upper radial portion **110**. Similarly, longitudinal diameter **120** also gradually reduces such that steerer tube **30** is tapers inward toward axis **140** as it extends in direction **102** away from upper surface **104** of fork crown **32**. One exemplary shape of steerer tube **30** has smallest longitudinal diameter that is approximately 70-75% of a widest lateral diameter of steerer tube **30**. It is appreciated that such a ratio is merely exemplary and the present invention may be provided in virtually any ratio where the longitudinal diameter of the steerer tube is less than the lateral diameter of the steerer tube.

[0040] As best shown in FIG. **4**, steerer tube **30** includes a number of cross-sections **141** along asymmetric portion **108** that are radially asymmetric but bilaterally symmetric along each of the longitudinal axis **91**, **128**. Such a construction provides that each cross-section **141** along asymmetric portion **108** has an oblong, non-circular, and radially asymmetric shape. Furthermore, along axial length associated with axis **140**, each cross-section **141** includes a lateral diameter **130** that is larger than a longitudinal diameter **120**. Preferably, longitudinal diameter **120** is not less than a diameter associated with upper radial portion **110**. Although upper radial portion **110** could be provided in any of a number of sizes, upper radial portion **110** preferably has a diameter of about 1.125 inches or about 28.6 mm. Similarly, although lateral diameter **130** tapers from lower radial portion **106** to upper radial portion **110**, and could be provided in a number of sizes, at it's widest portion, lateral diameter **130** is approximately 1.559 inches or 39.6 mm, and is about the same as the

diameter of lower radial portion **130**. Lateral diameter **130** is commonly colloquially referenced as having a one and one half inch diameter although the actual dimension of lateral diameter **130** is commonly slightly larger. It is appreciated however that the values provided above are merely exemplary values. As described below with respect to FIGS. **5** and **6**, such a construction allows for fore and aft movement of flexure of fork assembly **14** while providing fairly robust lateral support in side to side directions commonly associated with lateral axis **128**.

[0041] It is further appreciated that, during turning operations, longitudinal diameter **120** and lateral diameter **130** of steerer tube **30** rotate about the longitudinal axis **140** of steerer tube **30** relative to head tube **28** of bicycle **10**. The orientation of lateral and longitudinal diameters **120**, **130** remain aligned with the longitudinal and lateral loading of fork assembly **14** with respect the to the front wheel assembly **36**. Said in another way, lateral diameter **130** remains oriented to be aligned with lateral loading of wheel assembly **36** and longitudinal diameter **120** remains oriented to be aligned with longitudinal loading of wheel assembly **36**. The benefits of such an orientation is described further below with respect to the performance characteristics provided by steerer assembly **16**.

[0042] FIGS. **5** and **6** are elevation cross section views of steerer assembly **16** in the longitudinal and lateral directions **91**, **128**, respectively. A lower bearing **180** and an upper bearing **182** are disposed between body **100** and head tube **28** of bicycle **10**. Bearings **180**, **182** provide rotatable support at the generally opposite ends of steerer tube **30**. Each of lower and upper bearings **180**, **182** include an inner member **186**, an outer member **188**, and a number of roller elements **192** that are disposed therebetween. It is appreciated that one or both of the inner members **186** of upper and lower bearing **180**, **192** could be integrally formed with body **100** of steerer tube **30**. It is similarly appreciated that the outer members **188** one or both of upper and lower bearings **180**, **182** could be formed integrally with respect to an inner surface **196** of head tube **28**.

[0043] The inner member **186** of lower bearing **180** seats upon chamfer **112** and outer member **188** of lower bearing **186** cooperates with head tube **28** such that a gap **198** is maintained between head tube **28** and upper surface **104** of fork crown **32**. Such a construction ensures that steerer assembly **16** can rotate smoothly relative to fork crown **32**. As shown in FIGS. **5**, a lowermost asymmetric cross section **200** of steerer tube **30** is shown as a line and is positioned beyond the interface between steerer tube **30** and lower bearing **180**. Such an orientation provides a preferred radial support of the steerer tube **30** at lower bearing **180**. As shown in FIG. **6**, with respect to lateral direction **128**, steerer tube **30** fully engages inner member **186** of lower bearing **180**. Such a configuration ensures that the lower end steerer tube **30** is fully supported by bearing **180** and provides close proximity of the deflectable portion of the steerer tube **30** proximate the respective lower support.

[0044] The inner and outer members **186**, **188** of upper bearing **182** cooperate with the upper radial portion **110** of steerer tube **30** and inner surface **196** of head tube **28**, respectively. Upper radial portion **110** of steerer tube **30** extends a greater length of steerer tube **30** than lower radial portion **106** so that fork assembly **14** can be used with a variety of bicycle constructions having a variety of lengths of head tube **28**. Regardless of the length of head tube **28**, asymmetric portion **108** of steerer tube **30** is preferably positioned between the generally opposite ends of head tube **28**.

[0045] Steerer tube **30** includes an optional cavity **206** formed in body **100**. Optional cavity **206** can extend a majority of the length of steerer tube **30** and provides a lighter steerer assembly **16**. Such a construction forms a steerer tube wall **208** that has a thickness that is selected to withstand to withstand the loaded interaction between steerer tube **30** and head tube **28**. Furthermore, optional cavity **206** is preferably configured to cooperate with expandable structures commonly associated with securing handlebar **18** to steerer tube **30**. Alternatively, it is envisioned that steerer tube **30** could be provided as a substantially solid body and handlebar **18** provided with an offset or stem configured to be clamped to an exterior surface of handlebar **18**. Minimally, steerer tube **30** is provided an asymmetric cross section that is disposed between handlebar **18** and fork crown **32**.

[0046] Testing has confirmed that asymmetric cross section **141** contributes to the lateral and longitudinal stiffness performance of the bicycle equipped with a steerer assembly **16** according to the present invention. With respect to bicycle operation, the forces subjected to front wheel assembly **36** that are generally aligned with the plane of rotation of the front wheel are commonly referred to as impact forces. Such longitudinal forces are further classified as braking forces, or forces that tend to deflect the forks rearward toward the rider, and comfort forces, or forces that tend to deflect the forks in a forward direction generally away from the rider. Portions of the braking and comfort forces are communicated to the rider through the rider's interaction with the handlebars.

[0047] During testing, steerer assembly **16** has been shown to provide more desirable lateral and longitudinal stiffness performance. The test values were attained during testing during which the fork assembly was maintained in a generally horizontal position and the dropouts were subjected to a load in a cantilevered fashion so as displace the dropouts relative to an upper end of the steerer assembly **16**. Such testing yielded results associated with the load, in units Newton or pound force, and a given displacement distances, in units millimeter or inch. The English and metric units are associated by the equation N/mm×5.706=lbf/in.

[0048] Steerer assembly **16** has been shown to provide a braking and comfort force values of approximately 496.422 lbf/in (about 87 N/mm) and about 499.275 lbf/in (about 87.5 N/mm) whereas a comparable assembly having a steerer assembly with a generally concentric steerer tube has been shown to provide a braking force value of approximately 516.393 lbf/in (about 90.5 N/mm) and a comfort force value of approximately 511.828 lbf/in (about 89.7 N/mm). Said in another way, steerer tube **30** reduces the transmission of the forces oriented in longitudinal direction **91** to the rider of bicycle **10**. Still in other testing, longitudinal stiffness performance was measured to decrease by approximately 85.59 lbf/in (about 15 N/mm) or about a 9% decrease in fore and aft rigidity or stiffness of the steerer assembly. Accordingly, steerer assembly **16** provides more desirable braking and comfort performance.

[0049] Decreasing the fore-aft stiffness of the steerer assembly **16** provides two distinct advantages as compared to prior art steerer tube assemblies. A first advantage is a decrease in the amount of force that is transmitted to the rider therein increasing the comfort level associated with the use of bicycle **10**. A second advantage is the distribution of the load associated with testing and/or frontal impacts over a greater

duration of an impact or deflection event. The increased compliance of steerer assembly **16** to fore and aft loading reduces the peak load that must be accommodated by steerer assembly **16** and the other structural members of the fork and bicycle assembly. Accordingly, steerer assembly **16** can be constructed in a lightweight manner capable of withstanding the fore and aft impact loading as compared to heavier steerer assemblies or constructed to provide greater fore and aft impact performance as compared to steerer assemblies of comparable weight.

[0050] With respect to lateral stiffness performance, the lateral stiffness performance of a bicycle steerer assembly can be correlated to the steering responsiveness. That is, rather than deflecting or rotating when subjected to a steering instruction input, most riders prefer a more rigid lateral interaction with the steerer assembly. When compared to other prior steerer assemblies that provide a lateral stiffness measure of about 224.256 lbf/in (about 39.3 N/mm), steerer assembly **16** provides lateral stiffness of about 282.447 lbf/in (about 49.5 N/mm). Said in another way, steerer tube **30** provides more rigid lateral support of steerer tube **30** so as to provide efficient communication of the steering inputs and lateral handling characteristics of bicycle **10**. Still in other testing, lateral stiffness performance was measured at an increase of about 85.59 lbf/in (about 15 N/mm) or approximately a 42% increase in lateral stiffness performance. Accordingly, steerer assembly provides more desirable lateral performance comfort. The asymmetric nature of steerer tube **30** allows for improvements in both the forward and rearward directed impact braking and comfort performance and the lateral handling and comfort performance of bicycle **10**.

[0051] Therefore, one embodiment of the invention includes bicycle steerer tube having a body with a first end that extends from a fork crown and a second end that extends toward a handlebar of a bicycle. An asymmetric cross section that is configured to be received in a head tube of the bicycle is formed between the first end and the second end of the body. The asymmetric cross section includes a first diameter and a second diameter that is generally transverse to the first diameter. The first diameter is greater than a second diameter and is oriented to be aligned with a pair of fork arms that are positioned on generally opposite ends of the fork crown.

[0052] Another embodiment of the invention combinable with one or more features of the embodiment above includes a bicycle assembly having a frame assembly that includes a seat tube and a head tube that are separated along a longitudinal axis of the frame assembly. A fork crown is positioned generally beneath the head tube and each of a pair of forks extends in a generally downward direction from generally opposite lateral sides of the fork crown. The bicycle assembly includes a steerer tube that extends upward from the fork crown and into the head tube. A portion of the steerer tube has an oblong cross section that has a long axis that is oriented in a direction that is generally transverse to the longitudinal axis of the bicycle when the pair of forks are symmetrically positioned relative to the longitudinal axis of the bicycle.

[0053] Another embodiment of the invention combinable with one or more of the features of the above embodiments includes a method of supporting a bicycle steerer tube. A steerer tube body is provided that is shaped to cooperate with a head tube of a bicycle frame. A portion of the steerer tube body that is supported by the head tube is shaped to have a non-circular oblong cross section with a short axis aligned with a longitudinal axis of the bicycle frame and a long axis transverse to the short axis.

[0054] The present invention has been described in terms of the preferred embodiment, and it is recognized that equivalents, alternatives, and modifications, aside from those expressly stated, are possible and within the scope of the appending claims.

[0055] Understandably, the present invention has been described above in terms of the preferred embodiment. It is recognized that various alternatives and modifications may be made to these embodiments which are within the scope of the appending claims.

What is claimed is:

1. A bicycle steerer tube comprising:

a body having a first end that extends from a fork crown and a second end that extends toward a handlebar of a bicycle;

an asymmetric cross section formed between the first end and the second end and configured to be received in a head tube of the bicycle; and

the asymmetric cross section having a first diameter that is oriented to be aligned with a pair of fork arms positioned on generally opposite ends of the fork crown and a second diameter that is generally transverse to the first diameter, the first diameter being greater than the second diameter.

2. The bicycle steerer tube of claim **1** wherein the first diameter and the second diameter each gradually reduce as the asymmetric cross section is taken at locations along a length of the body in a direction away from the fork crown.

3. The bicycle steerer tube of claim **2** wherein a rate of change of the first diameter is different than a rate of change of the second diameter along the length of the body.

4. The bicycle steerer tube of claim **3** wherein the first diameter is always greater than the second diameter.

5. The bicycle steerer tube of claim **1** wherein the body has a radially symmetric cross section outboard of the asymmetric cross section at each of the first end and the second end of the body.

6. The bicycle steerer tube of claim **5** wherein the radially symmetric cross section proximate the second end extends a greater a length of the body than the radially symmetric cross section proximate the first end.

7. The bicycle steerer tube of claim **1** wherein the body is formed integrally with the fork crown from a carbon fiber material.

8. A bicycle assembly comprising:

a frame assembly having a seat tube and a head tube that are separated along a longitudinal axis of the frame assembly;

a fork crown positioned generally beneath the head tube;

a pair of forks that extend in a downward direction from generally opposite lateral sides of the fork crown; and

a steerer tube that extends upward from the fork crown and into the head tube, the steerer tube having a portion with an oblong cross section, the oblong cross section having a long axis oriented in a direction that is generally transverse to the longitudinal axis when the pair of forks are symmetrically positioned relative to the longitudinal axis.

9. The bicycle assembly of claim **8** further comprising at least one bearing disposed between the head tube and the

steerer tube and configured to cooperate with the oblong cross section such that the oblong cross section begins proximate the at least one bearing.

10. The bicycle assembly of claim **8** wherein the fork crown and the head tube are inseparable and formed from a carbon fiber material.

11. The bicycle assembly of claim **8** further comprising a radially symmetric chamfer that extends about the steerer tube proximate a top surface of the fork crown.

12. The bicycle assembly of claim **11** wherein the steerer tube includes a radially symmetric portion at an end of the steerer tube opposite the fork crown.

13. The bicycle assembly of claim **12** further comprising a bearing configured to be disposed between the radially symmetric portion of the steerer tube and an upper end of the head tube.

14. The bicycle assembly of claim **12** wherein the radially symmetric portion of the steerer tube extends a length of the steerer tube to allow cooperation of the steerer tube with head tubes of different lengths.

15. A method of supporting a bicycle steerer tube comprising:

providing a steerer tube body that is shaped to cooperate with a head tube of a bicycle frame;

shaping a portion of the steerer tube body that is supported by the head tube to have a non-circular oblong cross section with a short axis aligned with a longitudinal axis of the bicycle frame and a long axis transverse to the short axis.

16. The method of claim **15** further comprising providing a bearing between the portion of the steerer tube body and the head tube, the bearing having an internal diameter that generally corresponds to the long axis of the non-circular oblong cross section at a location proximate the bearing.

17. The method of claim **15** further comprising tapering the steerer tube body from a first radially symmetric cross section to a second radially symmetric cross section with the non-circular oblong cross section positioned between the first and second radially symmetric cross sections.

18. The method of claim **17** further comprising providing a fork crown proximate the first radially symmetric cross section.

19. The method of claim **17** wherein the second radially symmetric cross section extends a greater length of the steerer tube body than the first radially symmetric cross section.

20. The method of claim **17** wherein the non-circular oblong portion of the steerer tube body extends a greater length of the steerer tube body than either of the first or second radially symmetric cross sections.

21. The method of claim **15** further comprising altering an eccentricity of the non-circular oblong cross section along a length of the steerer tube body.

* * * * *