US 20070257466A1

(19) United States

(12) Patent Application Publication

(10) Pub. No.: US 2007/0257466 A1

(43) Pub. Date: Nov. 8, 2007

Murphy et al.

(54) **BICYCLE FORK WITH IMPROVED STEER TUBE AND CROWN**

(75) Inventors: **Roger Paul Murphy**, Waterloo, WI (US); **Chad Manuell**, Waterloo, WI (US)

Correspondence Address:
**BARNES & THORNBURG LLP**
**P.O. BOX 2786**
**CHICAGO, IL 60690-2786**

(73) Assignee: **TREK BUCYCLE CORPORATION**, Waterloo, WI (US)

(21) Appl. No.: **11/744,110**

(22) Filed: **May 3, 2007**

**Related U.S. Application Data**

(60) Provisional application No. 60/746,289, filed on May 3, 2006.

**Publication Classification**

(51) **Int. Cl.**
*B62K 17/00* (2006.01)

(52) **U.S. Cl.** ..... **280/276**

(57) **ABSTRACT**

A fiber reinforced plastic bicycle fork uses a reinforced crown steer tube junction extending the steer tube through a tapered socket to the brake bolt such that the metal steer tube coacts with the fiber reinforced plastic fork to preserve structural integrity in the event of application of high stress to the fork.

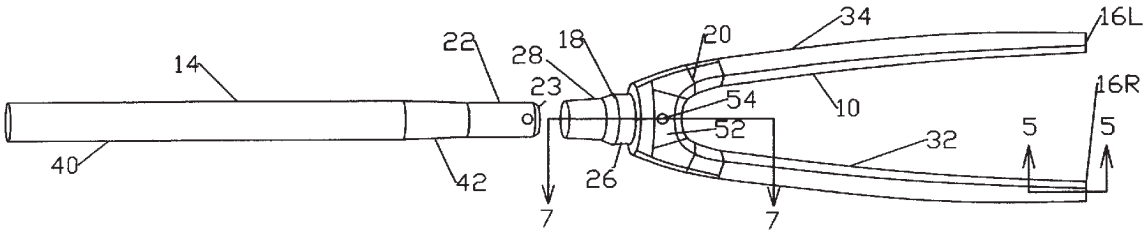

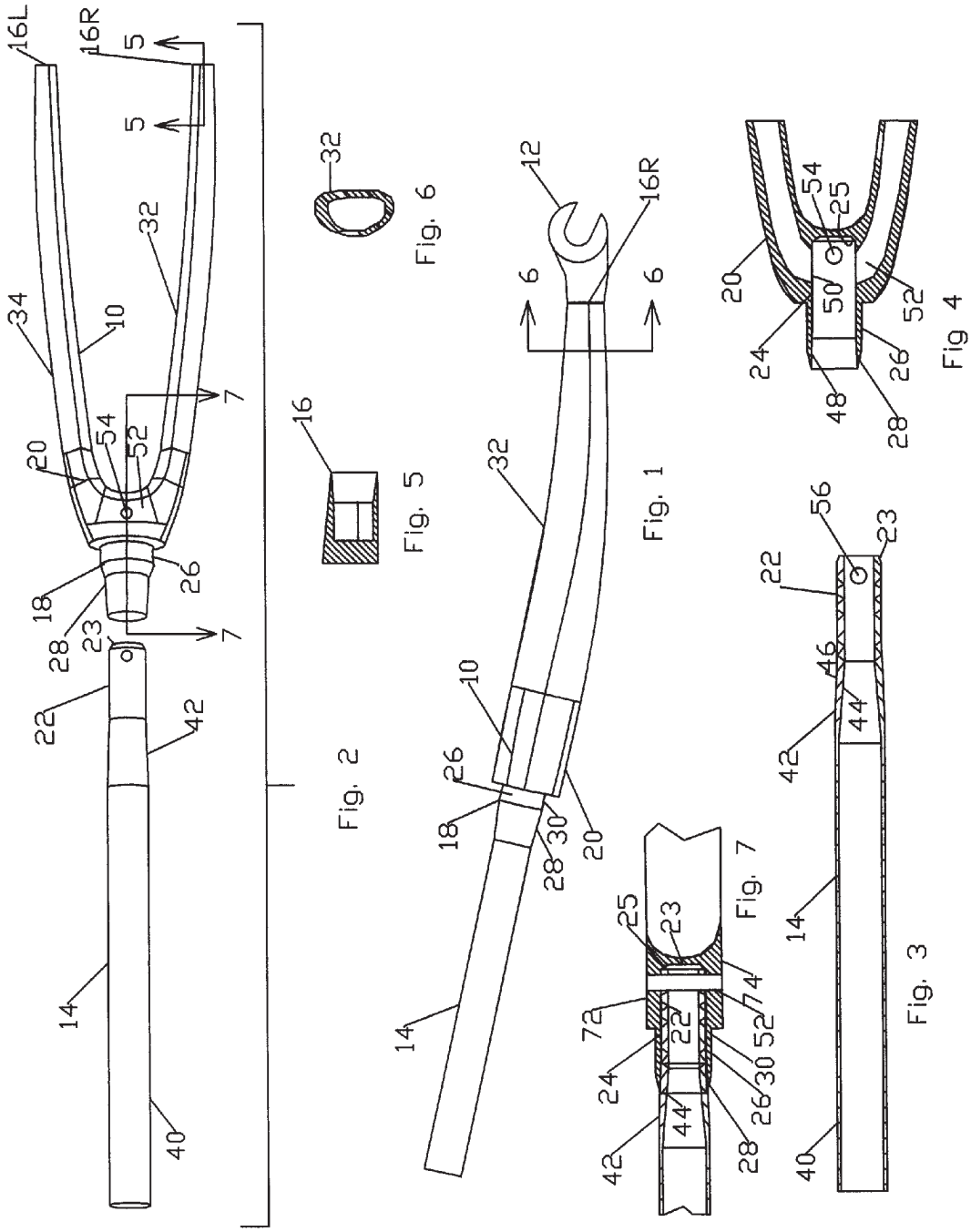


Fig. 2

Fig. 5

Fig. 6

Fig. 1

Fig. 7

Fig 4

Fig. 3

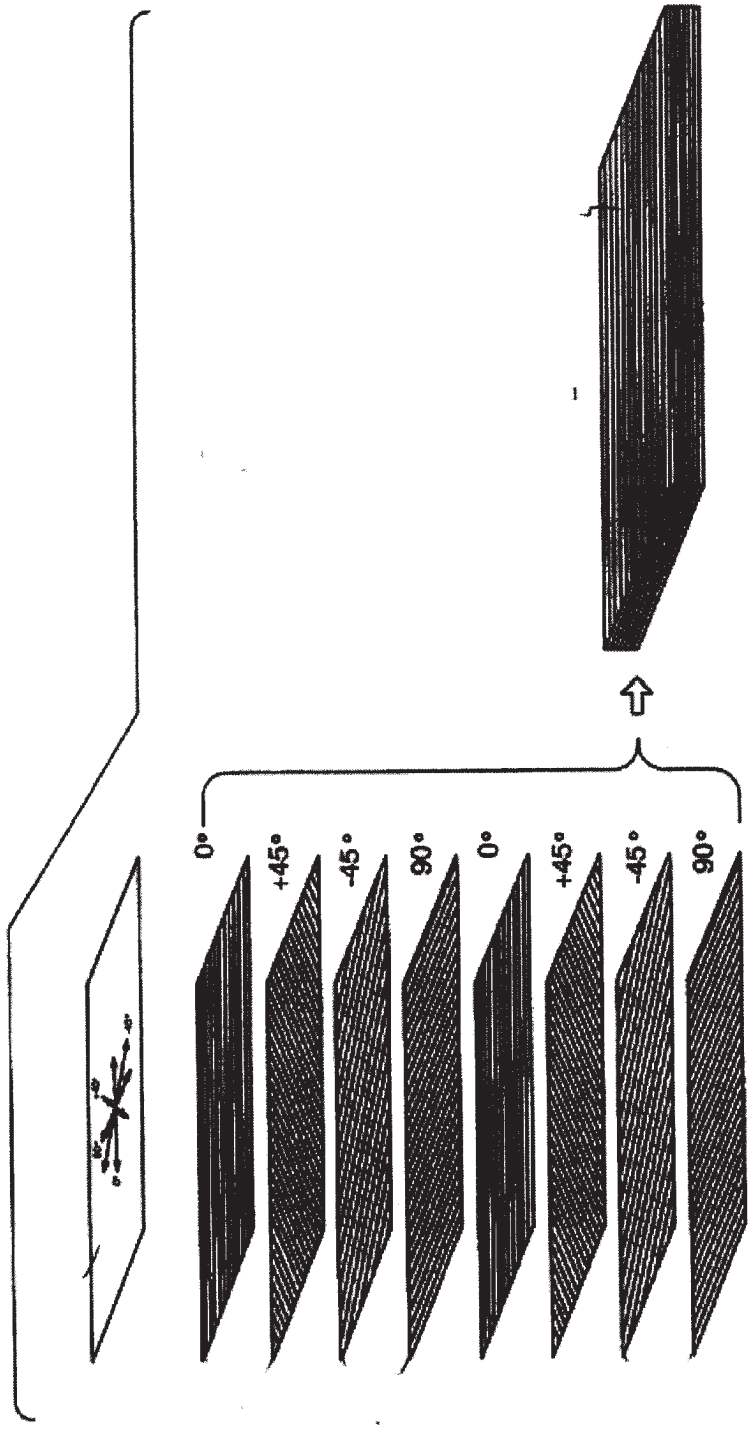


Fig. 8

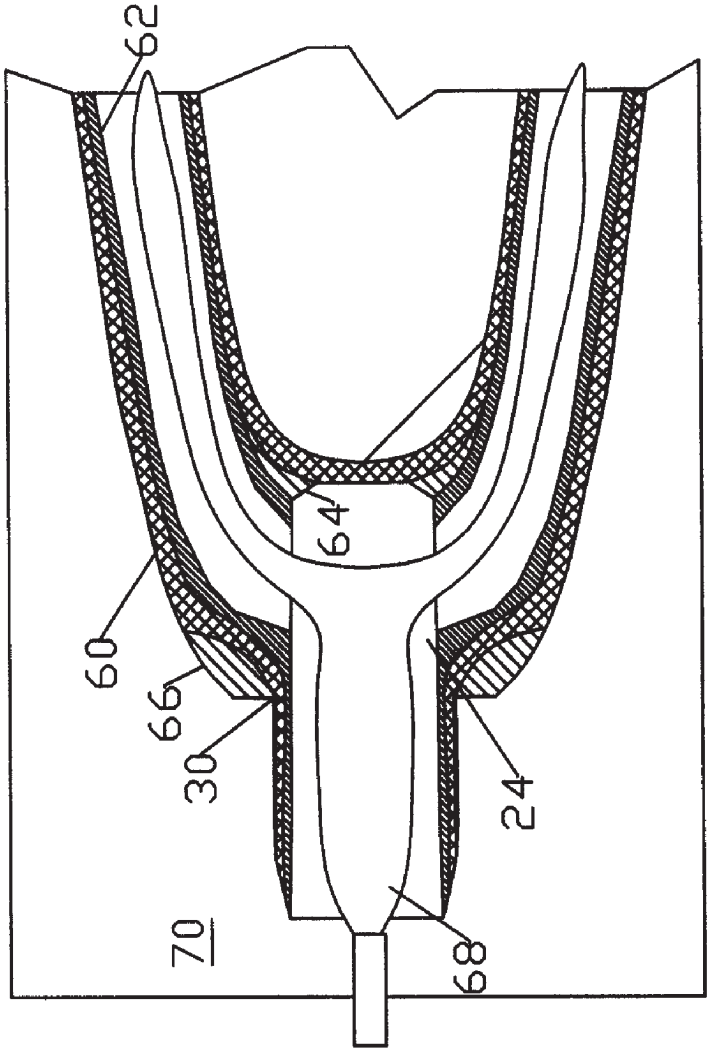


Fig. 9

# BICYCLE FORK WITH IMPROVED STEER TUBE AND CROWN

## BACKGROUND OF THE INVENTION

**[0001]** 1. Field of the Invention

**[0002]** The invention is a bicycle fork with improved steer tube and crown for a bicycle with improved steer tube and crown strength and durability.

**[0003]** 2. Description of Related Art

**[0004]** Generally, prior art bicycle fork solutions have included the metal fork with a strong-crown, and a steer tube on the top, with tubular fork blades ending in dropouts. Fiber reinforced plastic composite forks have generally used the strong-crown and blade model, or have molded two halves, with the blades extending into the steer tube area, but being subdivided in halves, that were bonded together.

**[0005]** Foret U.S. Pat. No. 4,828,285, Hollingsworth U.S. Pat. No. 5,016,895 and Buckmiller U.S. Pat. No. 5,609,349 are representative of the high-strength crown approach, although Foret shows the blade halves as an alternative embodiment.

**[0006]** Klein U.S. Pat. Nos. 5,944,932 and 5,692,764 and Bezin U.S. Pat. Nos. 5,039,470 and 5,181,732 are representative of the two blade halves approach. In each approach to a composite fork, separate metal dropouts are used for wheel attachment, primarily because of wear considerations.

**[0007]** An example of a threadless fork and handlebar stem combination is shown in Edwards, U.S. Pat. No. 5,865,069.

**[0008]** Application Publication No. US-2005-0012299-A1, sharing a common assignee herewith, teaches a solution to strengthening the steer tube crown intersection using continuous carbon reinforcing fibers extending from the fork blades, through the crown and into the steer tube. In the fork in this published application, the aluminum steer tube slips over the carbon steer tube and stops short of the crown. The choice of aluminum provides advantages over a fork made entirely of fiber reinforced plastic in that the handlebar stem can be more readily fastened to the steer tube which can be particularly advantageous in situation such as a workshop by a mechanic unskilled in fastening techniques for more exotic materials. The material properties of a metal or other ductile material in the steer tube, in combination with high modulus fiber reinforcement in the fork body yield improvements under certain conditions.

**[0009]** Colegrove, et al, U.S. Pat. No. 6,924,021 describes a complex-shaped carbon fiber structural member and its method of manufacture, using a combination of prepreg sheets, laminations, unidirectional fiber ropes and fiber bundles, which methods can be used in forming the fork of the present invention.

**[0010]** Notable in composite bicycle frame patents is the fact that the disclosures in the leading patents focus on the frame itself, to the exclusion of the fork. Thus, Nelson U.S. Pat. No. 6,270,104 B1, Duplessis U.S. Pat. No. 5,076,601, Trimble U.S. Pat. No. 5,158,733, Brezina U.S. Pat. No. 4,493,749 and Derujinsky U.S. Pat. No. 4,900,048 do not show forks, while Trimble U.S. Pat. Nos. 4,923,203 and 4,982,975 show forks, but only as part of the environment.

**[0011]** The aforementioned patents and application are incorporated by reference as if fully set forth herein.

## SUMMARY OF INVENTION

**[0012]** The invention teaches the use of a steer tube that is preferably metallic and is preferably tapered and mates with and is bonded to a carbon reinforced plastic portion comprising a steer tube stub and fork crown. Preferably the brake bolt passes through the fork body and the aluminum steer tube. Other configurations which place a ductile material in areas of potentially high load, such as with a first portion of a steer tube being of ductile material and a second portion being of carbon fiber reinforced plastic, may be adaptable consistent with the teachings herein.

**[0013]** This fork provides improvement in strength and toughness by providing a tougher crown, crown race seat and bearing receivable portion in the lower portion of the steer tube, near the intersection of steer tube and crown. In this invention, even in a significant impact, the ductile material of the steer tube deforms but holds the fork together. The brake bolt also acts as redundant reinforcement.

**[0014]** The fiber reinforced plastic portion of the fork can utilize optimum compaction, low void molding of a bicycle fork. A lay-up schedule for the laminations in combination with specific structural shapes enables a strong, light fork while utilizing the advantages of different material properties of the pieces for reinforcement, particularly at the fork crown. The fork crown portion is formed by bladder molding using a layup to provide walls that are sufficiently thick as to make this portion substantially solid. Other reinforcing arrangements such as internal walls can also be utilized as alternatives.

**[0015]** A bonded steer tube enables the use of a multiplicity of materials such as the aluminum. Beveling or tapering the steer tube receiving portion of the fiber reinforced plastic crown and also beveling or tapering the steer tube enables a gradual transition zone with wall thickness at the top of carbon crown proximate the bearing race, such that impact damage can be absorbed with the fork bending, but not breaking.

**[0016]** The steer tube of the invention is particularly advantageously adapted to use threadless fork arrangements in which the handlebar stem clamps to the exterior of the steer tube under preload from an adjusting cap, thereby locking a top bearing race in place.

**[0017]** The invention here uses a method which forms a bicycle fork having a complete shell using main laminations which contain continuous fibers extending from the tip to the steer tube. The entire carbon portion is bladder molded and is hollow. The walls that support the steer tube are molded thick enough so that when machined to receive the steer tube, there is enough material left to support the steer tube entirely front to back. There is a thin portion on the sides of the steer tube that are left unsupported inside the crown since the entire carbon structure is molded hollow. A preferably aluminum steer tube extension is bonded to a steer tube portion of the shell, although other metals or ductile materials could be used. The crown bearing race is a part of the one-piece lower of the fork and is machined to the desired diameter.

**[0018]** The dropouts are preferably secondarily bonded and have a male plug on the dropout that plugs into the

female socket on the fork blade. The dropouts may be co-molded, may have sockets, or both.

**[0019]** The aluminum steer tube extension receives a star-fangled nut of a typical threadless headset. The use of aluminum, other metal, or other material which can suffer limited wall deformation of that portion of the steer tube which is captured within a bicycle handlebar stem, spacers or frame head tube, is advantageous in a threadless stem configuration because it suffers less from strength reduction as a result of the embedding of the star-fangled nut teeth in the interior wall, when compared to a fiber reinforced plastic composite material. The use of high modulus composite material extending continuously up onto or around the steer tube adds to overall fork strength

## BRIEF DESCRIPTION OF DRAWINGS

**[0020]** FIG. **1** is a side elevational view of the bicycle fork.

**[0021]** FIG. **2** is a top plan view of the fiber reinforced plastic portion and steer tube of the bicycle fork.

**[0022]** FIG. **3** is a sectional view of the steer tube of the bicycle fork.

**[0023]** FIG. **4** is a sectional view of the crown portion of the bicycle fork.

**[0024]** FIG. **5** is a sectional view of the bicycle fork dropout receiving tip of the bicycle fork taken at line **5-5** of FIG. **2**.

**[0025]** FIG. **6** is a sectional view of the bicycle fork blade of the bicycle fork taken at line **6-6** of FIG. **1**.

**[0026]** FIG. **7** is a sectional view of the bicycle fork crown and steer tube taken at line **7-7** of FIG. **2**.

**[0027]** FIG. **8** is a schematic showing a lamination layup.

**[0028]** FIG. **9** is a sectional view showing the layup of a portion of the fork in a portion of a mold.

## DESCRIPTION OF EMBODIMENTS

**[0029]** A bicycle fork **10** is formed of fiber reinforced plastic having bonded dropouts **12** and a steer tube **14**. The fiber reinforced plastic portion of the fork extends from the tips **16**L and **16**R to steer tube base **18** and includes crown portion **20**. Tube **14** is formed with a narrowed, but thickened interior wall portion **22** which mates with a correspondingly beveled socket **24** of crown portion **20**. Beveled edges **23**, **25** provide a gradual transition zone for the fiber reinforced plastic to metal joint thereby providing superior durability and predictability in strength properties at the crown race and bearing seat.

**[0030]** While aluminum has advantages for tube **14**, other materials could be used such as steel or titanium. Other hybrid metal/composite structures could be used. Indeed, tube **14** could be formed so as to limit the ductile material, such as aluminum, to the area proximate the crown, and be formed in a composite manner with fiber reinforced plastic extending upward from the ductile portion to the location at which the handlebar would be attached. The form and arrangement of the exterior surface of wall portion **22** and interior surface of socket **24** are consistent with the principles of lug-and-tube construction described in the Nelson U.S. Pat. No. 6,270,104 B1, and Colegrove, et al, U.S. Pat. No. 6,924,021 patents referenced above.

**[0031]** Base **18** is also beveled, providing a thicker wall proximate crown race **26** and a tapered transitional end **28** to better distribute loads from the bicycle headset to the fork crown **20**. Crown **20** is formed by precision molding or machining to have a bearing seat **30** located so as to surround the region defined by crown race wall **26** and portion **22**, so that there is a double thickness of different materials at this high load location. Some machining of crown race wall **26** and bearing seat **30** is permitted by the strength of the fiber reinforced plastic crown **20**. Precision molding may obviate the need for machining.

**[0032]** Depending from crown **20** are fork blades **32**, **34**. Blades **32**, **34** end in tips **16**L and **16**R to which dropout **12** and its corresponding opposing dropout are attached.

**[0033]** Steer tube **14** is formed with varying wall thickness and wall diameter progressively from handlebar stem receiving portion **40**, having a fairly large diameter and fairly thin wall, through transition zone **42** at which an internal taper **44** thickens the wall, while the external taper **46** reduces the diameter, terminating in end **22**.

**[0034]** Mating surfaces in socket **24** of base **18** are formed with a conical transition **48** generally inside end **28** that leads to a cylindrical wall **50** that passes through crown race wall **26** and extends into the body of crown **20**.

**[0035]** Additionally, crown **20** has a brake bolt portion **52** having an aperture **54** for receiving a bicycle brake bolt. Aperture **54** aligns with a corresponding aperture **56** in steer tube end **22**.

**[0036]** Tube **14** is bonded in socket **24** with the various surfaces described above being adhesively connected. This could be through a co-molding process or could be a post-molding secondary bond. This configuration coacts with base **18** so that crown race wall **26** is of a dimension standard in bicycle frames, enabling a new fork in accordance to the invention to be adapted to easily replace existing forks. Thus, thickened end **22** and crown race wall **26** provide a very strong, impact resistant structure at the location where high loads are concentrated in the case of a collision between a bicycle wheel and an obstruction. Additionally, a mechanical connection is provided by the brake bolt penetrating coaxial apertures **54**, **56**.

**[0037]** In order to best take advantages of the material properties within the structures of a fork retrofittable to standard bicycles and fitting standard wheels and brakes, a combination of the methods of Nelson U.S. Pat. No. 6,270,104 B1, and Colegrove, et al, U.S. Pat. No. 6,924,021 can be adapted. FIG. **8** shows schematically the orientation of different unidirectional prepreg carbon-epoxy layers into a quasi-isotropic lamination. A plurality of these laminations, **60**, **62** can be used as shown in FIG. **9**, in combination with a fiber bundle concentration region **64**, **66** and this uncured wrapped around an inflatable bladder, **68** fitted in a female mold **70**. Regions **64**, **66** can be advantageously located to better orient laminations **60**, **62**, or to provide material to precisely form bearing seat **30**.

**[0038]** A comparison of the section of FIG. **4**, taken on a transverse line, looking in a longitudinal direction, and FIG. **7** taken on a longitudinal line, looking in a transverse direction, relative to the direction of travel of a bicycle illustrate the structure of socket **24**. Socket **24** is formed so that front and rear walls **72**, **74** contact, and are bonded to, portion **22** of steer tube **14**. End **23** fits in and is bonded to socket end **25**. This provides high strength resisting longitudinal loading. FIG. **4** shows the advantages of the hollow formation of crown **20**. Lateral loads affect forks with attached wheels much differently than frontal loads. In FIG. **4**, the side extending portions of crown **20**, which merge into blades **32**, **34** are not required to contact portion **22**. The

contact and bonding of different materials and the shape of socket **24** with thickened fork walls provide a high strength, lightweight and tough fork having both high modulus and ductility proximate the crown.

In accordance with our invention, we claim:

**1**. A bicycle fork formed of fiber reinforced plastic and having dropouts at a fork tip and a steer tube comprising:

a fiber reinforced plastic portion of the fork extending from said tip to a steer tube base;

said fiber reinforced plastic portion including a crown portion;

said steer tube is formed with a narrowed, but thickened interior wall portion ending in a first beveled edge;

a socket being formed in said crown portion, said socket terminating in a second beveled edge;

said wall portion and first beveled edge mate with said socket and said second beveled edge;

said interior wall portion being bonded to a front wall and rear wall of said crown portion;

a crown race and bearing seat being located in the region of the steer tube wall portion and crown front and rear wall bonding proximate said crown race and a tapered transitional end tapers to a handlebar stem receiving portion of said steer tube;

said fiber reinforced plastic being formed with high modulus fibers and said steer tube being formed of a material having ductility higher than said fibers.

**2**. The fork of claim **1**,

said steer tube being formed of one of aluminum, steel or titanium.

**3**. The fork of claim **2**,

said fiber reinforcement being formed substantially of carbon.

**4**. The fork of claim **3**,

said steer tube is formed with varying wall thickness and wall diameter, said thickness increasing and wall diameter decreasing progressively from said handlebar stem receiving portion to said first beveled end, having a fairly large diameter and fairly thin wall, through a transition zone at which an internal taper thickens the wall, while the external taper reduces the diameter, through an end portion, terminating in said first beveled end.

**5**. The fork of claim **4**,

mating surfaces being formed in said socket with a conical transition generally inside said steer tube end portion that leads to a cylindrical wall that penetrates crown race wall and extends into the body of said crown.

**6**. The fork of claim **5**,

said crown has a brake bolt portion having a first aperture for receiving a bicycle brake bolt, said first aperture aligning with a second aperture in said steer tube end portion.

**7**. The fork of claim **6**,

said steer tube is bonded in said socket adhesively by one of a co-molding process or a post-molding secondary bond.

**8**. The fork of claim **7**,

said fiber reinforced plastic portion being formed of differentially orientated unidirectional prepreg carbon-epoxy layers into a quasi-isotropic lamination;

said lamination combined with a fiber bundle concentration region and placed uncured and wrapped around an inflatable bladder, in a female mold;

said bladder is inflated and said prepreg laminations cured;

said mold is opened after said fork is fully formed and cured and said fork is removed.

**9**. A bicycle fork crown formed of fiber reinforced plastic, said crown having a top wall, bottom wall, front wall, and back wall comprising:

a projecting socket wall extending upward from the top wall of said crown and sized to receive a reinforcing tube formed with a tube wall portion ending in a first edge and extending through said socket to a second edge formed in an upper portion of said socket wall so that said first edge mates with said second edge;

said tube wall portion being attached to said socket wall by one of bonding or comolding;

a crown race and bearing seat being located in the region of the tube wall portion and crown front and rear wall bonding;

said fiber reinforced plastic being formed with high modulus fibers and said tube being formed of a material having ductility higher than said fibers.

**10**. The fork crown of claim **9**,

said tube being formed of one of aluminum, steel, titanium or high ductility composite.

**11**. The fork crown of claim **9**,

said tube is a steer tube formed with varying wall thickness and wall diameter, said thickness increasing and wall diameter decreasing progressively from a handlebar stem receiving portion to said first beveled end through a transition zone at which an internal taper thickens the wall, while the external taper reduces the diameter, through an end portion, terminating in said first beveled end.

**12**. The fork crown of claim **9**, further comprising a brake bolt portion having a first aperture for receiving a bicycle brake bolt, said first aperture aligning with a second aperture in said tube end portion.

**13**. The fork crown of claim **9**,

said tube is bonded in said socket adhesively by one of a co-molding process or a post-molding secondary bond.

**14**. The fork crown of claim **9**,

said fiber reinforced plastic portion being formed of differentially orientated unidirectional prepreg carbon-epoxy layers into a quasi-isotropic lamination;

said lamination combined with a fiber bundle concentration region and placed uncured and wrapped around an inflatable bladder, in a female mold;

said bladder is inflated and said prepreg laminations cured;

said mold is opened after said fork is fully formed and cured and said fork is removed.

**15**. A bicycle fork formed of a plastic matrix reinforced by high modulus, unidirectional fibers with a steer tube, crown, blades and dropouts for attaching a wheel to a bicycle frame comprising:

said crown is formed of walls defining a hollow body;

said hollow body formed to provide a steer tube receivable socket;

said socket is formed so that front and rear walls contact and are bonded to a portion of the steer tube at a bond;

said fibers, walls and bond providing high strength resisting longitudinal loading;

said steer tube being formed of a material having a ductility higher than said matrix;

said steer tube maintaining interconnection between said wheel and said bicycle frame in the event of substantial failure of said fibers.

**16**. The fork of claim **15**, further comprising:

a fiber reinforced plastic portion of the fork extending from said dropouts to a steer tube base;

said fiber reinforced plastic portion including said crown;

said steer tube is formed with a narrowed, but thickened interior wall portion ending in a first beveled edge;

said socket terminating in a second beveled edge;

said thickened interior wall portion mates and first beveled edge mate with said socket and said second beveled edge;

said interior wall portion being bonded to a front wall and rear wall of said crown;

a crown race and bearing seat being located in the region of the steer tube wall portion and crown front and rear wall bonding proximate said crown race and a tapered transitional end tapers to a handlebar stem receiving portion of said steer tube.

**16**. The fork of claim **15**,

said steer tube being formed of one of aluminum, steel, titanium or high ductility composite.

**17**. The fork of claim **15**,

said fiber being formed substantially of carbon.

**19**. The fork of claim **15**,

said steer tube is formed with varying wall thickness and wall diameter, said thickness increasing and wall diameter decreasing progressively from said handlebar stem receiving portion to said first beveled end, having a fairly large diameter and fairly thin wall, through a transition zone at which an internal taper thickens the wall, while the external taper reduces the diameter, through an end portion, terminating in said first beveled end.

**20**. The fork of claim **19**,

mating surfaces being formed in said socket with a conical transition generally inside said steer tube end portion that leads to a cylindrical wall that penetrates crown race wall and extends into the body of said crown.

* * * * *