Trials@uspto.gov
571-272-7822

Paper 33
Date: August 4, 2025

UNITED STATES PATENT AND TRADEMARK OFFICE

BEFORE THE PATENT TRIAL AND APPEAL BOARD

FOX FACTORY, INC.,
Petitioner,

v.

SRAM, LLC,
Patent Owner.

IPR2024-00491
Patent 10,328,993 B2

Before MEREDITH C. PETRAVICK, HYUN J. JUNG, and KEVIN W. CHERRY, *Administrative Patent Judges.*

JUNG, *Administrative Patent Judge*.

JUDGMENT
Final Written Decision
Determining All Challenged Claims Unpatentable
35 U.S.C. § 318(a)

I. INTRODUCTION

We have jurisdiction under 35 U.S.C. § 6. This Final Written Decision is issued pursuant to 35 U.S.C. § 318(a) (2024) and 37 C.F.R. § 42.73 (2023). For the reasons that follow, we determine that FOX Factory, Inc. ("Petitioner") has shown by a preponderance of the evidence that claims 1–4, 6, 8, 10, 12, 14–18, 20, 22, 24, 26–29, 31, 33–38, 40, 42, 44, 46–49, 51, 53, and 56–64 of U.S. Patent No. 10,328,993 B2 (Ex. 1001, "the '993 patent") are unpatentable.

A. Background and Summary

Petitioner filed a Petition (Paper 1, "Pet.") requesting institution of an *inter partes* review of claims 1–4, 6, 8, 10, 12, 14–18, 20, 22, 24, 26–29, 31, 33–38, 40, 42, 44, 46–49, 51, 53, and 56–64 of the '993 patent. SRAM, LLC ("Patent Owner") filed a Preliminary Response. Paper 6 ("Prelim. Resp."). With our authorization, the parties also filed papers directed solely to our discretion under § 314(a). Papers 7, 9. Pursuant to 35 U.S.C. § 314, we instituted an *inter partes* review of claims 1–4, 6, 8, 10, 12, 14–18, 20, 22, 24, 26–29, 31, 33–38, 40, 42, 44, 46–49, 51, 53, and 56–64 of the '993 patent on all presented challenges. Paper 11 ("Inst. Dec."), 2, 31.

After institution, Patent Owner filed a Response (Paper 16, "PO Resp."), to which Petitioner filed a Reply (Paper 18, "Pet. Reply"), and Patent Owner thereafter filed a Sur-reply (Paper 24, "PO Sur-reply"). An oral hearing in this proceeding was held on May 15, 2025; a transcript of the hearing is included in the record. Paper 32 ("Tr.").

B. Real Parties in Interest

Petitioner identifies FOX Factory, Inc. and FOX Factory Holding Corp. as real parties in interest. Pet. 87. Patent Owner identifies itself as the real party in interest. Paper 4, 2.

C. Related Matters

The parties identify *SRAM, LLC v. FOX Factory, Inc.*, 1:23-cv-00492 (N.D. Ga.) as a related matter. Pet. 88; Paper 4, 2. Patent Owner also identifies IPR2024-00492. *Id.*

D. The '993 Patent (Ex. 1001)

The '993 patent issued on June 25, 2019 from an application filed on December 30, 2014. Ex. 1001, codes (22), (45). The '993 patent relates "particularly to bicycle steerer tubes." *Id.* at 1:6–7. Figure 1 of the '993 patent is below reproduced.

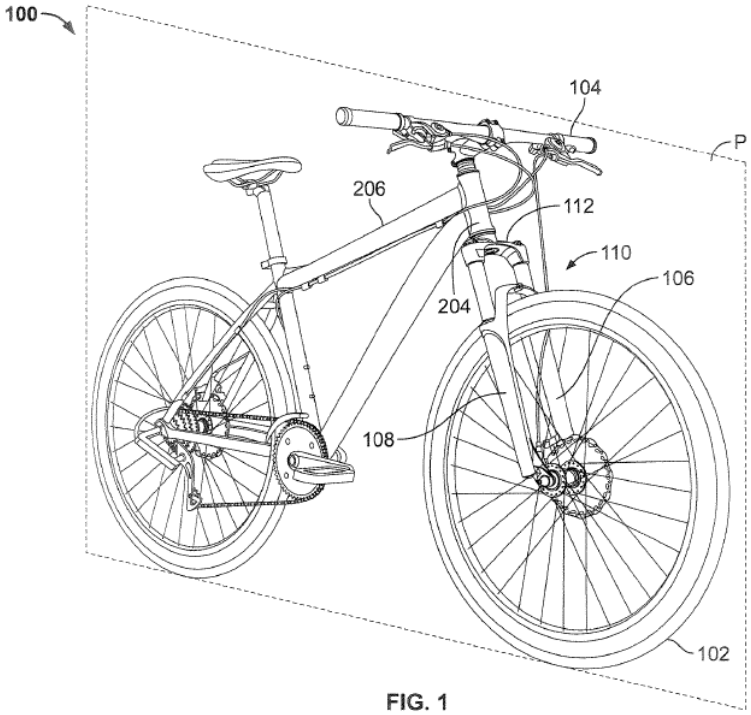

FIG. 1

Figure 1 shows "a perspective view of a representative bicycle." Ex. 1001, 2:16. Bicycle 100 includes fork 110 that links front wheel 102

and rider-operated handlebar 104. *Id.* at 1:8–12. Bicycle 100 "is steered by varying the plane of its front wheel 102 out of a plane of travel P, which is aligned with the running direction of the bicycle." *Id.* at 1:8–11. Figures 6, 9, and 10 of the '993 patent are below reproduced.

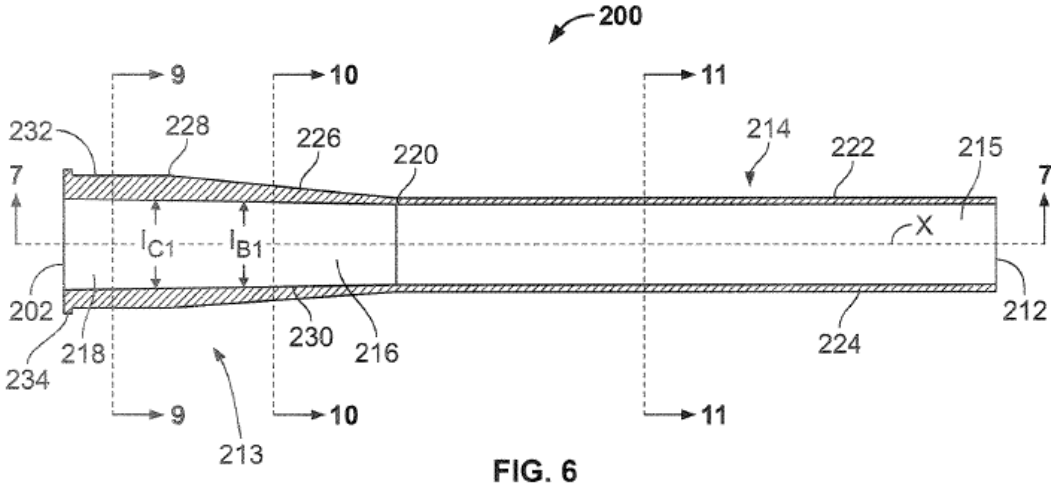

FIG. 6

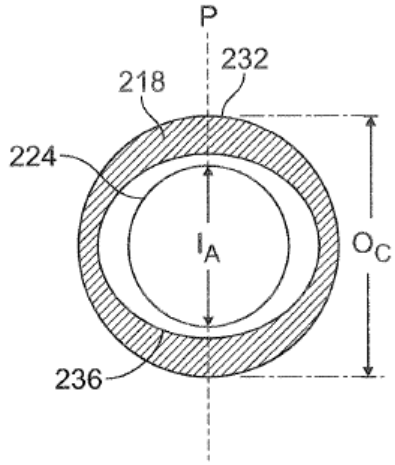

FIG. 9

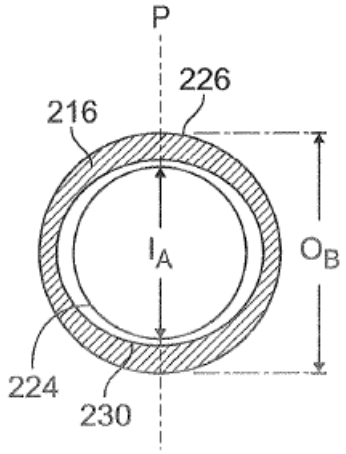

FIG. 10

Figure 6 shows an axial sectional view of a bicycle fork that includes a steerer tube. Ex. 1001, 2:17–20, 2:28–29. Figures 9 and 10 are sectional views taken at lines 9-9 and 10-10 of Figure 6. *Id.* at 2:33–36.

According to the '993 patent, "uniformly thick and stiff steerer tubes do not take into account the differences in loads on the steerer tube and stability, comfort and steering requirements." Ex. 1001, 1:39–42. "[S]teerer

tube 200 is particularly advantageous as used with a mountain bike, as the steerer tube stiffness within the plane of travel P ideally is enhanced relative to its stiffness orthogonal to plane P." *Id.* at 3:29–32.

Steerer tube 200 has lower section 213 and upper section 214. Ex. 1001, 3:33–34. Segment 215 of upper section 214 is adapted to be joined to handlebar 104. *Id.* at 3:38–39. Lower section 213 has lower portion 218 and upper portion 216. Ex. 1001, 3:34–36. Outer surface 226 of upper portion 216 is frustoconical. *Id.* at 3:55–56.

"[I]nner surface 230 of upper portion 216 has a shape which changes as a function of the distance from upper end 220." Ex. 1001, 4:5–7. "At upper end 220, the inner surface 230 is circular in cross section" and "towards upper portion lower end 228, the cross section becomes more and more elliptical." *Id.* at 4:7–10. "[L]ower portion 218 has an inner surface 236 which continues to change cross-sectional shape as one proceeds to tube end 202." *Id.* at 4:37–39.

E. Illustrative Claim

The '993 patent includes 65 claims, of which Petitioner challenges claims 1–4, 6, 8, 10, 12, 14–18, 20, 22, 24, 26–29, 31, 33–38, 40, 42, 44, 46–49, 51, 53, and 56–64. Of the challenged claims, claims 1, 61, and 64 are independent, and reproduced below is claim 1.

> 1. A steering tube for a bicycle, the steerer tube comprising:
>
> an elongate hollow body arranged around a steering axis located in a vertical plane of travel of the bicycle,
>
> the body having upper and lower sections, a segment of the upper section adapted to be joined to a bicycle handlebar, a segment of the lower section adapted to be joined to a crown of a front wheel fork of the bicycle, the lower section joined to the upper

> section, and outer surfaces of the upper and lower sections of the body being circular in cross section, and
>
> the body formed by a wall, a thickness of the wall at any point in the lower section of the body varying as a function of the cross-sectional angle of the point relative to the plane of travel, the wall thickness being at a maximum in the plane of travel of the bicycle.

Ex. 1001, 8:5–19.

F. Asserted Prior Art and Proffered Testimonial Evidence

Petitioner identifies the following references as prior art in the asserted grounds of unpatentability:

Name	Reference	Exhibit
Schroeder	US 7,503,576, issued Mar. 17, 2009	1010
Moechnig	US 2010/0259028 A1, published Oct. 14, 2010	1008
Valat	GB 287,452, issued Aug. 9, 1928	1007
Denk	DE 196 29 740 A1, published Jan. 29, 1998	1006[1]

Petitioner contends that the above references are prior art under § 102(a)(2). Pet. 1. Petitioner also provides a Declaration of Alexander Slocum, Ph.D. (Ex. 1003) and a Supplemental Declaration of Alexander Slocum, Ph.D. (Ex. 1024).

Patent Owner provides a Declaration of T. Kim Parnell (Ex. 2021). Patent Owner also provides Declarations of Michael Durbin (Exs. 2009, 2014, 2023) to support that certain exhibits are true and correct copies.

Deposition transcripts for Dr. Slocum (Ex. 2019) and for Dr. Parnell (Ex. 1026) were filed.

[1] Like Petitioner, we cite to the translation of Denk (Ex. 1006) instead of the original publication of Denk (Ex. 1005).

G. Asserted Grounds

Petitioner asserts that claims 1–4, 6, 8, 10, 12, 14–18, 20, 22, 24, 26–29, 31, 33–38, 40, 42, 44, 46–49, 51, 53, and 56–64 are unpatentable on the following grounds:

Claims Challenged	35 U.S.C. §	References/Basis
1–4, 6, 8, 10, 12, 14–18, 20, 22, 24, 26–29, 33–38, 40, 42, 44, 46–49, 53, 56–63	103	Denk, Moechnig
31, 51, 64	103	Denk, Moechnig, Schroeder
1–4, 6, 8, 10, 12, 14–18, 20, 22, 24, 26–29, 33–38, 40, 42, 44, 46–49, 53, 56–63	103	Valat, Moechnig, Denk
31, 51, 64	103	Valat, Moechnig, Denk, Schroeder

Pet. 2.

II. ANALYSIS

A. Legal Standards

"In an [*inter partes* review], the petitioner has the burden from the onset to show with particularity why the patent [claim] it challenges is unpatentable." *Harmonic Inc. v. Avid Tech., Inc.*, 815 F.3d 1356, 1363 (Fed. Cir. 2016). This burden of persuasion never shifts to Patent Owner. *Dynamic Drinkware, LLC v. Nat'l Graphics, Inc.*, 800 F.3d 1375, 1378 (Fed. Cir. 2015). To prevail in an *inter partes* review, the petitioner must support its challenges by a preponderance of the evidence. 35 U.S.C. § 316(e); 37 C.F.R. § 42.1(d).

Petitioner contends that the challenged claims of the '993 patent are unpatentable under § 103. Pet. 2. A claim is unpatentable under § 103 if the

differences between the claimed subject matter and the prior art are such that the subject matter, as a whole, would have been obvious at the time the invention was made to a person having ordinary skill in the art to which said subject matter pertains. *KSR Int'l Co. v. Teleflex Inc.*, 550 U.S. 398, 406 (2007). The question of obviousness is resolved on the basis of underlying factual determinations, including: (1) the scope and content of the prior art; (2) any differences between the claimed subject matter and the prior art; (3) the level of skill in the art; and (4) where in evidence, so-called secondary considerations. *Graham v. John Deere Co.*, 383 U.S. 1, 17–18 (1966). When evaluating a combination of teachings, we must also "determine whether there was an apparent reason to combine the known elements in the fashion claimed by the patent at issue." *KSR*, 550 U.S. at 418 (citing *In re Kahn*, 441 F.3d 977, 988 (Fed. Cir. 2006)). Whether a combination of elements produces a predictable result weighs in the ultimate determination of obviousness. *Id.* at 416–417.

B. Level of Ordinary Skill in the Art

Petitioner argues that a person of ordinary skill in the art

> would have had (1) a Bachelor's degree in Mechanical Engineering or an equivalent degree, and 1-2 years of experience in design work related to optimal mechanical and structural design (e.g., minimizing weight while maximizing strength and stiffness for a particular type of loading) such as practiced, for example, in aerospace, bicycle, or machinery (such as robotics) industries; or (2) at least a Master's degree in Mechanical Engineering or an equivalent degree with a focus on design of mechanical elements and structures, and a good understanding of mechanical and structural design principles.

Pet. 8 (citing Ex. 1003 ¶ 23). For institution, we preliminarily adopted Petitioner's proposed level of ordinary skill in the art. Inst. Dec. 14.

Patent Owner responds that a person of ordinary skill in the art would have been "more appropriately connected to, and consider[ed] the particularities of, vehicle component and like design." PO Resp. 14. Patent Owner contends that one of ordinary skill in the art would have had "a degree in Mechanical Engineering and approximately three years' experience in vehicle component design and like technology, or a Master's degree or higher in Mechanical Engineering with experience in design of vehicle components or like technology." *Id.* (citing Ex. 2021 ¶ 57).

Both parties' proposals require a Bachelor's degree or a Master's degree in Mechanical Engineering but differ on the number of years of experience ("1–2 years of experience" versus "three years' experience") and from where the experience comes ("design work related to optimal mechanical and structural design" or "design of mechanical elements and structures" versus "vehicle component design and like technology" or "design of vehicle components or like technology"). Pet. 8; PO Resp. 14.

Based on the full record, we find that Patent Owner's proposed level of ordinary skill in the art is consistent with the '993 patent and the asserted prior art. PO Resp. 17 (citing Ex. 2016 ¶ 48). Our analysis below, however, would not change if we applied Petitioner's proposed level of ordinary skill in the art, because it specifies experience in "optimal mechanical and structural design," which would be a part of the "design of vehicle components and like technology."

C. Declarants

Patent Owner contends that "Petitioner's generalist expert does not appear to meet these requirements," but its "technical expert (Dr. Kim Parnell) held a Ph.D. in Mechanical Engineering and had extensive

experience in the design of vehicle components and/or like technology." PO Resp. 14 (citing Ex. 2021 ¶¶ 4–13).

Petitioner replies that its declarant meets both parties' proposed level of ordinary skill and has experience in design of mechanical structures and components. Pet. Reply 1–2 (citing Ex. 2019, 233:22–237:2, 239:5–250:19, 251:24–280:8); Tr. 9:21–10:24, 24:8–25:11. Petitioner also argues that Patent Owner's declarant appears to have experience with four-wheeled vehicles, not bicycles or motorcycles. *Id.* at 2 (citing PO Resp. 2 n.2; Ex. 1024 ¶¶ 11–13; Ex. 1026, 17:7–18:5; Ex. 2021 ¶ 58; Ex. 2021, 77).

Petitioner's declarant has a Ph.D. in Mechanical Engineering with "over 30 years of experience in teaching and directing research related to mechanical engineering and precision machine design." Ex. 1003 ¶ 4. Based on the full record, we find that his experience "related to mechanical engineering and precision machine design" sufficiently meets or exceeds "experience in design of vehicle components or like technology," as proposed by Patent Owner (PO Resp. 14).

Petitioner's declarant would, thus, be a person of ordinary skill in the art under either party's proposed level of ordinary skill in the art. Therefore, we see no reason to give less weight to the opinions of Petitioner's declarant. *See also* Tr. 39:21–40:22 (confirming that the argument is about how much weight to give to the testimony).

D. Claim Construction

In an *inter partes* review, the claims are construed

> using the same claim construction standard that would be used to construe the claim in a civil action under 35 U.S.C. [§] 282(b), including construing the claim in accordance with the ordinary and customary meaning of such claim as understood by one of

> ordinary skill in the art and the prosecution history pertaining to the patent.

37 C.F.R. § 42.100(b); *see Phillips v. AWH Corp.*, 415 F.3d 1303, 1312–13 (Fed. Cir. 2005) (en banc).

Petitioner states that "[n]o terms need construction to resolve the controversy in this forum." Pet. 9 (citing Ex. 1003 ¶ 30). We did not need to interpret expressly any claim term for institution. Inst. Dec. 14. "Patent Owner agrees that the '993 Patent's claim terms require no special claim construction for purposes of denying this Petition." PO Resp. 13.

Petitioner states that "a vertical plane of travel of the bicycle" and "a thickness of the wall at any point in the lower section of the body varying as a function of the cross-sectional angle of the point relative to the plane of travel" have been construed in related litigation. Pet. Reply 2–5 (citing Ex. 1001, 1:8–14, Fig. 1; Ex. 1024 ¶¶ 18, 20, 22, 24, 52–53; Ex. 1025, 8, 10; Ex. 2021 ¶ 43). Petitioner, however, contends that "the Board need not expressly construe these terms." *Id.* at 2.

Based on the full record, we determine that express claim interpretation is not necessary to determine whether Petitioner shows a reasonable likelihood of prevailing. *Realtime Data, LLC v. Iancu*, 912 F.3d 1368, 1375 (Fed. Cir. 2019) ("The Board is required to construe 'only those terms that . . . are in controversy, and only to the extent necessary to resolve the controversy.'") (quoting *Vivid Techs., Inc. v. Am. Sci. & Eng'g, Inc.*, 200 F.3d 795, 803 (Fed. Cir. 1999)).

E. Asserted Obviousness Based on Denk and Moechnig

1. Denk (Ex. 1006)

Denk's "lightweight component . . . , at least in part, has an essentially tubular body with a defined outer cross-sectional contour and a defined inner

cross-sectional contour." Ex. 1006, code (54). "[T]he inner cross-sectional contour and the outer cross-sectional contour of the component are designed in such a way that the change in the wall thickness along the cross section takes place essentially continually." *Id.*; *see also id.* at col. 3 (describing that "the change in the contour of the outer and/or inner cross section takes place continually" and "the lightweight component . . . may also have a change in the wall thickness along its length").

"One particularly important field of application of lightweight components is bicycle construction." Ex. 1006, col. 1. According to Denk, "particularly high loads occur in the vertical plane of the frame, since the weight of the rider acts essentially in the vertical direction, and the impact loads acting on the front and rear wheel likewise essentially occur within a vertical plane." *Id.* at col. 2. Denk "allows the cross section of the tubular portion of the lightweight component to be designed in such a way that the force absorption capability of the components of a bicycle frame in the vertical frame direction is greater than in an arbitrary orientation perpendicular to this plane." *Id.*

"A circular ring-shaped outer cross-sectional contour is to be preferred for visual and possibly also technical reasons, resulting in a lightweight component in which the different wall thickness distribution is defined by the inner cross-sectional contour." Ex. 1006, col. 3. Denk's "lightweight component for bicycles is suitable for practically all tubular components, i.e., top tube, down tube, seat tube, head tube, fork tubes, rear wheel stay, seat posts, handlebars, handlebar stem, and the like." *Id.* at col. 4.

Figures 1a and 1l are below reproduced.

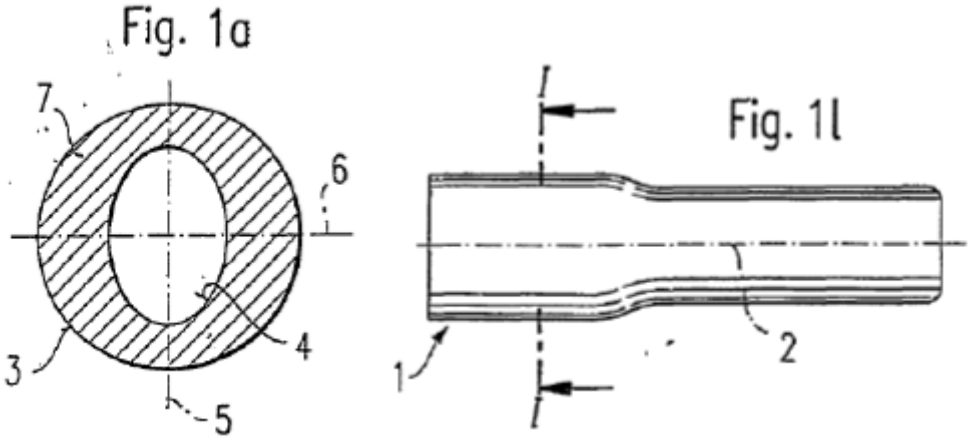

Figure 1a "shows a cross section 2 of a tube having a circular outer cross-sectional contour 3 and an elliptical inner cross-sectional contour 4 that is arranged symmetrically with respect to a center line or center plane 5," and Figure 1l shows elongated tube 1 that "extends symmetrically with respect to a straight center line 2." Ex. 1006, cols. 5, 6. In the embodiment of Figure 1a, "the highest strength and rigidity values occur in a plane that is directed perpendicularly with respect to a line 6 and that perpendicularly intersects the plane of symmetry 5." *Id.* at col. 6.

2. Moechnig (Ex. 1008)

Moechnig relates "particularly, to a lightweight steerer tube." Ex. 1008 ¶ 1. According to Moechnig, "it would be desirable to have a steerer assembly with improved lateral and fore and aft stiffness performance" and that "is robust and lightweight." *Id.* ¶ 9.

Reproduced below is Figure 1 of Moechnig.

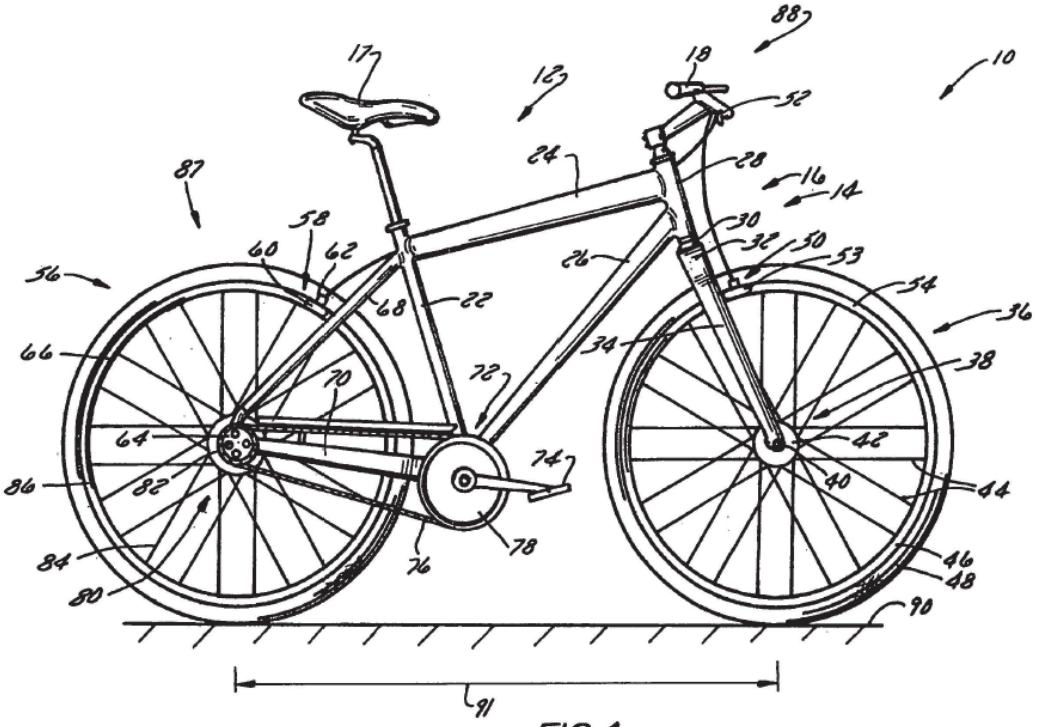

FIG. 1

Figure 1 shows an elevational view of a bicycle with Moechnig's steerer assembly. Ex. 1008 ¶ 17. "Fork assembly 14 is supported by a steerer assembly 16" of Moechnig. *Id.* ¶ 25. "[H]andlebar 18 is positioned forward of seat 17 and is connected to steerer assembly 16 such that rotation of handlebar 18 rotates steerer assembly 16 relative to frame 12." ¶ 26.

"Steerer tube 30 includes an optional cavity 206 formed in body 100." Ex. 1008 ¶ 45. "Optional cavity 206 can extend a majority of the length of steerer tube 30 and provides a lighter steerer assembly 16." *Id.* "Such a construction forms a steerer tube wall 208 that has a thickness that is selected . . . to withstand the loaded interaction between steerer tube 30 and head tube 28." *Id.*

"Decreasing the fore-aft stiffness of the steerer assembly 16 provides two distinct advantages," with one being "a decrease in the amount of force

that is transmitted to the rider" and the other being "the distribution of the load associated with . . . frontal impacts over a greater duration of an impact or deflection event." Ex. 1008 ¶ 49. "Accordingly, steerer assembly 16 can be constructed in a lightweight manner capable of withstanding the fore and aft impact loading as compared to heavier steerer assemblies or constructed to provide greater fore and aft impact performance as compared to steerer assemblies of comparable weight." *Id.*

3. Independent Claim 1

a) "A steerer tube for a bicycle"

Petitioner argues that, to the extent the preamble is limiting, it would have been obvious to use Denk's tubular component as "[a] steerer tube for a bicycle." Pet. 16 (citing Ex. 1003 ¶¶ 57, 63; Ex. 1006, cols. 1, 4; Ex. 1008 ¶¶ 1, 9, 49).

Petitioner cites a portion of Denk that states its "lightweight component for bicycles is suitable for practically all tubular components, i.e., . . . head tube, fork tubes, . . . handlebars, handlebar stem, and the like." Ex. 1006, col. 4. The cited portions of Moechnig describe a steerer tube. Ex. 1008 ¶¶ 1, 9, 49. We credit Petitioner's testimonial evidence regarding the preamble and what the references disclose because the relied-upon portions of the record support it. Ex. 1003 ¶¶ 63, 64; Ex. 1006, cols. 1, 4; Ex. 1007, 1:10–14; Ex. 1008 ¶¶ 1, 9, 49; Ex. 1010, 6:22–26. Patent Owner does not provide a response specifically for the preamble, but does argue whether Denk's tube in Moechnig would have rendered obvious claim 1. *See* PO Resp. 16–30.

Based on the full record before us, Petitioner persuades us, and we find, that, to the extent the preamble is limiting, Denk teaches or suggests a

"tube" and Moechnig teaches or suggests a "steerer tube for a bicycle." Below we analyze Petitioner's combination of Denk and Moechnig.

b) "an elongate hollow body arranged around a steering axis located in a vertical plane of travel of the bicycle"

Petitioner argues that Denk discloses, and would have been understood to be, "an elongate hollow body." Pet. 16–17 (citing Ex. 1003 ¶ 65; Ex. 1006, code (54), cols. 5, 6, Figs. 1a, 1l); *see also id.* at viii (labeling the limitation "1[a]"). Petitioner also argues that, when mounted on Moechnig's bicycle, Denk's longitudinal axis would be arranged around "a steering axis" and "in a vertical plane of travel." *Id.* at 17–19 (citing Ex. 1003 ¶¶ 66–72; Ex. 1006, col. 5; Figs. 1a, 1l; Ex. 1008 ¶¶ 35, 45, Fig. 2–4).

The cited portions of Denk disclose and show "an essentially tubular body with a defined outer cross-sectional contour and a defined inner cross-sectional contour" (Ex. 1006, code (54)), "cross section 2 of a tube having a circular outer cross-sectional contour 3 and an elliptical inner cross-sectional contour 4 that is arranged symmetrically with respect to a center line or center plane 5" (*id.* at col. 6, Fig. 1a) and "elongated tube 1" that "extends symmetrically with respect to a straight center line 2" (*id.* at col. 5, Fig. 1l). We credit Petitioner's testimonial evidence regarding the above-quoted limitation because the cited portions of Denk support it. Ex. 1003 ¶ 65; Ex. 1006, code (54), cols. 5, 6, Figs. 1a, 1l.

We also credit Petitioner's testimonial evidence that, when implemented in Moechnig, Denk's tubular component would have been "arranged around a steering axis located in a vertical plane of travel of the bicycle." Ex. 1003 ¶¶ 66–72. The citations to the record support the testimony. Ex. 1006, col. 5; Figs. 1a, 1l; Ex. 1008 ¶¶ 5, 32, 35, 45, Fig. 1–4.

Patent Owner does not provide a response specifically for the above-quoted limitation, other than whether the combination would have rendered obvious claim 1. *See* PO Resp. 16–30.

Based on the full record before us, Petitioner persuades us, and we find, that Denk teaches or suggests "an elongate hollow body." For the reasons discussed below, we determine that, in the proposed combination, Denk would have been "arranged around a steering axis located in a vertical plane of travel of the bicycle."

c) "the body having upper and lower sections, a segment of the upper section adapted to be joined to a bicycle handlebar, a segment of the lower section adapted to be joined to a crown of a front wheel fork of the bicycle"

Petitioner argues that Denk's tubular component 1 has two joined sections, and that, when implemented in Moechnig, Denk's larger outer contour would have been used as the lower section for the fork and the other section would have been used for joining to a handlebar. Pet. 19–20 (citing Ex. 1003 ¶¶ 73–80; Ex. 1006, col. 3, Fig. 1l; Ex. 1007, 1:44–51; Ex. 1008 ¶¶ 1, 2, 26, 27, Figs. 1–3); *see also id.* at viii (labeling the limitation "1[b]").

Petitioner cites Figure 1l of Denk reproduced below.

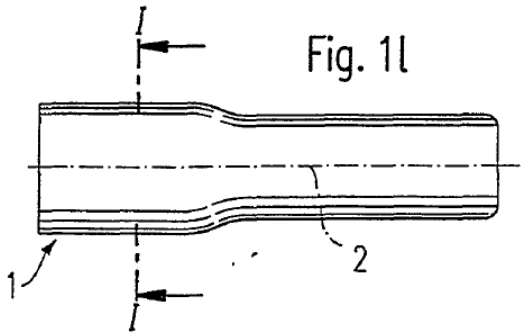

Figure 1l "shows a longitudinal view of the exemplary embodiment" of Figure 1a. *See also* Ex. 1003 ¶ 73 (opining that Denk has two sections). We credit Petitioner's testimonial evidence that, when mounted in

Moechnig, Denk's larger outer contour would have been the lower section joined to a crown of a fork and the upper section would have been joined to the handlebars, because the cited portions of the record support it. Ex. 1003 ¶¶ 74–80, 132; Ex. 1006, col. 3, Fig. 1l; Ex. 1007, 1:44–51; Ex. 1008 ¶¶ 1, 2, 26–28, 35, Figs. 1–3; Ex. 1010, 6:16–26, Figs. 1B–2.

Based on the full record before us, Petitioner persuades us, and we find, that Denk teaches or suggests "the body having upper and lower sections." For the reasons discussed below, we determine that, in the proposed combination, Denk's body would have "a segment of the upper section adapted to be joined to a bicycle handlebar, a segment of the lower section adapted to be joined to a crown of a front wheel fork of the bicycle."

d) "outer surfaces of the upper and lower sections of the body being circular in cross section"

Petitioner argues that Denk discloses the above-quoted limitation. Pet. 22 (citing Ex. 1003 ¶¶ 81–82; Ex. 1006, code (54), cols. 3, 6, Figs. 1a, 1l); *see also id.* at viii (labeling the limitation "1[c]"). Petitioner also argues that it would have been obvious that both sections of Denk are circular in cross-section and one of ordinary skill in the art "would have known how to shape a circular outer cross-sectional contour throughout the tube length based on teachings in Denk." *Id.* at 22–23 (citing Ex. 1003 ¶¶ 81–86).

The cited portions of Denk disclose and show that it has a "circular ring-shaped outer cross-section contour." Ex. 1006, col. 3, Figs. 1a, 1l. We credit Petitioner's testimonial evidence for the above-quoted limitation because the citations to the record support it. Ex. 1003 ¶¶ 81–82; Ex. 1006, cols. 3, 6, Figs. 1a, 1l. We also credit the testimony that Denk discloses how to shape a circular outer cross-sectional contour so that an upper section would have a smaller outer diameter than a lower section because the record

supports it. Ex. 1003 ¶¶ 83–86; Ex. 1006, cols. 4, 9, 10, 13, Figs. 1l, 4a–4c, 5a–5e; Ex. 1007, 1:70–78; Ex. 1010, 6:16–26, Figs. 1B–2.

Based on the full record before us, Petitioner persuades us, and we find, that Denk teaches or suggests "outer surfaces of the upper and lower sections of the body being circular in cross section."

> *e) "the body formed by a wall, a thickness of the wall at any point in the lower section of the body varying as a function of the cross-sectional angle of the point relative to the plane of travel, the wall thickness being at a maximum in the plane of travel of the bicycle"*

Petitioner argues that Denk's elliptical inner cross-sectional contour 4 and circular outer cross-sectional contour 3 would have a varying wall thickness and a maximum thickness at plane 6. Pet. 23–25 (citing Ex. 1003 ¶¶ 46, 87–88; Ex. 1006, cols. 2, 6, Figs. 1a, 1l); *see also id.* at viii (labeling the limitation "1[d]").

The cited portions of Denk disclose and show its tubular body having a wall thickness that has a maximum in plane 6 and a minimum in plane 5 that is perpendicular to plane 6. Ex. 1003, col. 6, Figs. 1a, 1l. Figure 1a of Denk is reproduced below.

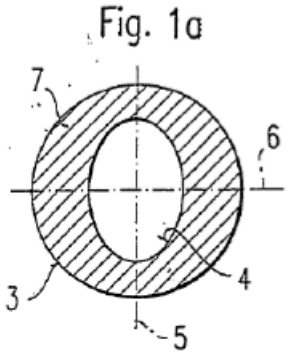

Figure 1a "shows a cross section 2 of a tube having a circular outer cross-sectional contour 3 and an elliptical inner cross-sectional contour 4 that is arranged symmetrically with respect to a center line or center plane

5." Ex. 1006, col. 6. We also credit Petitioner's testimonial evidence regarding what Denk discloses for the above-quoted limitation because Denk supports it. Ex. 1003 ¶ 87; Ex. 1006, col. 6, Figs. 1a, 1l.

Based on the full record, Petitioner persuades us, and we find, that Denk teaches or suggests "the body formed by a wall, a thickness of the wall at any point in the lower section of the body varying as a function of the cross-sectional angle of the point relative to the plane of travel." Below we analyze whether "the wall thickness [is] at a maximum in the plane of travel of the bicycle."

f) Petitioner's Asserted Reason for Combining

(1) Using Denk as a Steerer Tube

Petitioner argues that one of ordinary skill in the art "would have found it obvious to use Denk's lightweight component as a bicycle steerer tube and would have implemented it in a conventional manner." Pet. 13 (citing 1003 ¶¶ 55, 56; Ex. 1006, code (54), cols. 1, 4); *see also id.* at 14 (arguing it was known how to use Denk as a steerer tube) (citing Ex. 1001, 1:19–33; Ex. 1003 ¶ 58).

The cited portions of Denk disclose that its "lightweight component for bicycles is suitable for practically all tubular components, i.e., top tube, down tube, seat tube, head tube, fork tubes, rear wheel stay, seat posts, handlebars, handlebar stem, and the like." Ex. 1006, col. 4. We credit Petitioner's testimonial evidence that Denk would have been suitable for all tubular components and that one of ordinary skill in the art would have known that a bicycle steerer tube is a tubular component, because the cited portions of the record support. Ex. 1003 ¶ 56; Ex. 1006, code (54), cols. 1, 4; Ex. 1007, Figs. 1, 2; Ex. 1008, Figs. 2–6; Ex. 1010, Figs. 1A–2). In

particular, the citations show steerer tubes similar to the tubes listed in Denk. Ex. 1007, Figs. 1, 2; Ex. 1008, Figs. 2–6; Ex. 1010, Figs. 1A–2.

(a) Patent Owner Response

Patent Owner responds that "Denk discloses improvements to be made to a typical ***bicycle frame***." PO Resp. 20–21 (citing Ex. 1006, col. 1, Figs. 1a, 2a–2c). Patent Owner argues that Denk lists bicycle parts for which it would be suitable but "do[es] not specifically identify or disclose that Denk's tubular frame component would be used as a substitute for the ***bicycle's steerer tube, which has unique and completely different set of torsional and fore-aft forces acting on it compared to the listed bicycle frame components***." *Id.* at 21 (citing Ex. 1006, col. 4; Ex. 2021 ¶¶ 60–68). In Patent Owner's view, the listed "'fork tubes' refer only to the fork legs that hold the front wheel, but not to the overall fork itself, and have force considerations more similar to those of a bicycle frame." *Id.* n.6 (citing Ex. 2019, 66:21–68:12, 122:17–123:5; Ex. 2021 ¶ 68).

Patent Owner also responds that "bicycle frames and steerer tubes have differing considerations," making them different, because "a steerer tube is (1) subjected to more twisting torques, along with side-to-side torques, than frame tubes, (2) stressed during use at both ends and at the junction with the frame; and (3) oriented differently in space than frame tubes." PO Resp. 22–23 (citing Ex. 1006, col. 2; Ex. 1007, 1:15–18, 1:44–51; Ex. 2019, 119:2–120:16; Ex. 2020, code (57), ¶¶ 1–9; Ex. 2021 ¶¶ 61, 62). Patent Owner argues that Denk would not have disclosed or suggested how to design a bicycle steerer tube with "forces acting both laterally (side-to-side), longitudinally (fore-aft), and torsionally (twisting)," because "Denk is concerned with rider weight" and "says nothing about how its tubular frame component should be oriented other than for . . . gravity-related

vertical forces." *Id.* at 23–24 (citing Ex. 1006, col. 2; Ex. 2021 ¶¶ 63–64). Patent Owner, thus, argues that one of ordinary skill in the art would have recognized that Denk has "little impact on the steerer tube's design compared to the other forces acting on it." *Id.* at 24 (citing Ex. 2021 ¶¶ 64–65).

(b) Reply Arguments

Petitioner replies that Denk discloses that its tubular component can be used for a bicycle fork, and that a steerer tube is a component of a bicycle fork. Pet. Reply 10–11 (citing Pet. 13; PO Resp. 20–21, 21 n.6; Ex. 1001, 4:58–62, Figs. 1, 2; Ex. 1003 ¶¶ 56–57; Ex. 1006, code (57), cols. 1, 4, 12, claim 18; Ex. 1008 ¶¶ 2–3; Ex. 1010, code (57), 2:11–27; Ex. 1013, 2:45–63, 3:12–57; Ex. 1023, 5:49–55; Ex. 1024 ¶¶ 31–33; Ex. 1026, 91:1–92:12; Ex. 2019, 37:6–39:25, 67:15–25; Ex. 2021 ¶¶ 26, 28, 33, 47–48, 53). Petitioner also replies that Denk is not just applicable to bicycle frames and would have been applicable to steerer tubes. *Id.* at 12 (citing PO Resp. 22–24, 27–28; Ex.1006, code (57), cols. 1, 4; Ex. 1024 ¶¶ 34–37; Ex. 2021 ¶ 62)

Patent Owner replies that Denk does not disclose a steerer tube, is concerned with frame tubes, and does not teach or suggest the specialized considerations for a steerer tube. PO Sur-reply 7–8 (citing PO Resp. 15–16, 20–24; Ex. 2021 ¶¶ 50–55, 60–69). Patent Owner argues that fork tubes are not steerer tubes and a steerer tube is not a component of a frame. *Id.* at 8–10 (citing PO Resp. 21 n.6; Pet. Reply 11; Ex. 1001, 1:12–21, Fig. 2; Ex. 2019, 57:10–16, 66:21–68:12, 122:17–123:5; Ex. 2021 ¶¶ 62, 66, 68).

(c) Petitioner Shows that One of Ordinary Skill in the Art Would Have Used Denk in Moechnig

Denk expressly states that that its "lightweight component for bicycles is suitable for practically all tubular components, i.e., . . . head tube, fork

tubes, . . . handlebars, handlebar stem, and the like." Ex. 1006, col. 4. Because Denk describes "suitab[ility] for *practically all tubular components*," we agree with Petitioner that one of ordinary skill in the art "would have recognized Denk's lightweight tubular component as a suitable option for a bicycle steerer tube because Denk discloses that its lightweight component is suitable for all tubular components of a bicycle frame." Ex. 1006, col. 4; Ex. 1003 ¶ 56 (opining that "Denk's tubular component . . . would have been a suitable . . . option for a bicycle steerer tube"); *see also id.* ¶ 59 (opining that configurations shown in Denk would have been suitable for a steerer tube known in the art) (citing Ex. 1006, col. 8, Figs. 1l, 2a; Ex. 1007, Fig. 1; Ex. 1008, Figs. 2, 3; Ex. 1010, Figs. 1A–2).

Denk also lists tubular components that attach to, or could be, a steerer tube, such as the fork tubes and handlebar stem. Ex. 1006, col. 4; *see also* Ex. 1008 ¶ 26 (stating that "[h]andlebars 18 are connected to a stem or steerer tube 30"). Denk further indicates tubular components beyond those listed by ending with the phrase "and the like." Ex. 1006, col. 4.

Because Denk indicates suitability for tubular components beyond those listed, we do not agree with Patent Owner that Denk is limited to only components of the bicycle frame. PO Resp. 20–21; PO Sur-reply 7–8. We also do not agree with Patent Owner that one of ordinary skill in the art would not have used Denk because of the different considerations for bicycle frames and steerer tubes. PO Resp. 22–24; PO Sur-reply 7–8. The listed "handlebar stem" would be subjected to more twisting torque than frame tubes and stressed at both ends, like a steerer tube. Ex. 1006, col. 4; *see also* Ex. 1008 ¶ 26 (stating that "[h]andlebars 18 are connected to a stem or steerer tube 30 that passes through head tube 28 and is rotationally

supported thereby"). The listed "head tube" and "handlebar stem" are also oriented in space similar to a steerer tube. Ex. 1006, col. 4; Ex. 1008 ¶ 26.

We also credit Petitioner's testimony that one of ordinary skill in the art would have known how to use Denk as a steerer tube for a bicycle. Ex. 1003 ¶ 58. We find such implementation would be well within both parties' proposed level of ordinary skill in the art. Pet. 8; PO Resp. 14; Ex. 1003 ¶ 23; Ex. 2021 ¶ 57.

For the reasons above, based on the full record, Petitioner persuades us, and we determine, that one of ordinary skill in the art would have considered using Denk's tubular component as a steerer tube in Moechnig and would have known how to implement Denk in Moechnig as a steerer tube.

(2) Motivation

Petitioner argues that the ordinarily skilled artisan "would have been motivated to use Denk's lightweight component as a bicycle steerer tube to have the advantages of improved mechanical strength and reduced weight," as disclosed in Denk and known in the art. Pet. 13–14 (citing Ex. 1006, cols. 1–2; Ex. 1007, 1:10–14; Ex. 1010, 6:22–26). Petitioner also argues that lighter weight and added reinforcement were desirable. *Id.* at 14 (citing Ex. 1003 ¶ 57; Ex. 1006, cols. 1–2), 15 (citing Ex. 1003 ¶ 59; Ex. 1006, col. 3; Ex. 1007, 1:44–51).

Petitioner cites portions of Denk that describe, "for the same overall strength and rigidity, the weight may be reduced, or for the same weight, the strength and rigidity may be significantly increased in the load direction specified by the design." Ex. 1006, col. 2. Denk also "provide[s] a lightweight component which may be adapted in a particularly advantageous manner to the loads that occur during use, and which thus has a particularly

favorable ratio of strength properties and rigidity properties with regard to the weight." *Id.* at col. 1.

(a) Patent Owner Response

Patent Owner responds that Petitioner fails to explain and provide evidence about how Denk when combined with Moechnig would have improved mechanical strength and reduced weight. PO Resp. 24–25 (citing Pet. 13–14, 16; Ex. 1003 ¶ 57). According to Patent Owner, Petitioner argues that Denk would have weight but also require additional reinforcement, such as a thicker wall. *Id.* at 25 (citing Pet. 13, 15).

Patent Owner argues that "Denk provides no indication that it would be more lightweight than a standard steerer tube with equal wall thickness and circular profile" or weigh less than Moechnig. PO Resp. 25 (citing Ex. 2021 ¶ 69). Patent Owner also argues that Petitioner speculates about reduced weight with conclusory statements and about added strength. *Id.* at 25–26, 27.

(b) Reply Arguments

Petitioner replies that Denk's actual weight and strength is not relevant to the motivation for using Denk as a steerer tube, because one of ordinary skill in the art would have understood how to design a suitable tube based on Denk's teachings. Pet. Reply 12–13 (citing PO Resp. 25–26; Ex. 1024 ¶ 38; Ex. 2021 ¶ 69).

Patent Owner replies that Petitioner provides no evidence for its purported advantages of weight and strength. PO Sur-reply 18 (citing Pet. 13–14, 16; PO Resp. 24–27). Patent Owner also replies that Petitioner argues a new motivation to combine. *Id.* at 3 (citing Pet. Reply 1, 5–6, 9–10, 12–16), 18 (citing Pet. Reply 12–13). Patent Owner argues that Moechnig, the only reference that considers an asymmetrically reinforced steerer tube,

shows that one of ordinary skill in the art would have increased strength in the lateral direction, and that Moechnig is more than "a particular use case." *Id.* at 19 (citing Pet. Reply 14–15). Patent Owner also argues that Petitioner cites other references that do not discuss any improvements to the standard steerer tube and no reference teaches that the highest loads on a steerer tube are in the fore-and-aft direction. *Id.* (citing Pet. Reply 14–16).

Patent Owner further replies that Petitioner newly argues without support that the highest loads on a steerer tube are in the plane of travel and that this new motivation to combine should be ignored. PO Sur-reply 19 (citing Pet. Reply 15; Ex. 1024 ¶ 44), 23 (citing Pet. Reply 1, 19–23).

(c) Petitioner Shows a Motivation to Combine

Because Petitioner cites a portion of Denk that states, "for the same overall strength and rigidity, the weight may be reduced, or for the same weight, the strength and rigidity may be significantly increased in the load direction specified by the design," we find that Denk provides a motivation to use its tubular component in the bicycle of Moechnig. Pet. 13–14; Ex. 1006, col. 2. We also credit Petitioner's testimonial evidence regarding the motivation to combine because the record supports it. Ex. 1003 ¶ 57; Ex. 1006, cols. 1–2; Ex. 1007, 1:10–14; Ex. 1008 ¶¶ 1, 9, 49; Ex. 1010, 6:22–26. The record shows that lightweight components were desirable. *See, e.g.*, Ex. 1006, col. 1; Ex. 1008 ¶ 1.

We also agree with Petitioner that one of ordinary skill in the art would have reduced weight or improved strength relative to Moechnig, because Denk describes reducing weight or increasing strength as "specified by the design," indicating that it is a matter of ordinary skill in the art to achieve less weight or more strength when applying Denk to Moechnig. Ex. 1006, col. 2.

Thus, we do not agree with Patent Owner that Petitioner fails to show how Denk combined with Moechnig would have reduced weight or increased strength, because Denk itself indicates it would have done so. PO Resp. 24–25; Ex. 1006, col. 2 ("for the same overall strength and rigidity, the weight may be reduced"). We also do not agree with Patent Owner that "Denk provides no indication that it would be more lightweight than a standard steerer tube with equal wall thickness and circular profile," because Denk provides an indication. PO Resp. 25; Ex. 1006, col. 2.

Based on the full record, Petitioner persuades us, and we determine, that one of ordinary skill in the art would have been motivated to combine Denk and Moechnig.

(3) "the wall thickness being at a maximum in the plane of travel of the bicycle"

Petitioner argues that one of ordinary skill in the art "would have found it obvious to align plane 6 of Denk's tube 1, which has the maximum wall thickness, with the plane of travel." Pet. 25 (citing Ex. 1003 ¶¶ 89–92). Petitioner contends that it would have been obvious "to have the areas of minimum thickness orthogonal to the plane of travel to improve lightness of the steerer tube in areas of lesser loads." *Id.* at 26 (citing Ex. 1003 ¶¶ 89–92).

(a) Patent Owner Response

Patent Owner responds that Moechnig teaches "that the maximum wall thickness should be in the lateral, not the fore-aft, direction of the bicycle's travel." PO Resp. 16, 17 (citing Ex. 1008, code (57), ¶¶ 6–10, 49–50; Ex. 2021 ¶¶ 34–36), 18–20 (citing Ex. 1008 ¶¶ 5, 8, 49–50; Ex. 2021 ¶ 39). Patent Owner argues that one of ordinary skill in the art would have understood that Moechnig "teaches that the focus should be on decreasing

fore-aft rigidity, stiffness, and strength, and increasing the same aspects in the lateral direction," but "[t]he '993 Patent does the opposite." *Id.* at 20 (citing Ex. 2021 ¶ 40).

Patent Owner also argues that "Moechnig does not disclose a varying wall thickness for the interior or exterior of the steerer tube body 100." PO Resp. 17 (citing Ex. 1008, Figs. 4–6). Patent Owner further argues that, during prosecution, Moechnig was overcome because it teaches the opposite of what the claim requires. *Id.* (citing Ex. 1002, 180, 185–187).

Turning to Denk, Patent Owner responds that Petitioner's declarant admitted that Denk does not disclose or suggest a steerer tube with a varying wall thickness that has its maximum in the bicycle's plane of travel. PO Resp. 20 (citing Ex. 2019, 80:9–87:25). Patent Owner also argues that, even if the ordinarily skilled artisan would have added strength, such an artisan would have "increase[d] strength in the lateral direction of the steerer tube, as taught by Moechnig." *Id.* at 26 (citing Ex. 2021 ¶ 69). In Patent Owner's view, Petitioner is engaging in classic hindsight and ignores the express teachings of its modifying reference. *Id.* at 26–27.

Patent Owner also responds that one of ordinary skill in the art would not have found it obvious to modify Denk in view of Moechnig so that the maximum wall thickness of the steerer tube was in the fore-and-aft direction of the bicycle. PO Resp. 27–30. Patent Owner argues that the only support comes from the conclusory remarks of Petitioner's declarant. *Id.* at 27–28 (citing Pet. 15–16, 25–26), 29 (citing Pet. 15, 25; Ex. 1003 ¶¶ 46, 59, 89–92; Ex. 2021 ¶ 78).

Patent Owner also argues that vertical loads would have been irrelevant to steerer tubes and "the art of record specifically contradicts Petitioner's conclusory argument that the highest or most concerning loads

occur in the fore-aft direction of travel." PO Resp. 28 (citing Ex. 2021 ¶ 76). The record, Patent Owner argues, shows that lateral forces or loading were of most concern. *Id.* at 28–29 (citing Ex. 1008, code (57), ¶¶ 4, 8, 49; Ex. 2021 ¶ 77). Patent Owner contends that Moechnig "expressly teaches stronger wall rigidity and stiffness in the lateral direction" and one of ordinary skill in the art would not have "orient[ed] Denk's tubular frame component to gain strength in the fore-aft direction when the very same modifying prior art says to do the opposite." *Id.* (citing Ex. 1008 ¶ 49; Ex. 2021 ¶ 77).

(b) Petitioner's Reply

Petitioner replies that steerer tubes were known to bear the highest loads in the plane of travel. Pet. Reply 5–8 (citing PO Resp. 13; Ex. 1003 ¶¶ 89–91; Ex. 1013, 2:45–59, 4:20–29, 4:46–57, 5:10–16, 8:53–57, Figs. 1, 2A, 5A; Ex. 1023, 4:21–29; Ex. 1024 ¶¶ 23–27; Ex. 2021 ¶ 52). Petitioner argues that such knowledge was understood during examination. *Id.* at 9 (citing Ex. 1002, 24–38, 42; Ex. 1004, 10–12, 18, 19; Ex. 1024 ¶ 29). Petitioner, thus, argues that one of ordinary skill in the art "would have known to increase the thickness of the tube in the plane of travel (where loads are highest) to increase the strength and rigidity of the tube in that plane." *Id.* at 10 (citing Ex. 1006, col. 2; Ex. 1009, 6:14–21, 7:29–8:3; Ex. 1024 ¶ 30).

Petitioner also replies that, because steerer tubes were known to have highest loads in the plane of travel, one of ordinary skill in the art would have oriented Denk so that maximum wall thickness is aligned with the plane of travel. Pet. Reply 13 (citing Ex. 1006, col. 2; Ex. 1013, code (57), 1:49–60; Ex. 1024 ¶ 38). Petitioner also argues that one of ordinary skill in the art would have been motivated to align Denk's maximum wall thickness

with the plane of travel because Denk teaches bicycle frames need strength and rigidity in the vertical plane of the frame. *Id.* at 13–14 (citing Ex. 1006, cols. 1–2; Ex. 1024 ¶¶ 39–40.

Turning to Moechnig, Petitioner replies that it does not contradict knowledge that steerer tubes bear the highest load in the plane of travel, and, instead, aims to achieve the benefits of decreasing the force transmitted to the rider and distributing the load over a greater duration of the impact. Pet. Reply 14–15 (citing Ex. 1008 ¶ 49; Ex. 1024 ¶¶ 23–30, 43). In Petitioner's view, Moechnig teaches a preferred use of providing different lateral and fore-and-aft performances. *Id.* at 15 (citing Ex. 1008 ¶ 49; Ex. 1013, 1:30–48; Ex. 1024 ¶ 44). Petitioner argues that Moechnig was relied only for its teaching of mounting a steerer tube, not for a motivation to increase stiffness and strength in the fore-and-aft direction. *Id.* at 16 (citing Pet. 13–15, 51, 54; Ex. 1001, 1:8–32, Figs. 1, 2; Ex. 1003 ¶¶ 38–39; Ex. 2021 ¶ 129).

Petitioner further replies that it was known to take into account stresses involved and to tailor structures to its specific requirements. Pet. Reply 14 (citing Ex. 1006, col. 2; Ex. 1009, 7:29–8:3; Ex. 1013, 1:49–60). Petitioner argues that it is a matter of design choice to increase the stiffness or strength in the fore-and-aft direction or increase the compliance to bend with the load. *Id.* at 15–16 (citing Ex. 1024 ¶ 44). Petitioner also replies that Patent Owner's contention is contrary to designing for a specific use and contrary to prior art that teaches increasing strength and rigidity in the plane of travel. *Id.* at 16 (citing Ex. 1006, cols. 1–22; Ex. 1013, 1:45–60; Ex. 1023, 4:21–29; Ex. 1024 ¶ 45).

(c) Patent Owner Sur-Reply

Patent Owner replies that Moechnig is somewhat relevant to non-cylindrical steerer tubes and other purported evidence should be given no

weight. PO Sur-reply 3–4. Patent Owner argues that Moechnig teaches the opposite of what is claimed. *Id.* at 4 (citing PO Resp. 12; Ex. 1008 ¶¶ 6–10, 49–50; Ex. 2021 ¶ 53), 18. Patent Owner also argues that, even though another reference, Valat, teaches a steerer tube, it does not teach the claimed maximum wall thickness in the plane of travel. *Id.* (citing Pet. 49–50, 61–66; PO Resp. 31–37; Pet. Reply 17–23). Patent Owner further argues that other cited evidence also fails to teach the claimed maximum wall thickness. *Id.* at 4–5 (citing Pet. Reply 1).

Patent Owner also replies that Petitioner attempts to introduce new arguments and new evidence beyond what was presented in the Petition. PO Sur-reply 5 (citing Pet. 25–26, 52–53; Inst. Dec. 19–20; Pet. Reply 1, 5–6, 9–10, 12–16). Patent Owner argues that it rebutted Petitioner's misunderstanding of Denk and so Petitioner asserts a new motivation of aligning the maximum wall thickness with the plane of travel to increase strength and rigidity in the areas of highest load. *Id.* at 6–7 (citing Pet. 25, 52–53; PO Resp. 20–24; Pet. Reply 1, 5–10, 13–15, 21; Ex. 1003 ¶ 46; Ex. 1005, col. 2; Ex. 2021 ¶¶ 60–68). Patent Owner also argues that Petitioner relies on new evidence. *Id.* at 7 (citing Ex. 1013; Ex. 1023).

Patent Owner argues that the new evidence focuses on fork tubes, not steerer tubes, or do not relate to reinforcing a steerer tube in the plane of travel. PO Sur-reply 10–16 (citing PO Resp. 15–16, 20–24; Pet. Reply 5–6, 8; Ex. 1001, Figs. 1, 3; Ex. 1009, 2:23–31, 3:26–31, 4:14–19, 4:24–28, 5:25–6:10, Figs. 3, 4; Ex. 1013, code (57), 1:64–2:8, 2:45–3:65, 4:10–19, Figs. 1, 2A; Ex. 1023, code (57), 2:8–11, 2:23–24, 4:29–45, 5:49–6:7, Figs. 1a, 1b, 1l; Ex. 2019, 57:10–16; Ex. 2021 ¶¶ 60–69). Patent Owner also argues that statements made during prosecution do not bear on patentability or knowledge in the art and are hearsay without support from one of

ordinary skill in the art. *Id.* at 17 (citing Pet. Reply 9–10; Ex. 1002, 26, 28–30, 40–44; Ex. 1004).

(d) Petitioner Shows the Limitation

Petitioner points to paragraphs 89–92 of its declaration for support of its argument. Pet. 25–26. We agree with Petitioner's declarant that Denk "discloses that the continuous change in the wall thickness should be adapted to meet the requirements of strength and rigidity while reducing weight." Ex. 1003 ¶ 89 (citing Ex. 1006, code (54), cols. 1, 2, 8, 9, Fig. 1a); Ex. 1006, col. 2 (describing that "the profile of the wall thickness over the cross section may be optimally adapted to the actual requirements with regard to strength and rigidity").

We also agree with Petitioner's declarant that "Denk discloses that high loads occur in the vertical plane of a bicycle frame, and so force absorption capability of bicycle components should be greater in the vertical plane." Ex. 1003 ¶ 89; Ex. 1006, col. 2 ("A consideration of the load on a bicycle frame, for example, shows that particularly high loads occur in the vertical plane of the frame, since the weight of the rider acts essentially in the vertical direction, and the impact loads acting on the front and rear wheel likewise essentially occur within a vertical plane.").

Based on the cited portions of Denk, we find that Denk teaches or suggests orienting Denk so that its maximum wall thickness is in the vertical plane. *See also* Ex. 1003 ¶ 91 (opining that one of ordinary skill in the art would have placed the maximum wall thickness in the plane of travel) (citing Ex. 1006, col. 2). We, therefore, agree that, based on the cited portions of Denk's disclosure, one of ordinary skill in the art would have:

> align[ed] plane 6 of Denk's tube 1 with the plane of travel, i.e., put the areas of maximum wall thickness (resulting from the

> elliptical inner contour and circular outer contour) in the plane of travel of the bicycle because the loads on the steerer tube are maximum in the plane of travel, and to have the areas of minimum thickness orthogonal to the plane of travel to improve lightness of the steerer tube in areas of lesser loads.

Ex. 1003 ¶ 89.

Because Denk teaches or suggests "wall thickness being at a maximum in the plane of travel of the bicycle" (Ex. 1006, col. 2), we do not agree that Petitioner is engaging in impermissible hindsight, as argued by Patent Owner (PO Resp. 26–27). Nor do we agree that Petitioner's declarant provides conclusory remarks because Denk supports the testimony. *Id.* at 27–29.

Moechnig describes that "[d]ecreasing the fore-aft stiffness of the steerer assembly 16 provides two distinct advantages:" (1) "a decrease in the amount of force that is transmitted to the rider therein increasing the comfort level" and (2) "the distribution of the load associated with testing and/or frontal impacts over a greater duration of an impact or deflection event." Ex. 1008 ¶ 49; *see also id.* ¶ 8 (describing an undesirable increase in rigidity in the fore-and-aft direction that "detrimentally affects the fore and aft stiffness performance of the steering assembly").

The full record shows that, if "particularly high loads [that] occur in the vertical plane of the frame" are of concern, then one of ordinary skill in the art would have oriented Denk's tube as argued by Petitioner to be "optimally adapted to the actual requirements with regard to strength and rigidity." Pet. 25–26; Ex. 1003 ¶ 89; Ex. 1006, col. 2. The full record also shows that, if "increasing the comfort level" and "distribution of the load associated with . . . frontal impacts over a greater duration of an impact" are

of concern, then Denk's tube would have been oriented in the lateral direction. Ex. 1008 ¶ 49; Ex. 2021 ¶ 77.

We agree with the parties that one of ordinary skill in the art would have taken into account the alternatives described in Denk and Moechnig and considered their associated advantages (and disadvantages). Ex. 1003 ¶ 89; Ex. 2021 ¶ 77. We, thus, determine that, based on the full record, one of ordinary skill in the art would have made Petitioner's proposed combination if "high loads in the vertical plane of the frame" were the greater concern, even if it would lead to a decrease in comfort level or impact loads being distributed over a lesser duration. *See* Ex. 1006, col. 1 (stating that, "in particular for bicycles that are used off-road, high impact loads may occur which result in *stringent requirements for strength*") (emphasis added).

Thus, based on the full record, Petitioner persuades us, and we determine, that one of ordinary skill in the art would have implemented Denk in Moechnig so that "the wall thickness [is] at a maximum in the plane of travel of the bicycle," as required by claim 1.

(4) Combination of Known Elements

According to Petitioner, the proposed combination would have been combining known elements according to their established functions to yield predictable results. Pet. 15–16 (citing Ex. 1003 ¶¶ 60–61). We credit Petitioner's supporting testimony because, for the reasons above, the record supports it. Ex. 1003 ¶ 60. Patent Owner disputes that the combination would have rendered obvious claim 1. *See* PO Resp. 16–30.

For the reasons above, based on the full record, we agree with Petitioner that implementing Denk in Moechnig would have been combining

known elements according to their established functions to yield predictable results.

(5) Reasonable Expectation of Success

Petitioner argues that there would have been a reasonable expectation of success in making the proposed combination because the combination "would have required nothing more than the application of ordinary skill and basic knowledge of bicycle hardware." Pet. 15 (citing Ex. 1003 ¶ 60; Ex. 1006, col. 3; Ex. 1008 ¶ 2; Ex. 1010, code (57)).

We credit Petitioner's testimonial evidence regarding reasonable expectation of success, because the cited portions of the record support it. Ex. 1003 ¶ 60; Ex. 1006, col. 3; Ex. 1008 ¶ 2; Ex. 1010, code (57)). Patent Owner does not provide a response regarding reasonable expectation of success. *See* PO Resp. 16–30.

Based on the full record, we determine that one of ordinary skill in the art would have had a reasonable expectation of success in implementing Denk's tubular component as a steerer tube in Moechnig in the manner asserted.

g) Objective Indicia of Non-obviousness

Patent Owner does not present any arguments or evidence regarding any objective indicia of nonobviousness for any of the challenged claims. *See* PO Resp.

h) Petitioner Shows by a Preponderance of the Evidence that Claim 1 is Unpatentable

"Once all relevant facts are found, the ultimate legal determination [of obviousness] involves weighing of the fact findings to conclude whether the claimed combination would have been obvious to an ordinary artisan." *Arctic Cat Inc. v. Bombardier Recreational Prods. Inc.*, 876 F.3d 1350, 1361

(Fed. Cir. 2017) (quoting *In re Cyclobenzaprine Hydrochloride Extended-Release Capsule Patent Litig.*, 676 F.3d 1063, 1068–69 (Fed. Cir. 2012)). Above, based on full record before us, we provide our factual findings regarding (1) the level of ordinary skill in the art, (2) the scope and content of the prior art, (3) any differences between the claimed subject matter and the prior art, and (4) objective evidence of nonobviousness.

In particular, we find that (1) Patent Owner's proposed level of ordinary skill in the art is consistent with the prior art of record, (2) Denk and Moechnig teach or suggest all the limitations of claim 1, (3) one of ordinary skill in the art would have combined Denk and Moechnig in the manner asserted with a reasonable expectation of success, and (4) no objective evidence of nonobviousness has been presented in relation to any of the challenged claims. Weighing these underlying factual determinations, a preponderance of the evidence persuades us that claim 1 of the '993 patent is unpatentable over Denk and Moechnig. *Arctic Cat*, 876 F.3d at 1361.

4. Remaining Challenged Claims

Claims 2–4, 6, 8, 10, 12, 14–18, 20, 22, 24, 26–29, 33–38, 40, 42, 44, 46–49, 53, and 56–60 ultimately depend from claim 1. Petitioner argues with citations to the record that Denk and Moechnig would have rendered obvious these dependent claims. Pet. 28–45. For independent claim 61 and its dependent claims 62 and 63, Petitioner argues that its proposed combination would have also rendered obvious these claims with support from the record. Pet. 26–28, 32–33.

a) Claims 2, 3, 4, 6–8, 16–18, 20, 22, 27–29, 36–38, 40, 42, and 61–63

Claim 2 recites "wherein an outer diameter of the lower section of the body is greater than an outer diameter of the upper section of the body."

Ex. 1001, 8:20–22. Claims 16, 27, 36, and 47 recite the same limitation. *Id.* at 9:4–6, 9:47–49, 10:18–20, 10:61–63. Claims 3, 4, 6–8, 17, 18, 20, 22, 27–29, 37, 38, 40, 42 depend directly or indirectly from claims 2, 16, 27, 36, and 47. Independent claim 61 and its dependent claims 62 and 63 also require a substantially similar limitation. *Id.* at 11:45–12:25.

Petitioner argues that Denk discloses the limitation. Pet. 26–28 (citing Ex. 1003 ¶¶ 97–98; Ex. 1006, Fig. 1l), 31 (citing Ex. 1003 ¶ 112). We find that Figure 1l of Denk shows the limitation, and we credit Petitioner's testimonial evidence regarding the limitation because the cited portions of the record support it. Ex. 1003 ¶¶ 97–98, 112; Ex. 1006, Fig. 1l; Ex. 1007, 1:44–51. Petitioner also argues with citations to the record that Denk and Moechnig would have rendered obvious independent claim 61 and its dependent claims 62 and 63. Pet. 26–28, 32–33.

Patent Owner responds that Petitioner fails to show that the "outer diameter of the lower section of the body is greater than an outer diameter of the upper section of the body" and, thus, claims 2–4, 6–8, 16–20, 22, 27–29, 36–38, 40, 42, 47–49, and 61–63 are not unpatentable. PO Resp. 56–57. Patent Owner argues that Denk does not disclose a steerer tube and would not be used as a steerer tube. *Id.* at 56 (citing Pet. 10–11, 13–15, 32). Patent Owner also argues that Petitioner presents hindsight-based combinations. *Id.* at 57. Patent Owner also includes in its list some claims that are not challenged by Petitioner, such as claims 7 and 19. *See id.* at 56–57.

For the reasons above, based on the full record, we determine that one of ordinary skill in the art would have used Denk as a steerer tube in Moechnig as claimed. We also determine that Petitioner shows there would have been a reason to make the proposed combination, and, thus, Petitioner is not engaging in impermissible hindsight.

b) Claims 6, 10, 20, 24, 40, and 44

Claims 6, 10, 20, 24, 40, and 44 each recite "wherein an inner surface of the upper section is circular in cross section." Ex. 1001, 8:38–39, 8:51–52, 9:24–25, 9:37–38, 10:38–39, 10:51–52. For these claims, Petitioner argues that Denk and Moechnig each teach or suggest the limitation. Pet. 34–37 (citing Ex. 1003 ¶¶ 118–120; Ex. 1006, cols. 6, 8, Fig. 1a, 1b; Ex. 1007, 1:35–51; Ex. 1008 ¶¶ 35, 36, 38, Figs. 1–4; Ex. 1010, 6:16–26).

The cited portion of Denk discloses that the cross-sectional shape of the tube can change along the tube length, and that the inner cross-sectional shape in one region of the tube may be elliptical as shown in Figure 1a, and may be circular in another region as shown in Figure 1b. Ex. 1006, cols. 6, 8, Figs. 1a, 1b; Ex. 1003 ¶ 118. Denk states that "it is possible for the elliptical inner cross-sectional contour to continually transition into a circular inner cross-sectional contour in a certain area of the tube." Ex. 1006, col. 8. We credit Petitioner's supporting testimony because the cited portions of the record support it. Ex. 1003 ¶ 118; Ex. 1006, cols. 6, 8; Figs. 1a, 1b.

Patent Owner responds that Petitioner fails to show the limitations of claims 6, 10, 20, 24, 40, and 44. PO Resp. 50–56. The arguments, however, are directed to the combination of Valat and Moechnig. *See id.* (citing Pet. 36–37, 76–77; Ex. 1008 ¶ 26; Ex. 2021 ¶¶ 123–124, 126–130). The parties provide reply arguments. Pet. Reply 26–27 (citing Pet. 34–35; PO Resp. 54; Ex. 1003 ¶¶ 117–121; Ex. 1008 ¶¶ 35, 36, 38; Ex. 1024 ¶¶ 69–71); PO Sur-reply 25–26 (citing Ex. 2021 ¶¶ 123, 128).

For the reasons above, based on the full record, we find that Denk teaches or suggests the limitations of claims 6, 10, 20, 24, 40, and 44.

c) Claims 56 and 59

Claims 56 and 59 ultimately depend from claim 1. Claim 56 recites "wherein the minor diameter decreases as a function of proximity to the upper section of the body," and claim 59 recites "wherein the major diameter of the lower section tapers from the second portion of the lower section to the first portion of the lower section." Ex. 1001, 11:30–32, 11:39–41.

For these claims, Petitioner argues that Denk teaches upper and lower sections joined by a gradual taper, that Moechnig teaches a transition over a tapering region in its steerer tube, and their combination would have rendered obvious these claims. Pet. 42–44 (citing Ex. 1003 ¶¶ 135–138; Ex. 1006, col. 8, Fig. 1l; Ex. 1008 ¶¶ 35, 38, 39, Figs. 2, 3); *see also* Pet. Reply 27–28 (arguing similarly) (citing Pet. 42–44, 79, 81; Ex. 1003 ¶¶ 137, 138; Ex. 1008 ¶ 38; Ex. 1024 ¶¶ 72, 73).

The cited portions of Denk disclose and show that the elliptical inner cross-sectional contour of the lower section of the tube can "continually transition" into a circular inner cross-sectional contour. Ex. 1006, col. 8, Fig. 1l; Ex. 1003 ¶ 134. The cited portions of Moechnig disclose and show a tapering region in its steerer tube. Ex. 1008 ¶¶ 35, 38, 39, Figs. 2, 3.

We credit Petitioner's supporting testimony that one of ordinary skill in the art would have understood "that both the major and the minor diameters in the tapering neck region of the tube body decrease as a function of proximity to the upper section of the body." Ex. 1003 ¶ 136. Denk supports that testimony. Ex. 1006, col. 8, Fig. 1l. We also credit the testimony that Denk implemented as a steerer tube "would also have the minor diameter of the lower section of the tube decrease as a function of proximity to the upper section of the tube and have the major diameter taper from the second portion of the lower section to an end region of the first

portion of the lower section" in view of Moechnig's steerer tube. Ex. 1003 ¶¶ 137, 138; Ex. 1008 ¶ 38 ("Both longitudinal and lateral diameters 120, 130 transition from lower radial portion 106 to upper radial portion 110"), Figs. 2, 3.

Patent Owner responds that Petitioner fails to show the limitations of claims 56 and 59 and fails to provide motivation to arrive at their limitations. PO Resp. 47–50 (citing Pet. 42–44, 78–79, 81; Ex. 2019, 99:11–106:24; Ex. 2021 ¶¶ 133, 134, 136); PO Sur-reply 26–27 (citing Pet. Reply 28). Based on our findings above, we do not agree with Patent Owner that Denk fails to disclose an embodiment that "(1) changes its internal shape from a first region to a second region; (2) has one region with an elliptical internal shape and the other with a circular internal shape; and (3) has a taper between the two regions that transitions by tapering the internal diameters of the ellipse." Such an embodiment is encompassed by Denk's disclosure. Ex. 1006, col. 8 (stating that "within the scope of the invention it is also possible for adjacent cross sections to have a different design," "according to the invention an approach is used in which the change in the cross sections in the longitudinal direction takes place continually," and "in particular for the exemplary embodiments according to Fig. 1a it is possible for the elliptical inner cross-sectional contour to continually transition into a circular inner cross-sectional contour in a certain area of the tube, for example in a middle area or in an end area"), Figs. 1a (showing an elliptical cross section), 1b (showing a circular cross section), 1l (showing two sections with a taper in between).

For the reasons above, based on the full record, we find that Denk teaches or suggests the limitations of claims 56 and 59.

d) Petitioner Shows by a Preponderance of the Evidence that Claims 2–4, 6, 8, 10, 12, 14–18, 20, 22, 24, 26–29, 33–38, 40, 42, 44, 46–49, 53, and 56–63 are Unpatentable

Weighing the underlying factual determinations, a preponderance of the evidence persuades us that claims 2–4, 6, 8, 10, 12, 14–18, 20, 22, 24, 26–29, 33–38, 40, 42, 44, 46–49, 53, and 56–63 are unpatentable over Denk and Moechnig.

F. Asserted Obviousness Based on Denk, Moechnig, and Schroeder

1. Schroeder (Ex. 1010)

Schroeder relates to "an improved combination for a steering tube and crown which is used as part of a bicycle fork . . . assembly" and "a molded assembly for a unique combination of a steering tube and crown for use in a two vehicle fork such as a bicycle fork." Ex. 1010, 1:11–13, 4:8–12.

According to Schroeder, "if a bicycle fork assembly is comprised of a steering tube made of resin having carbon fiber composites molded into a crown made of aluminum, the bicycle fork will possess[] a better durability and shock absorbing capabilities." Ex. 1010, 4:22–26. Schroeder's steering tube 10 has thick tube wall section 26, thin tube wall section 28, and section 29 "where the tube is gradually decreased." *Id.* at 6:15–26, Fig. 2.

2. Dependent Claims 31, 51, and 64

Claim 1 and independent claim 64 recite substantially similar limitations. *Compare* Ex. 1001, 8:5–19 *with*, *id.* at 12:26–44. Independent claim 64 additionally recites "the segment of the lower section of the body is joined to the crown of the front wheel fork, the body formed of a material different from the crown of the front wheel fork." *Id.* at 12:34–38.

Claims 31 and 51 ultimately depend from claim 1, and both recite "wherein the segment of the lower section of the body is joined to the crown

of the front wheel fork, the body formed of a material different from the crown of the front wheel fork." Ex. 1001, 9:64–67, 11:11–14.

Petitioner argues with citations to the record that Schroeder teaches the above-quoted limitations of claims 31, 51, and 64. Pet. 48–49. Petitioner also argues that one of ordinary skill in the art would have combined the references in the manner asserted. *Id.* at 47–48.

We determine that Petitioner's contentions regarding these claims are fully supported by the record. Patent Owner does not contest Petitioner's challenges to these claims apart from its contentions regarding claim 1. *See* PO Resp. 16–30, 47–63.

Weighing the underlying factual determinations, a preponderance of the evidence persuades us that claims 31, 51, and 64 are unpatentable over Denk, Moechnig, and Schroeder.

G. Remaining Challenges

Having determined that all of the challenged claims are unpatentable over (1) Denk and Moechnig and (2) Denk, Moechnig, and Schroeder, we need not reach Petitioner's argument that those same claims are also unpatentable over (1) Valat and Moechnig and (2) Valat, Moechnig, and Schroeder. *See SAS Inst. Inc. v. Iancu*, 138 S. Ct. 1348, 1359 (2018) (holding that a petitioner "is entitled to a final written decision addressing all of the claims it has challenged"); *Bos. Sci. Scimed, Inc. v. Cook Grp. Inc.*, 809 F. App'x 984, 990 (Fed. Cir. 2020) (non-precedential) (recognizing that the "Board need not address issues that are not necessary to the resolution of the proceeding" and, thus, agreeing that the Board has "discretion to decline to decide additional instituted grounds once the petitioner has prevailed on all its challenged claims"). Accordingly, we do not reach the other grounds.

III. CONCLUSION[2]

In summary:

Claims	35 U.S.C. §	References/Basis	Claims Shown Unpatentable	Claims Not Shown Unpatentable
1–4, 6, 8, 10, 12, 14–18, 20, 22, 24, 26–29, 33–38, 40, 42, 44, 46–49, 53, 56–63	103(a)	Denk, Moechnig	1–4, 6, 8, 10, 12, 14–18, 20, 22, 24, 26–29, 33–38, 40, 42, 44, 46–49, 53, 56–63	
31, 51, 64	103(a)	Denk, Moechnig, Schroeder	31, 51, 64	
1–4, 6, 8, 10, 12, 14–18, 20, 22, 24, 26–29, 33–38, 40, 42, 44, 46–49, 53, 56–63	103(a)	Valat, Moechnig, Denk[3]		
31, 51, 64	103(a)	Valat, Moechnig, Denk, Schroeder[4]		
Overall Outcome			1–4, 6, 8, 10, 12, 14–18, 20, 22, 24, 26–29, 31, 33–38, 40, 42, 44, 46–49, 51, 53, 56–64	

IV. ORDER

In consideration of the foregoing, it is hereby:

ORDERED that claims 1–4, 6, 8, 10, 12, 14–18, 20, 22, 24, 26–29, 31, 33–38, 40, 42, 44, 46–49, 51, 53, and 56–64 of U.S. Patent No. 10,328,993 B2 have been shown, by a preponderance of the evidence, to be unpatentable; and

FURTHER ORDERED that, because this is a Final Written Decision, the parties to the proceeding seeking judicial review of the decision must comply with the notice and service requirements of 37 C.F.R. § 90.2.

---

[2] Should Patent Owner wish to pursue amendment of the challenged claim in a reissue or reexamination proceeding subsequent to the issuance of this decision, we draw Patent Owner's attention to the April 2019 *Notice Regarding Options for Amendments by Patent Owner Through Reissue or Reexamination During a Pending AIA Trial Proceeding*. *See* 84 Fed. Reg. 16,654 (Apr. 22, 2019). If Patent Owner chooses to file a reissue application or a request for reexamination of the challenged patent, we remind Patent Owner of its continuing obligation to notify the Board of any such related matters in updated mandatory notices. *See* 37 C.F.R. § 42.8(a)(3), (b)(2).

[3] As discussed in Section II.G., we do not reach this ground.

[4] As discussed in Section II.G., we do not reach this ground.

For PETITIONER:

Arpita Bhattacharyya
James Miller
PERKINS COIE LLP
Bhattacharyya-ptab@perkinscoie.com
Miller-ptab@perkinscoie.com

For PATENT OWNER:

Michael J. Hickey
Michael H. Durbin
Richard B. Walsh, Jr.
LEWIS RICE LLC
mhickey@lewisrice.com
mdurbin@lewisrice.com
rwalsh@lewisrice.com