Universal Serial Bus Implementers Forum Full and Low Speed Electrical and Interoperability Compliance Test Procedure

*High Speed Electrical Test Procedures Are Documented Separately

Revision 1.3

February 2004

Microchip Ex. 1021, p. 1
Microchip v. Aptiv
IPR2024-00494

Revision History

Rev	Date	Filename	Comments
1.3RC1	January 2004	USB-IFTestProc1_3RC1.DOC	Posted V1.3 as RC candidate for public review
1.3	September 2003	USB-IFTestProc1_3.DOC	Update document to new Gold Tree. Removed Windows98SE test procedure sections Added Contact Info, Section A.3
1.2.1	27-NOV-2002	USBIF-TestProc1_2.DOC	Added procedure for Re-enumerating Devices in Device Framework Testing. Added procedure to measure "Not Configured" current for devices with two-step Full speed to High Speed enumeration processes. Changed Back-voltage test to include "All" devices.
1.2	26-AUG-2002	USBIF-TestProc1_2.DOC	Corrected procedures for using HSET. Updated graphics to include 5-hub test environment. Replaced CHUB references with HS Gold Tree hub. Added ATEN and IOGEAR "gold" hub to gold tree descriptions. Cleaned up back-voltage section.
1.1	15-APR-2002	USBIF-TestProc1_1.DOC	Updated electrical procedures to use USBHSET instead of USBCHECK, revised interoperability procedures for High Speed devices and added WIN XP as an OS choice
1.0	4-DEC-2001	USBIF-TestProc1.DOC	Updated for High Speed Gold Tree, added USBCV procedures
1.0rc3	30-JAN-2001	USBIF-TestProc1rc3.DOC	remove unconfigured average current test from Interoperability test sections (collect information during Device Framework test)
1.0rc2	12-JAN-2001	USBIF-TestProc1rc2.DOC	add www.usb.org Compliance Page URL
1.0rc1	10-DEC-2000	USBIF-TestProc1rc1.DOC	incorporate latest comments
0.9	15-MAY-2000	USBIF-TestProc09.DOC	release for public review
0.9rc1	14-MAY-2000	USBIF-TestProc09rc1.DOC	incorporate latest comments
0.9rc	1-MAY-2000	USBIF-TestProc09rc.DOC	incorporate comments following March Plugfest
0.7f	27-MAR-2000	USBIF-TestProc07f.DOC	incorporate comments from Kosta Koeman
0.7e	10-MAR-2000	USBIF-TestProc07e.DOC	simplify icons in drawings to save space
0.7d	9-MAR-2000	USBIF-TestProc07d.DOC	add drawings and section details
0.7c	4-MAR-2000	USBIF-TestProc07c.DOC	incorporate comments & section details
0.7b	27-FEB-2000	USBIF-TestProc07b.DOC	continue to add section details
0.7a	26-FEB-2000	USBIF-TestProc07a.DOC	add figures and section details
0.7	20-FEB-2000	USBIF-TestProc07.DOC	Initial draft

Microchip Ex. 1021, p. 2
Microchip v. Aptiv
IPR2024-00494

DISCLAIMER OF WARRANTIES

THIS SPECIFICATION IS PROVIDED "AS IS" AND WITH NO WARRANTIES OF ANY KIND, EXPRESS OR IMPLIED, INCLUDING, WITHOUT LIMITATION, NO WARRANTY OF NONINFRINGEMENT, NO WARRANTY OF MERCHANTABILITY, NO WARRANTY OF FITNESS FOR A PARTICULAR PURPOSE, NO WARRANTY OF TITLE, AND NO WARRANTY ARISING OUT OF ANY PROPOSAL, SPECIFICATION, OR SAMPLE, ALL OF WHICH WARRANTIES ARE EXPRESSLY DISCLAIMED.
WITHOUT LIMITING THE GENERALITY OF THE FOREGOING, USB-IF AND THE AUTHORS OF THE SPECIFICATION DO NOT WARRANT OR REPRESENT THAT USE OF THE SPECIFICATION WILL NOT INFRINGE THE INTELLECTUAL PROPERTY RIGHTS OF OTHERS. USERS OF THE SPECIFICATIONASSUME ALL RISK OF SUCHINFRINGEMENT, AND AGREE THAT THEY WILL MAKE NO CLAIM AGAINST USB-IF OR THE AUTHORS IN THE EVENT OF CLAIMS OF INFRINGEMENT.
USB-IF IS NOT LIABLE FOR ANY CONSEQUENTIAL, SPECIAL OR OTHER DAMAGES ARISING OUT OF THE USE OF THE SPECIFICATION.

LICENSE FOR INTERNAL USE ONLY

USB-IF HEREBY GRANTS A LICENSE TO REPRODUCE AND TO DISTRIBUTE THIS SPECIFICATION FOR INTERNAL USE ONLY. NO OTHER LICENSE, EXPRESS OR IMPLIED, BY ESTOPPEL OR OTHERWISE, IS GRANTED HEREWITH, AND NO LICENSE OF INTELLECTUAL PROPERTY RIGHTS IS GRANTED HEREWITH.
All product names are trademarks, registered trademarks, or servicemarks of their respective owners.

Please send comments via electronic mail to: techsup@usb.org

USB-IF Full and Low Speed Compliance Test Procedure
©Copyright 2000-2003, USB Implementers Forum, Inc.
All rights reserved.

Microchip Ex. 1021, p. 3
Microchip v. Aptiv
IPR2024-00494

Table of Contents

Introduction vi
Purpose vi
Scope vi
A Test Procedure Scenarios – All tests A-1
A.1 Identify System, Hub, or Peripheral as Unit Under Test A-1
A.2 Required Tests A-2
A.2.1 Add-in Cards, Motherboards, and Systems A-2
A.2.2 Full Speed Hubs A-2
A.2.3 High Speed Hubs A-2
A.2.4 High Speed Peripherals A-2
A.2.5 Full Speed Peripherals A-2
A.2.6 Low Speed Peripherals A-3
A.3 Contacting the USB-IF A-3
B Electrical Tests B-1
B.1 Required Equipment and Equipment Setup B-1
B.1.1 'Special' items (test fixtures) to be acquired* through Tektronix or Agilent B-1
B.1.2 standard test equipment B-3
B.1.3 standard/available USB products B-3
B.1.4 General Equipment Setup B-3
B.2 Host or Hub Power Provider (Droop/Drop) Testing B-10
B.2.1 Equipment Used B-10
B.2.2 Drop Testing B-10
B.2.3 Droop Testing B-13
B.2.4 Reporting Results B-16
B.3 Host Downstream Signal Quality Testing B-17
B.3.1 Equipment Used B-17
B.3.2 Equipment Setup for testing Downstream Traffic B-17
B.3.3 Signal Integrity Test - Downstream Signal test B-17
B.3.4 Reporting Results B-21
B.4 Inrush Current Testing B-22
B.4.1 Equipment Used B-22
B.4.2 Equipment Setup B-22
B.4.3 Test Steps B-23
B.4.4 Reporting Results B-23
B.5 Hub Downstream Signal Quality Testing B-24
B.5.1 Equipment Used B-24
B.5.2 Equipment Setup for testing Downstream Traffic B-24
B.5.3 Signal Integrity Test - Downstream Signal test B-24
B.5.4 Reporting Results B-27
B.6 Upstream Signal Quality Testing B-28
B.6.1 Equipment Used B-28
B.6.2 Equipment Setup B-28

Microchip Ex. 1021, p. 4
Microchip v. Aptiv
IPR2024-00494

B.6.3 Test Steps ... B-29
B.6.4 Reporting Results ... B-33
C Device Framework Testing ... C-1
C.1 Equipment Used ... C-1
C.2 Equipment Setup ... C-2
C.2.1 Prepare the Host System ... C-2
C.3 Test Steps ... C-2
C.3.1 All Devices ... C-2
C.3.2 Re-enumerating Devices ... C-7
C.3.3 Non-Hub Devices ... C-8
C.3.4 Hubs ... C-10
C.3.5 Hubs with Embedded Devices ... C-13
C.3.6 All Devices – Measure “Not Configured” and “Configured” Average Current Draw C-14
C.4 Reporting Results ... C-16
D Windows 2000 and Windows XP Peripheral Interoperability Testing ... D-1
D.1 Equipment Used ... D-2
D.1.1 Equipment Setup ... D-4
D.2 Software Used ... D-4
D.2.1 Software Logistical Overview ... D-4
D.2.2 Install Windows 2000 Professional or Windows XP Professional ... D-5
D.3 Initialize the Gold Tree ... D-5
D.4 Interoperability Logistical Overview ... D-7
D.5 Interoperability Test Steps ... D-8
D.5.1 Device Interoperability ... D-8
D.5.2 Hub Interoperability ... D-31
D.6 Measuring Average Current Draw ... D-42
D.7 Reporting Results ... D-44
D.7.1 Interoperability Results ... D-44
E Windows 2000 or Windows XP Host Interoperability Testing ... E-47
E.1.1 Functionality Procedure ... E-48
E.1.2 S0 Interoperability ... E-49
E.1.3 S1 Interoperability ... E-51
E.1.4 S3 Interoperability ... E-52
E.1.5 S4 Interoperability ... E-54
F Back-voltage Testing ... F-1
F.1 Equipment Used ... F-1
F.2 Which Devices Must Perform the Back-voltage Test ... F-2
F.3 Test Steps ... F-3

Microchip Ex. 1021, p. 5
Microchip v. Aptiv
IPR2024-00494

Introduction

The USB-IF Full and Low Speed Electrical and Interoperability Compliance Test Procedure is developed by the USB 2.0 Compliance Committee under the direction of USB-IF, Inc. In addition to other requirements, products must pass the compliance test procedure defined in this document in order to be posted on the USB-IF Integrators List and use the USB-IF logo in conjunction with the said product (if the vendor has signed the USB-IF Trademark License Agreement).

Purpose

The USB-IF Full and Low Speed Electrical and Interoperability Compliance Test Procedure documents a series of tests used to evaluate USB peripherals, On-The-Go devices, and systems operating at full speed and/or low speed. These tests are also used to evaluate the full and low speed operation of USB silicon that has been incorporated in ready-to-ship products, reference designs, proofs of concept and one-of-a-kind prototypes of peripherals, add-in cards, motherboards, or systems.

Scope

The procedures documented here address the compliance of the three groups listed by applying the test procedures identified with each group:

- Add-in cards, motherboards, and systems
  - Power Provider (Droop/Drop) testing
  - Downstream Signal Quality
  - Interoperability
- Full speed and low speed hubs (no high speed support)
  - Power Provider (Droop/Drop) testing
  - Downstream Signal Quality
  - Upstream Signal Quality
  - Device Framework Testing (Chapter 9 and Chapter 11 compliance)
  - Interoperability
  - Average Current Consumption
- Full speed or low speed peripherals.
  - Upstream Signal Quality
  - Device Framework Testing (Chapter 9 compliance)
  - Interoperability
  - Average Current Consumption
- High Speed Peripherals and High Speed Hubs
  - Interoperability
  - High Speed Electrical Tests documented separately

Each test scenario shows the specific list of equipment used in the procedure, the initial equipment setup required, the individual steps used to run the procedure (including any equipment reset that is required between devices), and how the results are reported.

Microchip Ex. 1021, p. 6
Microchip v. Aptiv
IPR2024-00494

A Test Procedure Scenarios – All tests

A.1 Identify System, Hub, or Peripheral as Unit Under Test

Collect the following information before running any tests for later reporting.

1. Device: name of the unit under test
2. Device Description: describe the unit under test
3. Test Suite: identify the test suite or test station – this identification shall uniquely identify the equipment used for the testing should results need to be reproduced.
4. Date Tested: range of testing dates
5. Test Type: system or hub or peripheral
6. Device Category: system or hub or peripheral
   a) System – no further items
   b) Hub
      a. Device Design: no microcontroller (i.e. silicon), microcontroller with USB drivers on same chip, or microcontroller with USB drivers on different chip
      b. Power: bus-powered, self-powered, or both
      c. USB connection: captive cable or standard cable with A and B plugs
      d. Drivers: shall test with those provided by operating system
      e. Speed: High Speed or Full Speed
   c) Peripheral
      a. Device Design: no microcontroller (i.e. silicon), microcontroller with USB drivers on same chip, or microcontroller with USB drivers on different chip
      b. Power: bus-powered, self-powered, or both
      c. Drivers (source of drivers): device vendor, operating system, or third party
      d. USB connection: captive cable or standard cable with A and B plugs
      e. Speed: High Speed, Full-speed or Low-speed
7. Test Suite Passed: this is determined after all appropriate test have been run

Microchip Ex. 1021, p. 7
Microchip v. Aptiv
IPR2024-00494

A.2 Required Tests

Compliance testing requires that the unit under test pass all test procedures listed for its category.

A.2.1 Add-in Cards, Motherboards, and Systems

- B.2 Host or Hub Power Provider (Droop/Drop) Testing
- B.3 Host Downstream Signal Quality Testing
- One or more Host Interoperability Testing procedures. These test procedures are operating system specific – a host may be submitted for testing with multiple operating systems; passing any host interoperability test procedure is sufficient for this portion of compliance testing.

A.2.2 Full Speed Hubs

- B.4 Inrush Current Testing
- B.6 Upstream Signal Quality Testing
- B.2 Host or Hub Power Provider (Droop/Drop) Testing
- B.5 Hub Downstream Signal Quality Testing (Eye pattern testing on hub downstream ports is for informational purposes only. **EOP dribble, an allowable distortion of the last bit before the hub EOP, will cause Matlab USB script failures even though the signal quality is within allowable limits.** This is a limitation of the software and should not reflect on the overall test result for the hub.)
- C. Device Framework Testing
- H. Back-voltage Testing
- One or more Device Interoperability Testing procedures. These test procedures are operating system specific – a hub may be submitted for testing with multiple operating systems; failing any interoperability test procedure causes the hub to fail compliance testing.

A.2.3 High Speed Hubs

- All Full Speed Hub Tests
- High Speed Electrical Tests documented elsewhere.

A.2.4 High Speed Peripherals

- All Full Speed Peripheral Tests
- High Speed Electrical Tests documented elsewhere

A.2.5 Full Speed Peripherals

- B.4 Inrush Current Testing
- B.6 Upstream Signal Quality Testing

Microchip Ex. 1021, p. 8
Microchip v. Aptiv
IPR2024-00494

- C. Device Framework Testing
- H. Back-voltage Testing
- One or more Device Interoperability Testing procedures. These test procedures are operating system specific – a device may be submitted for testing with multiple operating systems; passing any interoperability test procedure is sufficient for this portion of compliance testing.

A.2.6 Low Speed Peripherals

- B.4 Inrush Current Testing
- B.6 Upstream Signal Quality Testing
- C. Device Framework Testing
- H. Back-voltage Testing
- One or more Device Interoperability Testing procedures. These test procedures are operating system specific – a device may be submitted for testing with multiple operating systems; passing any interoperability test procedure is sufficient for this portion of compliance testing.

A.3 Contacting the USB-IF

Following is a list of email addresses into the USB-IF organization. Since the USB-IF is a collaborative effort, these addresses are monitored by key individuals of several member companies.

If you are not sure which email address to use, or the information is confidential, send to Admin@usb.org and they will forward your email to the appropriate person or group.

Admin@usb.org	Primary contact address of the USB-IF. Handles all administrative, workshop and tradeshow logistics, registration, licensing, USB-IF website, logo administration and legal issues.
TechSup@usb.org	Technical support on test procedures, specification clarifications, "how to" and general help.
TechAdmin@usb.org	Certification issues, workshop questions, reporting bugs in USB-IF tools and documentation.
CRB@usb.org	Waiver requests only

Microchip Ex. 1021, p. 9
Microchip v. Aptiv
IPR2024-00494

B Electrical Tests

B.1 Required Equipment and Equipment Setup

The following items are used.

Note that the equipment listed, the test procedure steps, and the actual list of required tests is expected to change. Please refer to http://www.usb.org/developers/complian.html on the USB-IF, Inc. web site for the latest version of this document.

B.1.1 'Special' items (test fixtures) to be acquired* through Tektronix or Agilent.

item	description/model	qty
100mA Load Board*		1
500mA Load Board*		1
Droop Test Board*		1
SQiDD Board*	Signal Quality, Inrush and Droop/Drop test jig	1
5V power supplys (for HUBs)		6**
FS Hub (Self-powered)	Belkin F5U100 / F5U101	1
HS Hub (Self-powered)	APC 19500SG-1G or IO Gear Model GUH-224 'Gold' or any certified high-speed hub	6**

*At the time of the latest update of this document these test fixtures were available through Tektronix and Agilent.

** a 6th unit is recommended as a spare

Microchip Ex. 1021, p. 10
Microchip v. Aptiv
IPR2024-00494

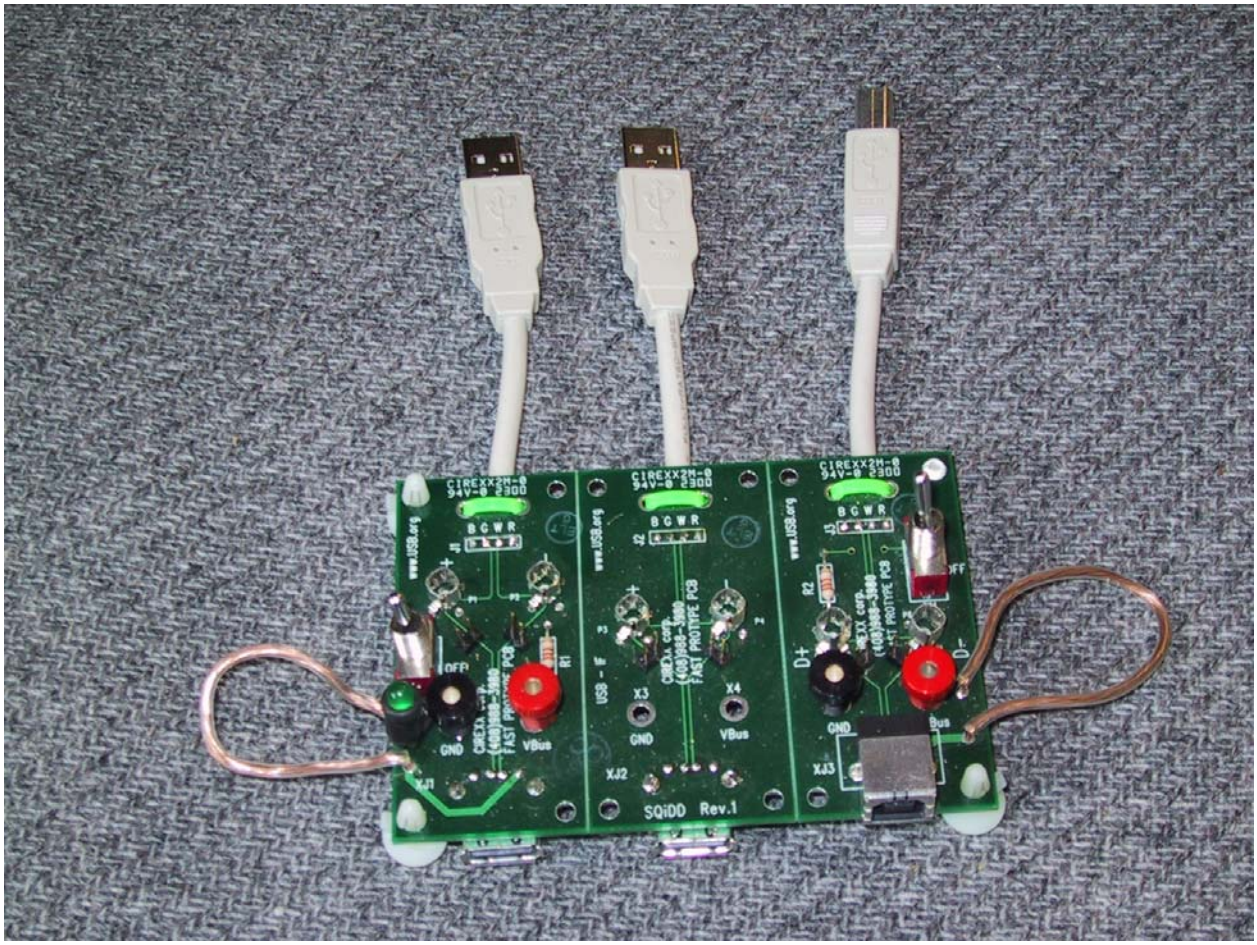

Figure B-1: SQiDD Board

The Signal Quality Droop Drop or SQiDD board is divided into three sections; Section 1 has AA signal and power break monitor points together with an Inrush Current switch and V_{BUS} current monitor loop. Section 2 only has AA signal and power break monitor points. Section 3 has BB signal and power break monitor points together with an Inrush Current switch and V_{BUS} current monitor loop.

All three sections of the SQiDD board are used for signal quality testing and support multiple Oscilloscope probe types. The Tektronix P6204/5 Oscilloscope probe types are obsolete. These probes are only suitable for low- and full-speed signal quality testing. A header for a newer type probe is used as the default Signal Quality Probe point. This header supports new type probes like the Tektronix P6243 and P6245 probes which offer limited ability to probe high-speed (USB 2.0) signaling environments.

Two sections, 1- AA and 3- BB, of the SQiDD board are also used for Inrush and Power Testing with wire loops that are used with Clamp on type current probes. Added power switch functions support Inrush testing on these two sections. A three-position switch has a normal powered mode as its default which passes V_{BUS} straight through. Switch position 2 shorts out and discharges the V_{BUS} and Ground rails of the Device Under Test (DUT) or Hub Under Test (HUT) through a 1 KΩ resistor. Switch position 3 opens the V_{BUS} line and allows for hooking up the DUT or HUT and current probe.

Microchip Ex. 1021, p. 11
Microchip v. Aptiv
IPR2024-00494

B.1.2 standard test equipment

item	description/model	qty
oscilloscope	Tektronix TDS 684C or 784C *	1
TDS Probes	P6245 voltage probes (or equivalent)**	3
Current Probe	TCP202 current probe	1
multimeter	Keithley 2000 Multimeter	1
USB Host System with GPIB board/controller	Hardware Configuration: 815EEA2 motherboard, Pentium III 700 mHz, 256meg ram, 40g HD, CD (or CD/RW), FD IOGear (or ATEN) USB 2.0 PCI Card (5-port) Model GIC250U National Instruments I-488.2 GPIB support for connection to 'oscilloscope'	1

* supported by available GPIB data aquisition scripts – other models may require extensive script modifications to properly interface with the GPIB DAQ application.
**Do not use P6249 voltage probes since they do not have adequate dynamic voltage range.

B.1.3 standard/available USB products

item	description/model	qty
Isoch Device	any listed on USB-IF Full-speed PC Camera	1
mouse	any listed on USB-IF mouse	8
one meter USB cables	any listed on USB-IF Cables and Connectors Integrators List	3
five meter USB cables	any listed on USB-IF Cables and Connectors Integrators List	6

B.1.4 General Equipment Setup

B.1.4.1 Oscilloscope

The following section defines the test equipment setup and operational requirements. Refer to the equipment list items for setting up equipment. Follow the step-by-step instructions to set up the oscilloscope setups for Signal Quality testing.

Scopes from various manufacturers are capable of the required test operation. However, the currently available MatLab scripts support the Tektronix model TDS 684C and 784C oscilloscope. Using other models may require extensive script modifications.

Each setup command that starts with one of the main buttons on the scope's front panel is marked with a bullet, with subsequent selections being made on the horizontal and vertical rows of buttons next to the scope's display. If multiple selections in a row are made from one main menu, the subsequent selections are indented below the bulleted one according to how far down they are in the submenus. For some selections, you'll need to scroll through the menu at the right side of the scope's display to find them.

Depending on the model of TDS, the exact horizontal division settings, record lengths, and trigger positions may vary. If a wrong initialization step was taken, the test operator can start over from the last point at which a setup was saved by recalling that setup: setup→recall setup→setup *n*.

Microchip Ex. 1021, p. 12
Microchip v. Aptiv
IPR2024-00494

These setup steps may need some customization for a given measurement:

- Depending on the amount of data returned or sent on the bus, the signal integrity setups may need adjustments to trigger positioning, record length, and the horizontal division size. Try to keep the horizontal division size @ 50 points/division close to 200ns/division for LS signals and 25 or 50ns/division for FS.
- The inrush setups will need a lot of adjustment, as inrush currents manifest a wide variety of durations and peak currents. Expect to use vertical division settings anywhere from 100mA/division to 5A/division and timebases between 500ns/div and 20µs/division. If you need a timebase longer than 20µs/division, it's usually best to max out the scope's record length before upping the timebase.

The oscilloscope is used as the front-end capture of data that is transferred to the PC to be further analyzed, documented and saved in soft data format. This process uses the National Instruments GPIB board to transfer instrumentation data from the oscilloscope to the PC. Data point analysis is done with MatLab analysis software using specific MatLab scripts. The GPIB board and its associated software is installed in the PC.

All of the setups split the oscilloscope's trace display into two areas. The upper one is a zoom window that shows the contents of the box shown in the lower widow. The lower window shows the entire contents of the oscilloscope's records (except for 15k point records, where it only shows two thirds of the record at any given time for reasons known only to Tektronix). This setup is handy for looking at any individual part of the captured waveform. You can move the box around with the horizontal and vertical position knobs as long as the upper graticule is active (it's selected with zoom→graticule→upper), though it's usually more convenient to do one's zooming in MatLab. If you need to work with the lower graticule, select it (zoom→graticule→lower), and do whatever it is that needs to be done.

In addition, all of the setups use gated, paired cursors. The paired bit means the scope puts markers on the currently selected channel where it crosses the cursors and gives you X and Y deltas between the markers. This comes in handy occasionally. The gated bit means that the measurements the oscilloscope (rise/fall time, mean, max, *etc.*) makes are done on the part of the record between the two cursors. This lets you gate out a particular part of the record that's interesting and take measurements for just that part of the record, rather than having the scope indiscriminately apply the measurements to the entire record. Generally, though, it's faster and more convenient to look at the eye diagram in MatLab or zoom in on MatLab's plot of the scope data.

B.1.4.1.1 Tips on Using the Scope

- Pressing shift activates *Coarse Knobs*, which increases the effect of anything you twirl. This is really handy for moving cursors and the zoom window around. Pressing shift again will turn coarse knobs off.
- The "I" shaped bar above the upper graticule represents the entire contents of the oscilloscope's records. The brackets indicate the area of the record is displayed in the lower graticule. The T marks the trigger point's position in the record, and the dashed and solid lines mark the positions of the inactive and selected cursors, respectively.

B.1.4.1.2 Initial Scope Setup

Note: step 2 requires a minimum one hour for scope warm up before completing the initial scope setup procedure.

1. Refer to the instrument's user guide for initial probe compensation settings.

Microchip Ex. 1021, p. 13
Microchip v. Aptiv
IPR2024-00494

2. Allow one-hour warm up of Scope

3. Run Signal Path Compensation (SPC). SPC corrects for DC inaccuracies caused by temperature variations and/or long-term drift. SPC can be any time after the scope is warmed up and should be run whenever the scope's ambient temperature has changed by more than 5 degrees C.
(Ensure that the scope has been powered on for an hour prior to running signal path compensation. Running signal path compensation before the scope is warmed up will result in erroneous test results.)

   - ensure probes are disconnected
   - utility→system→cal→OK compensate signal paths

Signal path compensation will take about 10 minutes.

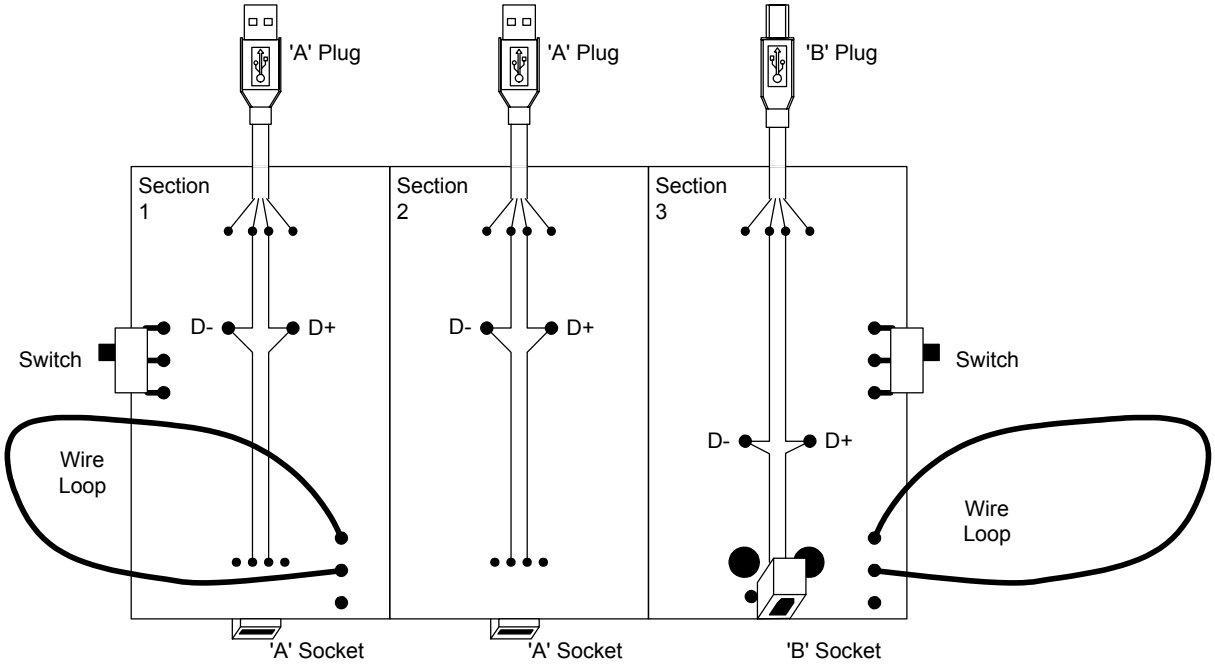

Figure B-2: SQiDD Board

4. Attach oscilloscope probes to the SQiDD Board as shown:

   - ch 1: voltage probe→SQiDD Board section 1 or section 3 D-
   - ch 2: voltage probe→SQiDD Board section 1 or section 3 D+
   - ch 3: voltage probe→ SQiDD Board section 2 (D- for LS signals, D+ for FS signals)
   - ch 4: current probe→SQiDD Board wire loop on section 1 or section 3

5. Reset scope to factory defaults

   - setup→recall factory setup→OK confirm factory init

   Note: The following setups are done in sequential order one time and saved for one-button recall during actual testing. These setups can also be saved to Floppy Disk on various scopes for later use.

Microchip Ex. 1021, p. 14
Microchip v. Aptiv
IPR2024-00494

6. Set GPIB address

- utility→system→I/O→configure talk./listen→talk/listen address→1

B.1.4.1.3 Upstream LS Signal Integrity Setup

1. Define LS upstream trigger

Note that the setup described in the preceding section is a prerequisite for this setup.

- probes connected to scope channels 1 through 4 as described in section B.1.4.1.2 step 2
- acquire menu→repetitive signal→off
  (this is not an option on all scopes)
- trigger menu→type→logic

  class→pattern

  define inputs → ch1 low

  ch2 low

  ch3 high

  ch4 don't care

  define logic→AND

  trigger when→true for more than 100ns

  set thresholds → ch1 .8V

  ch2 .8V

  ch3 2.7V

  mode and hold off→normal

2. Setup LS upstream display

- horizontal menu

  trigger position→75%

  record length→fit to screen on

  record length→5000 points (in 10 divs)

  horizontal scale→main scale @ 50pts/div→200ns

- zoom→mode→preview
- vertical menu→ch1→1V/div
- vertical menu→vertical position→-1.5div
- vertical menu→ch2→1V/div

  vertical position→-1.5div

3. Setup rise/fall time measurements

Microchip Ex. 1021, p. 15
Microchip v. Aptiv
IPR2024-00494

- ch1
- measure→select measurement for ch1→rise time

  fall time

- ch2

  rise time

  fall time

  gating→gate with v bar cursors

- cursor→function→paired

4. Save LS upstream setup

   - setup→save current setup→to setup 1

B.1.4.1.4 Upstream FS Signal Integrity Setup

Note that the setup described in the preceding section is a prerequisite for this setup.

1. setup FS upstream display

   - horizontal menu→trigger position→68%

     horizontal scale→main scale @ 50pts/div→20ns

2. save FS upstream setup

   - setup→save current setup→to setup 2

B.1.4.1.5 Downstream LS Setup

Note that the setup described in the preceding section is a prerequisite for this setup.

Microchip Ex. 1021, p. 16
Microchip v. Aptiv
IPR2024-00494

1. Setup downstream LS trigger

   - trigger menu→type→edge

     source→ch2

     level→1.65V

   - horizontal menu→trigger position→6%

     record length→2500 points (in 10 divs)

     horizontal scale→main scale @ 50pts/div→500ns

2. Save downstream LS setup

   - setup→save current setup→to setup 3
     Note: Downstream setups can use positive or negative edges.

B.1.4.1.6 Downstream FS Setup

1. Setup downstream FS trigger

   - trigger menu→type→edge

     source→ch2

     level→1.65V

   - horizontal menu→trigger position→40%

     record length→5000 points (in 10 divs)

   - horizontal scale→main scale @ 50pts/div→40ns
2. Save downstream FS setup

   - setup→save current setup→to setup 4

B.1.4.1.7 Inrush Testing Setup

1. Setup for Inrush current testing

   - ch1 waveform off
   - ch2 waveform off
   - press ch4 button (turn on channel 4 waveform)
   - vertical menu → position → -3div
   - horizontal menu → trigger position → 10% record length → 15000points
   - record length→15000 points (in 15 divs)

Microchip Ex. 1021, p. 17
Microchip v. Aptiv
IPR2024-00494

- horizontal scale → main scale → 50pts/div →10ms
- trigger menu → source → ch 4
- level → 10mV
- measure → select measurement for ch4 → max

If using a P6302 current probe

- verify that the vertical scale shows A /div or mA/div
- vertical menu → fine scale → 10mA/div
- set current probe to 1A/div

Save inrush current setup:

- setup → save current setup → to setup 5

B.1.4.2 Test System Software Setup

B.1.4.2.1 Prepare the Host System

The host software required is Windows 2000 Professional or Windows XP Professional, USBHSET (USB-IF High Speed Electrical Test Software) and MatLab analysis software. Install Windows 2000 Professional or Windows XP Professional

Use the default installation options: select 'typical' system configuration, install 'most common components', and select location 'US'.

Install any required platform-specific drivers – all devices should be 'working properly'; there should be no 'unknown devices' shown in the Windows 2000 Device Manager.

B.1.4.2.2 Install and Configure MatLab and USBHSET

The latest version of USBHSET is available on the USB-IF website at http://www.usb.org/developers/tools.html. Download and install the latest version. Follow the readme first instructions provided by the installer to complete the setup and interface with Matlab.

Microchip Ex. 1021, p. 18
Microchip v. Aptiv
IPR2024-00494

B.2 Host or Hub Power Provider (Droop/Drop) Testing

B.2.1 Equipment Used

Note that the equipment listed, the test procedure steps, and the actual list of required tests is expected to change. Please refer to http://www.usb.org/developers/complian.html on the USB-IF, Inc. web site for the latest version of this document.

qty	item
1	USB Host System with GPIB board
1	USBHSET and Matlab
1	Oscilloscope
1	Multimeter
1	100mA Load Board (for testing bus powered hubs only)
1*	500mA Load Board
1	Droop Test Board
1	one meter USB cables

*One load board per user accessible port

B.2.2 Drop Testing

B.2.2.1 Equipment Setup

Setup Voltmeter to measure voltage Drop across each load board.

Microchip Ex. 1021, p. 19
Microchip v. Aptiv
IPR2024-00494

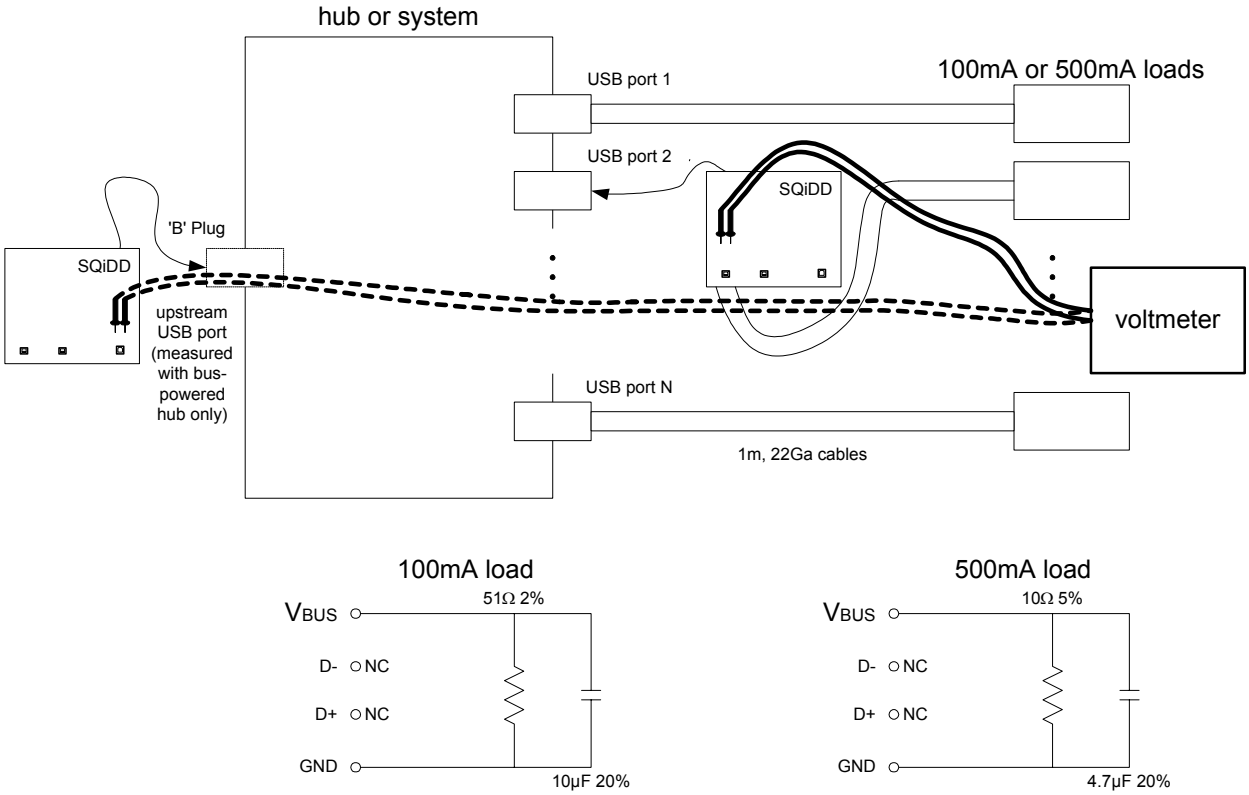

Figure B-3: Drop Test Setup

B.2.2.2 Test Steps

Note: Hubs that operate in both self-powered and bus-powered modes shall be tested in both modes.

B.2.2.2.1 Self-Powered Hubs

1. Measure V_{BUS} on downstream port #1 and record as V_{NL}.

2. Attach 500mA loads into all ports and record V_{BUS} voltage on port #1 as V_{LOADED}. The measured voltage should be between 4.75 and 5.25V on all ports.

3. Repeat as necessary for all remaining downstream ports on HUB.

$$V_{DROP} \equiv V_{NL} - V_{LOADED}$$

Where

$V_{NL} \equiv V_{BUS}$ at a downstream USB connector with USB ports open circuited (no load)

And

$V_{LOADED} \equiv V_{BUS}$ at a downstream USB connector with 100 or 500mA loads, as appropriate, on all USB ports

Microchip Ex. 1021, p. 20
Microchip v. Aptiv
IPR2024-00494

B.2.2.2.2 Bus-Powered Hubs

1. Measure V_{BUS} on downstream port #1 and record as V_{NL}.

2. Attach 100mA loads into all ports and record V_{BUS} voltage on port #1 as V_{LOADED}. Voltage measured should be greater than 4.40 V.

3. Repeat as necessary for all remaining downstream ports on HUB.

$$V_{DROP} \equiv V_{UPSTREAM} - V_{DOWNSTREAM}$$

$V_{UPSTREAM} \equiv V_{BUS}$ at hub's upstream connection

$V_{DOWNSTREAM} \equiv V_{BUS}$ at one of the hub's downstream ports

B.2.2.3 Test Criteria

Section 7.2.2 of the USB 1.1 specification requires powered USB ports to provide a V_{BUS} between 4.75 and 5.25V while bus-powered hubs must maintain V_{BUS} at 4.40V or greater. Drop testing evaluates V_{BUS} under both no-load and full-load (100 or 500mA, as appropriate) conditions.

Self-powered hubs, systems, and laptops must provide a voltage between 4.75 and 5.25V under all load conditions.

Bus-powered hubs must have a $V_{DROP} \leq 100mV$ between their upstream and downstream ports when 100mA loads are present on all downstream ports. This ensures that they will supply 4.4V to a downstream device, given a 4.75V upstream supply, minus 100mV drop through the hub and 250 mV drop through the upstream cable. If the hub does not use a captive cable (the USB cable has a B plug), the voltage drop is the difference between the measured upstream voltage level and the lowest measured downstream value. Bus-powered hubs with captive cables (the USB cable does not have a B plug) must have $V_{DROP} \leq 350mV$ between the upstream connector and their downstream ports; this includes the drop through the cable.

Special consideration will be made for laptops which are unable to provide compliant voltages with 500mA loads while running off of battery power, provided they can meet the required voltages with one or more of the loads reduced to 100mA. However, the end user may experience confusion and difficulty in this situation, unless the operating system or laptop vendor provide a warning message window alerting the user that a high power device can not be used under battery power.

Microchip Ex. 1021, p. 21
Microchip v. Aptiv
IPR2024-00494

B.2.3 Droop Testing

B.2.3.1 Equipment Setup

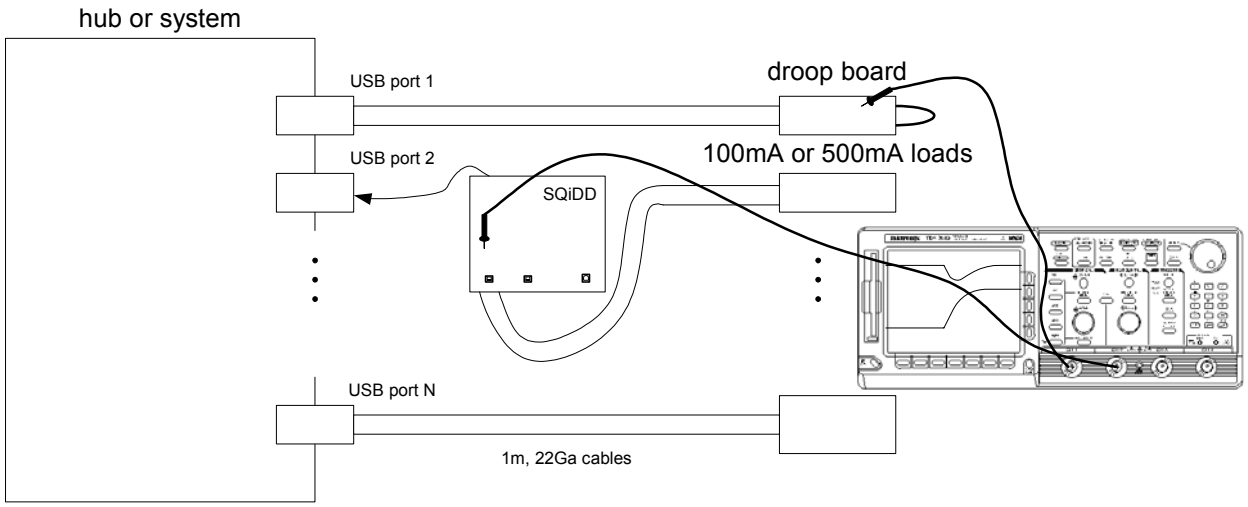

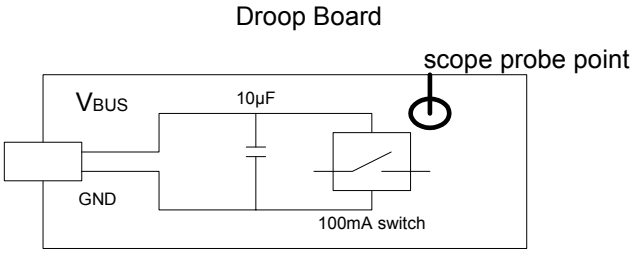

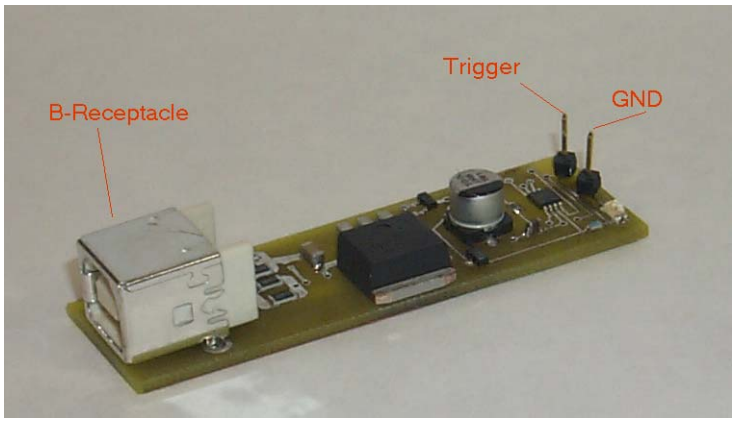

USBIF Droop Test Fixture

Figure B-4: Droop Test Setup & Fixture

Follow the Step by step instructions to set up the oscilloscope setups for Signal Quality testing. Currently this testing uses a Tektronix oscilloscope preferably a model TDS 684C or 784C.

Microchip Ex. 1021, p. 22
Microchip v. Aptiv
IPR2024-00494

B.2.3.2 Test Steps

1. Setup Oscilloscope Channel 1 to 1V/div and Channel 2 to 2V/div

   Timebase set for 25 us/div

   Set the Oscilloscope Voltage Reference to V_{BUS} level less 330mV

   acquire menu → average [16]

2. Connect the Oscilloscope as follows:

   Channel 1 is connected to the Droop Board trigger to monitor the switch pulse

   Channel 2 is connected to each V_{BUS} line on load board port(s) adjacent to the port that has the Droop fixture attached. (Note: Do not measure the Vbus droop on the port that has the Droop Fixture attached to it. This will result in false failures since this test is intended to measure the droop on adjacent ports only – simulate a hot plug event)

3. Observe Droop voltage on each port of the HUB

   For all devices:

   $V_{DROOP} \equiv$ the difference between V_{BUS} when the 100mA switch is open and the lowest observed V_{BUS} after the switch closes

Microchip Ex. 1021, p. 23
Microchip v. Aptiv
IPR2024-00494

B.2.3.3 Test Criteria

Section 7.2.4.1 of the USB 1.1 specification allows a maximum droop of 330mV in the V_{BUS} supplied to a USB port when a device is hot plugged into another port. Droop testing evaluates worst-case droop by applying a 100mA load which switches on and off to one of the available ports when all other ports are supplying the maximum load possible. All V_{BUS} measurements are relative to local ground.

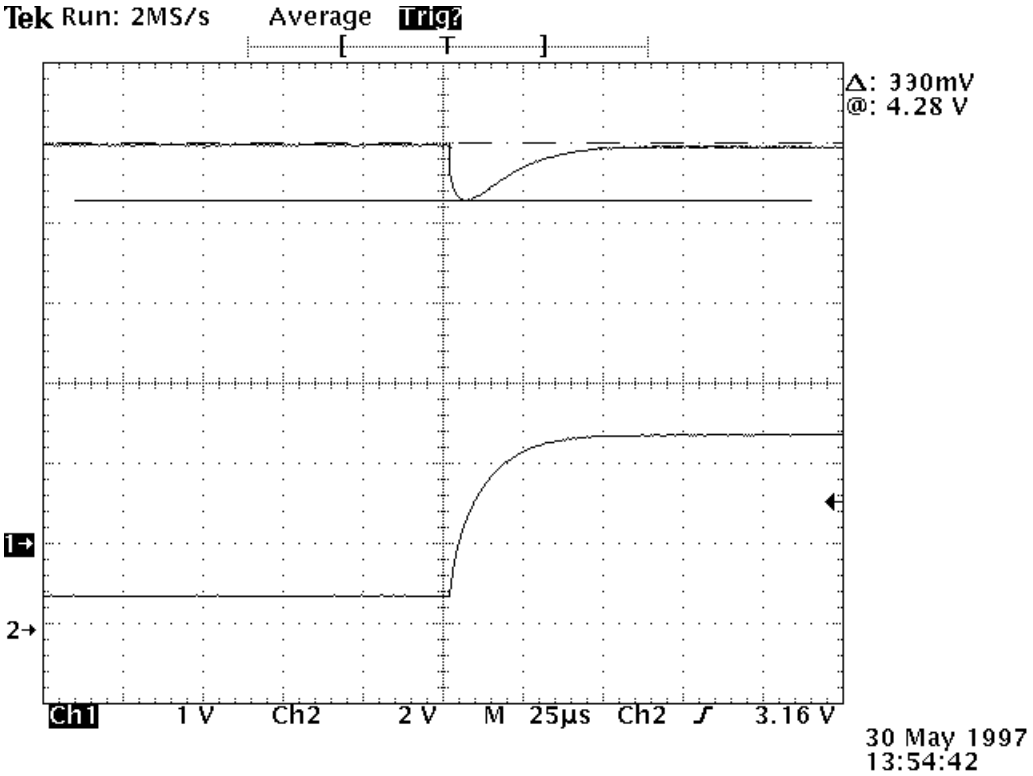

Figure B-5: Droop Measurement Example

The USB-IF will test—at the connectors—the sample provided for compliance to these requirements. It is the responsibility of the vendor to ensure all units produced satisfy the requirements of this test.

Microchip Ex. 1021, p. 24
Microchip v. Aptiv
IPR2024-00494

B.2.3.4 Test Results

	Bus-powered Hub	Self-powered Hub/System	Laptop	
			battery-powered	self-powered
load type	**100mA**	**500mA**	**___100 ___ 500mA**	**500mA**
V_{NL}				
V_{LOADED}				
$V_{UPSTREAM}$				
$V_{DOWNSTREAM}$				
V_{DROP}				
V_{DROOP}	Less than 330mV			

B.2.4 Reporting Results

1. No Load Voltage: passing values are from 4.75 to 5.25 V
2. Loaded Voltage: passing values are from 4.75 to 5.25 V
3. Upstream Voltage: passing values are from 4.40 to 5.25 V
4. Downstream Voltage: passing values are from 4.75 to 5.25 V
5. Voltage Drop:
6. Droop Voltage:

Microchip Ex. 1021, p. 25
Microchip v. Aptiv
IPR2024-00494

B.3 Host Downstream Signal Quality Testing

B.3.1 Equipment Used

Note that the equipment listed, the test procedure steps, and the actual list of required tests is expected to change. Please refer to http://www.usb.org/developers/docs on the USB-IF, Inc. web site for the latest version of this document.

qty	item
1	USB Host System with GPIB support
1	Matlab + USB analysis scripts (or approved Agilent/Tektronix analysis package)
1	oscilloscope
2	TDS Probes
6	five meter USB cable
1	one meter USB cable
1	SQiDD board
1	USB-IF certified Full-speed PC Camera
1	USB-IF certified mouse
4	USB-IF certified high speed hubs (see section B.1.1 for recommendation)
1	USB-IF certified full-speed hub (see section B.1.1 for recommendation)
1	USB-IF certified EHCI host controller

B.3.2 Equipment Setup for testing Downstream Traffic

The best method to capture and analyze full-speed downstream signal (DS SQ) quality is to trigger on either SOF packets or use a falling edge trigger on D+.

For LS and FS DS SQ, HSET is not required to generate bus traffic. Just connect a known good LS or FS device, preferably one of the USB-IF sanctioned gold tree devices, to the port under test and capture the LS or FS SOF to perform the eye pattern analysis. The FS SQ test requires a known good 5 meter cable between the known good FS device and the port under test.

The best method to capture and analyze low-speed downstream signal quality is to capture both a keep-alive (low speed EOP) and a packet. The root hub is required to either generate a keep-alive or send low speed traffic once per frame whenever a low speed device is directly attached. To capture downstream traffic with low-speed devices a trigger on D- or an SE0 pattern trigger is used.

Two channels of the oscilloscope are used.

B.3.3 Signal Integrity Test - Downstream Signal test

All root hubs (found on all host add-in cards, motherboards, and systems) produce downstream signals that can be tested.

Microchip Ex. 1021, p. 26
Microchip v. Aptiv
IPR2024-00494

B.3.3.1 Low-speed Downstream Signal Quality Test

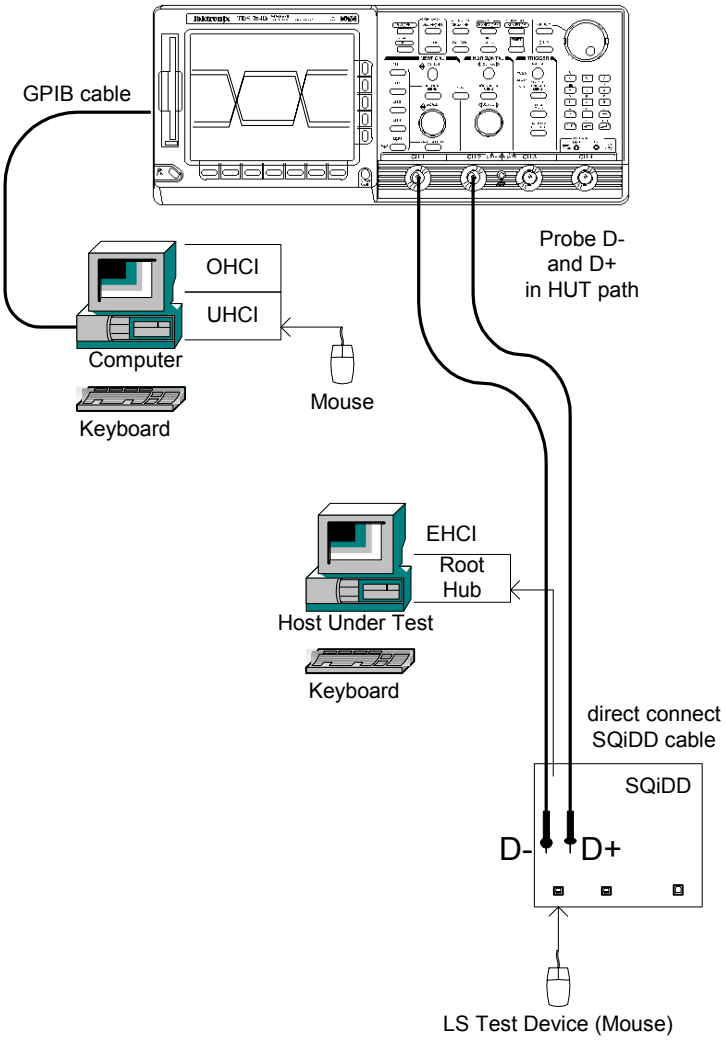

Figure B-6: Host LS Downstream Signal Quality Test

1. verify the scope is warmed up (running at least 1 hour)
   ensure signal path compensation has been run on the scope recently (within 4 hours)

2. Start MatLab

3. Start GPIB DAQ

4. Get zeroes
   (Scope must be triggering in order to get zeros (typically ranges between 50-150mV) and DUT must be unplugged)

5. On Oscilloscope recall Setup for Low Speed downstream signal (Setup 3)

Microchip Ex. 1021, p. 27
Microchip v. Aptiv
IPR2024-00494

6. Connect scope channel 1 to D- and scope channel 2 to D+ on the SQiDD board section 1.

7. Connect SQiDD section 1 'A' plug to a down stream port on the Host Under Test (HUT).

8. Plug low speed device to 'A' socket on SQiDD board section 1

   Verify that SOFs are being visible on the scope. The mouse should function on they port under test normally.

9. Check scope to make sure waveform has been captured. The scope cursors should bracket the host downstream packet/SOF. In general, this will be the first packet on the left. The left-most cursor should be placed ~1 LS bit time to the left of the first sync bit and the right-most cursor should be placed ~1 LS bit time to the right of the EOP rising edge. This will include idle bus voltage levels (D- at 3.3Volts nominal).

10. GPIB DAQ auto --> USB LS near and far end signals --> Tier 6

11. Save it as <USB-IF SN>dl.tsv ; example: usbd123dl

12. If needed give the results in floppy.

Microchip Ex. 1021, p. 28
Microchip v. Aptiv
IPR2024-00494

B.3.3.2 Full-speed Downstream Signal Quality Test

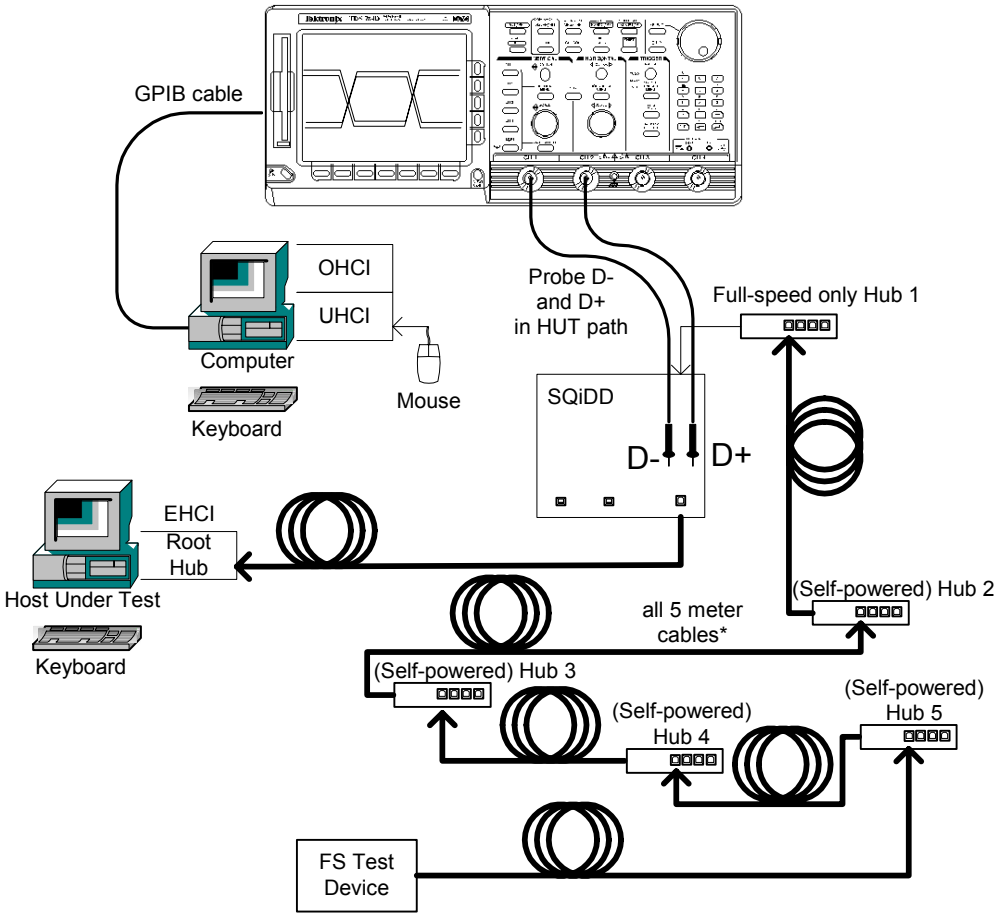

Figure B-7: Host FS Downstream Signal Quality Test

1. verify the scope is warmed up (running at least 1 hour)
   ensure signal path compensation has been run on the scope recently (within 4 hours)

2. Start MatLab

3. Start GPIB DAQ

4. Get zeroes
   Scope must be triggering in order to get zeros (typically ranges between 0-150mV) and DUT must be unplugged.

5. On Oscilloscope recall Setup for Full Speed downstream signal (Setup 4)

6. Connect scope channel 1 to D- and scope channel 2 to D+ on the SQiDD board section 3.

7. Plug 5 meter cable to one of the downstream ports on the Host Under Test (HUT).

Microchip Ex. 1021, p. 29
Microchip v. Aptiv
IPR2024-00494

8. Plug 5 meter cable into 'B' socket on SQiDD board section 3.

9. Plug Full Speed test device into hub 5 and verify that the device reliably enumerates. Verify that FS SOFs are present on the scope. Hub 1 must be a Full-speed only hub to ensure the SOF traffic downstream from the host is running at Full-speed (12Mb/s).

10. Check scope to make sure waveform has been captured. The scope cursors should bracket the host downstream packet/SOF. In general, this will be the first packet on the left. The left-most cursor should be placed ~1 FS bit time to the left of the first sync bit and the right-most cursor should be placed ~1 FS bit time to the right of the EOP rising edge. This will include idle bus voltage levels (D+ at 3.3Volts nominal).

11. GPIB DAQ auto --> USB FS far end signals --> tier 6

12. Save it as <USB-IF SN>df.tsv ; example: usbd123df

13. If needed give the results in floppy.

B.3.4 Reporting Results

1. Eye: pass/fail
2. Cross Over: pass/fail
3. EOP: pass/fail
4. Receivers:
5. Signal Rate: 1.5 Mb/sec or 12 Mb/sec
6. Jitter:

Microchip Ex. 1021, p. 30
Microchip v. Aptiv
IPR2024-00494

B.4 Inrush Current Testing

B.4.1 Equipment Used

Note that the equipment listed, the test procedure steps, and the actual list of required tests is expected to change. Please refer to http://www.usb.org/developers/complian.html on the USB-IF, Inc. web site for the latest version of this document.

qty	Item
1	USB Host System with GPIB board
1	Matlab + USB analysis scripts
1	Oscilloscope
1	TCP202 current probe*
1	one meter USB cable
1	SQiDD Board

* Older Current Probe and Amplifier units are obsolete but can be used. Preferred current probe shown in the setup figures are Tektronix TCP202 that plugs directly into Oscilloscope.

B.4.2 Equipment Setup

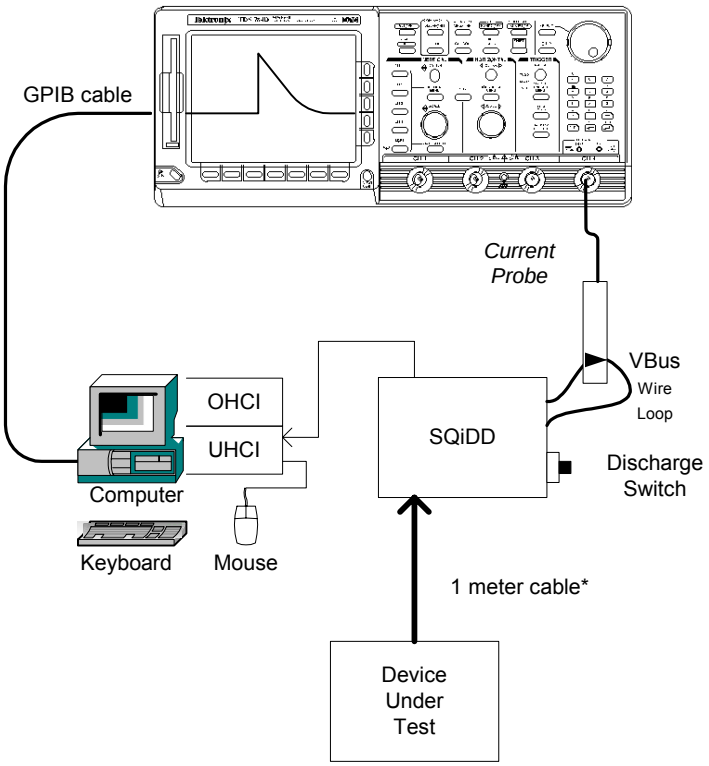

Figure B-8: Device Inrush Current Test Setup

Microchip Ex. 1021, p. 31
Microchip v. Aptiv
IPR2024-00494

B.4.3 Test Steps

1. Start MatLab and GPIB DAQ (if not already running)

2. On Oscilloscope recall Inrush Current Setup (Setup 5)

3. Unplug current probe from the current breakout board. Force trigger and verify reading is very close to zero. If not, adjust current probe zero level using built in zero adjustment knob.

4. Get zeroes

5. Hook up Device Under Test (DUT) to SQiDD Board Section 1 per Figure B-8: Device Inrush Current Test Setup.

6. Plug back the current probe pointing the arrow downstream (in the direction of inrush current flow).

7. Place Switch on SQiDD board to position 3 - shorting V_{BUS} to Gnd on DUT or HUT to discharge device capacitance. Unplug DUT or HUT.

8. Set Trigger level on oscilloscope on channel 4 close to zero

9. Place Switch on SQiDD board to position 1 - Switching V_{BUS} on to DUT or HUT and plug in DUT or HUT to the SQiDD board. Do not use the switch on the fixture to open/close Vbus with the DUT/HUT attached since the switch bounce will cause errors in the actual inrush current measurement.

10. Verify signal fits on the display range of scope. If not, adjust vertical and horiztonal range of scope and go to step 6; otherwise, follow step 3. Inrush current is measured over a one second period immediately following attach.

11. Save it as <USB-IF SN>hpi.tsv ; example: usb123hpi

12. After save, press Enter in the MatLab command prompt window

13. Results are displayed along with a plot

These same steps apply to Bus-powered Device operational mode of Self-powered Devices. (Where device operates with power supply disconnected from its AC power source but is still attached to device.)

Self-powered devices are tested and should not have any measurable inrush current.

The analysis aspect of MatLab is done on the data captured with the Oscilloscope, which is setup to measure instantaneous current for a period of time from 500 mS to 1 Second and results in a Pass or Fail report. This is based on the initial current data points used by a device powering up and is analyzed by MatLab software to measure inrush current curve resulting in a measurable micro-coulomb value. The USB spec allows up to 10uF to be hard started that establishes 50.0uC as the maximum inrush current value.

B.4.4 Reporting Results

Describe the inrush test results.

Microchip Ex. 1021, p. 32
Microchip v. Aptiv
IPR2024-00494

B.5 Hub Downstream Signal Quality Testing

B.5.1 Equipment Used

Note that the equipment listed, the test procedure steps, and the actual list of required tests is expected to change. Please refer to http://www.usb.org/developers/docs on the USB-IF, Inc. web site for the latest version of this document.

qty	Item
1	USB Host System with GPIB board/controller
1	Matlab + USB analysis script
1	Oscilloscope
1	TDS Probes
6	five meter USB cable
1	one meter USB cable
1	SQiDD Board
1	USB-IF certified Full-speed PC Camera
1	USB-IF certified mouse
3	USB-IF certified high speed hub (see section B.1.1 for recommendation)
1	USB-IF certified full-speed hub (see section B.1.1 for recommendation)
1	USB-IF certified EHCI host controller

B.5.2 Equipment Setup for testing Downstream Traffic

The best method to capture and analyze full-speed downstream signal quality is to trigger on SOF packet using a falling edge trigger on D+.

The best method to capture and analyze low-speed downstream signal quality is to capture both a keep-alive (low speed EOP) if present and a SOF packet. Hubs are required to generate keep-alives when there is full speed traffic (typically SOF packets) and pass them on to low speed devices with a chance of integrity problems. To capture downstream traffic with low speed devices a trigger on D- or an SE0 pattern trigger is used.

Two channels of the oscilloscope are used.

Setting up Testing of Downstream Traffic

B.5.3 Signal Integrity Test - Downstream Signal test

- Hubs produce downstream signals that can be tested. **However, eye pattern testing on hub downstream ports for LS and FS signal quality is for informational purposes only.** LS and FS **EOP dribble**, an allowable distortion of the last bit before the Hub EOP, will cause Matlab USB script failures even though the signal quality is within allowable limits. This is a limitation of the software and should not reflect on the overall test result for the hub.

Microchip Ex. 1021, p. 33
Microchip v. Aptiv
IPR2024-00494

B.5.3.1 Low-speed Downstream Signal Quality Test

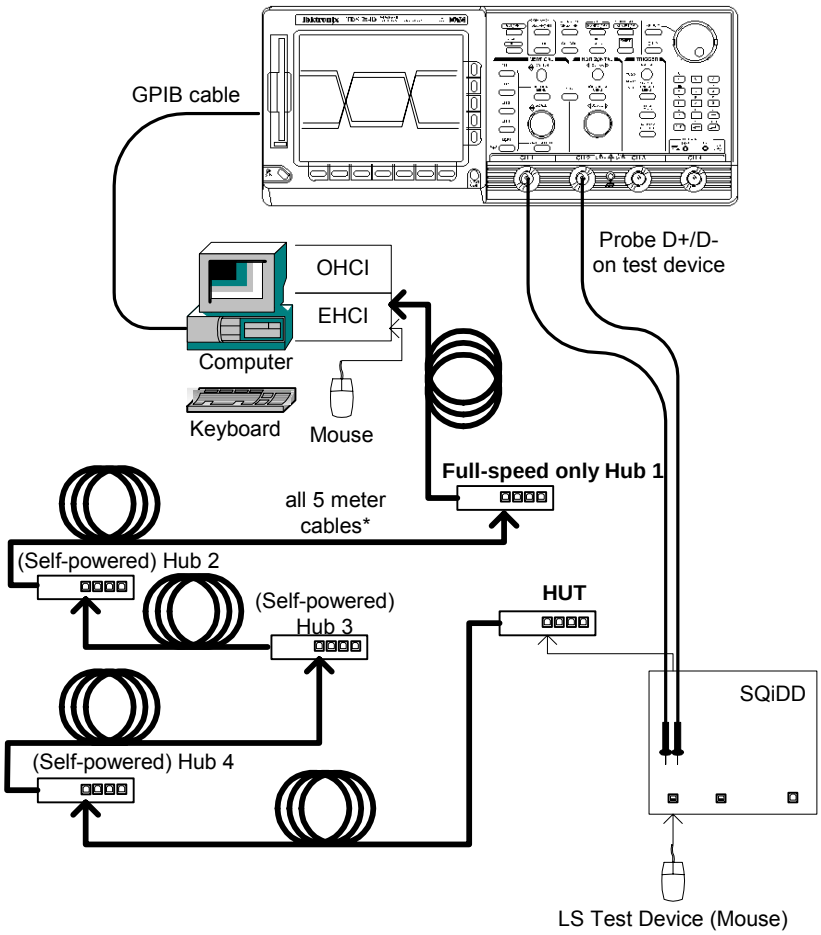

Figure B-9: Hub LS Downstream Signal Quality Test

1. verify the scope is warmed up (running at least 1 hour)
   ensure signal path compensation has been run on the scope recently (within 4 hours)

2. Start MatLab

3. Start GPIB DAQ

4. Get zeroes
   (Scope must be triggering in order to get zeros (typically ranges between 0-150mV) and DUT must be unplugged)

5. On Oscilloscope recall Setup for Low Speed downstream signal (Setup 3)

6. Unplug hub 5 and plug in HUT and enumerate

7. Connect scope channel 1 to D- and scope channel 2 to D+ on the SQiDD board section 1.

8. Connect SQiDD section 1 'A' plug to a down stream port on the HUT.

Microchip Ex. 1021, p. 34
Microchip v. Aptiv
IPR2024-00494

9. Plug low speed device to 'A' socket on SQiDD board section 1

10. Check scope to make sure waveform has been captured. LS keep-alives signals appear as bare SEOs on the bus and may make it necessary to adjust the trigger to capture a LS SOF signal for the eye analysis. The scope cursors should bracket the hub downstream packet/SOF. In general, this will be the first packet on the left. The left-most cursor should be placed ~1 LS bit time to the left of the first sync bit and the right-most cursor should be placed ~1 LS bit time to the right of the EOP rising edge. This will include idle bus voltage levels (D- at 3.3Volts nominal).

11. GPIB DAQ auto --> USB LS near and far end signals --> Tier 6

Note: Due to EOP dribble the scripts will probably report a signal quality failure. **Eye pattern testing on hub downstream ports for LS and FS signal quality is for informational purposes only.**

12. Save it as <USB-IF SN>dl.tsv ; example: usbd123dl

13. If needed give the results in floppy.

B.5.3.2 Full-speed Downstream Signal Quality Test

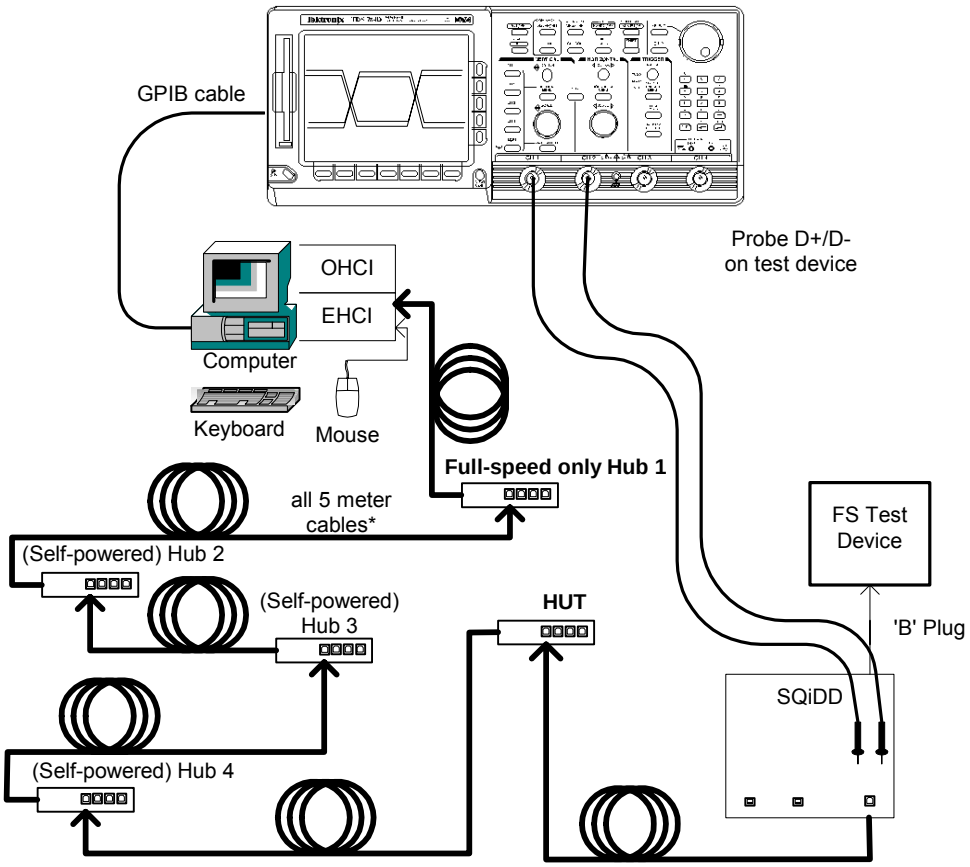

Figure B-10: Hub FS Downstream Signal Quality Test

Microchip Ex. 1021, p. 35
Microchip v. Aptiv
IPR2024-00494

1. Verify the scope is warmed up (running at least 1 hour)
   ensure signal path compensation has been run on the scope recently (within 4 hours)

2. Start MatLab

3. Start GPIB DAQ

4. Get zeroes
   Scope must be triggering in order to get zeros (typically ranges between 50-150mV) and DUT must be unplugged.

5. On Oscilloscope recall Setup for Full Speed downstream signal (Setup 4)

6. Connect scope channel 1 to D- and scope channel 2 to D+ on the SQiDD board section 3.

7. Plug 5 meter cable to one of the downstream ports on the HUT

8. Plug 5 meter cable into 'B' socket on SQiDD board section 3.

9. Enumerate hubs 1 through 4 and the HUT.

10. Plug 'B' plug from SQiDD board into Full Speed test device and verify that device enumerates properly and that SOFs are present on the bus.

11. Check scope to make sure waveform has been captured. The scope cursors should bracket the hub downstream packet/SOF. In general, this will be the first packet on the left. The left-most cursor should be placed ~1 FS bit time to the left of the first sync bit and the right-most cursor should be placed ~1 FS bit time to the right of the EOP rising edge. This will include idle bus voltage levels (D+ at 3.3Volts nominal).

12. GPIB DAQ auto --> USB FS far end signals --> tier 6

13. Save it as <USB-IF SN>df.tsv ; example: usbd123df

14. If needed give the results in floppy.

B.5.4 Reporting Results

1. Eye: pass/fail

2. Cross Over: pass/fail

3. EOP: pass/fail

4. Receivers:

5. Signal Rate: 1.5 Mb/sec or 12 Mb/sec

6. Jitter:

Microchip Ex. 1021, p. 36
Microchip v. Aptiv
IPR2024-00494

B.6 Upstream Signal Quality Testing

B.6.1 Equipment Used

Note that the equipment listed, the test procedure steps, and the actual list of required tests is expected to change. Please refer to http://www.usb.org/developers/complian.html on the USB-IF, Inc. web site for the latest version of this document.

Qty	item
1	USB Host System with GPIB board
1	USBHSET + Matlab
1	oscilloscope
3	TDS Probes
6	five meter USB cable
1	SQiDD Board
1	USB-IF certified Full-speed PC Camera
1	USB-IF certified mouse
4	USB 2.0 certified high speed hubs
1	USB-IF certified EHCI host controller
1	USB-IF Certified FS hub

B.6.2 Equipment Setup

Most signal integrity problems occur at the EOP, with the first transition of a packet a close second. Jitter measurements, on the other hand, are most easily done with an entire packet. The simplest measurement technique, and the one the USB-IF uses, is to capture entire packets with a four channel, real-time digital scope. Depending on the signaling speed and the size of the packet, timebases between 10 and 200ns/division are most useful.

B.6.2.1 Setting up Testing of Upstream Traffic

Placing a full-speed and/or high-speed device downstream of a FS only USB hub forces both to operate in full-speed mode. With the setup as shown in the UST diagram the DUT upstream signaling is easily distinguished from downstream traffic by observing active traffic on the DUT port while the adjacent device is idle, as upstream traffic is not propagated to downstream ports.

For upstream FS signal quality testing on HS capable devices, the DUT must be

B.6.2.2 Triggering on Upstream Traffic

The start of packet pattern can be captured by setting the scope to trigger on lows on the D+ and D- channels of the DUT's bus segment and a high on the adjacent device's bus segment (when both operate at the same speed). A low speed device will have this on D- line and a full speed device the D+ line. The scope is triggered at an EOP on the DUT's data lines with a J on the adjacent device. If the oscilloscope supports time-based pattern triggers, requiring the patterns to be true for 10 or more nanoseconds reduces false triggering.

Microchip Ex. 1021, p. 37
Microchip v. Aptiv
IPR2024-00494

B.6.3 Test Steps

B.6.3.1 Signal Integrity Test - Upstream Signal test (low or full speed)

1. Check the following test setup, Plug in device to tier 5 hub:

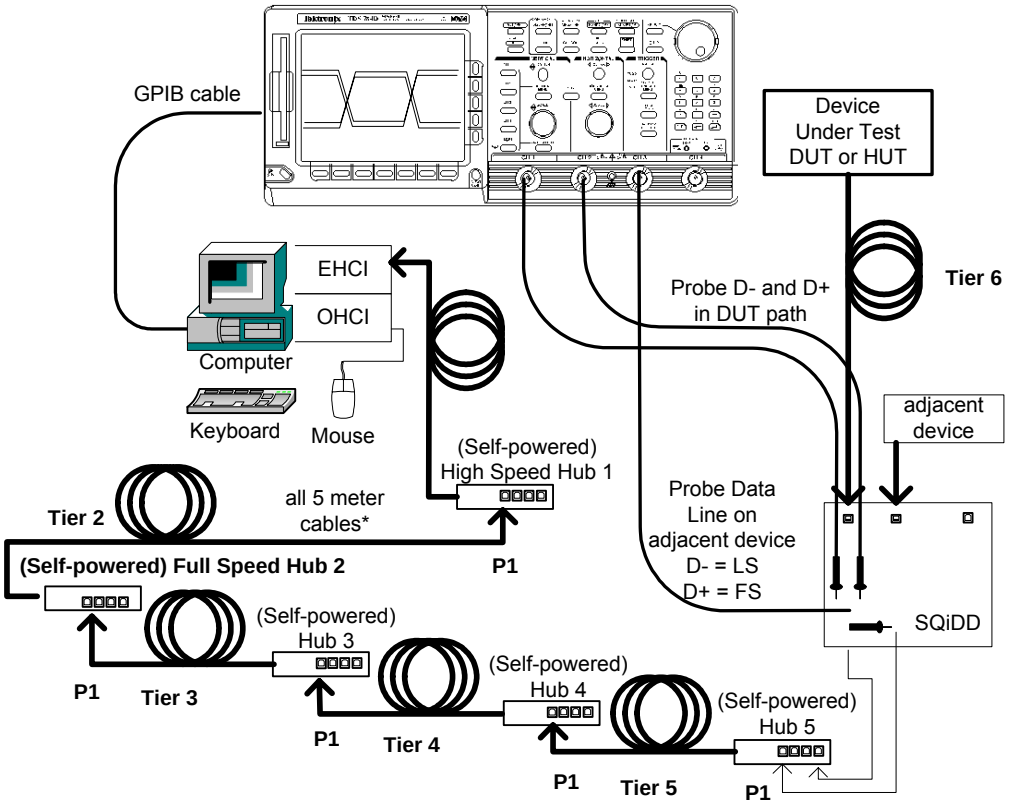

Figure B-11: device and hub upstream signaling test and receiver test schematic

2. Verify the scope is warmed up (running at least 1 hour)
   ensure signal path compensation has been run on the scope recently (within 4 hours)

3. Start MatLab script

4. Start GPIB DAQ

5. Get zeroes
   Scope must be triggering in order to get zeros (typically ranges between 50-150mV) and DUT must be unplugged

6. Attach the HS Hubs to the EHCI controller as shown in Figure B-11. Hub #1 is required to be a High Speed Hub for USBHSET to work properly. Hub #2 is required to be a Full Speed Hub to ensure the DUT/HUT operates at Full Speed when testing a High Speed capable device. Each hub below Hub #1 should be attached to port 1 of the upstream hub, with the exception of the HUT, if testing a hub. This will make it easier to identify the device under test from the enumerated device list provided by HSET. Verify in Device Manager that all hubs enumerate properly.

Microchip Ex. 1021, p. 38
Microchip v. Aptiv
IPR2024-00494

7. On the Oscilloscope recall Setup for Upstream Low Speed or Upstream Full Speed (Setup 1 or Setup 2 respectively)

8. Connect probes:

   Channel 1 D-, Channel 2 D+

   If running Upstream **low speed** test connect Channel 3 to **D-**

   If running Upstream **Full speed** test connect Channel 3 to **D+**

9. Plug in the adjacent device to SQiDD board section 2. Plug the SQiDD board section 2 into port 1 of Hub 5. Verify that the adjacent device enumerates properly. The adjacent (trigger qualifier) device should always be attached to port 1 of the same hub that the DUT or HUT is attached to with the DUT/HUT attached to any of the remaining ports. This makes it easier to identify the DUT/HUT in the enumeration list in HSET.

10. Start HSET.

11. Plug in DUT to SQiDD board section 1 (using a known good 5 meter cable if testing FS SQ). Connect the other side of the SQiDD board to hub 5, any port except port 1.

12. Select device in USBHSET

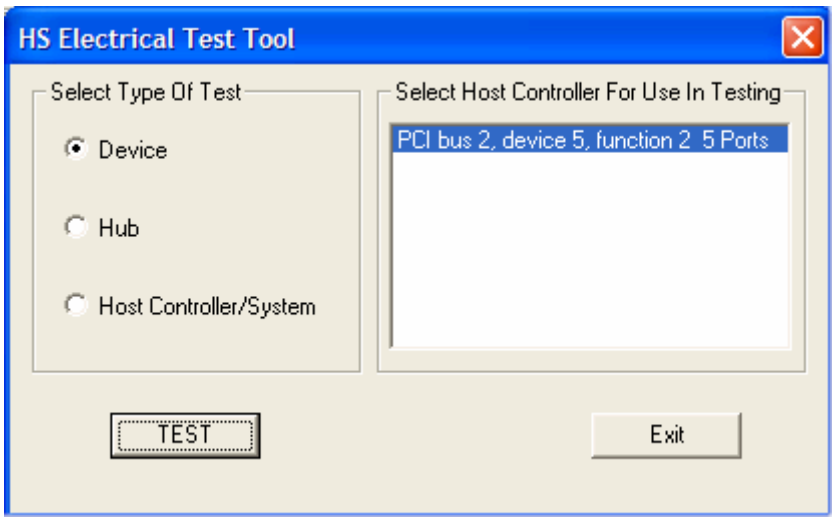

Click Test.

13. When the Device Test screen appears, click the enumerate button. This forces a complete enumeration of the tree. All devices attached to the EHCI host controller should appear in the device enumeration list. If the tree is connected as shown in figure B-11, the DUT/HUT will appear at the bottom of the enumeration list as shown below.

Microchip Ex. 1021, p. 39
Microchip v. Aptiv
IPR2024-00494

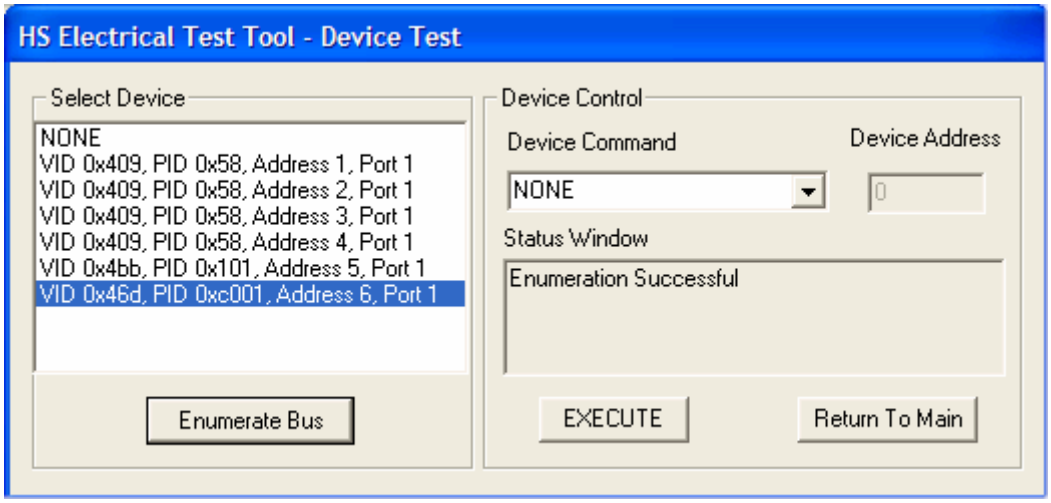

The highlighted device in this example is the device under test. Otherwise, you will need to know the VID/PID of the device under test to determine which device in the list is the DUT/HUT. This is difficult if you are testing a device that has the same VID/PID as another device in the tree itself.

14. Ensure that the DUT/HUB enumerates reliably on tier 6 by clicking Enumerate Bus several times. The Enumerate Bus button will be grayed out during the enumeration sequence. The device should show up each time (as verified by VID/PID). Again, it should be at the bottom of the list if the tree is connected properly.

15. If the device doesn't show up each time you click Enumerate Bus, move the DUT/HUT and the adjacent device up one tier and repeat step 14. After determining the tier that the device reliably enumerates on, proceed. The device must reliably enumerate on Tier 6 to pass. Reliable enumeration on Tier 4 or Tier 5 will result in a pass with waiver, if no other problems are encountered.

16. Select the DUT/HUT in the enumeration list by clicking on it.

17. Select the LOOP DEVICE DESCRIPTOR option in the Device Command pull down menu as shown.

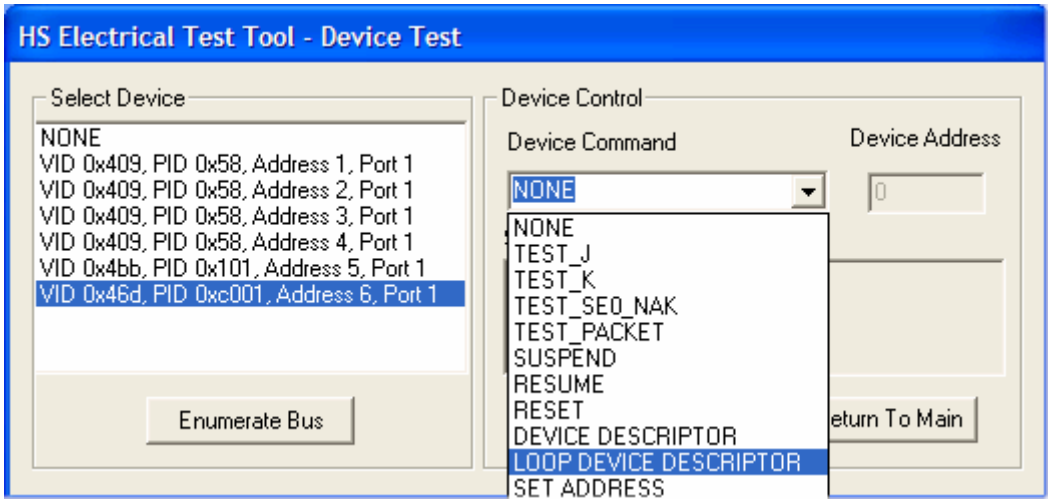

click EXECUTE

Microchip Ex. 1021, p. 40
Microchip v. Aptiv
IPR2024-00494

18. Check the scope to make sure waveform has been captured

19. Use vertical cursor to select an upstream signal packet. The scope cursors should bracket the DUT/HUT upstream packet. The left-most cursor should be placed ~1 bit time to the left of the first sync bit and the right-most cursor should be placed ~1 bit time to the right of the EOP rising edge. This will include idle bus voltage levels (D+ at 3.3Volts nominal).

20. In The GIP DAQ Program, select:
    GPIB DAQ auto → USB (Low or Full Speed) Upstream Signal →tier*
    (*choose the number of the tier where the DUT reliably enumerates as described in steps 14 and 15)

21. Save it as <USB-IF SN>u.tsv ; example: usbd123u

22. After save, press Enter in the MatLab command prompt window

23. Plots are displayed and results are on the MatLab command prompt window

24. If needed save results to floppy

25. To exit the test, click the Return to Main button on the Device Test screen.

Microchip Ex. 1021, p. 41
Microchip v. Aptiv
IPR2024-00494

B.6.4 Reporting Results

1. Eye: pass/fail
2. Cross Over: pass/fail
3. EOP: pass/fail
4. Receivers:
5. Signal Rate: 1.5 Mb/sec or 12 Mb/sec
6. Jitter:

B.6.4.1 Online Directory Structure

All Test Data is saved on the D drive. The parent directory is named with corresponding month and year. Sub-directories are named with the corresponding month and date.

sept1999		(parent directory)
	sept14	(Subdirectory)
	sept15	(Subdirectory)
	sept16	(Subdirectory)

B.6.4.2 Test Data Naming Convention

Signal quality and inrush current testing generates at least one data file, often more. All data files are in tab separated value format (TSV) and can be imported by any number of analysis tools.

These files are:

<USB-IF SN>u.tsv	Upstream Signals (Low or Full Speed)
<USB-IF SN>dl.tsv	Low Speed Downstream Signal (Hubs and Systems)
<USB-IF SN>df.tsv	Full Speed Downstream Signal (Hubs and Systems)
<USB-IF SN>hpi.tsv	Hot Plug Inrush Current

Where <USB-IF SN> is the device or system's USB-IF serial number. During Plugfest testing, upstream signal and hot plug inrush current files are processed by MATLAB analysis scripts. These scripts generate HTML report files, <USB-IF SN>u.html and <USB-IF SN>hpi.html, as well as the .png (Portable Network Graphics, also known as "pings") images used in reports.

Microchip Ex. 1021, p. 42
Microchip v. Aptiv
IPR2024-00494

C Device Framework Testing

C.1 Equipment Used

Note that the equipment listed, the test procedure steps, and the actual list of required tests is expected to change. Please refer to http://www.usb.org/developers/docs on the USB-IF, Inc. web site for the latest version of this document.

item	description/model	qty
USB Host System	Hardware Configuration: Intel D865GLC MATX Motherboard, Intel P4 HT CPU* 512MB DDR333, (2) 120GB UATA/100 HD w/ 8MB cache, 16x DVD-ROM Drive, 1.44MB Floppy Drive, IOGEAR GIC250U USB OHCI Host PCI Adapter	1
average current draw test jig	[test fixture acquired through USB-IF, Inc.]	1
FS Hub (Self-powered)	Belkin F5U100 / F5U101	1
HS Hub (Self-powered)	Belkin F5U221	1
one meter USB cables	any listed on USB-IF Cables and Connectors Integrators List	3

Figure C-1:Average Current Draw Test Jig

Microchip Ex. 1021, p. 43
Microchip v. Aptiv
IPR2024-00494

C.2 Equipment Setup

C.2.1 Prepare the Host System

The host software required is Windows 2000 Professional or Windows XP Professional and the USBCommandVerifier tool. Either restore the saved image of the previously prepared system or follow the steps given in the following sections.

C.2.1.1 Install Windows 2000 Professional or Windows XP Professional

Use the default installation options: select 'typical' system configuration, install 'most common components', and select location 'US'

Install any required platform-specific drivers – all devices should be 'working properly'; there should be no 'unknown devices' shown in the Windows Device Manager.

C.2.1.2 Install USBCV

Run the USBCV.msi installation package from USB-IF, Inc. to install the USBCV-related tools.

C.3 Test Steps

C.3.1 All Devices

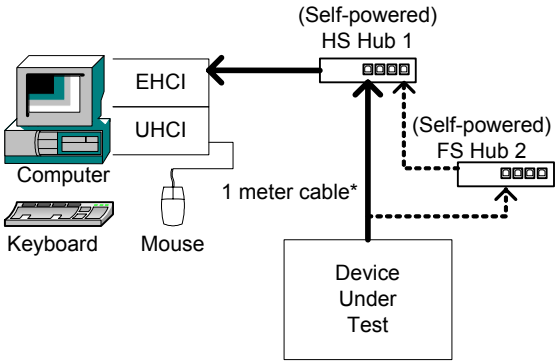

Figure C-2: Device Framework Testing

When testing a device with a removable cable use either the cable supplied by the manufacturer or a one-meter cable.

- **For High Speed Devices, complete test sequence with the DUT connected to the High Speed Hub (HS Hub 1) then repeat the test with the DUT connected to a Full Speed Hub (FS Hub 2) that is connected to HS Hub 1**
- **For Re-Enumerating Devices, complete steps C.3.1 and C.3.2 (Re-Enumerating Devices are devices that enumerate than transfer data to the device firmware memory before final enumeration. Ask the device representative if the device is a Re-Enumeration Device.)**

Microchip Ex. 1021, p. 44
Microchip v. Aptiv
IPR2024-00494

1. Start USBCV

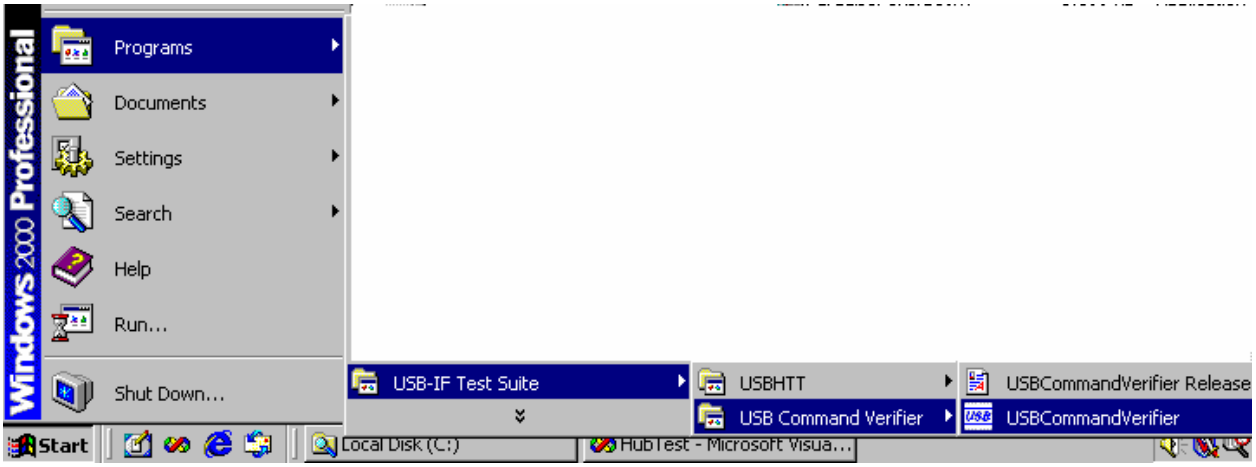

2. Connect the device to port 1 of the USB 2.0 high speed certified hub using either the cable supplied by the manufacturer or a one-meter cable.

3. Run full chapter 9 test by selecting Chapter 9 and compliance mode as shown below.

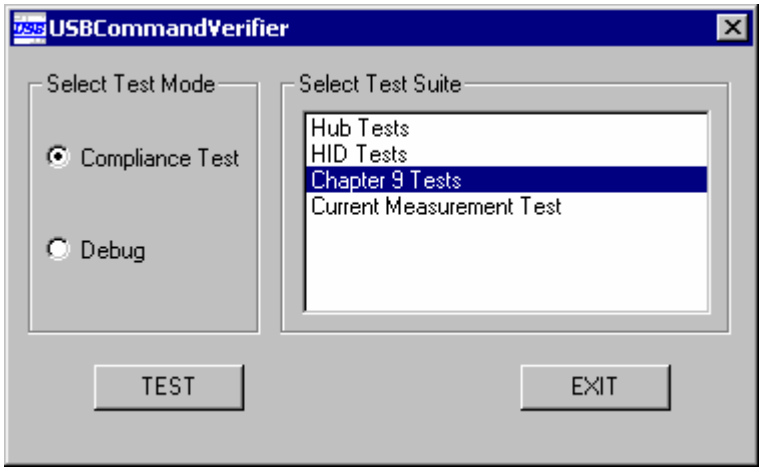

Microchip Ex. 1021, p. 45
Microchip v. Aptiv
IPR2024-00494

4. Select Run Test Suite from the test execution screen.

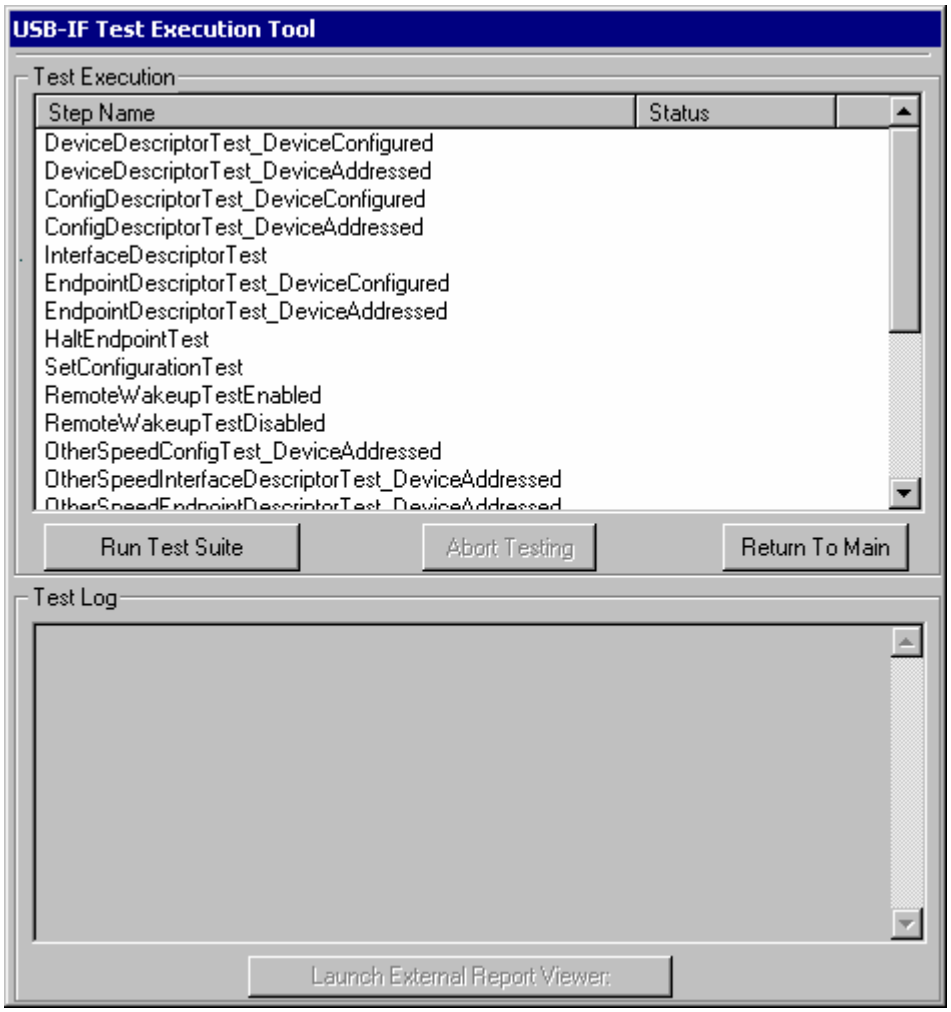

5. USB Command Verifier will show you all devices currently connected. Make sure you chose the correct device to test (not the USB 2.0 hub). An example is shown below:

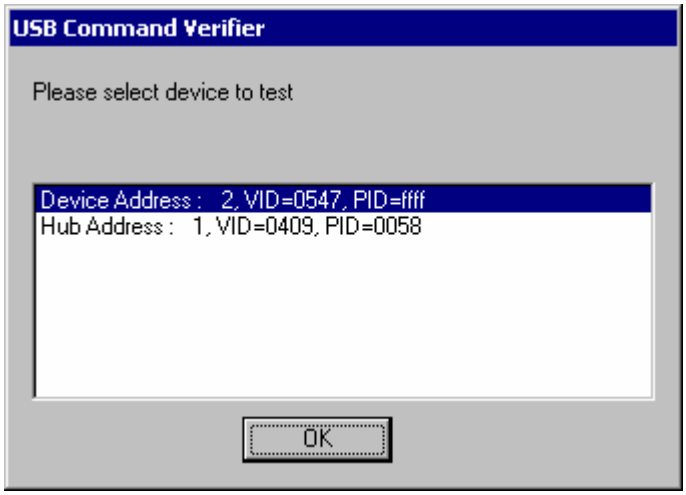

Microchip Ex. 1021, p. 46
Microchip v. Aptiv
IPR2024-00494

6. Follow any prompts provided by the test suite as it runs. The results will be displayed as shown below:

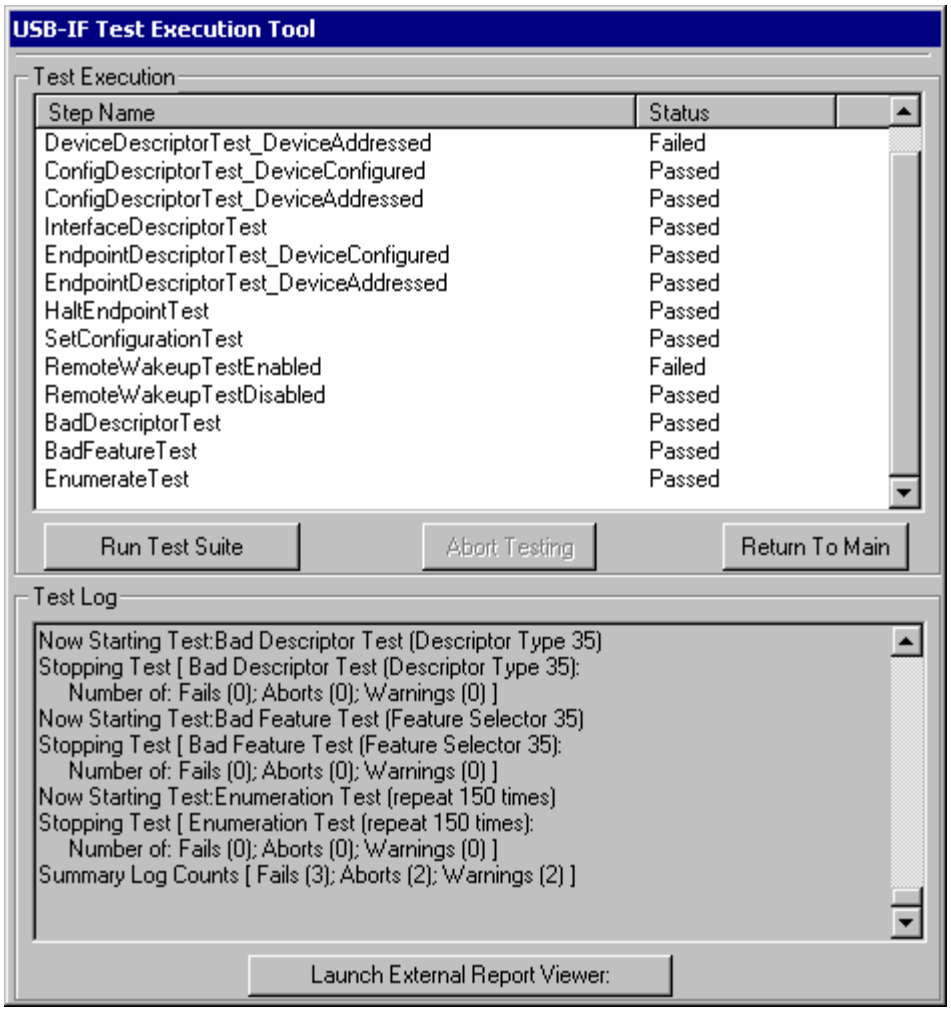

7. Record….

- Overall Pass/Fail results (A dialog will pop up displaying overall pass/fail result)
- Max Power value (obtain from test log info or by launching report viewer for html report)
- Number of Interfaces (obtain from test log info or by launching report viewer for html report)

A sample of the html test report format that can be viewed by pressing the "Launch External Report Viewer" button is shown below:

Microchip Ex. 1021, p. 47
Microchip v. Aptiv
IPR2024-00494

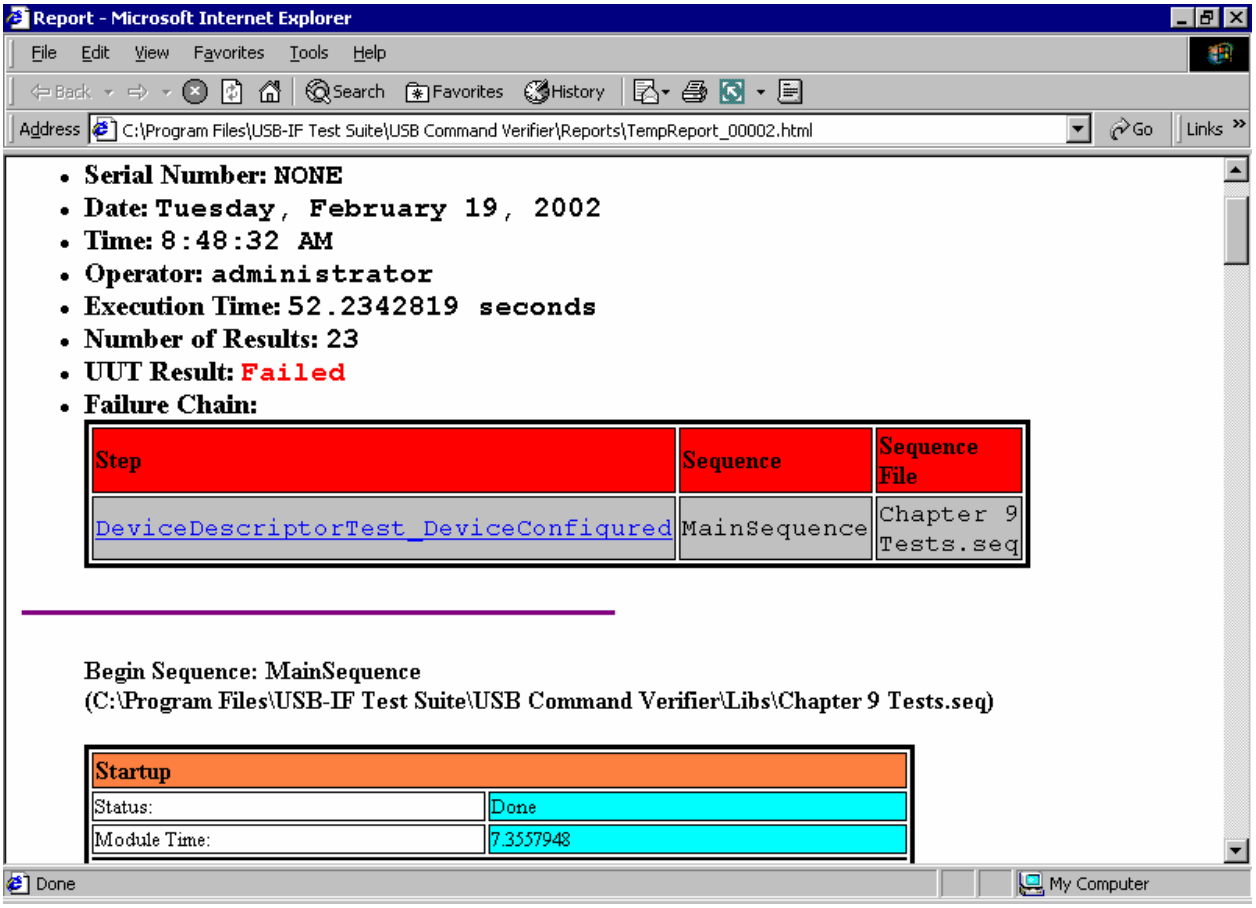

It is recommended that you do a File >> Save As with each HTML test report and save it with a descriptive name for future reference.

Microchip Ex. 1021, p. 48
Microchip v. Aptiv
IPR2024-00494

C.3.2 Re-enumerating Devices

Re-enumerating Devices are devices that download Firmware Memory data before final configuration. It is necessary to also test these devices with the Firmware Memory loaded and operable.

1. With the DUT connected to HS Hub 1, segregate the Host Vbus line from the DUT and connect a 5 Volt source directly to the DUT Vbus line. This will provide the DUT Vbus line with 5 Volts of uninterrupted power. (See Figure)

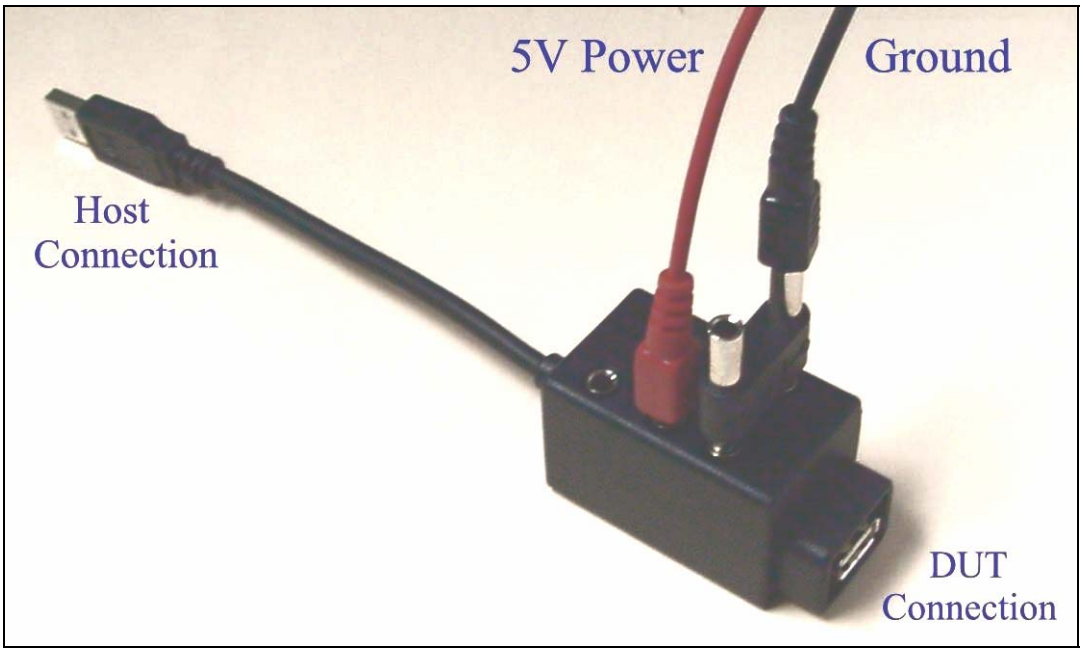

Figure C-3: Average Current Draw Test Jig with 5V power applied to the DUT side of the current receptacle and the power ground applied to the voltage ground.

2. Close USBCV.

3. Enumerate and fully configure the DUT using the native EHCI host. (Without USBCV open)

4. Start USBCV and run C.3.1 steps 3 through 7.

5. For High Speed Devices, complete test sequence with the DUT connected to the High Speed Hub (HS Hub 1) then repeat the sequence with the DUT connected to a Full Speed Hub (FS Hub 2) that is connected to HS Hub 1

Microchip Ex. 1021, p. 49
Microchip v. Aptiv
IPR2024-00494

C.3.3 Non-Hub Devices

If the device has one or more HID interfaces run USBCV/HIDView.

1. Select the Hidview test as shown below:

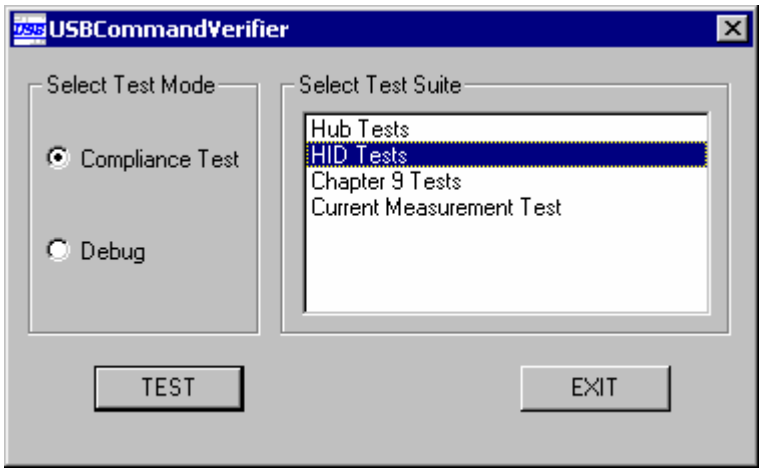

2. Run full test as shown below to test all HID interfaces for the device.

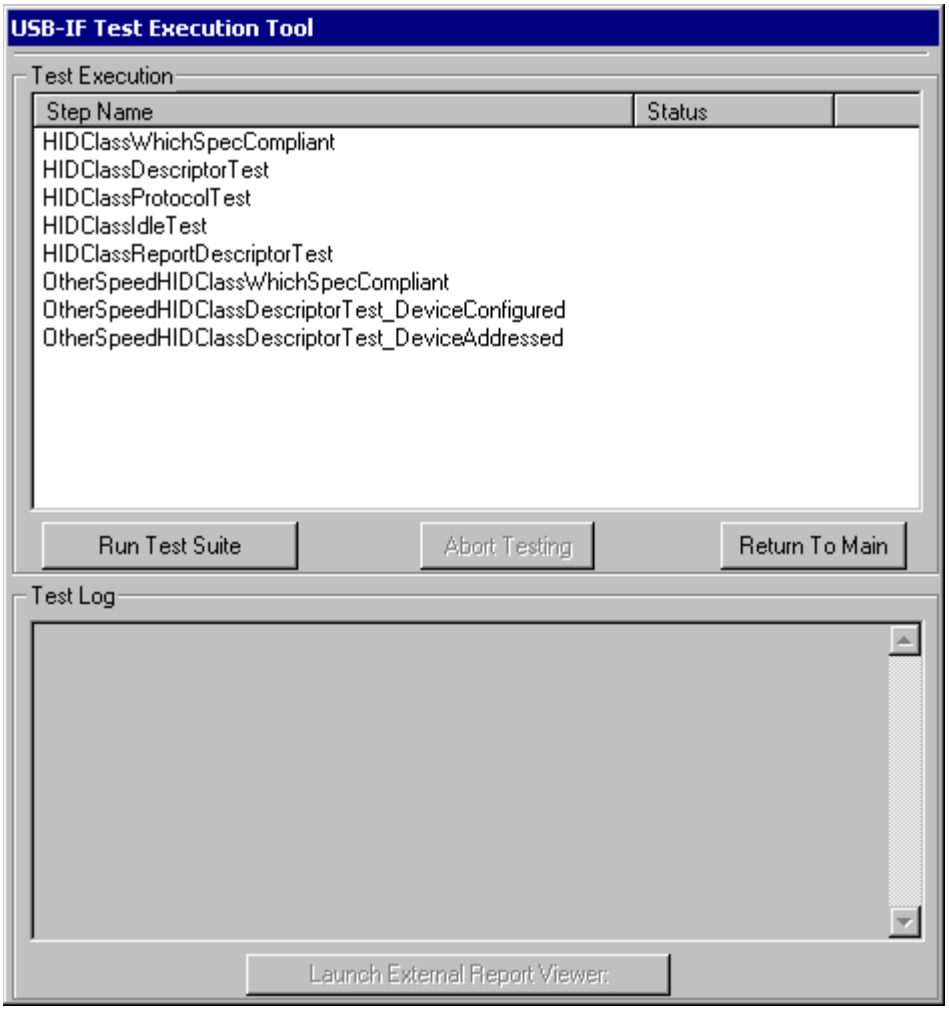

Microchip Ex. 1021, p. 50
Microchip v. Aptiv
IPR2024-00494

3. Select the device you want to test as shown below:

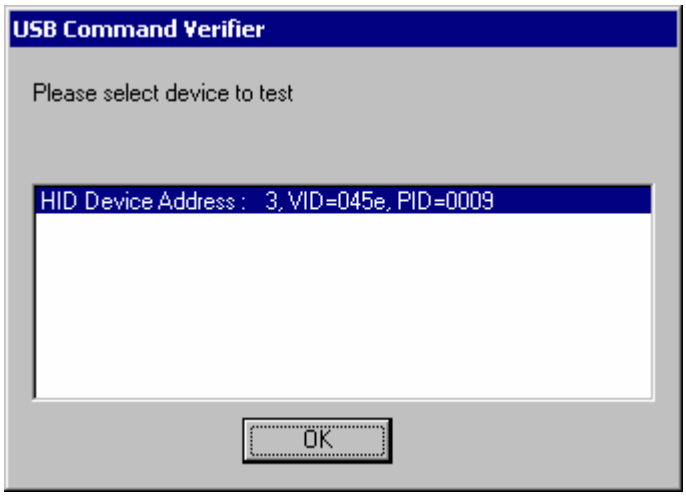

4. The results for the HID test appear as shown below. Note the overall pass / fail result for the device. Save a copy of the HTML report for the HID tests with a useful name for records.

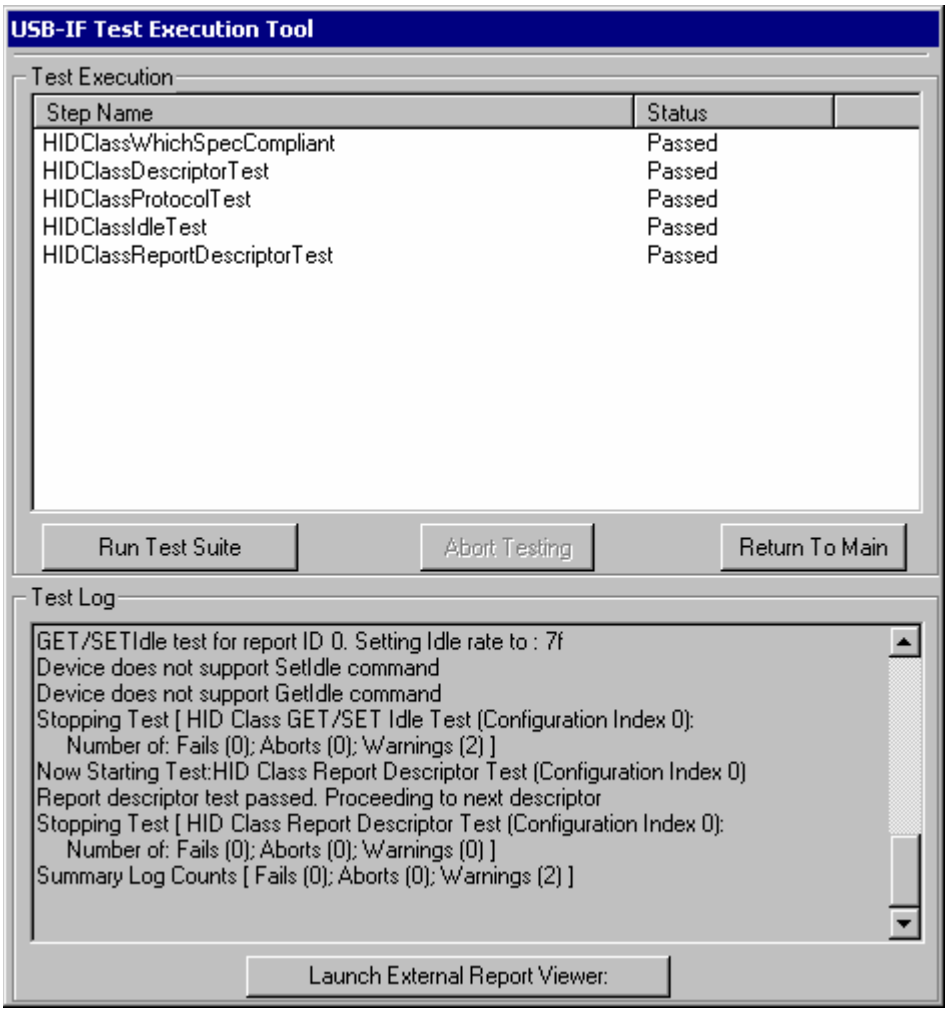

Microchip Ex. 1021, p. 51
Microchip v. Aptiv
IPR2024-00494

C.3.4 Hubs

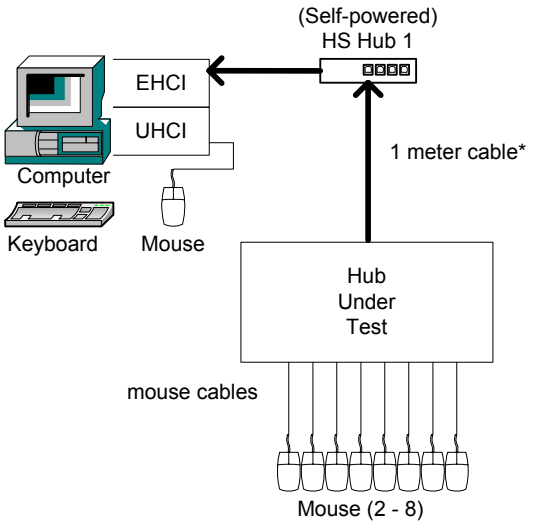

Figure C-4: 8 Port or Smaller Hub with Mouse Nest

1. Run the full automated Hub Tests

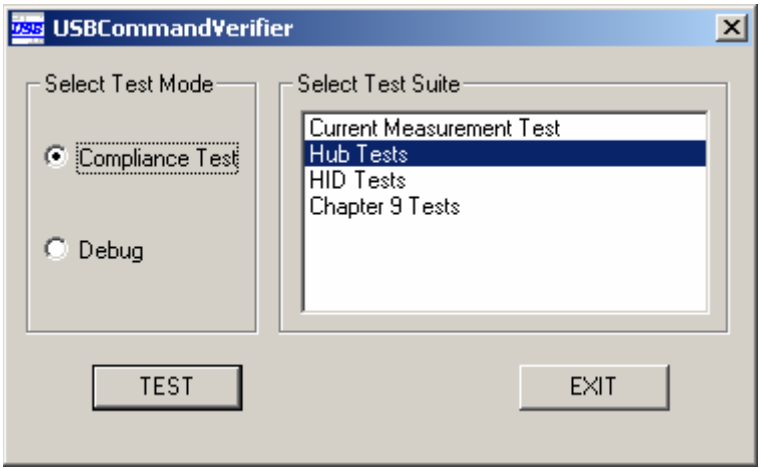

Microchip Ex. 1021, p. 52
Microchip v. Aptiv
IPR2024-00494

2. Select Run Test Suite from the test execution screen.

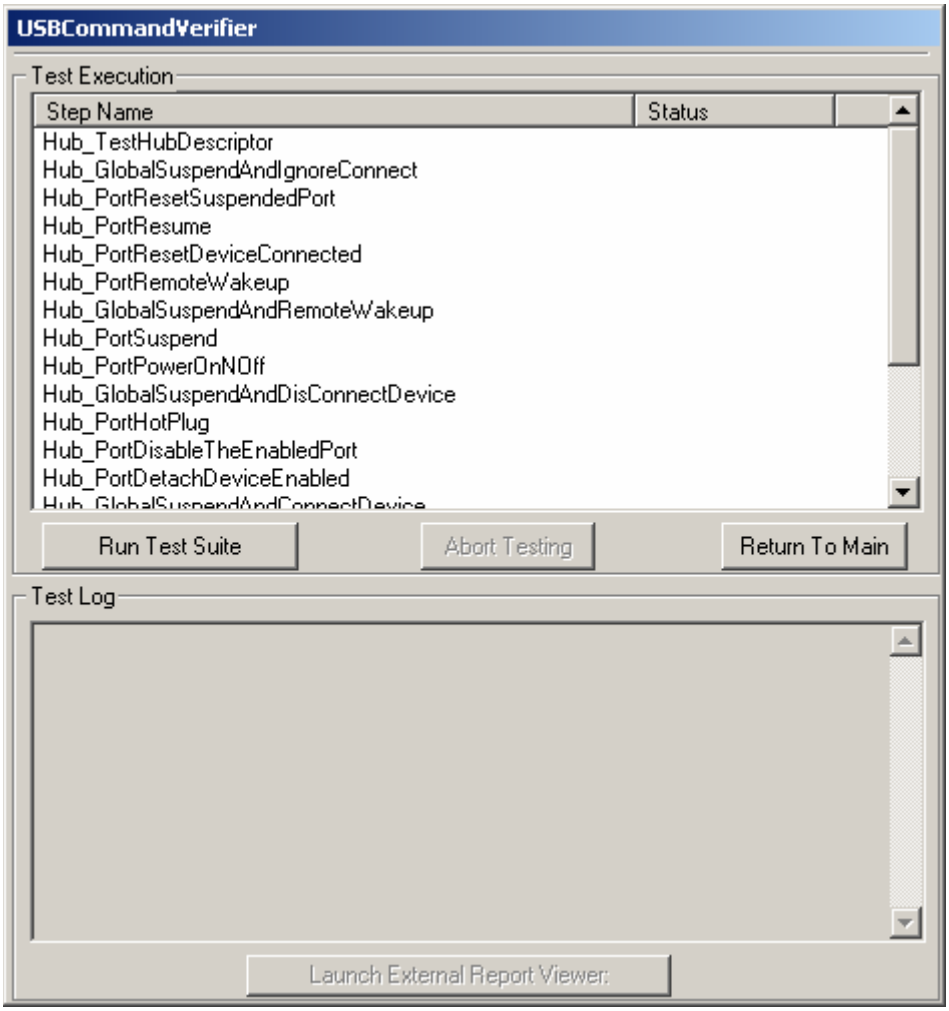

3. Be sure to select the proper hub under test

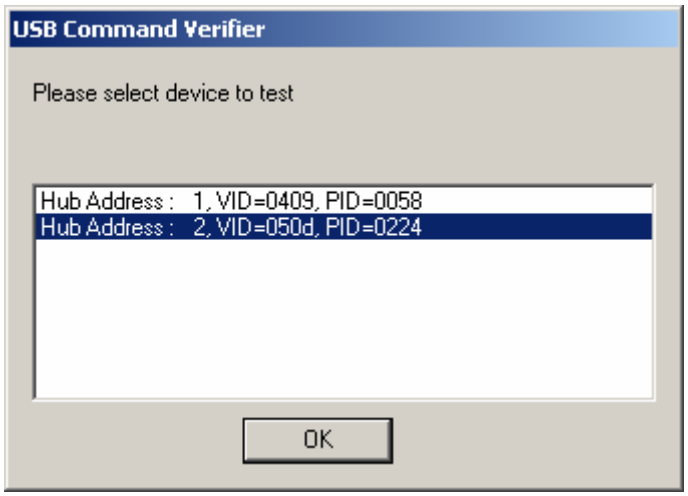

Microchip Ex. 1021, p. 53
Microchip v. Aptiv
IPR2024-00494

4. Select any inaccessible ports

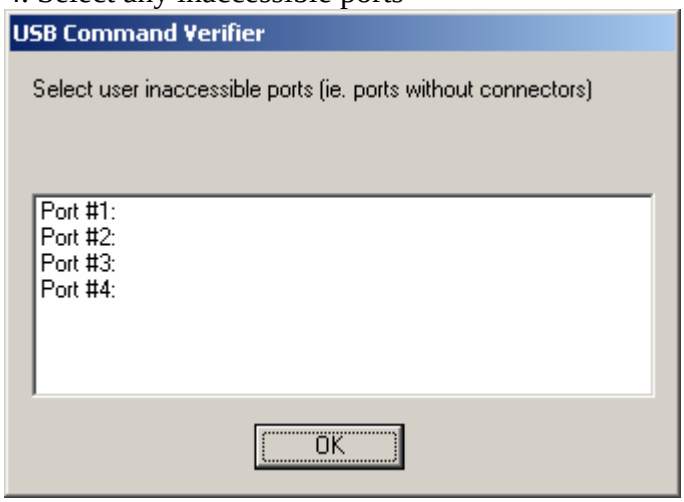

5. Follow any prompts provided by the test suite as it runs.

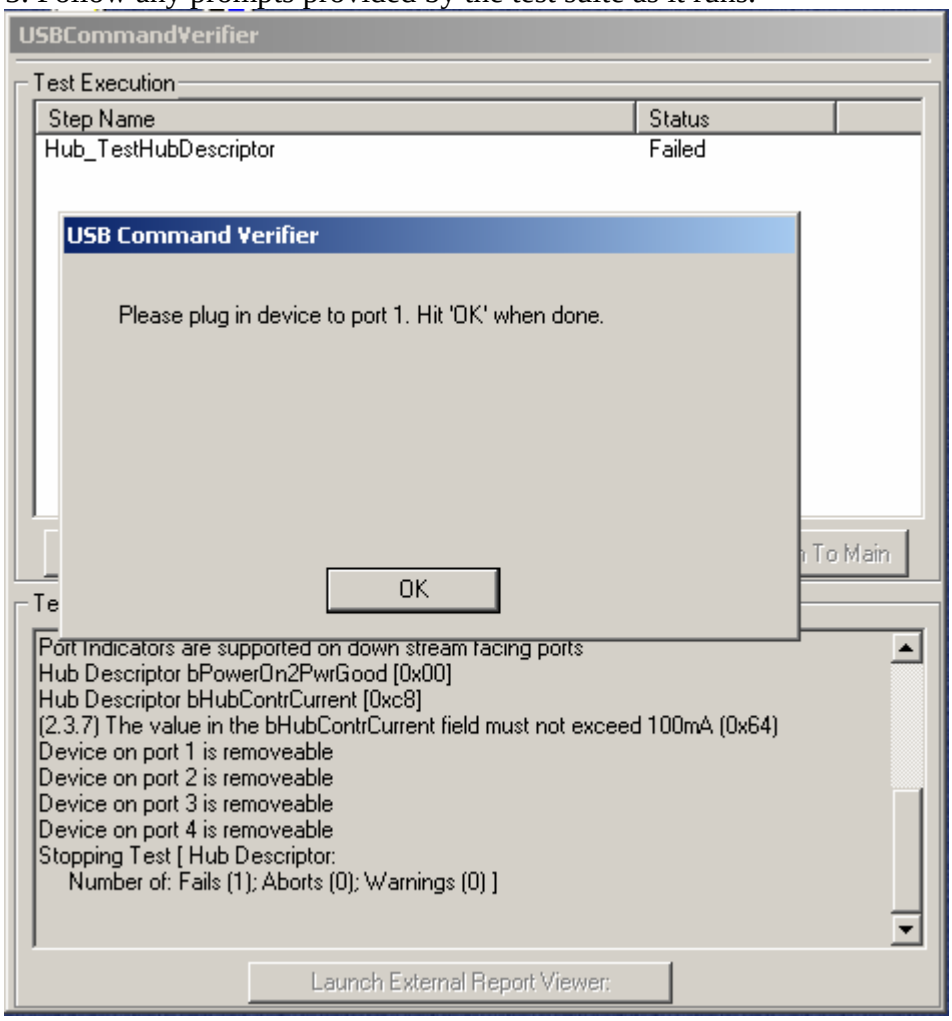

6. Record Pass/Fail results

Microchip Ex. 1021, p. 54
Microchip v. Aptiv
IPR2024-00494

C.3.5 Hubs with Embedded Devices

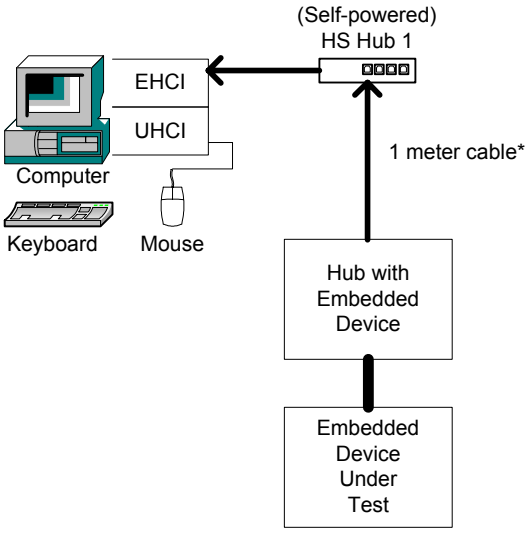

Figure C-5: Hub with Embedded Device

1. After completing testing of the hub (as detailed in the sections above), Run full chapter 9 test by selecting Chapter 9 and compliance mode as shown in beginning of this section.

2. Record…

   - Pass/Fail results
   - Max Power value
   - Number of Interfaces

Microchip Ex. 1021, p. 55
Microchip v. Aptiv
IPR2024-00494

C.3.6 All Devices – Measure "Not Configured" and "Configured" Average Current Draw

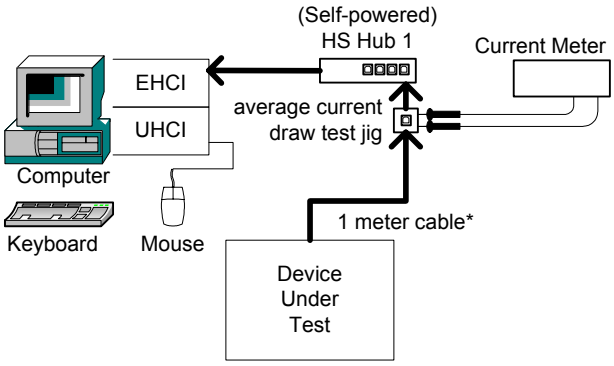

Figure C-6: Average Current Measurement

Measure current in Address state (not configured)

1. Start USBCV
2. Plug the Device or Hub under test into the average current draw test jig (use a 1 meter cable if the device uses a removable cable)
3. Run USBCV current tests

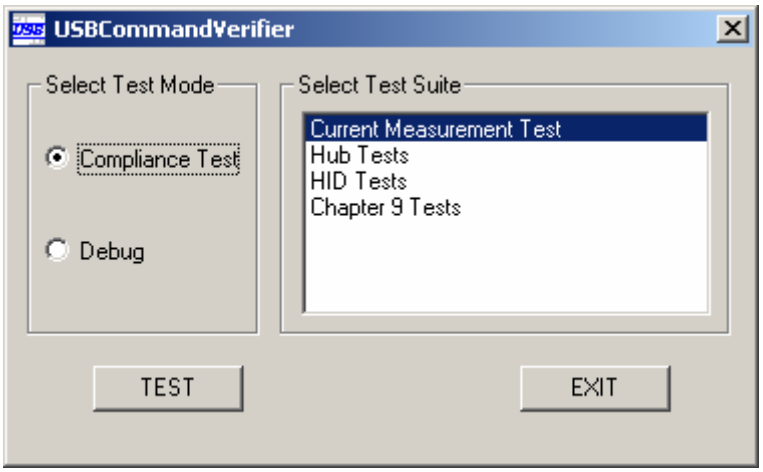

4. Verify that the device is operating by reading its descriptors
5. Record the average current shown on the Current Meter as 'not configured' current and 'configured' current as instructed by USBCV.

- Pass
  - 1 measured unconfigured current is 100 mA or less
  - 2 measured configured current is less than the value recorded during device framework testing
- Fail
  - 1 measured current exceeds 100 mA for unconfigured
  - 2 measured configured current exceeds the value recorded during device framework testing

Microchip Ex. 1021, p. 56
Microchip v. Aptiv
IPR2024-00494

6. High Speed Devices: Repeat the current draw measurements with a Full Speed hub connected between the High Speed hub and the average current draw test jig connected to the Device Under Test. This will measure the current draw in Full Speed mode.
   Record the full speed average current shown on the Current Meter as 'not configured' current and 'configured' current as instructed by USBCV.

   - Pass
     1 measured unconfigured current is 100 mA or less
     2 measured configured current is less than the value recorded during device framework testing
   - Fail
     1 measured current exceeds 100 mA for unconfigured
     2 measured configured current exceeds the value recorded during device framework testing

7. If a High Speed device fails either High Speed or Full Speed 'not configured' (unconfigured) current, and the device employs a two-step Full speed to High Speed enumeration process, re-test the unconfigured current using the USB-IF USBHSET tool.

   a. Close USBCV

   b. If USBHSET is not installed on the host system, refer to section B.1.4.2.2 for instructions to install USBHSET. (For this test, it is not necessary to have Matlab installed or any of the auxiliary tools configured.)
      Note: USBHSET and USBCV may not operate at the same time.

   c. Connect a Self Powered High Speed Hub to the EHCI controller.

   d. Start USBHSET.

   e. Select Type of Test: "Hub" and click the "Test" button.

   f. Plug the average current draw test fixture into hub port #1. (You may use USBHSET or other tools to determine the hub port #1 prior to beginning step d. of this test sequence.)

   g. Plug the Device or Hub under test into the average current draw test fixture. (use a 1 meter cable if the device uses a removable cable)

   h. Select "Reset" from the "Port Control" selection box drop down menu. Select Port "1". Click the "EXECUTE" button.

   i. Read the 'not configured' (unconfigured) current.

   - Pass
     1 measured unconfigured current is 100 mA or less
   - Fail
     1 measured current exceeds 100 mA for unconfigured

Microchip Ex. 1021, p. 57
Microchip v. Aptiv
IPR2024-00494

C.4 Reporting Results

1. Number of Interfaces: (number must be greater than zero)
2. Max Power: If self-powered 100 mA or less, if bus-powered 500 mA or less
3. Remote WakeUp Support: Yes/No
4. Chapter 9 comments: text
5. Chapter 11 test results: Pass/Fail/NA
6. Compound Device: Yes/No
7. Chapter 11 comments: text
8. HIDView test results: Pass/Fail/NA
9. HIDView comments: text

Microchip Ex. 1021, p. 58
Microchip v. Aptiv
IPR2024-00494

D Windows 2000 and Windows XP Peripheral Interoperability Testing

Interoperability testing covers several areas including device framework, average current draw, and the device's ability to interoperate with the host system and coexist with other USB devices. It also provides some insight into usability issues of the device and associated software.

Interoperability makes use of an arrangement of USB peripherals known as the "Gold Tree." The gold tree consists of these characteristics:

- Provides isochronous, bulk, interrupt and control traffic
- Tests the device behind 5 levels of nested hubs – the maximum allowed
- Tests the device up to 30 meters from the host – the maximum allowed
- Contains a high-speed branch and full-speed speed branch
- EHCI, UHCI and OHCI controllers available for testing

This document cannot cover all possible configurations and combinations of devices, hubs and embedded devices. Test guidelines for unique devices that do not fall into categories outlined in this document should be brought to the attention of TechAdmin@usb.org for assistance.

Microchip Ex. 1021, p. 59
Microchip v. Aptiv
IPR2024-00494

D.1 Equipment Used

Note that the equipment listed, the test procedure steps, and the actual list of required tests is expected to change periodically. Please refer to http://www.usb.org/developers/compliance on the USB-IF, Inc. web site for the latest version of this document.

Item	Description / Model	Qty
USB Host System	Hardware Configuration: Intel D865GLC MATX Motherboard, Intel P4 HT CPU* 512MB DDR333, (2) 120GB UATA/100 HD w/ 8MB cache, 16x DVD-ROM Drive, 1.44MB Floppy Drive, IOGEAR GIC250U USB OHCI Host PCI Adapter	1
USB mouse	Logitech mouse P/N 830524-0000 or equivalent	1
USB Keyboard	Logitech Internet Navigator Model:Y-BF37 RT7R25 Part: 867224-0100	1
HS Bulk USB Flash Media	LexarMedia JumpDrive Pro 2.0	1
FS Hub (Self-powered)	Belkin F5U100 / F5U101	2
HS Isochronous PC Camera	Veo Velocity Connect	1
HS Bulk USB Drive	Maxtor 3000 LE	1
HS Hub (Self-powered)	American Power Conversion (APC) 19500SG-1G USB 2.0 4-port Hub OR IOGEAR GUH224 USB 2.0 High Speed 4-port Hub	4
Multi-Transaction Translator Hub	Belkin TetraHub F5U231	1
one meter USB cables	any listed on USB-IF Cables and Connectors Integrators List	2
five meter USB cables	any listed on USB-IF Cables and Connectors Integrators List	12
digital multimeter	Ampere range: 1uA – 3A Voltage range: 1mV – 6V	1
average current draw test jig	[test fixture acquired through USB-IF, Inc.]	1
* The host system does not define a processor speed. Any processor speed of Pentium 4 with Hyper-Threading Technology is permitted on the Intel D865GL CL MATX Motherboard.		

The listed equipment is the official gold tree used by the USB-IF and affiliated test houses for certification purposes. It is highly recommended that vendors expand in-house interoperability testing to include many more devices and hosts.

If a specific gold tree device cannot be obtained, it may be substituted with a similar, certified device. If a substitution is necessary, the following guidelines will help to select an appropriate replaecement.

USB Host System: The motherboard has an available PCI slot to hold the IOGEAR USB Host Adapter. It also has an Embedded EHCI with embedded UHCI for downward compatibility. The processor speed is not important, but the fact it supports hyper-threading is. Using a hyper-threaded processor significantly improves performance of multiple high-speed isochronous USB devices. The onboard USB controller does not support auxiliary VBUS, so during S3 suspend, VBUS is never removed. Memory and disk storage should be big enough to eliminate insufficient resources for software.

Microchip Ex. 1021, p. 60
Microchip v. Aptiv
IPR2024-00494

IOGEAR USB Host Adapter: This adapter provides OHCI compatibility testing. It also does not support auxiliary VBUS via PCI, so during S3 suspend without remote wakeup, VBUS on the USB is removed. This emulates suspend used by most laptop computers.

Hubs: Although not defined by the USB specification, the Windows operating system limits the number of tiers of hubs to five. The gold tree still uses full-speed as well as high-speed hubs since all high-speed peripherals must support full-speed.

Video Camera: This gold tree introduces a high-speed, isochronous transport, high-power, bus powered device. Poor support and complexity has delayed such product from entering the market until now. At the time of publication, few certified products of this type are available.

Mass Storage: Almost any certified high-speed, self-powered, bulk device may be used.

USB Flash Media Drive: A flash media drive was selected due to the increasing popularity of this type of high-speed, bus powered, bulk transport device.

USB Keyboard and Mouse: Almost any certified low-speed, interrupt transport HID device will do.

Five meter cables: The USB specification allows a maximum of 5 meters for a USB cable. To test worse case propagation delays, the use of certified five meter cables is mandatory.

Multi-TT Hub: The multi-transaction translator hub is a new addition to the gold tree. Each downstream port of a multi-TT hub has its own transaction translator instead of a single transaction translator being shared among all downstream ports. The multi-TT Belkin TetraHub F5U231 (shown below) has an added feature of a speed indicator for each port. The color of the LED indicates the speed at which the attached device is operating. Green = low-speed; Red = full-speed; and Yellow/Orange for high-speed.

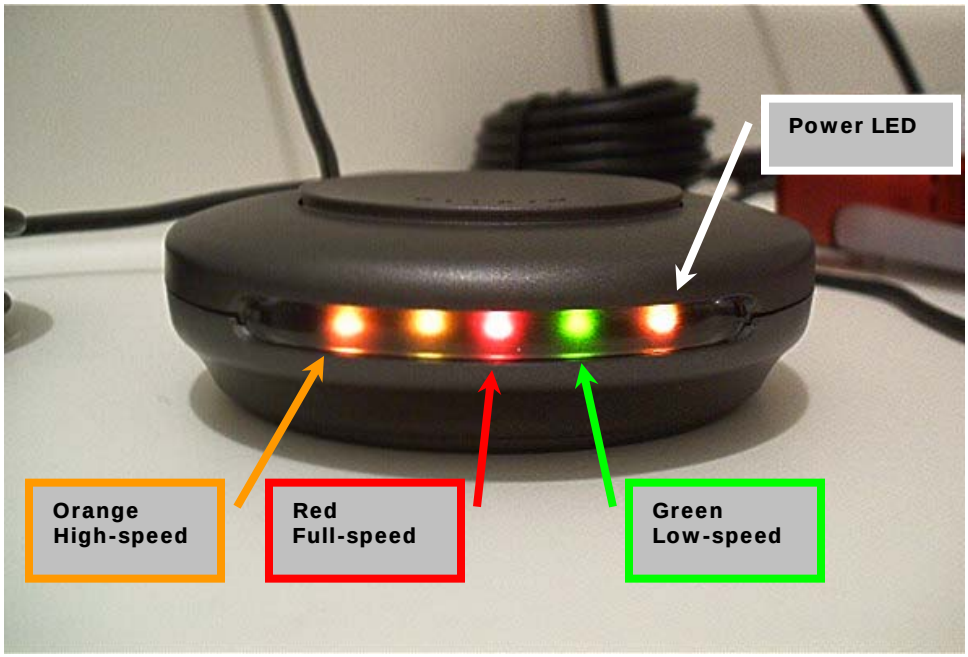

Microchip Ex. 1021, p. 61
Microchip v. Aptiv
IPR2024-00494

D.1.1 Equipment Setup

Ensure the latest BIOS and driver updates are loaded for the Intel D865GLC MATX Motherboard by visiting Intel's website at: http://www.intel.com/support/motherboards/desktop/d865glc/index.htm. If a different motherboard is used, check with the motherboard vendor for latest updates.

Configure the host system's BIOS settings according to the following table prior to installing any operating system.

BIOS Option	Setting
Plug and Play OS	ON
USB Boot	OFF
High-Speed USB	ON
S3 Suspend	ON
ACPI	ON
Boot Sequence	1st Floppy 2nd CD-ROM 3rd Hard Disk

BIOS Option	Setting
USB Legacy Support	ON
APIC	ON
Quick Boot	ON
Clear ESCD	YES
Hyper-Threading	ON

Install the IOGEAR GIC250U USB OHCI Host PCI adapter into any available PCI slot.

D.2 Software Used

Item	Description / Model
Operating system	Microsoft Windows 2000 Professional
Operating system	Microsoft Windows XP Professional
Disk imaging utility	Symantec Ghost *or* PowerQuest Drive Image *or* V Communications DriveWorks

D.2.1 Software Logistical Overview

Certification is permitted using either Windows XP Professional or Windows 2000 Professional. Testing with both or other operating systems is encouraged, but not required.

Testing should be performed on a new and clean installation of the operating system. A clean install of the OS is mandatory if prior test runs included installation of custom drivers and associated applications. Instead of formatting the drive and installing the OS before every test run, using a disk imaging utility to restore a copy of a clean OS is acceptable.

Large data files of at least 1MB in size should be used for mass storage testing. A means of validating the data after transfer to/from the mass storage device is required. Using a utility, such as WinZip Computing Inc.'s WinZip which automatically performs a CRC on its data, is acceptable to validate the data.

A means to render streaming video from the video camera is required. The software that accompanies the Veo camera or other twain compatible utility is acceptable for exercising the Veo camera.

Microchip Ex. 1021, p. 62
Microchip v. Aptiv
IPR2024-00494

To operate the device under test, use the vendor supplied software if provided. Be sure to use the device in a stressful manner. In all cases, the functionality of the device must be verifiable.

D.2.2 Install Windows 2000 Professional or Windows XP Professional

The host software required is Windows 2000 Professional or Windows XP Professional. Either restore the saved image of the previously prepared system or follow the steps given below.

Use the default installation options: select 'typical' system configuration and install 'most common components'. The file system should be NTFS as this is the most robust and can usually survive system crashes.

Install any required platform-specific drivers. All devices should be 'working properly', *i.e.* no yellow exclamation points visible in Device Manager. There should also be no 'unknown devices' shown in the Device Manager.

Use Windows Update to obtain *all* the latest service packs and recommended updates.

D.3 Initialize the Gold Tree

Hubs are identified by their operating speed and their placement (tier level). So the nomenclature "Hub HS2" identifies a High-Speed Hub at tier 2 and "Hub FS3" identifies a Full-Speed Hub on tier 3.

Construct a tree of USB devices as outlined below. For a visual representation of the gold tree, please see Figure E-1: Interoperability Gold Tree Configuration on the following page.

Tier	Device
1	• **Hub HS1** – APC 19500SG-1G 4-port Hub
1	• **Hub FS1** – Belkin F5U101/100 FS Hub
2	• **Hub HS2** – APC 19500SG-1G 4-port Hub on port 1 of Hub HS1
3	• **Hub FS3** – Belkin F5U101/100 (bus powered) on port 1 of Hub HS2
3	• Logitech mouse on port 1 of Hub FS3
3	• Logitech Keyboard on port 3 of Hub FS3
3	• LexarMedia JumpDrive Pro 2.0 on port 4 of Hub FS3
3	• **Hub HS3** – APC 19500SG-1G 4-port Hub on port 4 of Hub HS2
4	• **Hub HS4** – APC 19500SG-1G 4-port Hub on port 3 of Hub HS3
5	• **Hub HS5** – Belkin TetraHub F5U231 on port 3 of Hub HS4
5	• Veo Velocity Connect WebCam on port 4 of Hub HS5
5	• Maxtor 3000 LE on port 2 of Hub HS5

Attach Gold Tree Hub HS2 to port #1 of Hub HS1. And attach Hub HS1 to a motherboard EHCI root port. Do not attach to the front panel but to ports that connect directly to the motherboard at the rear.

Install required drivers and associated software for each gold tree device. Visit the website for each gold tree device to ensure the latest driver and software is used. Visit Windows Update to verify no additional updates are available.

Microchip Ex. 1021, p. 63
Microchip v. Aptiv
IPR2024-00494

Verify that all the devices are operating properly by starting the appropriate applications: read data from both disks, stream video from the camera, type on the keyboard and move the mouse. After verifying the gold tree is operating properly, shut down all applications.

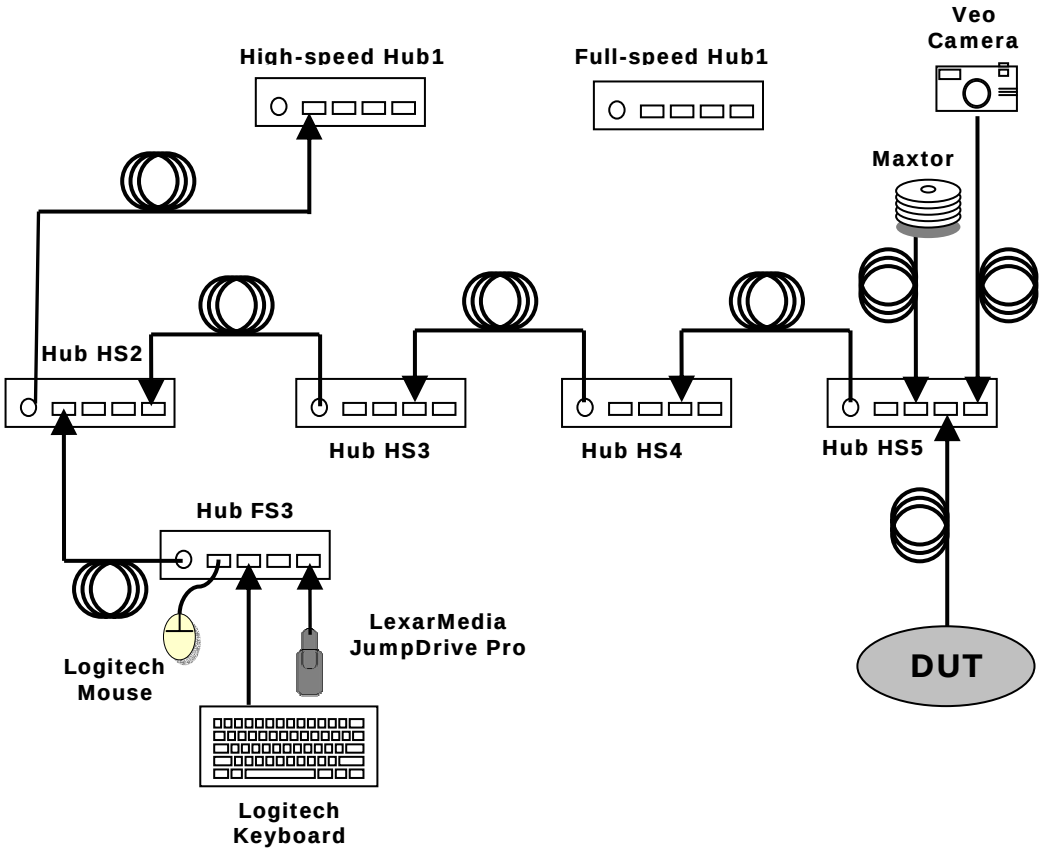

Figure E-1:

Microchip Ex. 1021, p. 64
Microchip v. Aptiv
IPR2024-00494

D.4 Interoperability Logistical Overview

Interoperability certification requires devices to operate on EHCI, UHCI and OHCI. Because the motherboard only supports EHCI and UCHI, an add-in PCI USB host adapter containing EHCI and OHCI is required.

The reason for including the EHCI on the PCI adapter in interoperability tests is that it handles S3 suspend differently from the motherboard EHCI. The motherboard USB does not remove power from Vbus during S3 suspend; whereas, Vbus on the PCI adapter does go away during S3 suspend. Both are equally valid suspend states and must be properly supported.

Both system sleep states S1 and S3 are tested. Be sure to verify that the appropriate sleep state is activated by checking the fans in the system. The fans remain running during an S1 sleep state; whereas, the fans will turn off during an S3 suspend.

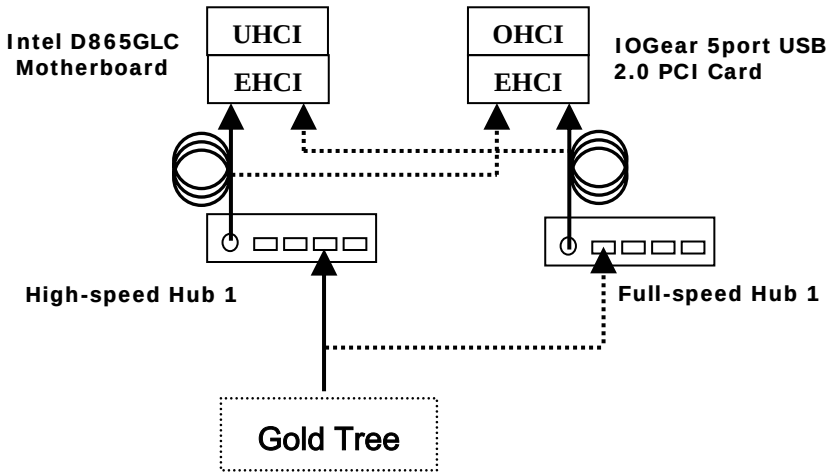

Figure D-2: Gold Tree Connection to Host

For ease of testing, a high-speed and a full-speed hub is positioned on tier 1. When high-speed is to be tested, the gold tree starting at Hub HS2 connects to Hub HS1 which in turn connects to the desired EHCI root port. The EHCI controller automatically connects upon detection of the high-speed hub. Conversely, to test UHCI or OHCI, the gold tree connects to the Hub FS1 which in turn connects to the corresponding root port. The full-speed host controller (UHCI or OHCI) automatically connects upon detection of the full-speed hub.

If desired, two HS hubs and two FS hubs may be used on tier 1. By connecting a HS and FS pair to the PCI based host controller and the other pair to the motherboard host controller, the need to move USB cables from one root port to the next is eliminated. The gold tree simply needs to connect to the appropriate tier 1 hub of the desired host controller.

Caution should be used when testing out of sequence with the steps outlined. This test procedure is scripted and individual steps may be dependent upon previous test steps having been performed.

Microchip Ex. 1021, p. 65
Microchip v. Aptiv
IPR2024-00494

D.5 Interoperability Test Steps

D.5.1 Device Interoperability

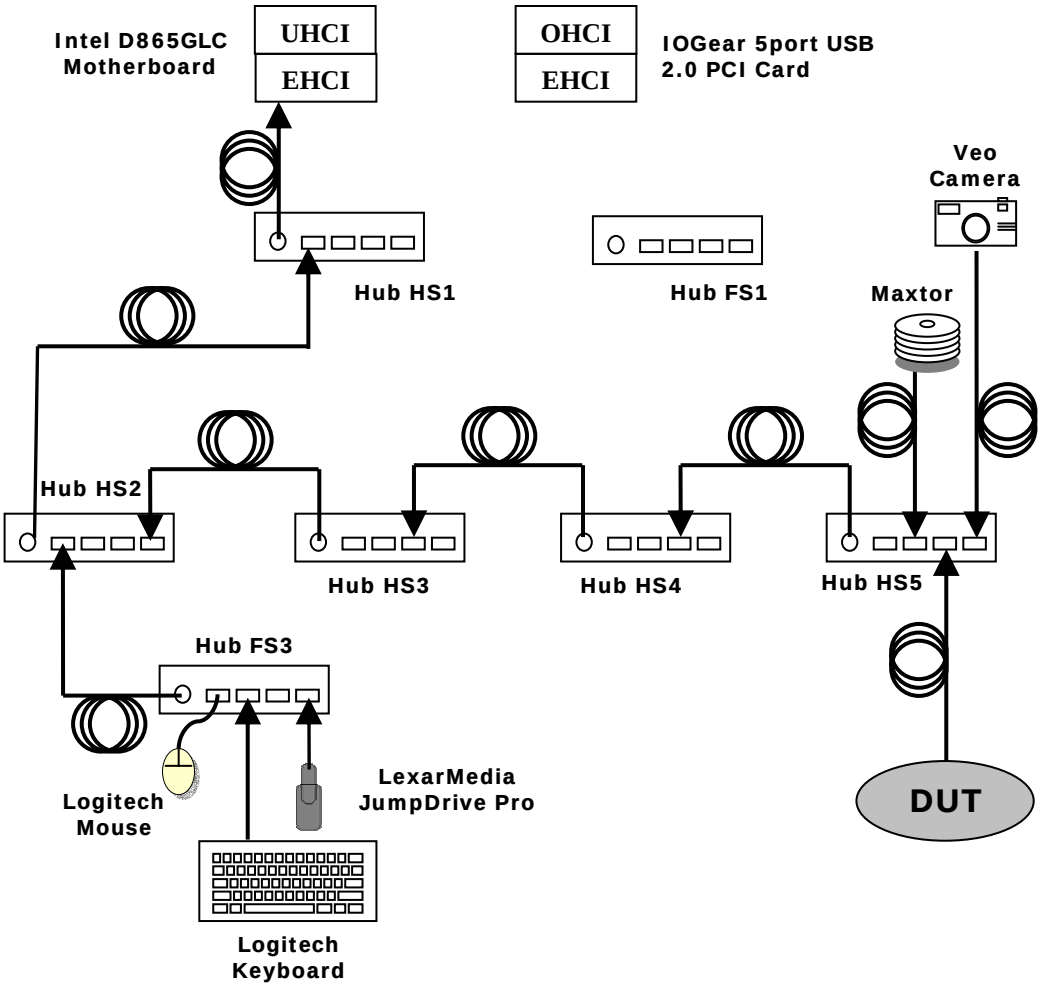

Figure D-3 Motherboard EHCI Test Configuration

1. Attach Hub HS1 to a root port on the motherboard. (Do not use a front panel port.) Attach the gold tree, via Hub HS2, to Hub HS1.
2. Plug in the DUT into the open port on the multi-TT Hub HS5.
   - Do NOT install any drivers or software prior to attaching the device
   - Use a 5 meter cable if the device does not have a captive cable

Microchip Ex. 1021, p. 66
Microchip v. Aptiv
IPR2024-00494

3. Enumeration and Driver Installation test on EHCI

   One of two scenarios is acceptable after the DUT is attached:

   a. The DUT enumerates and the OS identifies and automatically installs its device driver. The enumeration test is now complete.
   b. The DUT enumerates and the OS displays a dialog box asking for the location of the driver. Insert the appropriate vendor-supplied driver disk and click OK. Follow the OS instructions to complete the driver install.

   If the driver fails to install after attempting driver installation outlined above, follow the vendor recommended install procedure.

   - Pass

     1 Device under test enumerates behind HS5 using a 5 meter cable or its own captive cable

     AND

     2 Driver installs with an .INF file (provided on a floppy or a CD) or is enumerated automatically by the system (class driver)

     AND

     3 Device under test does not require a reboot

     AND

     4 Device under test is correctly identified by Device Manager and no yellow exclamation point is shown for any device

   - Fail

     1 Device under test cannot be installed because it requires driver installation or application software BEFORE device under test is ever plugged in

     OR

     2 Device under test does not enumerate below hub #5

     OR

     3 Driver blue screens during enumeration

     OR

     4 Device under test requires reboot

     OR

     5 Device under test is incorrectly identified by Device Manager or a device is flagged as not operational (yellow exclamation point)

4. DUT demonstrates correct operation using default driver connected to Hub #5 with the 5 meter cable (if cable not captive).

   - Pass

     1 Device under test operates as expected with the 5 meter cable (if cable not captive).

   - Fail

     1 Device under test fails to operate

     OR

     2 Device / application blue screens / crashes system

     OR

     3 Device fails to operate as expected below Hub #5

Microchip Ex. 1021, p. 67
Microchip v. Aptiv
IPR2024-00494

5. Update Driver (if applicable)

   If there is a vendor-supplied driver disk or CD

   AND

   the drivers installed in step 1 were part of the operating system (i.e. the drivers were not loaded from the vendor-supplied driver disk or CD), update the driver using Device Manager.

   Otherwise, skip to step 6

   - Pass
     1. Device under test does not have a vendor supplied driver
        OR
     2. Driver is updated successfully with NO blue screens
        AND
     3. No reboot is required
        AND
     4. New driver is reported correctly in Device Manager
   - Fail
     1. Any blue screen of death
        OR
     2. Device under test requires reboot
        OR
     3. New driver is not reported correctly in Device Manager

6. If the DUT has an associated software application:
   - If the software is not part of the driver install, then install the software application now
   - Otherwise, assess the software installation.
   - Pass
     1. Software installs without blue screens
        AND
     2. Reboot is not required
        OR
     3. No software required
   - Fail
     1. Installation software blue screens / crashes system
        OR
     2. Software requires a reboot for no valid reason

Microchip Ex. 1021, p. 68
Microchip v. Aptiv
IPR2024-00494

7. Demonstrate operation of DUT with updated driver and application (if applicable)

   - Pass

     1 Device under test does not have an updated driver
     OR
     2 Device under test operates as expected with the 5 meter cable (if cable not captive).

   - Fail

     1 Device under test fails to operate
     OR
     2 Device / application blue screens / crashes system
     OR
     3 Device under test operates as expected but not when installed below Hub #5

8. Verify the operating speed of the DUT by observing the speed indicator of the port to which it is attached. Green = low-speed; Red = full-speed; and Yellow/Orange for high-speed.

   - Pass

     1 Device is operating at its designated speed

   - Fail

     1 Device is not operating at its designated speed.

9. Interoperability

   Operate all the devices in Gold Tree. Verify that the DUT functions correctly while all other devices are operating concurrently.

   - Operate the device under test
   - View live video from the Veo camera
   - Transfer a large file between the Maxtor drive and the JumpDrive Pro
   - Strike keys on the Logitech keyboard
   - Disconnect and reconnect the Logitech mouse in the same port on Hub FS3
   - Move the Logitech Mouse verifying it still works

   - Pass

     1 Device under test operates as expected
     AND
     2 Gold Tree devices all operate

   - Fail

     1 Device under test fails to operate
     OR
     2 One or more Gold Tree devices fail to operate

Microchip Ex. 1021, p. 69
Microchip v. Aptiv
IPR2024-00494

10. Hot Detach & Reattach
    - Stop DUT operation!
    - Detach and reattach DUT to same hub port.
    - Test functionality of DUT only.
    - Pass
        1 Device under test operates as expected
    - Fail
        1 Device under test fails to operate as expected

11. Topology Change
    - Stop DUT operation!
    - Detach the DUT and reattach DUT to port 3 on Hub FS3
    - Test functionality of DUT only. [Note: At the time of this writing, high-speed isochronous devices are not able to operate correctly in conjunction with interrupt transport devices on a full-speed bus.]
    - Pass
        1 Device under test operates as expected
    - Fail
        1 Device under test fails to operate as expected

    RETURN THE DUT TO HUB HS5 BEFORE PROCEEDING!

12. Warm boot
    - Restart system through the start menu (Start -> Shutdown -> Restart).
    - Test functionality of DUT after system reboots.
    - Pass
        1 Device under test operates as expected
    - Fail
        1 Device under test fails to operate as expected

13. Cold boot
    - Restart system through the start menu (Start -> Shutdown -> Shutdown)
    - Turn PC back on
    - Test functionality of DUT after system reboots.
    - Pass
        1 Device under test operates as expected
    - Fail
        1 Device under test fails to operate as expected

Microchip Ex. 1021, p. 70
Microchip v. Aptiv
IPR2024-00494

14. Active S1 Suspend

To enable S1 suspend, enable remote wake-up on a USB device. IF THE DEVICE UNDER TEST SUPPORTS REMOTE WAKE-UP, ENABLE IT. Otherwise, enable remote wakeup on the USB Logitech mouse.

While device under test is actively operating, suspend the system. (Use the "Sleep" button on the Logitech USB keyboard.) System is placed in standby.

Note: Verify that the system's fans are still running during suspend -- this is an S1 sleep state. If the fans are not running, then the system is in S3 and the test is not valid.

Note: If the system does not go into standby, then a message must appear saying that the active DUT will not allow suspend to occur.

- Pass
  1. System suspends to S1
     OR
  2. System notifies user that the system cannot go into suspend
- Fail
  1. The system does not enter suspend without notification
     OR
  2. System blue screens / locks up

15. Active S1 Resume (Applicable only if system is suspended)

If the device under test supports remote wake-up, use it to resume the system; otherwise, simply wake the system. Upon resuming, verify that the active operation initiated in the previous step continues without error. Also, verify that the device is functioning at its nominal operating speed.

NOTE: If the device under test supports remote wake-up and the system resumes using the DUT, then this test supercedes remote wakeup errors reported by USBCV.

- Pass
  1. System resumes
     AND
  2. Active operation initiated in previous step continues without error
- Fail
  1. System does not resume
     OR
  2. System blue screens / locks up
     OR
  3. Device under test is not functional or does not continue operation in the previous step

Microchip Ex. 1021, p. 71
Microchip v. Aptiv
IPR2024-00494

16. Inactive S1 Suspend

While device under test is idle, suspend the system. (Use the "Sleep" button on the Logitech USB keyboard.) The system is placed in standby. Verify that the system's fans are still running.

- Pass
  1. System suspends
- Fail
  1. The system does not enter suspend
     OR
  2. System blue screens / locks up

17. Inactive S1 Resume

If the device under test supports remote wake-up, use it to resume the system; otherwise, simply wake the system. Upon resuming, verify that the DUT is able to operate. Also, verify that the device functions at its nominal operating speed.

NOTE: If the device under test supports remote wake-up and the system resumes using the device, then this test supercedes remote wakeup errors reported by USBCV.

- Pass
  1. System resumes
     AND
  2. Device under test operates without error
- Fail
  1. System does not resume
     OR
  2. System blue screens / locks up
     OR
  3. Device under test is not functional

18. Active S3 Suspend

To enable S3 suspend, disable remote wake-up on all USB devices.

While device under test is in active operation, suspend the system. (Use the "Sleep" button on the Logitech USB keyboard.) System is placed in standby.

Note: Verify that the system's fans are not running during suspend -- this is an S3 sleep state. If the fans are running, then the system is in S1 and the test is not valid.

Note: If the system does not go into standby, then a message must appear saying that the active DUT will not allow suspend to occur.

Microchip Ex. 1021, p. 72
Microchip v. Aptiv
IPR2024-00494

- Pass
  1. System suspends
     OR
  2. System notifies user that the system cannot go into suspend
- Fail
  1. The system does not enter suspend without notification
     OR
  2. System blue screens / locks up

19. Active S3 Resume (Applicable only if system is suspended)

    Wake the system. Upon resuming, verify that the active operation initiated in the previous step continues without error.

- Pass
  1. System resumes
     AND
  2. Active operation initiated in previous step continues without error
- Fail
  1. System does not resume
     OR
  2. System blue screens / locks up
     OR
  3. Device under test is not functional or does not continue operation in the previous step

Microchip Ex. 1021, p. 73
Microchip v. Aptiv
IPR2024-00494

20. Switch Testing to UHCI

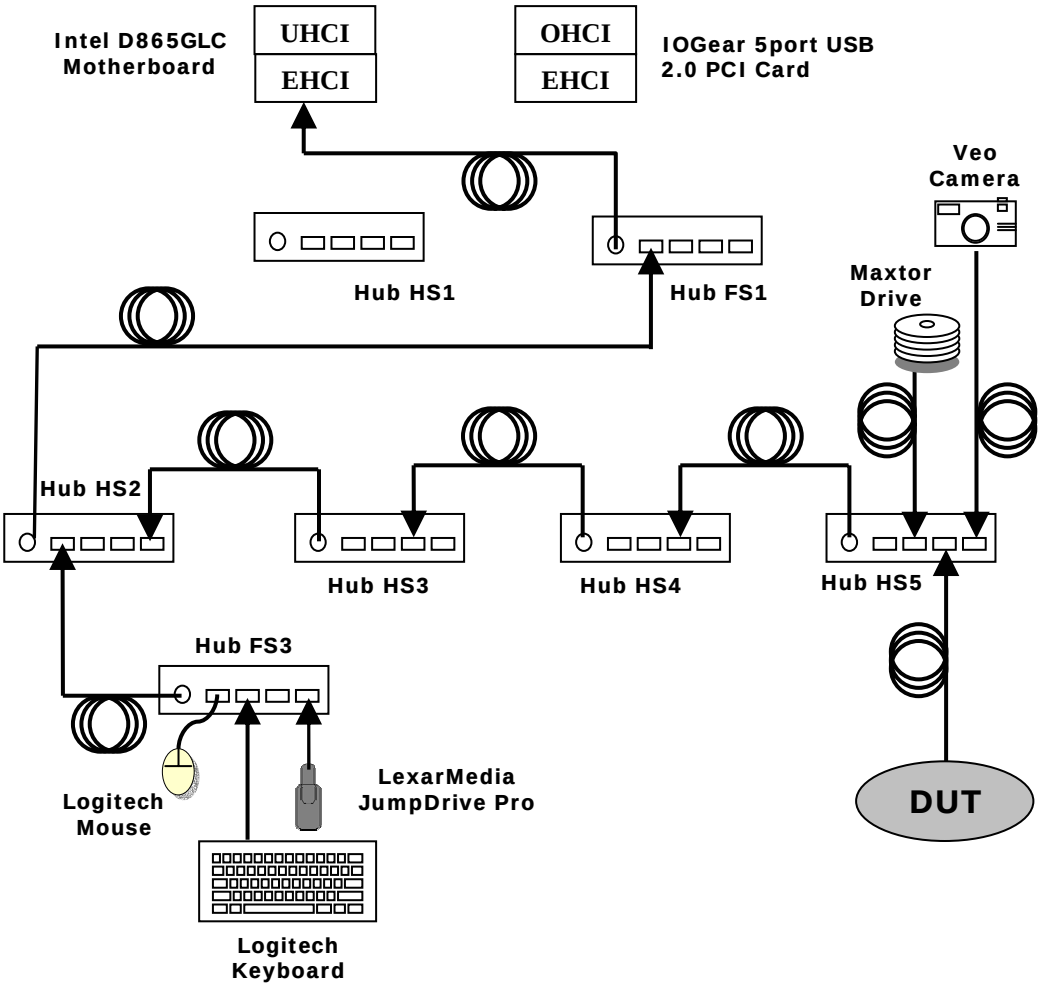

Figure D-4 Motherboard UHCI Test Configuration

- Connect Hub FS1 to a root port on the motherboard. Do not use front panel USB ports.
- Connect Hub HS2 to port #1 on Hub FS1

Microchip Ex. 1021, p. 74
Microchip v. Aptiv
IPR2024-00494

21. Enumerate device under test below hub #5. Use a 5-meter cable unless the device under test has a captive cable

- Pass

  1 Device enumerates with a 5 meter cable (if cable is not captive)
  AND

  2 Device enumerates below hub #5
  AND

  3 Device under test is correctly identified by Device Manager and no yellow exclamation point is shown for any device

- Fail

  1 Device under test does not enumerate below hub #5
  OR

  2 Driver blue screens during enumeration
  OR

  3 Device under test is incorrectly identified by Device Manager or a device is flagged as not operational (yellow exclamation point)
  OR

  4 (If cable is not captive) Device cannot enumerate using a 5 meter cable

22. Interoperability
Run each individual device in Gold Tree.
Check that device under test functions while other devices are operating.

- View live video from the Veo camera. [Note: At the time of this writing, high-speed isochronous devices are not able to operate correctly in conjunction with interrupt transport devices on a full-speed bus.]
- Transfer a large file between the Maxtor drive and the JumpDrive Pro
- Operate the device under test
- Strike keys on the Logitech keyboard
- Disconnect and reconnect the Logitech mouse in the same port on Hub FS3
- Move the Logitech Mouse

- Pass

  1 Device under test operates as expected
  AND

  2 Gold Tree devices all operate

- Fail

  1 Device under test fails to operate
  OR

  2 One or more Gold Tree devices fail to operate

Microchip Ex. 1021, p. 75
Microchip v. Aptiv
IPR2024-00494

23. Hot Detach & Reattach
    - Stop DUT operation!
    - Detach and reattach device under test to same hub port.
    - Test functionality of device under test only.
    - Pass
        1 Device under test operates as expected
    - Fail
        1 Device under test fails to operate as expected

24. Topology Change
    - Stop DUT operation!
    - Detach and reattach device under test to port 3 on Hub FS3
    - Test functionality of device under test only.
    - Pass
        1 Device under test operates as expected
    - Fail
        1 Device under test fails to operate as expected

    RETURN THE DUT TO HUB HS5 BEFORE PROCEEDING!

25. Warm boot
    - Restart system through the start menu (Start -> Shutdown -> Restart).
    - Test functionality of device under test after system reboots.
    - Pass
        1 Device under test operates as expected
    - Fail
        1 Device under test fails to operate as expected

26. Cold boot
    - Restart system through the start menu (Start -> Shutdown -> Shutdown)
    - Turn PC back on
    - Test functionality of device under test after system reboots.
    - Pass
        1 Device under test operates as expected
    - Fail
        1 Device under test fails to operate as expected

Microchip Ex. 1021, p. 76
Microchip v. Aptiv
IPR2024-00494

27. Active S1 Suspend

To enable S1 suspend, enable remote wake-up on a USB device. IF THE DEVICE UNDER TEST SUPPORTS REMOTE WAKE-UP, ENABLE IT. Otherwise, enable remote wakeup on the USB Logitech mouse.

While device under test is actively operating, suspend the system. (Use the "Sleep" button on the Logitech USB keyboard.) System is placed in standby.

Note: Verify that the system's fans are still running during suspend -- this is an S1 sleep state. If the fans are not running, then the system is in S3 and the test is not valid.

Note: If the system does not go into standby, then a message must appear saying that the active DUT will not allow suspend to occur.

- Pass
  1. System suspends
     OR
  2. System notifies user that the system cannot go into suspend
- Fail
  1. The system does not enter suspend without notification
     OR
  2. System blue screens / locks up

28. Active S1 Resume (Applicable only if system is suspended)

If the device under test supports remote wake-up, use it to resume the system; otherwise, simply wake the system. Upon resuming, verify that the active operation initiated in the previous step continues without error.

NOTE: If the device under test supports remote wake-up and the system resumes using the device, then this test supercedes remote wakeup errors reported by USBCV.

- Pass
  1. System resumes
     AND
  2. Active operation initiated in previous step continues without error
- Fail
  1. System does not resume
     OR
  2. System blue screens / locks up
     OR
  3. Device under test is not functional or does not continue operation in the previous step

Microchip Ex. 1021, p. 77
Microchip v. Aptiv
IPR2024-00494

29. Inactive S1 Suspend

While device under test is idle, suspend the system. (Use the "Sleep" button on the Logitech USB keyboard.) System is placed in standby. Verify that the system's fans are still running.

- Pass
  1. System suspends
- Fail
  1. The system does not enter suspend
     OR
  2. System blue screens / locks up

30. Inactive S1 Resume

If the device under test supports remote wake-up, use it to resume the system; otherwise, simply wake the system. Upon resuming, verify that the DUT is able to operate.

NOTE: If the device under test supports remote wake-up and the system resumes using the device, then this test supercedes remote wakeup errors reported by USBCV.

- Pass
  1. System resumes
     AND
  2. Device under test operates without error
- Fail
  1. System does not resume
     OR
  2. System blue screens / locks up
     OR
  3. Device under test is not functional

31. Active S3 Suspend

To enable S3 suspend, disable remote wake-up on all USB devices.

While device under test is in active operation, suspend the system. (Use the "Sleep" button on the Logitech USB keyboard.) System is placed in standby.

Note: Verify that the system's fans are not running during suspend -- this is an S3 sleep state. If the fans are running, then the system is in S1 and the test is not valid.

Note: If the system does not go into standby, then a message must appear saying that the active DUT will not allow suspend to occur.

Microchip Ex. 1021, p. 78
Microchip v. Aptiv
IPR2024-00494

- Pass
  1. System suspends
     OR
  2. System notifies user that the system cannot go into suspend
- Fail
  1. The system does not enter suspend without notification
     OR
  2. System blue screens / locks up

32. Active S3 Resume (Applicable only if system is suspended)

    Wake the system. Upon resuming, verify that the active operation initiated in the previous step continues without error.

- Pass
  1. System resumes
     AND
  2. Active operation initiated in previous step continues without error
- Fail
  1. System does not resume
     OR
  2. System blue screens / locks up
     OR
  3. Device under test is not functional or does not continue operation in the previous step

Microchip Ex. 1021, p. 79
Microchip v. Aptiv
IPR2024-00494

33. Switch Testing to OHCI

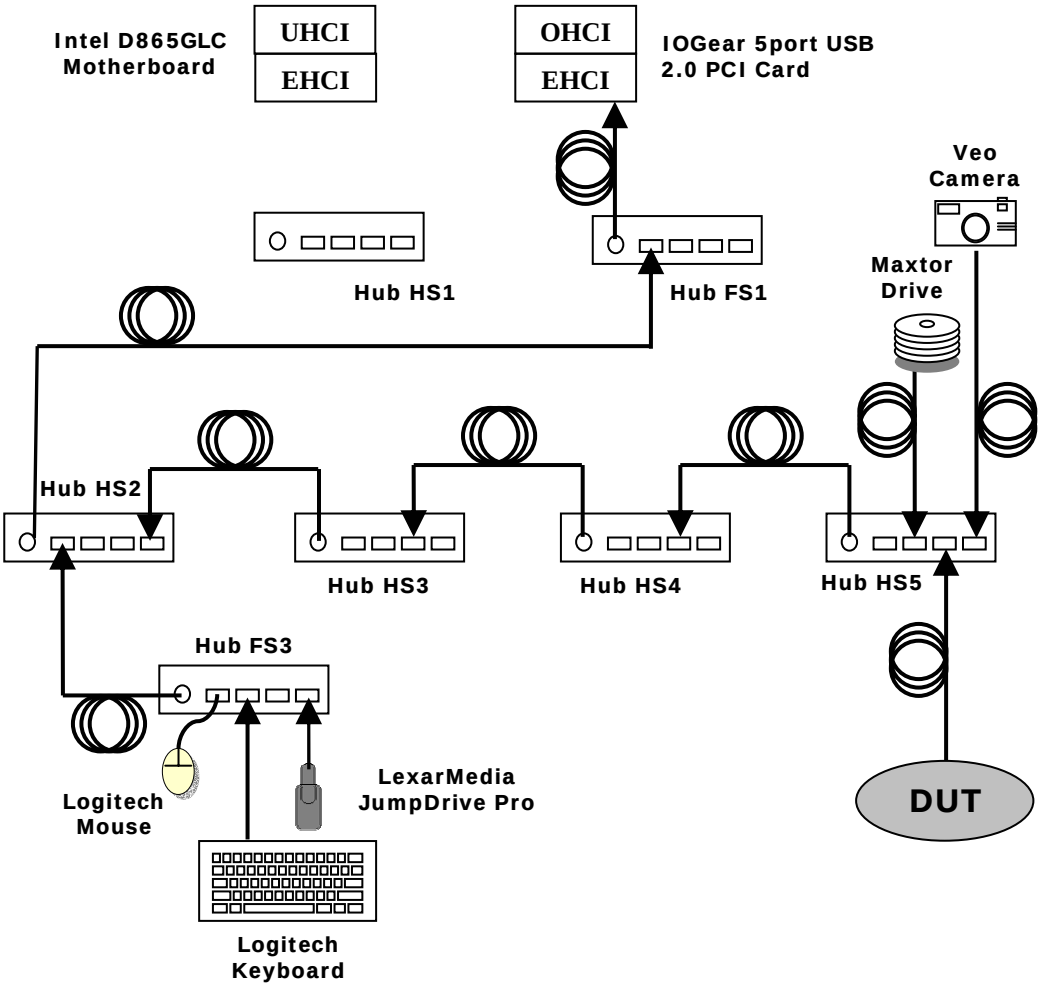

Figure D-5 OHCI Test Configuration

- Connect Hub FS1 to the USB PCI adapter
- Connect Hub HS2 to port #1 on Hub FS1

Microchip Ex. 1021, p. 80
Microchip v. Aptiv
IPR2024-00494

34. Enumerate device under test below hub #5 with the 5-meter cable if cable not captive

- Pass

  1 Device enumerates with a 5 meter cable (if cable is not captive)
  AND

  2 Device enumerates below hub #5
  AND

  3 Device under test is correctly identified by Device Manager and no yellow exclamation point is shown for any device

- Fail

  1 Device under test does not enumerate below hub #5
  OR

  2 Driver blue screens during enumeration
  OR

  3 Device under test is incorrectly identified by Device Manager or a device is flagged as not operational (yellow exclamation point)
  OR

  4 (If cable is not captive) Device cannot enumerate using a 5 meter cable

35. Interoperability
Run each individual device in Gold Tree.
Check that device under test functions while other devices are operating.

- View live video from the Veo camera
- Transfer a large file between the Maxtor drive and the JumpDrive Pro
- Operate the device under test
- Strike keys on the Logitech keyboard
- Disconnect and reconnect the Logitech mouse in the same port on Hub FS3
- Move the Logitech Mouse

- Pass

  1 Device under test operates as expected
  AND

  2 Gold Tree devices all operate

- Fail

  1 Device under test fails to operate
  OR

  2 One or more Gold Tree devices fail to operate

Microchip Ex. 1021, p. 81
Microchip v. Aptiv
IPR2024-00494

36. Hot Detach & Reattach
    - Stop DUT operation!
    - Detach and reattach device under test to same hub port.
    - Test functionality of device under test only.
    - Pass
        1 Device under test operates as expected
    - Fail
        1 Device under test fails to operate as expected

37. Topology Change
    - Stop Device operation!
    - Detach and reattach device under test to port 3 on Hub FS3
    - Test functionality of device under test only.
    - Pass
        1 Device under test operates as expected
    - Fail
        1 Device under test fails to operate as expected

    RETURN THE DUT TO HUB HS5 BEFORE PROCEEDING!

38. Warm boot
    - Restart system through the start menu (Start -> Shutdown -> Restart).
    - Test functionality of device under test after system reboots.
    - Pass
        1 Device under test operates as expected
    - Fail
        1 Device under test fails to operate as expected

39. Cold boot
    - Restart system through the start menu (Start -> Shutdown -> Shutdown)
    - Turn PC back on
    - Test functionality of device under test after system reboots.
    - Pass
        1 Device under test operates as expected
    - Fail
        1 Device under test fails to operate as expected

Microchip Ex. 1021, p. 82
Microchip v. Aptiv
IPR2024-00494

40. Active S1 Suspend

To enable S1 suspend, enable remote wake-up on a USB device. IF THE DEVICE UNDER TEST SUPPORTS REMOTE WAKE-UP, ENABLE IT. Otherwise, enable remote wakeup on the USB Logitech mouse.

While device under test is actively operating, suspend the system. (Use the "Sleep" button on the Logitech USB keyboard.) System is placed in standby.

Note: Verify that the system's fans are still running during suspend -- this is an S1 sleep state. If the fans are not running, then the system is in S3 and the test is not valid.

Note: If the system does not go into standby, then a message must appear saying that the active DUT will not allow suspend to occur.

- Pass
  1. System suspends
     OR
  2. System notifies user that the system cannot go into suspend
- Fail
  1. The system does not enter suspend without notification
     OR
  2. System blue screens / locks up

41. Active S1 Resume (Applicable only if system is suspended)

If the device under test supports remote wake-up, use it to resume the system; otherwise, simply wake the system. Upon resuming, verify that the active operation initiated in the previous step continues without error.

NOTE: If the device under test supports remote wake-up and the system resumes using the device, then this test supercedes remote wakeup errors reported by USBCV.

- Pass
  1. System resumes
     AND
  2. Active operation initiated in previous step continues without error
- Fail
  1. System does not resume
     OR
  2. System blue screens / locks up
     OR
  3. Device under test is not functional or does not continue operation in the previous step

Microchip Ex. 1021, p. 83
Microchip v. Aptiv
IPR2024-00494

42. Inactive S1 Suspend

While device under test is idle, suspend the system. (Use the "Sleep" button on the Logitech USB keyboard.) System is placed in standby. Verify that the system's fans are still running.

- Pass
  1. System suspends
- Fail
  1. The system does not enter suspend
     OR
  2. System blue screens / locks up

43. Inactive S1 Resume

If the device under test supports remote wake-up, use it to resume the system; otherwise, simply wake the system. Upon resuming, verify that the DUT is able to operate.

NOTE: If the device under test supports remote wake-up and the system resumes using the device, then this test supercedes remote wakeup errors reported by USBCV.

- Pass
  1. System resumes
     AND
  2. Device under test operates without error
- Fail
  1. System does not resume
     OR
  2. System blue screens / locks up
     OR
  3. Device under test is not functional

44. Active S3 Suspend

To enable S3 suspend, disable remote wake-up on all USB devices.

While device under test is in active operation, suspend the system. (Use the "Sleep" button on the Logitech USB keyboard.) System is placed in standby.

Note: Verify that the system's fans are not running during suspend -- this is an S3 sleep state. If the fans are running, then the system is in S1 and the test is not valid.

Note: If the system does not go into standby, then a message must appear saying that the active DUT will not allow suspend to occur.

- Pass
  1. System suspends
     OR
  2. System notifies user that the system cannot go into suspend

Microchip Ex. 1021, p. 84
Microchip v. Aptiv
IPR2024-00494

- Fail
  1. The system does not enter suspend without notification
     OR
  2. System blue screens / locks up

45. Active S3 Resume (Applicable only if system is suspended)

    Wake the system. Upon resuming, verify that the active operation initiated in the previous step continues without error.

- Pass
  1. System resumes
     AND
  2. Active operation initiated in previous step continues without error

- Fail
  1. System does not resume
     OR
  2. System blue screens / locks up
     OR
  3. Device under test is not functional or does not continue operation in the previous step

Microchip Ex. 1021, p. 85
Microchip v. Aptiv
IPR2024-00494

46. Switch Testing to USB PCI Adapter EHCI

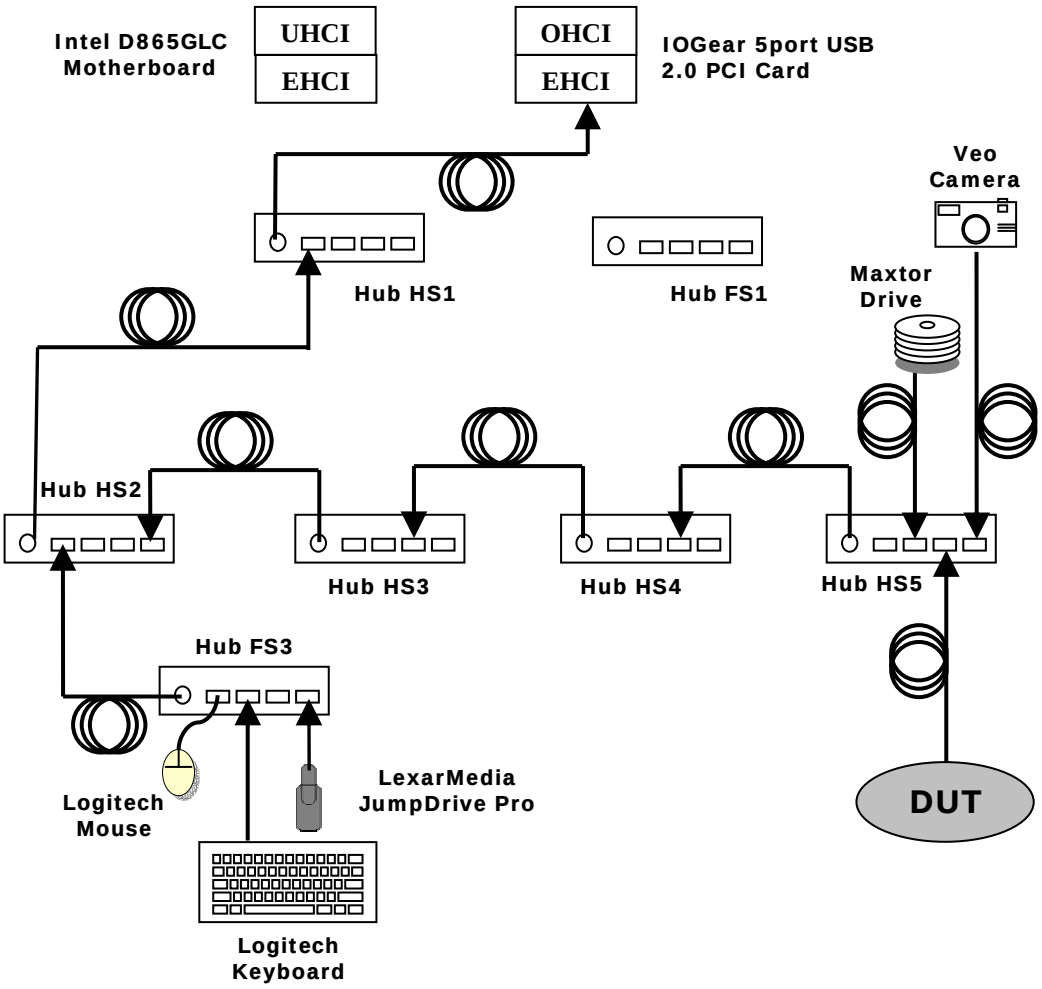

Figure D-6 PCI Adapter EHCI Test Configuration

- Connect Hub HS1 to a root port on the USB PCI Adapter
- Connect Hub HS2 to port #1 of Hub HS1

Microchip Ex. 1021, p. 86
Microchip v. Aptiv
IPR2024-00494

47. Enumerate device under test below hub #5. Use a 5-meter cable unless the device under test has a captive cable

- Pass

  1 Device enumerates with a 5 meter cable (if cable is not captive)
  AND

  2 Device enumerates below hub #5
  AND

  3 Device under test is correctly identified by Device Manager and no yellow exclamation point is shown for any device

- Fail

  1 Device under test does not enumerate below hub #5
  OR

  2 Driver blue screens during enumeration
  OR

  3 Device under test is incorrectly identified by Device Manager or a device is flagged as not operational (yellow exclamation point)
  OR

  4 (If cable is not captive) Device cannot enumerate using a 5 meter cable

48. Active S3 Suspend

To enable S3 suspend, disable remote wake-up on all USB devices.

While device under test is in active operation, suspend the system. (Use the "Sleep" button on the Logitech USB keyboard.) System is placed in standby. WAIT AT LEAST 20 SECONDS BEFORE RESUMING! This is to allow VBus time to decay to near 0V.

Note: Verify that the system's fans are not running during suspend -- this is an S3 sleep state. If the fans are running, then the system is in S1 and the test is not valid.

Note: If the system does not go into standby, then a message must appear saying that the active DUT will not allow suspend to occur.

- Pass

  1 System suspends
  OR

  2 System notifies user that the system cannot go into suspend

- Fail

  1 The system does not enter suspend without notification
  OR

  2 System blue screens / locks up

Microchip Ex. 1021, p. 87
Microchip v. Aptiv
IPR2024-00494

49. Active S3 Resume (Applicable only if system is suspended)

    Wake the system. Upon resuming, verify that the active operation initiated in the previous step continues without error.

- Pass

  1 System resumes
  AND
  2 Active operation initiated in previous step continues without error

- Fail

  1 System does not resume
  OR
  2 System blue screens / locks up
  OR
  3 Device under test is not functional or does not continue operation in the previous step

Microchip Ex. 1021, p. 88
Microchip v. Aptiv
IPR2024-00494

D.5.2 Hub Interoperability

All hubs must pass the Hub Interoperability tests. Self-powered hubs must also pass the self-powered hub tests; bus-powered hubs must also pass the bus-powered hub tests. Hubs that operate in both bus- and self-powered modes must pass all three tests.

Should the device under test contain embedded devices, each embedded device must pass D.5.1 Device Interoperability test.

Hubs may be standalone allowing additional devices to be attached to the USB. Hubs may also be incorporated into devices in a variety of ways. Compound devices are hubs that have devices permanently attached to one or more of its unexposed ports. These devices may, in turn, be hubs themselves.

Hubs may be nested to a maximum of 5 levels, not including the root port. Understanding this limitation determines where in the USB gold tree a hub may be attached.

The theory is to add the hub under test to the highest supported tier level in the gold tree. No hub may be connected to Hub HS5 – only tier 4 or lower. If the hub under test has any exposed ports, then the gold tree devices on equal or higher level gold tree hubs are moved to the ports on the hub under test.

D.5.2.1 Hub Configurations

Hubs under test may come in a variety of configurations. A standard hub will have no embedded devices permanently attached to its downstream ports.

A compound device will have a hub with embedded devices permanently attached to one or more of its downstream ports. The unused ports may or may not be exposed for use by the user. Compound devices will be tested as a hub and each embedded device on its downstream port will be tested as a standard device.

Standard hubs or compound hubs with permanently attached devices will always connect to the high-speed branch on Hub HS 4 so that they are tested at tier level 5. Should a compound hub contain an embedded hub on one of its ports, then that hub under test will connect to Hub HS3 so that its embedded hub will be tested at tier level 5. Similar tier level connections on the full-speed branch will be tested as well.

This document cannot cover all possible configurations and combinations of hubs and embedded devices. Test guidelines for unique devices that do not fall into categories outlined in this document should be brought to the attention of TechAdmin@usb.org for clarification.

Samples of expected hub configurations are noted in the following figures.

Microchip Ex. 1021, p. 89
Microchip v. Aptiv
IPR2024-00494

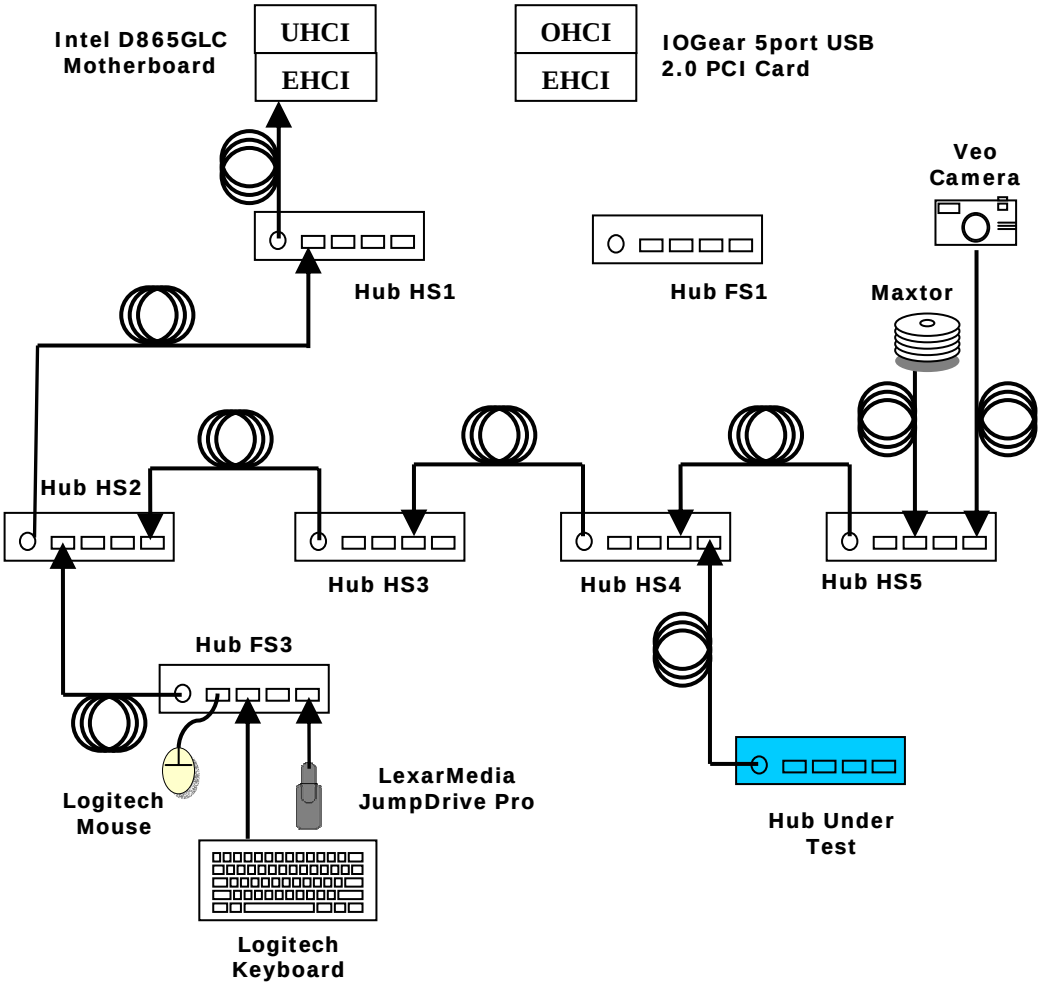

Figure D-7 Standard Hub Placement

Microchip Ex. 1021, p. 90
Microchip v. Aptiv
IPR2024-00494

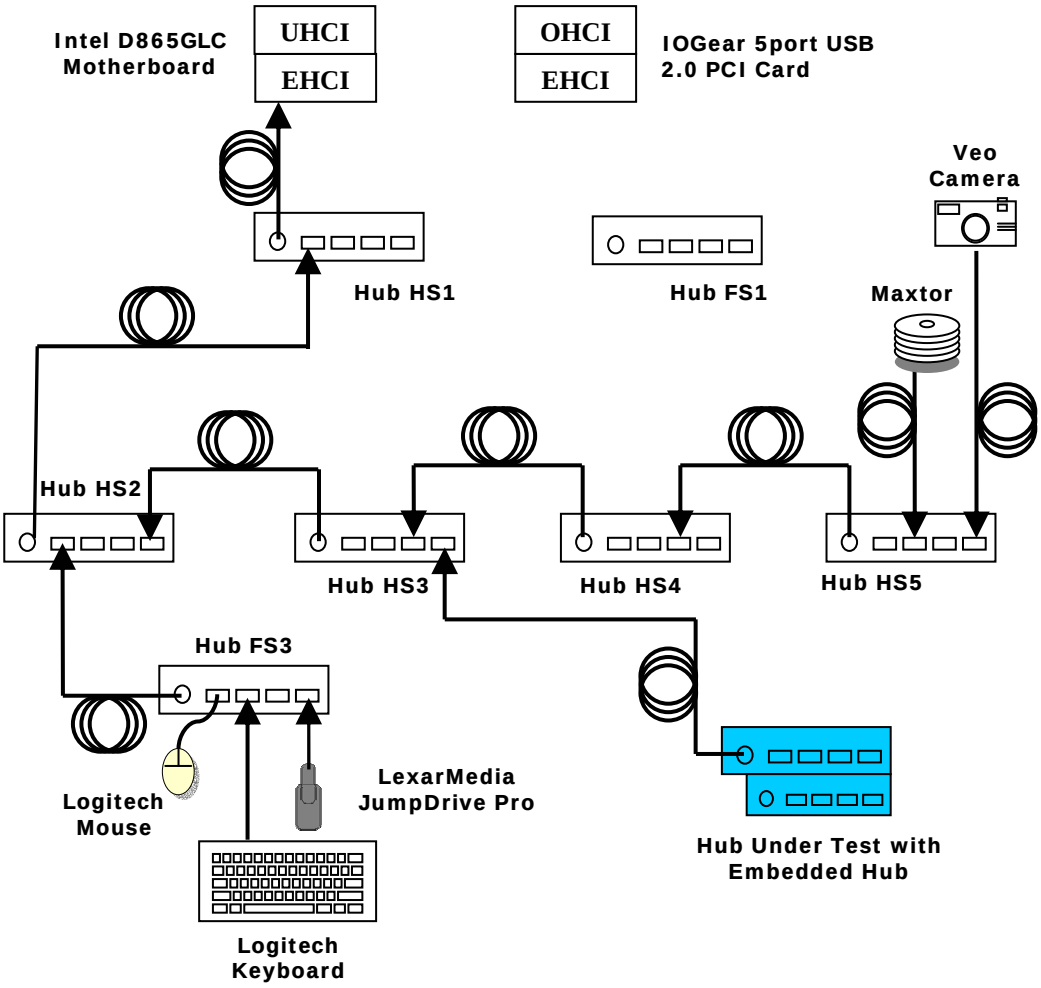

Figure D-8: Hub with Embedded Hub

Microchip Ex. 1021, p. 91
Microchip v. Aptiv
IPR2024-00494

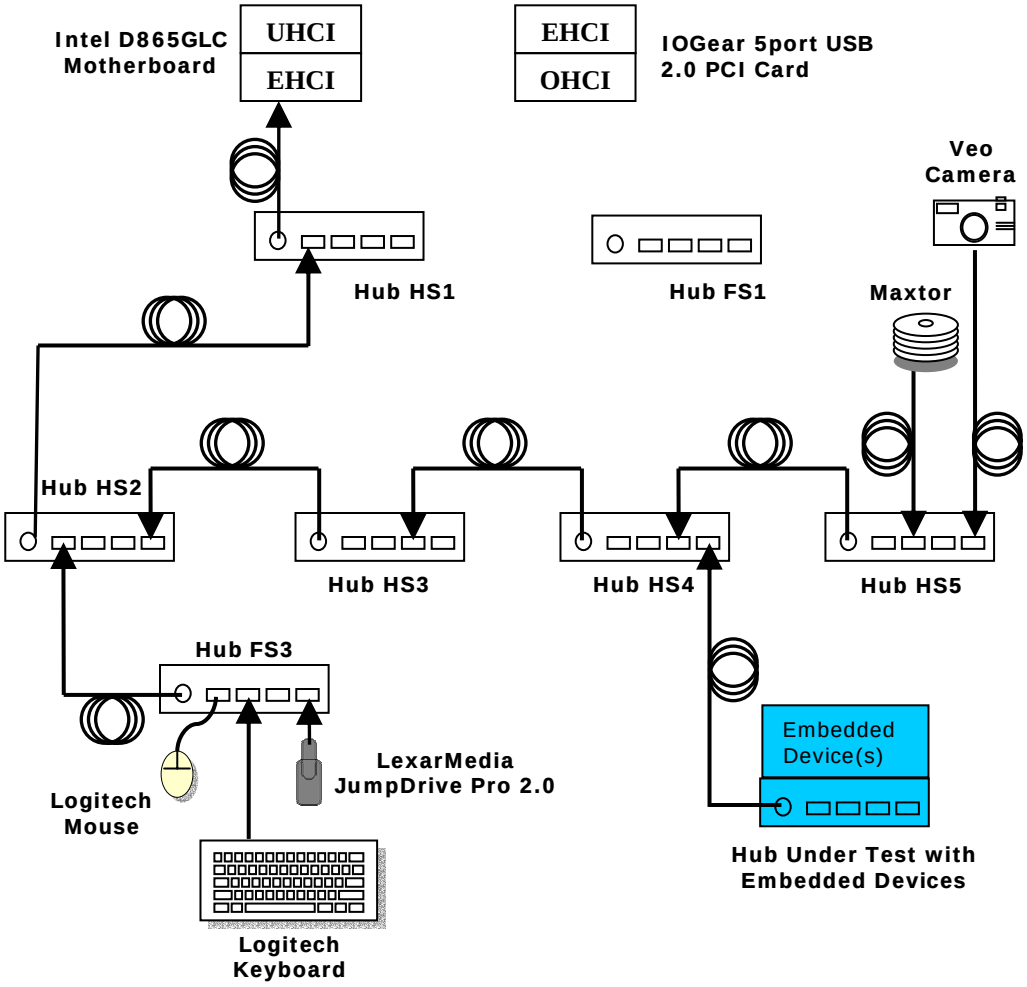

Figure D-9 Hub with Embedded Device(s)

Microchip Ex. 1021, p. 92
Microchip v. Aptiv
IPR2024-00494

D.5.2.2 Self-Powered Hub Tests

10. Attach Hub HS1 to a root port on the motherboard. (Do not use a front panel port if it does not directly connect to the motherboard.) Attach the gold tree, via Hub HS2, to Hub HS1.

11. Enumerate Hub: If the hub under test has no embedded hubs:
    - Connect hub under test to Hub HS4 with 5 meter cable (Please see Figure D-7 Standard Hub Placement)

      Otherwise, if hub has an embedded hub:
    - Connect hub under test to Hub HS3 with a 5 meter cable (Please see Figure D-8: Hub with Embedded Hub)

    - Pass

      1 Hub under test enumerates with the 5 meter cable

      AND

      2 Hub under test does not require a reboot

      AND

      3 Hub under test is correctly identified by Device Manager

    - Fail

      1 Hub under test requires reboot (and is not a networking device)

      OR

      2 Hub under test is incorrectly identified by Device Manager (for example, such as “Unknown Device” or “Other Device” or yellow exclamation point)

      OR

      3 Hub under test does not enumerate

      OR

      4 Hub cannot enumerate with 5 meter cable

Microchip Ex. 1021, p. 93
Microchip v. Aptiv
IPR2024-00494

12. Enumerate Devices: If the hub has exposed ports, move devices that are connected to Hub HS5 to the Hub Under Test. If hub under test has an embedded hub, move Hub HS5 to first tier of hub under test if at all possible.

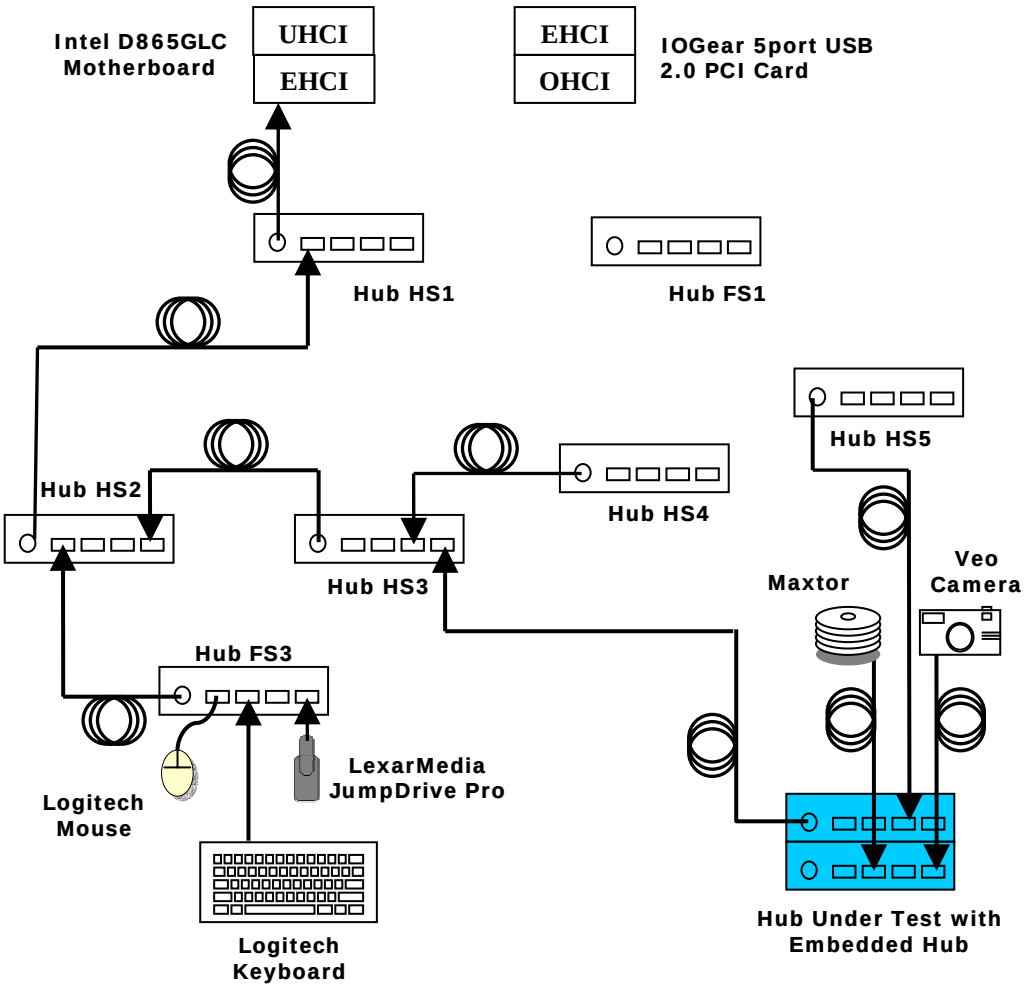

Figure D-10 Move Devices to Hub with Embedded Hub Under Test

Otherwise, move devices that were connected to hub #5 to hub under test

Microchip Ex. 1021, p. 94
Microchip v. Aptiv
IPR2024-00494

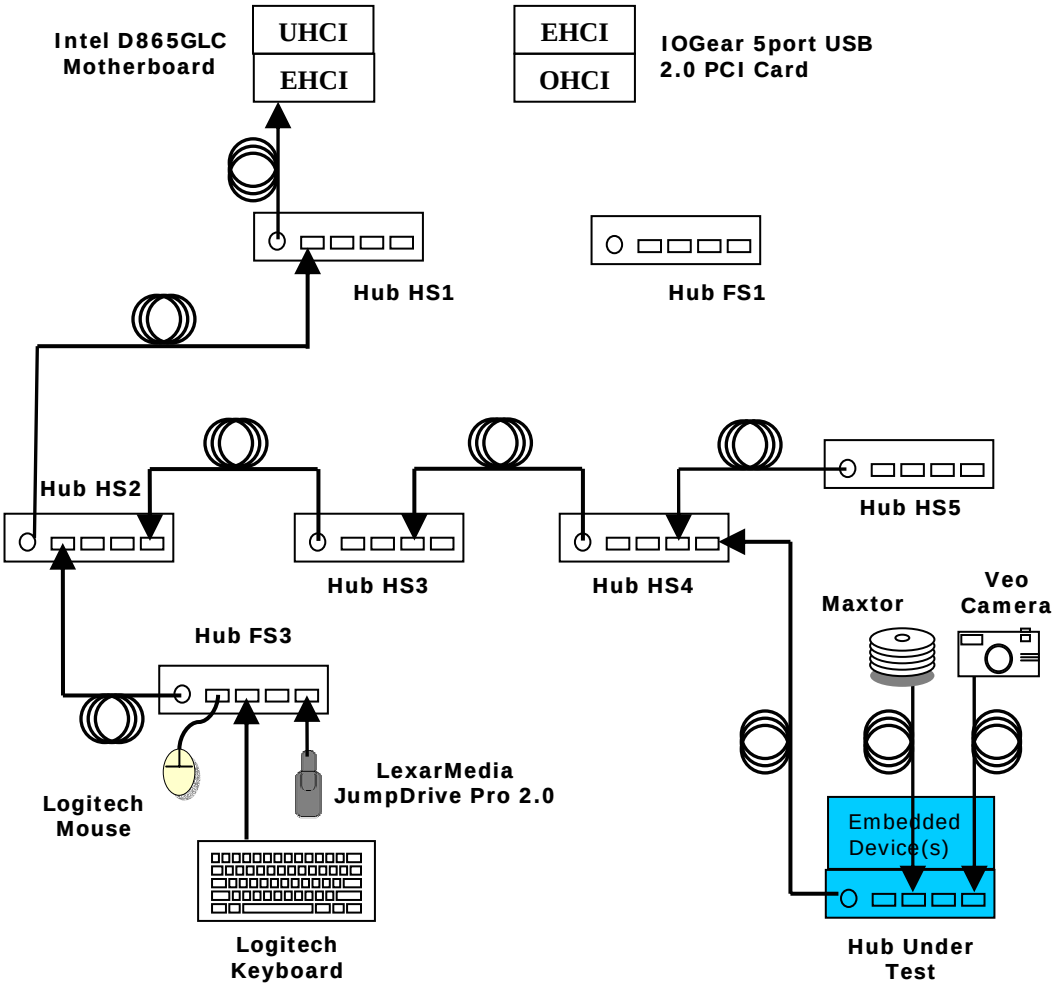

Figure D-11 Hub with Embedded Device (and exposed ports)

- Pass

  1 Any embedded devices enumerate as well as the gold tree devices

  OR

  2 Hub under test or embedded devices or gold tree devices are correctly identified by Device Manager with no yellow exclamation points

- Fail

  1 Embedded devices or gold tree devices do not enumerate

  OR

  2 Hub under test or embedded devices or gold tree devices are incorrectly identified by Device Manager (for example, such as “Unknown Device” or “Other Device” or yellow exclamation point)

  3 Blue screen / locks up / system crash

Microchip Ex. 1021, p. 95
Microchip v. Aptiv
IPR2024-00494

13. Interoperability: Follow the Device Interoperability procedure in section D.5.1 for all embedded devices. If there are no embedded devices, conduct the test on the HUT with the gold devices attached.
    - For steps Topology Change and Hot Attach, move the hub under test and hot attach the hub under test. Do not perform these tests on embedded/attached devices.
    - Active Suspend applies only to embedded devices. If there no embedded devices, only perform Inactive Suspend tests.

    - Pass

      1 Every device operates as expected

    - Fail

      1 One or more device does not operate as expected
      OR
      2 Blue screen / locks up / system crash

Microchip Ex. 1021, p. 96
Microchip v. Aptiv
IPR2024-00494

D.5.2.3 Bus-Powered Hub Tests

14. Enumerate Hub: Connect with the 5 meter cable Hub Under Test To HS3.

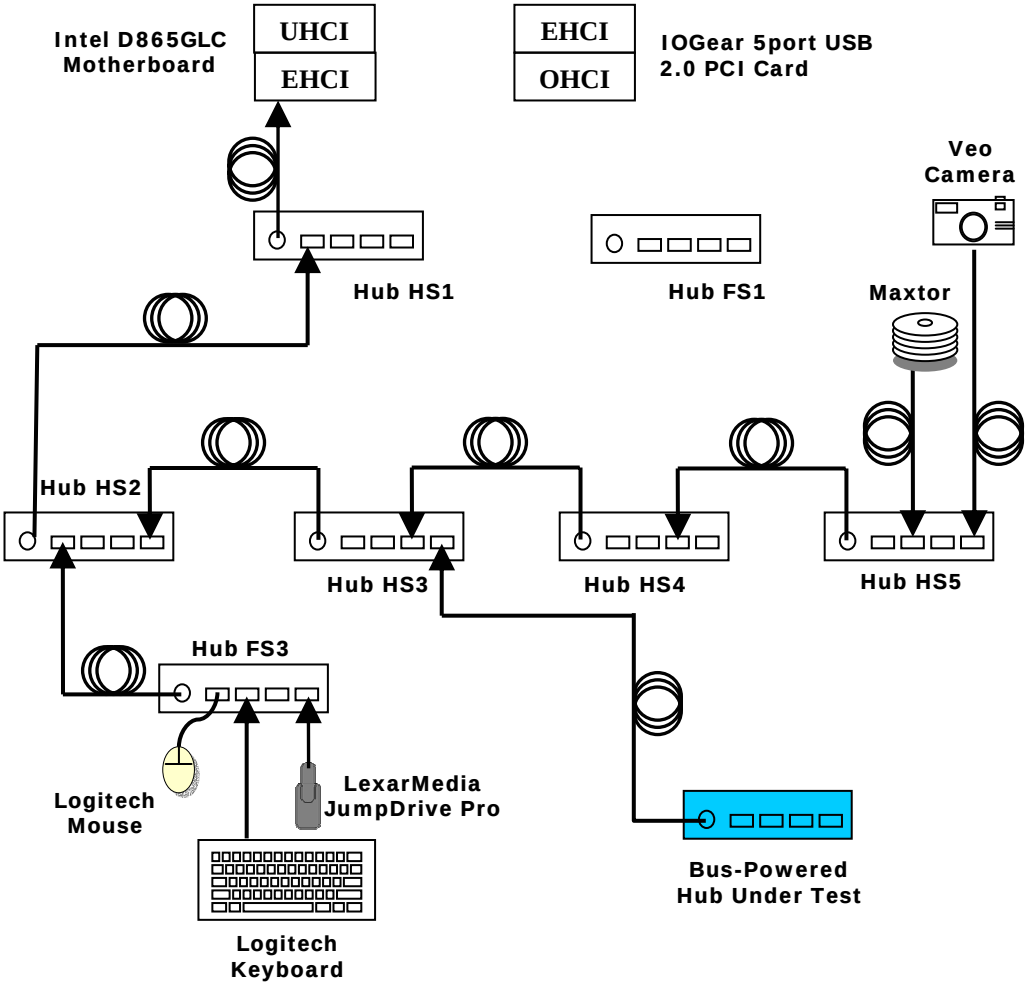

Figure D-12: Bus-powered Hub Interoperability

- Pass

1	Hub under test enumerates with the 5 meter cable AND
2	Hub under test enumerates below hub #3 AND
3	Hub under test does not require a reboot AND
4	Hub under test is correctly identified by Device Manager

Microchip Ex. 1021, p. 97
Microchip v. Aptiv
IPR2024-00494

- Fail

1 Hub under test requires reboot (and is not a networking device)
OR

2 Hub under test is incorrectly identified by Device Manager (for example, such as “Unknown Device” or “Other Device”)
OR

3 Hub under test does not enumerate below hub #3
OR

4 Hub cannot enumerate with 5 meter cable

15. Enumerate Devices: Disconnect HS5 from HS4 and attach it to HUT.

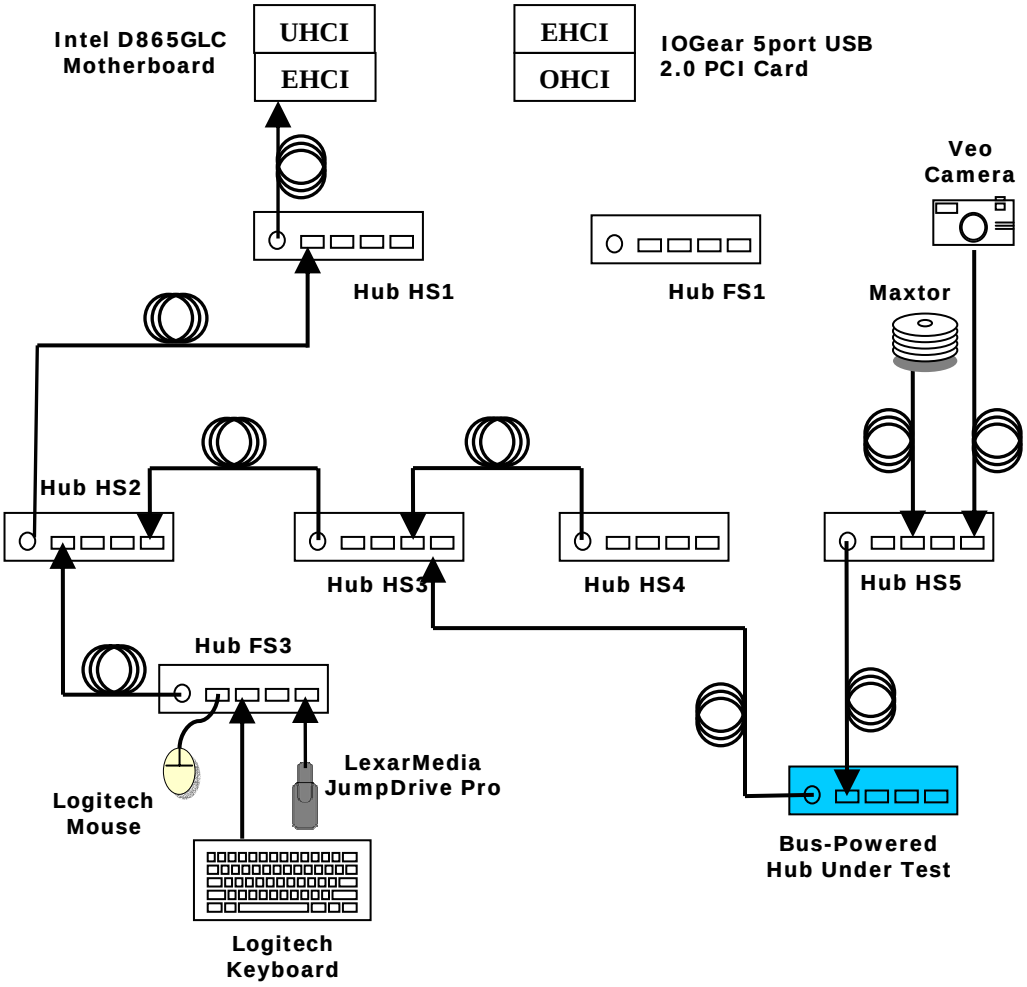

Figure D-13: Add Hub HS5 with Devices to Bus-Powered Hub Under Test

Microchip Ex. 1021, p. 98
Microchip v. Aptiv
IPR2024-00494

- Pass
  1 All devices enumerate properly
- Fail
  1 One or more device does not enumerate
  OR
  2 Blue screen / locks up / system crash

16. Interoperability: Follow the Device Interoperability procedure in section D.5.1 for all embedded devices. If there are no embedded devices, conduct the test on all gold devices attached to the hub.
    - For steps Topology Change and Hot Attach, move the hub under test and hot attach the hub under test. Do not perform these tests on embedded/attached devices.
    - Active Suspend apply only to embedded devices. If there no embedded devices, only perform Inactive Suspend tests.

- Pass
  1 Every device operates as expected
- Fail
  17. 1 One or more device does not operate as expected
  OR
  18. 2 Blue screen / locks up / system crash

Microchip Ex. 1021, p. 99
Microchip v. Aptiv
IPR2024-00494

D.6 Measuring Average Current Draw

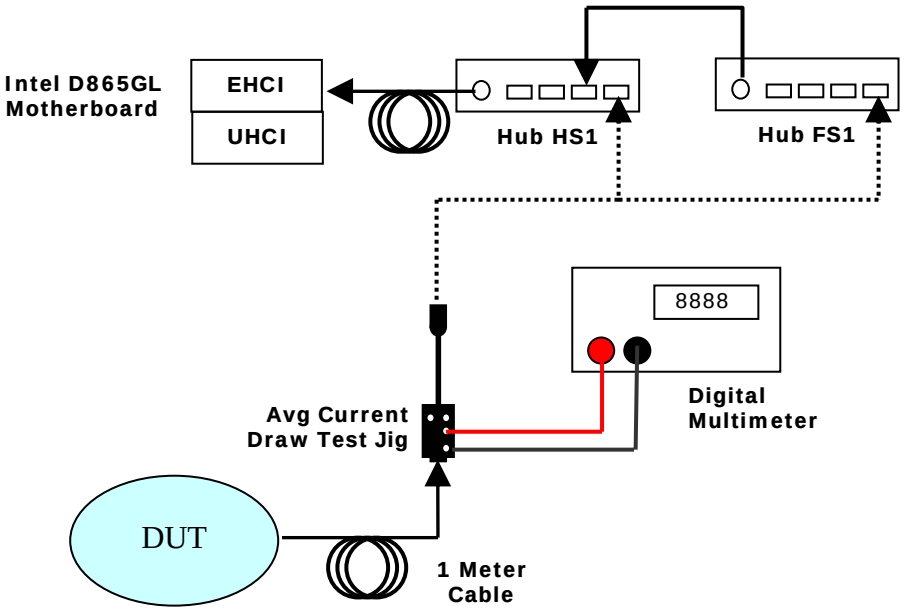

Figure D-14: Average Current Measurement

1. Measure current under maximum operating conditions
   - Operate the device, verify that it is functioning normally
   - determine its worse case power draw (LEDs turned on, buttons activated, major functions operating, etc…)
   - measure its worse case power draw, record the average current shown on the multimeter as 'operating current' in milliamps
   - High Speed Devices must have operating current measured during high speed operation as well as full speed operation.

   - Pass

     1 measured current is less than its MaxPower value
     Low-power devices: mA < MaxPower ≤100mA
     Self powered device: mA < MaxPower ≤100mA
     High-power devices: mA < MaxPower ≤500mA

   - Fail

     1 measured current exceeds its MaxPower value

2. Measure current when device is suspended
   - If the device under test supports remote wakeup, enable it.
   - Suspend system via Windows Start →Shut Down→Stand By
   - If embedded function prevents suspend, stop operation of embedded function and repeat previous step.

Microchip Ex. 1021, p. 100
Microchip v. Aptiv
IPR2024-00494

- record the average current shown on the multimeter as 'suspend current' in microamps
- High Speed Devices must have suspend current measured with a high speed connection as well as a full speed connection.

- Pass

  1 measured current is 500 μA or less
  OR

  2 device is configured for high-power
  AND
  device is enabled as a remote wakeup device
  AND
  measured current is 2.5 mA or less

- Fail

  1 measured current exceeds 500 μA
  AND
  device is configured for operation with low-power
  OR

  2 measured current exceeds 2.5 mA

Microchip Ex. 1021, p. 101
Microchip v. Aptiv
IPR2024-00494

D.7 Reporting Results

D.7.1 Interoperability Results

Device Interoperability Test Results

1. Device Overall PASS/FAIL

EHCI

1. Enumeration and Driver Installation: PASS/FAIL
2. Operation with Default Driver PASS/FAIL
3. Update Driver PASS/FAIL/NA
4. Install Additional Software PASS/FAIL/NA
5. DUT Demonstrates Operation PASS/FAIL/NA
6. Operating Speed
7. Interoperability PASS/FAIL
8. Hot Attach & Reattach: PASS/FAIL
9. Topology Change: PASS/FAIL
10. Warm Reboot: PASS/FAIL
11. Cold Reboot: PASS/FAIL
12. Active S1 Suspend: PASS/FAIL
13. Active S1 Resume: PASS/FAIL
14. InActive S1 Suspend: PASS/FAIL
15. InActive S1 Resume: PASS/FAIL
16. Active S3 Suspend: PASS/FAIL
17. Active S3 Resume: PASS/FAIL

UHCI

1. Enumeration PASS/FAIL
2. Interoperability - Mouse Enumeration Test: PASS/FAIL
3. Hot Attach & Reattach: PASS/FAIL
4. Topology Change: PASS/FAIL
5. Warm Reboot: PASS/FAIL

Microchip Ex. 1021, p. 102
Microchip v. Aptiv
IPR2024-00494

6. Cold Reboot: PASS/FAIL
7. Active S1 Suspend: PASS/FAIL
8. Active S1 Resume: PASS/FAIL
9. InActive S1 Suspend: PASS/FAIL
10. InActive S1 Resume: PASS/FAIL
11. Active S3 Suspend: PASS/FAIL
12. Active S3 Resume: PASS/FAIL

OHCI

1. Enumeration PASS/FAIL
2. Interoperability - Mouse Enumeration Test: PASS/FAIL
3. Hot Attach & Reattach: PASS/FAIL
4. Topology Change: PASS/FAIL
5. Warm Reboot: PASS/FAIL
6. Cold Reboot: PASS/FAIL
7. Active S1 Suspend: PASS/FAIL
8. Active S1 Resume: PASS/FAIL
9. InActive S1 Suspend: PASS/FAIL
10. InActive S1 Resume: PASS/FAIL
11. Active S3 Suspend: PASS/FAIL
12. Active S3 Resume: PASS/FAIL

EHCI (PCI Adapter)

1. Enumeration PASS/FAIL
2. Active S3 Suspend: PASS/FAIL
3. Active S3 Resume: PASS/FAIL

Microchip Ex. 1021, p. 103
Microchip v. Aptiv
IPR2024-00494

Hub Results

1. Hub Overall: PASS/FAIL
2. Self-powered – Enumerate Hub: PASS/FAIL
3. Self-powered – Enumerate Devices PASS/FAIL
4. Self-powered –Interoperability PASS/FAIL
5. Overall Bus-powered Hub Results: PASS/FAIL/NA
6. Bus-powered-Enumerate Hub: PASS/FAIL/NA
7. Bus-powered-Enumerate Devices: PASS/FAIL/NA
8. Bus-powered- Interoperability: PASS/FAIL/NA
9. Interoperability Comments: [text]

Current Measurement Results

High Speed

1. Operating Current PASS/FAIL
2. Suspend Current PASS/FAIL

Full Speed

3. Operating Current PASS/FAIL
4. Suspend Current PASS/FAIL

Microchip Ex. 1021, p. 104
Microchip v. Aptiv
IPR2024-00494

E Windows 2000 or Windows XP Host Interoperability Testing

Interoperability uses the USB-IF gold tree peripherals as described in Section D of this document. The Gold Tree consists of the following devices:

Item	Description / Model	Qty
USB mouse	Logitech mouse P/N 830524-0000 or equivalent	1
USB Keyboard	Logitech Internet Navigator Model:Y-BF37 RT7R25 Part: 867224-0100	1
HS Bulk USB Flash Media	LexarMedia JumpDrive Pro 2.0	1
FS Hub (Self-powered)	Belkin F5U100 / F5U101	2
HS Isochronous PC Camera	Veo Velocity Connect	1
HS Bulk USB Drive	Maxtor 3000 LE	1
HS Hub (Self-powered)	American Power Conversion (APC) 19500SG-1G USB 2.0 4-port Hub OR IOGEAR GUH224 USB 2.0 High Speed 4-port Hub	4
Multi-Transaction Translator Hub	Belkin TetraHub F5U231	1
five meter USB cables	any listed on USB-IF Cables and Connectors Integrators List	12

The Gold Tree consists of a high-speed tree and a full-speed tree. Please note, however, that system testing requires the gold tree to be configured differently from peripheral testing. In peripheral testing, the full-speed tree is connected to the high-speed tree. In system testing, each tree is connected directly to a root port of the system. Please refer to the diagram on the following page.

NOTE: To avoid test failure due to other unrelated causes, please install any required platform-specific drivers – all devices should be 'working properly'; there should be no 'unknown devices' shown in the Windows Device Manager.

Interoperability verifies the host controller's ability to enumerate and operate high-speed and full-speed devices concurrently. All devices of the gold tree must enumerate and function as expected. That means the host controller must handle interrupt, bulk, and isochronous traffic concurrently. In addition, the host controller must handle the transfer of data between high-speed and full-speed devices.

The system must be able to properly handle ACPI suspend and resume with all the gold tree devices. Each and every supported ACPI standby state must be tested including hibernation. Thus, if the system/motherboard supports S1, S3 and S4, all three ACPI standby modes must be tested. In order to enter the desired Sx state, it may be necessary to enable the desired ACPI state within the BIOS before each test.

Remote wakeup support, if supported, must be tested in each of the Sx states.

Microchip Ex. 1021, p. 105
Microchip v. Aptiv
IPR2024-00494

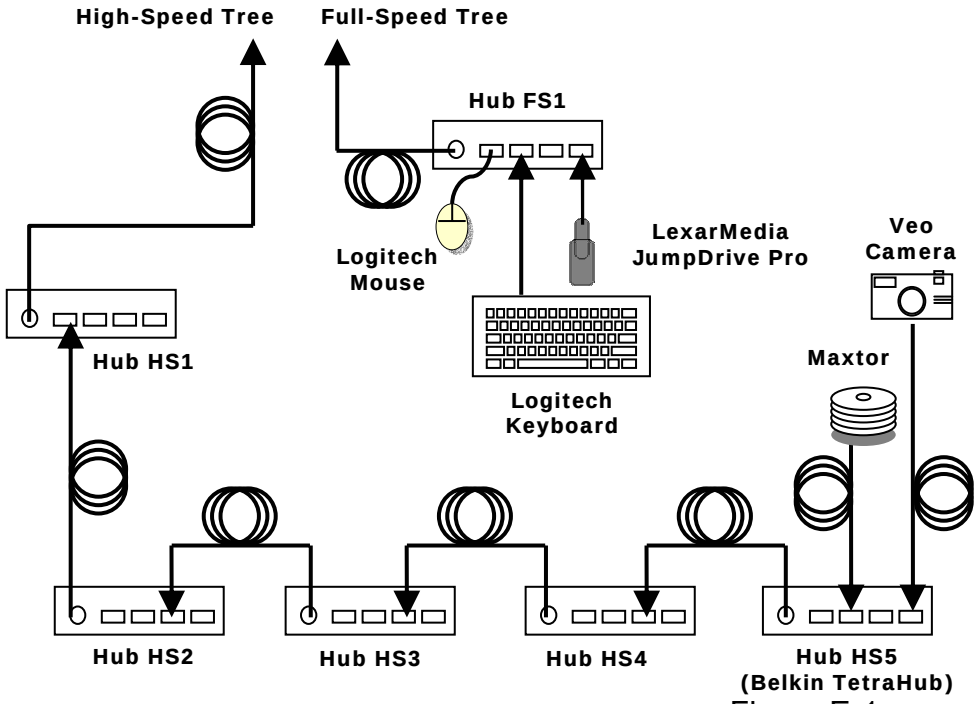

Gold Tree Test Configuration

The gold tree consists of a high-speed tree and a full-speed tree. Each tree is connected directly to a root port. To avoid unnecessary duplication, the full interoperability test is only required to be performed once in each of the supported configurations:

1. both trees connected between two back panel ports;
2. a tree connected to a front panel port and the other tree connected to a back panel port;
3. both trees connected between two front panel ports.

This applies to desktop system/motherboards. In the case of notebooks, all user accessible ports must be tested, but only once.

E.1.1 Functionality Procedure

The following procedure must be used to verify the functionality of all USB devices. All steps should be done concurrently wherever possible. All devices should operate as expected without error.

1. View live video from the Veo Camera
2. Transfer a large file between the Maxtor drive and the LexarMedia JumpDrive Pro
3. Move the mouse and observe cursor movement
4. Press the 'Windows' key on the keyboard and observe "Start" window.

All devices must operate as expected without error.

Microchip Ex. 1021, p. 106
Microchip v. Aptiv
IPR2024-00494

E.1.2 S0 Interoperability

Construct an interoperability 'tree' as shown in the above diagram.

1. Connect the gold trees to root ports under test using a 5 m cable. From Windows Device Manager, verify the USB Enhanced Host Controller and its associated USB2.0 Root Hub is present and are not crossed out or shown with a yellow exclamation point. Verify that all hubs and devices are shown without a yellow exclamation point.

- Pass

  1 Host controller enumerates
  AND
  2 Driver loaded
  AND
  3 Host Controller correctly identified by Device Manager
  AND
  4 All devices enumerate
  AND
  5 All devices correctly identified by Device Manager

- Fail

  1 Blue Screen
  OR
  2 System Hang
  OR
  3 Host Controller or one or more devices incorrectly identified by Device Manager

2. Perform the Functionality Procedure as described in section E.1.1

- Pass

  1 All devices function as expected

- Fail

  1 Any devices fails to function as expected
  OR
  2 Blue Screen, System Hang or System Crash

3. Perform a Windows shutdown to power off (not Restart). Turn on the system from off and verify all USB peripherals are accounted for in Windows Device Manager. Missing peripherals, yellow exclamation points, Windows hang or blue screen is considered test failure.

- Pass

  1 All devices correctly identified by Device Manager

- Fail

  1 Host Controller or one or more devices incorrectly identified by Device Manager
  OR
  2 Blue Screen, System Hang or System Crash

Microchip Ex. 1021, p. 107
Microchip v. Aptiv
IPR2024-00494

4. Perform the Functionality Procedure as described in section E.1.1

- Pass

  1 All devices function as expected

- Fail

  1 Any devices fails to function as expected
  OR
  2 Blue Screen, System Hang or System Crash

5. Perform a Windows shutdown to Restart (not power off). Allow the system to reboot itself. Verify all USB peripherals are accounted for in Windows Device Manager. Missing peripherals, yellow exclamation points, Windows hang or blue screen is considered test failure.

- Pass

  1 All devices correctly identified by Device Manager

- Fail

  1 Host Controller or one or more devices incorrectly identified by Device Manager
  OR
  2 Blue Screen, System Hang or System Crash

6. Perform the Functionality Procedure as described in section E.1.1

- Pass

  1 All devices function as expected

- Fail

  1 Any devices fails to function as expected
  OR
  2 Blue Screen, System Hang or System Crash

Microchip Ex. 1021, p. 108
Microchip v. Aptiv
IPR2024-00494

E.1.3 S1 Interoperability

1 Enable S1 ACPI state within the BIOS and disable other sleep states.

2 Double-click the Logitech Mouse in the Device Manager to bring up the Properties applet. Select the Power Management tab and check 'Allow this device to bring the computer out of standby'.

3 Begin a large file transfer between the Maxtor drive and the LexarMedia JumpDrive Pro.

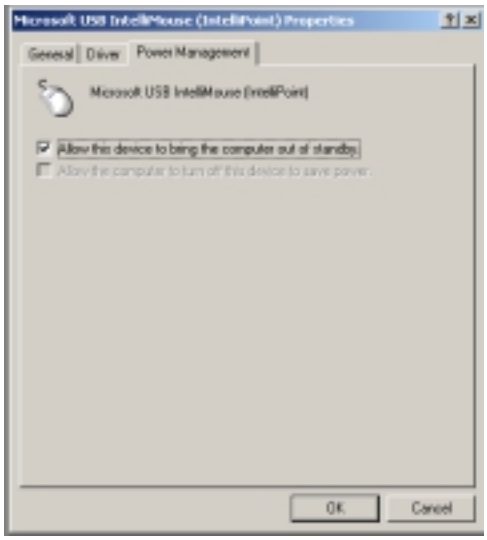

Enable Mouse for Wakeup

4. While the file transfer is in progress, select Standby from Windows Start → Shut Down → Standby option or other equivalent means. Verify the system enters S1 standby. The monitor (display) should turn off but the system fans will continue to spin.

5. Wait a few seconds and then resume the system by performing a left-click of the USB Logitech mouse connected to the first hub. The system should resume. Verify all USB peripherals are accounted for in Windows Device Manager. Missing peripherals, yellow exclamation points, Windows hang or blue screen is considered test failure. The file transfer initiated in step 3 must continue without error.

   - Pass

     1 All devices correctly identified by Device Manager

   - Fail

     1 Host Controller or one or more devices incorrectly identified by Device Manager
     OR
     2 Blue Screen, System Hang or System Crash

6. Perform the Functionality Procedure as described in section E.1.1

   - Pass

     1 All devices function as expected

   - Fail

     1 Any devices fails to function as expected
     OR
     2 Blue Screen, System Hang or System Crash

Microchip Ex. 1021, p. 109
Microchip v. Aptiv
IPR2024-00494

E.1.4 S3 Interoperability

1. Please set up the system standby mode to enter S3 (this is usually a BIOS setup option). If the system/motherboard does not support S3, go to section E.1.5 S4 Interoperability.
2. Begin a large file transfer between the Maxtor drive and the LexarMedia JumpDrive Pro.
3. Select Standby from Windows Start → Shut Down → Standby option or other equivalent means. Verify the system enters S1 standby. The monitor (display) should turns off and the system hard drive spins down to a stop (verify there is no sound emitting from the drive). The system fans should turn off as well.
4. Wait a few seconds and then resume the system by performing a left-click of the USB mouse connected to the first hub. The system should resume. Verify all USB peripherals are accounted for in Windows Device Manager. Missing peripherals, yellow exclamation points, Windows hang or blue screen is considered test failure. The file transfer initiated in step 2 must continue without error.
   - Pass
     1 All devices correctly identified by Device Manager
   - Fail
     1 Host Controller or one or more devices incorrectly identified by Device Manager
     OR
     2 Blue Screen, System Hang or System Crash
5. Perform the Functionality Procedure as described in section E.1.1
   - Pass
     1 All devices function as expected
   - Fail
     1 Any devices fails to function as expected
     OR
     2 Blue Screen, System Hang or System Crash
6. Double click the Logitech Mouse in Windows Device Manager to bring up the Properties applet. Select the Power Management tab and un-check 'Allow this device to bring the computer out of standby'.

Microchip Ex. 1021, p. 110
Microchip v. Aptiv
IPR2024-00494

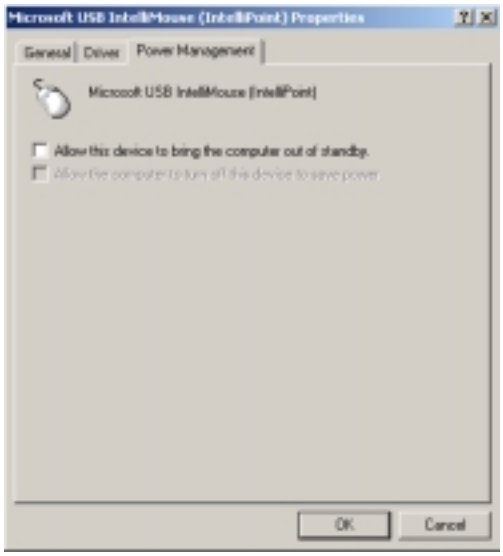

Disable Mouse for Wakeup

7. Begin a large file transfer between the Maxtor drive and the LexarMedia JumpDrive Pro.
8. Select Standby from Windows Start → Shut Down → Standby option or other equivalent means. Verify the system enters S3 standby. The monitor (display) should turns off and the system hard drive spins down to a stop (verify there is no sound emitting from the drive). The system fans should turn off as well.
9. Wait a few seconds and then resume the system by pressing the space bar of the keyboard. The system should resume. Verify all USB peripherals are accounted for in Windows Device Manager. Missing peripherals, yellow exclamation points, Windows hang or blue screen is considered test failure. The file transfer initiated in step 7 must continue without error.
   - Pass
     1 All devices correctly identified by Device Manager
   - Fail
     1 Host Controller or one or more devices incorrectly identified by Device Manager
     OR
     2 Blue Screen, System Hang or System Crash

10. Perform the Functionality Procedure as described in section E.1.1
   - Pass
     1 All devices function as expected
   - Fail
     1 Any devices fails to function as expected
     OR
     2 Blue Screen, System Hang or System Crash

Microchip Ex. 1021, p. 111
Microchip v. Aptiv
IPR2024-00494

E.1.5 S4 Interoperability

1. Begin a large file transfer between the Maxtor drive and the LexarMedia JumpDrive Pro.
2. Select Hibernate from Windows Start → Shut Down → 'H' key option or other equivalent means. Verify the system enters hibernation. The entire system should power down once the system state has been save to disk.
3. Wait a few seconds and power on the system. Verify all USB peripherals are accounted for in Windows Device Manager. Missing peripherals, yellow exclamation points, Windows hang or blue screen is considered test failure. The file transfer initiated in step 1 must continue without error.
   - Pass
     1. All devices correctly identified by Device Manager
   - Fail
     1. Host Controller or one or more devices incorrectly identified by Device Manager
        OR
     2. Blue Screen, System Hang or System Crash
4. Perform the Functionality Procedure as described in section E.1.1
   - Pass
     1. All devices function as expected
   - Fail
     1. Any devices fails to function as expected
        OR
     2. Blue Screen, System Hang or System Crash

Microchip Ex. 1021, p. 112
Microchip v. Aptiv
IPR2024-00494

F Back-voltage Testing

Section 7.2.1 of the USB specification requires that no device shall supply (source) current on VBUS at its upstream facing port at any time. From VBUS on its upstream facing port, a device may only draw (sink) current. They may not provide power to the pull-up resistor on D+/D- unless VBUS is present (see Section 7.1.5).

Devices/hubs that fail this requirement can cause upstream hubs and/or PCs to fail. Some of the failures that have been reported are:

- The PC fails to cold boot due to back-drive voltage effecting motherboard reset sequences.
- Hub fails to enumerate downstream devices due to reset anomalies.
- Motherboard failures to properly resume from suspend state.
- Introduction of device/hub knocks out one or more upstream devices.

F.1 Equipment Used

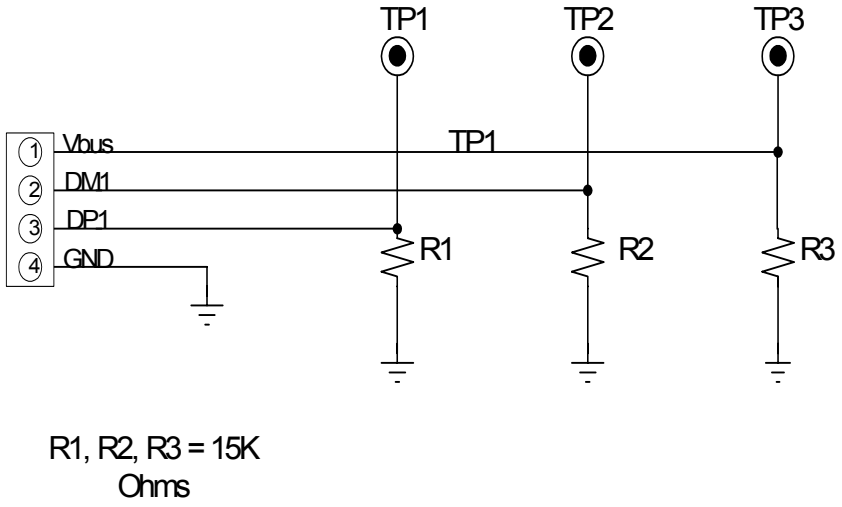

Figure 1: Back-voltage test fixture schematic

Microchip Ex. 1021, p. 113
Microchip v. Aptiv
IPR2024-00494

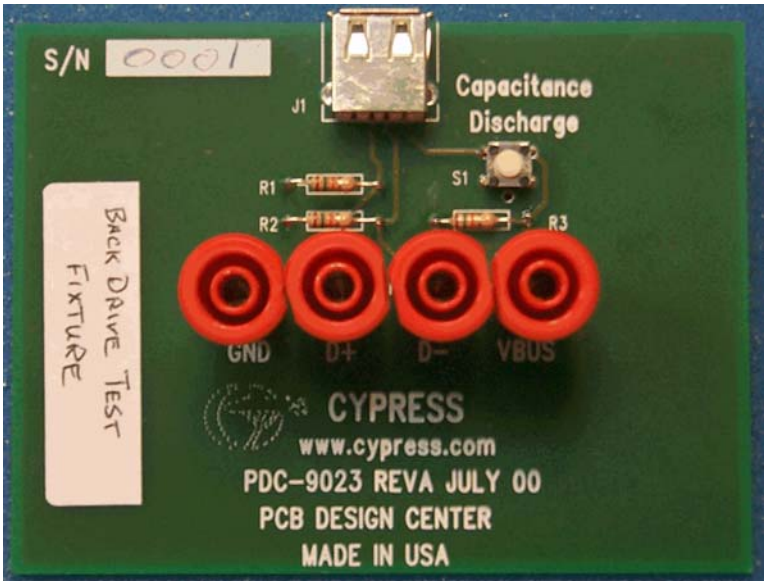

Figure 2: Back-voltage test fixture

F.2 Which Devices Must Perform the Back-voltage Test

All USB peripherals must perform the back-voltage test regardless if bus-powered or not.

Microchip Ex. 1021, p. 114
Microchip v. Aptiv
IPR2024-00494

F.3 Test Steps

Connect power supply to device/hub under test and connect the device/hub upstream port to the back-voltage test fixture using a known good USB cable. Measure and record DC voltages on Vbus, D+ and D-. Voltages should all be less than or equal to 400mV. Any voltages greater than 400mV are to be recorded as a failure.

Plug device/hub under test into a known good host. Verify proper enumeration. Unplug USB cable from the host. Reconnect the USB cable to the back-voltage test fixture. Measure and record the DC voltages of Vbus, D+ and D-. All voltages must be less than or equal to 400mV. Any voltages greater than 400mV are to be recorded as a failure.

	Column 1	Column 2	
USB pin	DC Voltage Before enumeration	DC Voltage after enumeration and removal	Expected Value (VDC)
Vbus			≤ 400mV
D+			≤ 400mV
D-			≤ 400mV

- ❑ Pass
- ❑ Fail

Comments:

Microchip Ex. 1021, p. 115
Microchip v. Aptiv
IPR2024-00494