US008694803B1

(12) **United States Patent**
Rafiee

(10) **Patent No.: US 8,694,803 B1**
(45) **Date of Patent: Apr. 8, 2014**

(54) **CONTROLLING POWER RECEIVED THROUGH MULTIPLE BUS INTERFACES IN A PORTABLE COMPUTING DEVICE**

(75) Inventor: **Mansour Rafiee**, San Jose, CA (US)

(73) Assignee: **Linear Technology Corporation**, Milpitas, CA (US)

(*) Notice: Subject to any disclaimer, the term of this patent is extended or adjusted under 35 U.S.C. 154(b) by 421 days.

(21) Appl. No.: **12/950,490**

(22) Filed: **Nov. 19, 2010**

Related U.S. Application Data

(60) Provisional application No. 61/292,660, filed on Jan. 6, 2010.

(51) **Int. Cl.**

G06F 1/26	(2006.01)
G06F 1/28	(2006.01)
G06F 11/30	(2006.01)
H02J 7/00	(2006.01)

(52) **U.S. Cl.**
USPC **713/300**; 713/330; 713/340; 455/572; 455/573; 455/574; 455/127.1; 455/127.5; 320/127; 320/128; 320/138

(58) **Field of Classification Search**
None
See application file for complete search history.

(56) **References Cited**

U.S. PATENT DOCUMENTS

2005/0245138	A1*	11/2005	Fischer et al.	439/638
2009/0079264	A1*	3/2009	Minami	307/44
2011/0167290	A1*	7/2011	Yoshimoto et al.	713/340

* cited by examiner

Primary Examiner — Tanh Nguyen
(74) *Attorney, Agent, or Firm* — McDermott Will & Emery LLP

(57) **ABSTRACT**

The disclosed embodiments provide a system that enables a portable computing device to receive power through multiple bus interfaces at the same time. When the system senses that a first power source is plugged into a first bus interface in the portable computing device, the system determines whether the first power source is a host or a power adapter. Next, based upon whether the first power source is a host or a power adapter, the system uses a first power manager coupled to the first bus interface to limit a first input current received from the first power source to power the computing device. The system also provides the maximum charging current to a rechargeable battery for the portable computing device by chaining together a second bus interface whether power is present on the second bus interface or not.

21 Claims, 5 Drawing Sheets

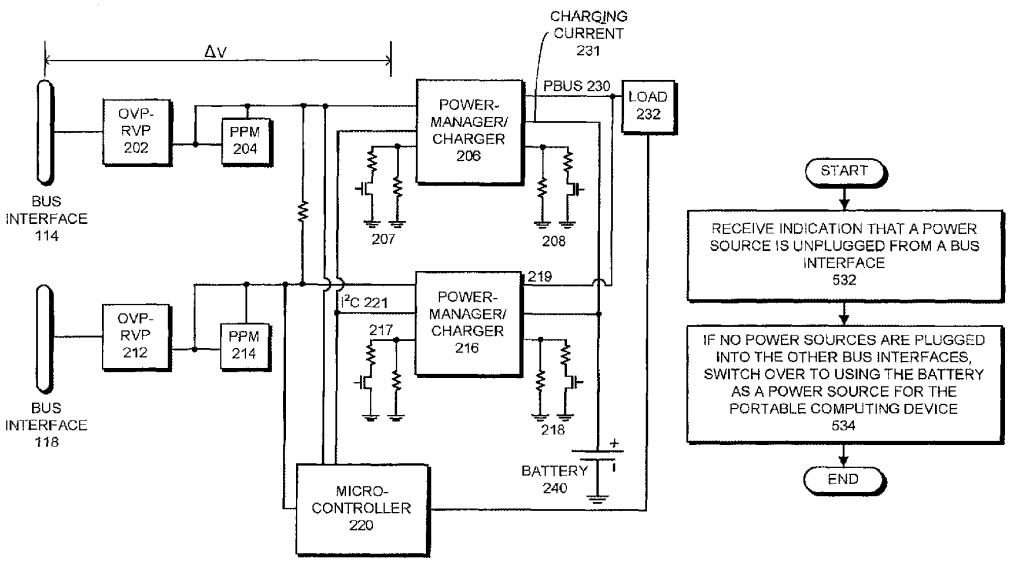

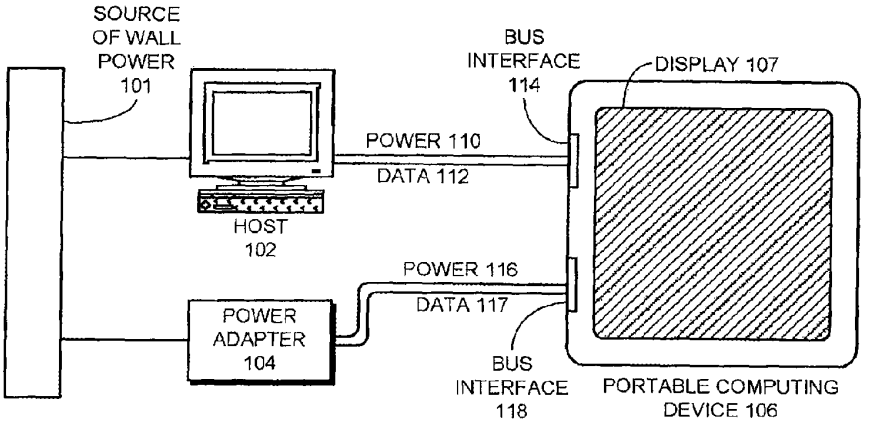
SOURCE
OF WALL
POWER
101
BUS
INTERFACE
114
DISPLAY 107
POWER 110
DATA 112
HOST
102
POWER 116
DATA 117
POWER
ADAPTER
104
BUS
INTERFACE
118
PORTABLE COMPUTING
DEVICE 106

FIG. 1

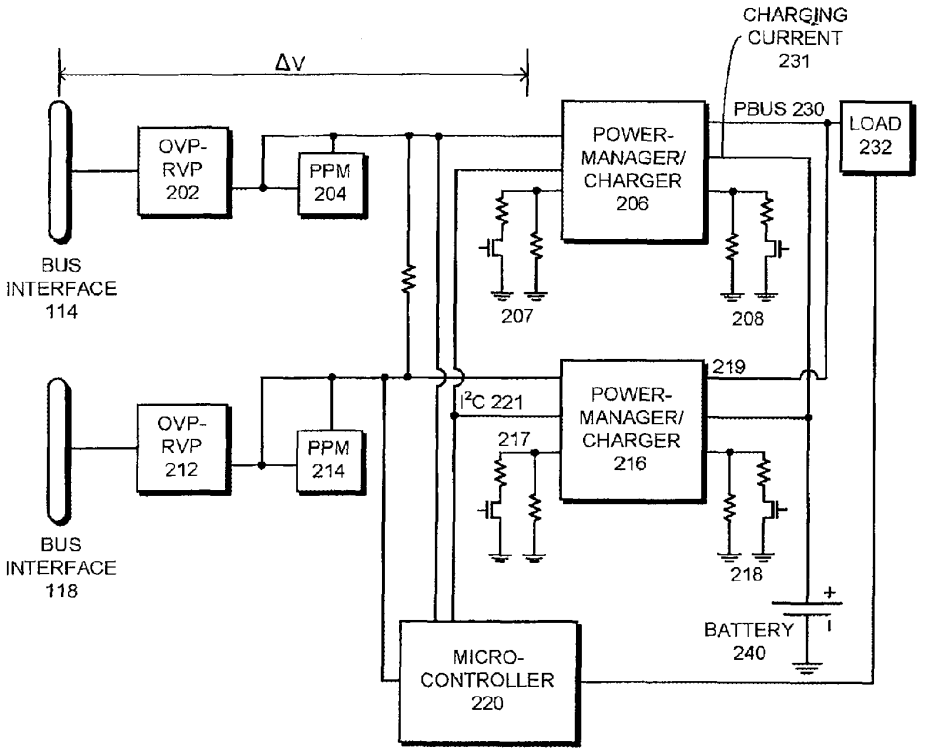
CHARGING
CURRENT
231
ΔV
PBUS 230
LOAD
232
OVP-
RVP
202
PPM
204
POWER-
MANAGER/
CHARGER
206
BUS
INTERFACE
114
207
208
219
I²C 221
POWER-
MANAGER/
CHARGER
216
OVP-
RVP
212
PPM
214
217
BUS
INTERFACE
118
218
BATTERY
240
MICRO-
CONTROLLER
220

FIG. 2

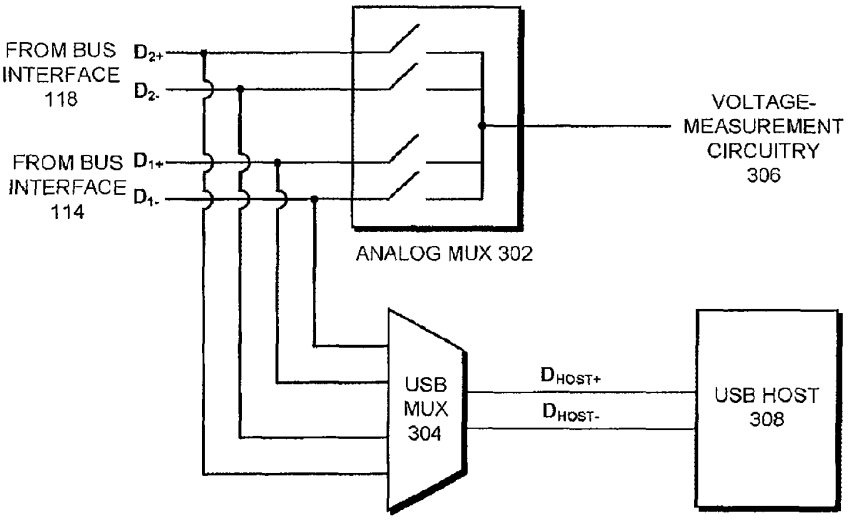
FROM BUS INTERFACE 118
D_{2+}
D_{2-}
FROM BUS INTERFACE 114
D_{1+}
D_{1-}
ANALOG MUX 302
VOLTAGE-MEASUREMENT CIRCUITRY 306
USB MUX 304
D_{HOST+}
D_{HOST-}
USB HOST 308

FIG. 3

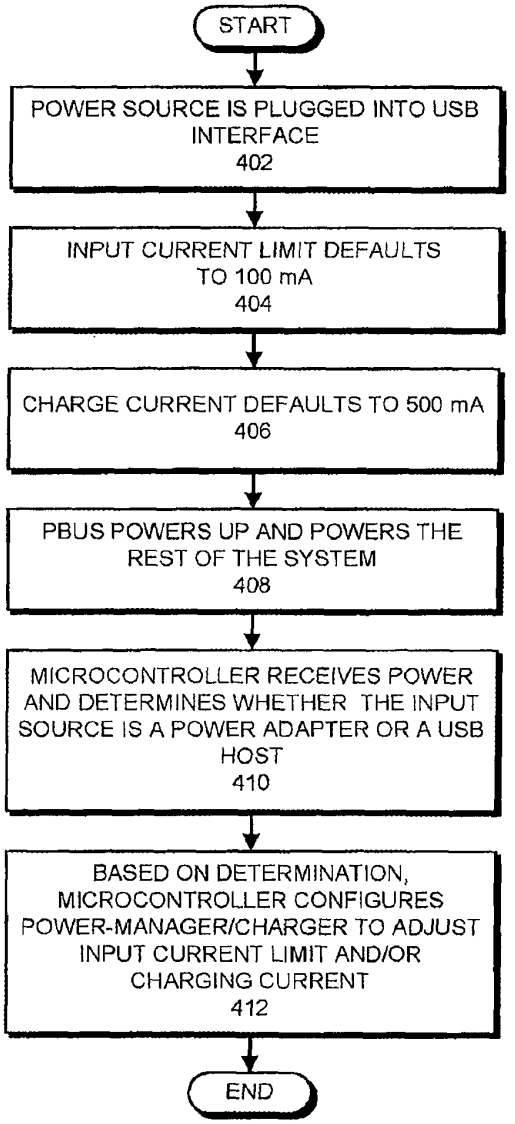
START
POWER SOURCE IS PLUGGED INTO USB INTERFACE
402
INPUT CURRENT LIMIT DEFAULTS TO 100 mA
404
CHARGE CURRENT DEFAULTS TO 500 mA
406
PBUS POWERS UP AND POWERS THE REST OF THE SYSTEM
408
MICROCONTROLLER RECEIVES POWER AND DETERMINES WHETHER THE INPUT SOURCE IS A POWER ADAPTER OR A USB HOST
410
BASED ON DETERMINATION, MICROCONTROLLER CONFIGURES POWER-MANAGER/CHARGER TO ADJUST INPUT CURRENT LIMIT AND/OR CHARGING CURRENT
412
END

FIG. 4

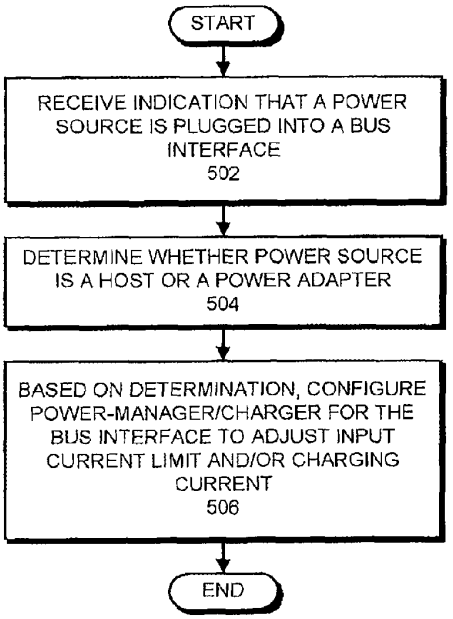

FIG. 5A

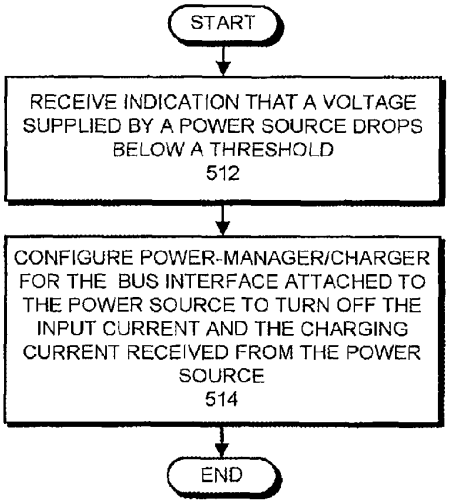

FIG. 5B

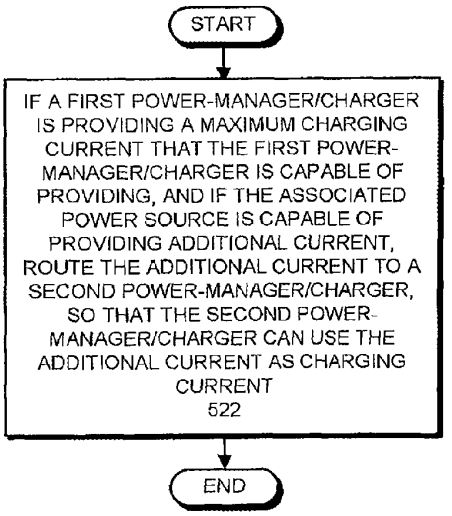

FIG. 5C

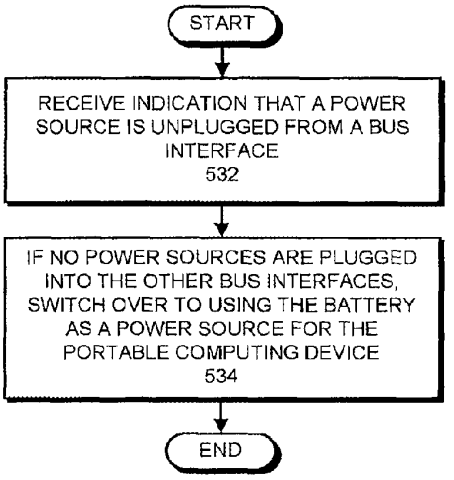

FIG. 5D

CONTROLLING POWER RECEIVED THROUGH MULTIPLE BUS INTERFACES IN A PORTABLE COMPUTING DEVICE

RELATED APPLICATION

This application hereby claims priority under 35 U.S.C. §119 to U.S. Provisional Patent Application No. 61/292,660 filed Jan. 6, 2010, entitled "Controlling Power Received Through Multiple Bus Interfaces in a Portable Computing Device," by inventors Mark Yoshimoto, Alex Crumlin and Mansour Rafiee. This application is also related to a pending U.S. patent application Ser. No. 12/901,969, entitled "Controlling Power Received through Multiple Bus Interfaces in a Portable Computing Device," by inventors Mark Yoshimoto and Alex Crumlin, filed on Oct. 11, 2010.

BACKGROUND

1. Field

The disclosed embodiments relate to techniques for providing power to computer systems. More specifically, the disclosed embodiments relate to a technique for controlling power received through multiple bus interfaces in a portable computing device.

2. Related Art

Recent improvements in computing power and wireless networking technology have significantly increased the capabilities of portable computing devices, such as laptops, tablet PCs, digital media players and smart phones. These portable computing devices typically include a number of bus interfaces, such as universal serial bus (USB) interfaces, which can be used to connect the portable computing device to various devices, such as non-volatile storage devices, I/O devices, networks, power adapters and even other computer systems. In fact, many portable computing devices can receive power through these bus interfaces, and this power can be used to operate the portable computing device and to charge a battery for the portable computing device. Unfortunately, the power which is received through a single bus interface is typically limited, either by the power source which is plugged into the bus interface, or by circuitry within the portable computing device that manages the power received through the bus interface.

Hence, what is needed is a method and an apparatus for receiving power through a bus interface of a portable computing device without the limitations of existing techniques.

SUMMARY

The disclosed embodiments provide a system that enables a portable computing device to receive power through multiple bus interfaces at the same time. When the system senses that a first power source is plugged into a first bus interface in the portable computing device, the system determines whether the first power source is a host or a power adapter. Next, based upon whether the first power source is a host or a power adapter, the system uses a first power manager coupled to the first bus interface to limit the first input current from the first power source to power the computing device, and also to selectively provide a first charging current to a rechargeable battery for the portable computing device.

Next, when the system senses that a second power source is plugged into a second bus interface in the portable computing device, the system determines whether the second power source is a host or a power adapter. Then, based upon whether the second power source is a host or a power adapter, the system uses a second power manager coupled to the second bus interface to limit the second input current from the second power source to power the computing device, and to selectively provide a second charging current to the rechargeable battery.

In some embodiments, if the voltage supplied by the first power source falls below a minimum threshold voltage, the system reduces the first input current received from the first power source.

In some embodiments, if the portable computing device is powered off, then when the first power source is plugged into the first bus interface, the first power manager supplies an initialization current to power up the portable computing device before a system controller in the portable computing device can determine whether the first power source is a host or a power adapter.

In some embodiments, if the first power manager is providing the maximum charging current that the first power manager is capable of providing to the rechargeable battery, and if the first power source is capable of providing additional current, the system routes the additional current to a second power manager associated with a second bus interface. This enables the second power manager to use the additional current as charging current to charge the rechargeable battery.

In some embodiments, if the first power source is a host, the system uses the first bus interface to facilitate communications between the first power source and the portable computing device, wherein the communications can take place while the first power source is supplying power to the portable computing device.

In some embodiments, upon sensing that the first power source becomes unplugged from the first bus interface, if no power sources are plugged into the other bus interfaces, the system switches over to using the rechargeable battery to provide power for the portable computing device.

In some embodiments, determining whether the first power source is a host or a power adapter involves measuring voltage signals on data lines from the first interface to determine whether the first power source is generating data signals. If the voltage signals indicate that the first power source is generating data signals, the system determines that the first power source is a host.

In some embodiments, the first bus interface can be a universal serial bus (USB) interface or a FireWire interface.

BRIEF DESCRIPTION OF THE FIGURES

FIG. **1** illustrates a portable computing device, which can receive power through multiple bus interfaces in accordance with the disclosed embodiments.

FIG. **2** illustrates power-management circuitry within the portable computing device in accordance with the disclosed embodiments.

FIG. **3** illustrates circuitry which is used to switch between data lines from the bus interfaces in accordance with the disclosed embodiments.

FIG. **4** presents a flow chart illustrating a power-up sequence for a portable computing device in accordance with the disclosed embodiments.

FIG. **5**A presents a flow chart illustrating how power is adjusted when a power source is plugged into a bus interface in the portable computing device in accordance with the disclosed embodiments.

FIG. **5**B presents a flow chart illustrating how power is adjusted when the voltage supplied by a power source drops below a minimum threshold voltage in accordance with the disclosed embodiments.

FIG. **5**C presents a flow chart illustrating how spill-over charge current can be routed through another power manager in accordance with the disclosed embodiments.

FIG. **5**D presents a flow chart illustrating how power is adjusted when a power source is unplugged from a bus interface in the portable computing device in accordance with the disclosed embodiments.

DETAILED DESCRIPTION

The following description is presented to enable any person skilled in the art to make and use the disclosed embodiments, and is provided in the context of a particular application and its requirements. Various modifications to the disclosed embodiments will be readily apparent to those skilled in the art, and the general principles defined herein may be applied to other embodiments and applications without departing from the spirit and scope of the disclosed embodiments. Thus, the disclosed embodiments are not limited to the embodiments shown, but are to be accorded the widest scope consistent with the principles and features disclosed herein.

The data structures and code described in this detailed description are typically stored on a computer-readable storage medium, which may be any device or medium that can store code and/or data for use by a computer system. The computer-readable storage medium includes, but is not limited to, volatile memory, non-volatile memory, magnetic and optical storage devices such as disk drives, magnetic tape, CDs (compact discs), DVDs (digital versatile discs or digital video discs), or other media capable of storing code and/or data now known or later developed.

The methods and processes described in the detailed description section can be embodied as code and/or data, which can be stored in a computer-readable storage medium as described above. When a computer system reads and executes the code and/or data stored on the computer-readable storage medium, the computer system performs the methods and processes embodied as data structures and code and stored within the computer-readable storage medium. Furthermore, the methods and processes described below can be included in hardware modules. For example, the hardware modules can include, but are not limited to, application-specific integrated circuit (ASIC) chips, field-programmable gate arrays (FPGAs), and other programmable-logic devices now known or later developed. When the hardware modules are activated, the hardware modules perform the methods and processes included within the hardware modules.

Portable Computing Device

FIG. **1** illustrates a portable computing device **106** which can receive power through multiple bus interfaces in accordance with the disclosed embodiments. Portable computing device **106** can generally include any type of portable electronic device, such as a laptop computer system, a tablet personal computer (PC), a digital media player or a smart phone. As illustrated in FIG. **1**, portable computing device **106** includes a display **107** which is used to output graphical images and text for a user to view. Portable computing device **106** additionally includes a processor, a memory and a battery, which are not illustrated in FIG. **1**.

Portable computing device **106** provides multiple bus interfaces, including bus interface **114** and bus interface **118**. Bus interfaces **114** and **118** can be universal serial bus (USB) interfaces, which can be used to connect portable computing device **106** to various external storage devices, I/O devices, networks, power adapters and computer systems.

FIG. **1** illustrates how bus interface **114** can be used to couple portable computing device **106** to a host **102**. Host **102** can generally include any type of computing device or computer system that contains a processor and memory and can communicate with portable computing device **106**. Note that host **102** provides power **110** to, and also communicates data **112** with, portable computing device **106** through bus interface **114**.

FIG. **1** also illustrates how a power adapter **104** ("power brick") can be used to provide power **116** to portable computing device **106** through bus interface **118**. Note that power adapter **104** also includes data lines **117** to bus interface **118**. (These data lines **117** are used to identify what type of power source is used.) Also note that both host **102** and power adapter **104** receive power from a source of wall power **101**.

Power-Management Circuitry

FIG. **2** illustrates details of power-management circuitry within portable computing device **106** in accordance with the disclosed embodiments. On the left-hand side of FIG. **1**, power lines from bus interface **114** feed into over-voltage protection and reverse-voltage protection (OVP-RVP) circuitry **202** and also through a power-path management (PPM) chip **204**. (Note that PPM chip **204** can be implemented using Linear Technology part number LTC4412.) OVP-RVP circuitry **202** and PPM chip **204** operate collectively to protect the power-management circuitry from over-voltage conditions and reverse-voltage conditions.

The output of OVP-RVP circuitry **202** and PPM chip **204** feeds into power-manager/charger chip **206**. Power-manager/charger chip **206** is configured to provide a specific input current for a power bus (PBUS) **230**, which is used to drive a load **232**. Power-manager/charger chip **206** also provides a specific charging current **231**, which is used to charge a battery **240**. (Note that power-manager/charger chip **206** can be implemented using Linear Technology part number LTC4099.)

Power-manager/charger chip **206** can be configured to provide specific input currents and specific charging currents by selectively tying certain inputs of power-manager/charger chip **206** to ground through selectable resistance values. (This is illustrated in FIG. **2** by the selectable resistors **207** and **208**, which are coupled to power-manager/charger chip **206**.) In one embodiment, microcontroller **220** can configure these resistance values by selectively activating the illustrated transistors (FETs) in resistor networks **207** and **208**. Note that these FETs can be mapped to specific General-Purpose Input-Output (GPIO) locations to enable microcontroller **220** to selectively active them. Also note that if power-manager/charger chip **206** heats up past a threshold temperature, an over-temperature condition arises, which causes power-manager/charger chip **206** to limit the input current and/or charging current.

Note that bus interface **118** is coupled to its own power-management circuitry which is similar to the power-management circuitry coupled to bus interface **114**, including OVP-RVP circuitry **212**, PPM chip **214** and power-manager/charger chip **216**. Power-manager/charger chip **216** can likewise be configured to provide a specific input current for power bus (PBUS) **230**, and to provide a specific charging current **231** for battery **240**. Note that input current from power-manager/charger chip **206** is combined with input current for power-manager/charger chip **216** to drive PBUS **230**. Similarly, the charging current from power-manager/charger chip **206** is combined with charging current from power-manager/charger chip **216** to charge battery **240**.

The load **232** which is driven by PBUS **230** includes microcontroller **220**, which performs general computational opera-

tions for portable computing device **106**. Microcontroller **220** can also control power-manager/charger chips **206** and **216** through commands communicated through I^2C bus **221**. As mentioned above, microcontroller **220** can also control selectable resistors **207**, **208**, **217** and **218** through FETs which are mapped to specific GPIO locations.

Microcontroller **220** receives power directly from PBUS **230**, and also receives power from the outputs of PPM chips **204** and **214** directly to facilitate a system power-up operation. This system power-up operation is described in more detail below with reference to the flow chart illustrated in FIG. **4**.

Circuitry for Switching Data Lines

FIG. **3** illustrates circuitry which is used to switch data lines (as opposed to power lines) from bus interfaces **114** and **118** in accordance with the disclosed embodiments. More specifically, FIG. **3** illustrates how a pair of data signals D_{2+} and D_{2-} from bus interface **118** can be switched with a pair of data signals D_{1+} and D_{1-} from bus interface **114**. (Note that there actually exist many pairs of data signals in each bus interface. Hence, FIG. **3** only illustrates how an exemplary pair of data signals from each bus interface can be switched.)

An analog multiplexer (MUX) **302** is used to select either data signals D_{1+} and D_{1-} or data signals D_{2+} and D_{2-} to feed into voltage-measurement circuitry **306** which determines whether the selected data signals are active. If the selected data signals are active, microcontroller **220** (in FIG. **2**) infers that the associated bus interface is coupled to a host computer system and not to a power adapter.

A USB MUX **304** (which can be a digital MUX) is used to couple either data signals D_{1+} and D_{1-} or data signals D_{2+} and D_{2-} to a local USB host **308**, which resides within portable computing device **106**. This enables the local USB host **308** to communicate with a remote USB host which is coupled to the associated bus interface.

In some embodiments, microcontroller **220** switches analog MUX **302** and USB MUX **304** by writing commands to specific GPIO locations.

Power-Up Sequence

FIG. **4** presents a flow chart illustrating a power-up sequence for a portable computing device in accordance with the disclosed embodiments. At the start of this sequence, portable computing device **106** is turned off in a powered down state. Next, a power source is plugged into one of the USB interfaces, say for example, bus interface **114** (step **402**). This power source starts powering up the system and causes the associated power-manager/charger chip **206** to default to a 100 mA input current limit to drive load **232** (step **404**), and a 500 mA charging current limit to charge battery **240** (step **406**).

Next, PBUS **230** powers up the rest of the system (step **408**). Once microcontroller **220** receives power, microcontroller **220** performs various operations to determine whether the input power source is a power adapter or a USB host (step **410**). Then, based on the determination, microcontroller **220** configures power-manager/charger chip **206** to adjust the input current limit and the charging current limit to match the capabilities of the specific power source (step **412**). For example, if the power source is determined to be a power adapter which can supply 2.1 A of current, the input current limit can be set to 2100 mA and the charging current can be set to a maximum possible value of 1.5 A. In addition, >100 mA of extra spill-over charging current can be routed to battery **240** through the other power-manger/charger chip **216** as is described in more detail below.

Power Adjustments

After the power-up sequence is complete, the system power can be dynamically adjusted based on a number of different conditions. For example, FIG. **5**A presents a flow chart illustrating how power can be adjusted when a power source is plugged into a bus interface. In this example, microcontroller **220** receives an interrupt from a power-manager/charger chip **216** indicating that a power source has been plugged into the associated bus interface (step **502**). In response to this interrupt, microcontroller **220** determines whether the power source is a host or a power adapter (step **504**). Then, based on the determination, microcontroller **220** configures power-manager/charger chip **206** to adjust the input current limit and the charging current limit to match the capabilities of the specific power source (step **506**).

In another example, FIG. **5**B presents a flow chart illustrating how power is adjusted when the voltage supplied by a power source drops below a minimum threshold voltage in accordance with the disclosed embodiments. In this example, microcontroller **220** receives an interrupt from a power-manager/charger chip **206** indicating that a power source has been unplugged from the associated bus interface **114** (step **512**). In response to this interrupt, microcontroller **220** configures power-manager/charger chip **206** to turn off the input current and the charging current received through bus interface **114** (step **514**).

In yet another example, FIG. **5**C presents a flow chart illustrating how spill-over charge current can be routed through another power-manager/charger chip **206** in accordance with the disclosed embodiments. In this example, if power-manager/charger chip **206** is providing a maximum possible charging current that the power-manager/charger chip **206** is capable of providing, and if after providing any required input current, power-manager/charger chip **206** is capable of providing additional current, the additional current is routed to the other power-manager/charger chip **216**, so that the other power-manager/charger chip **216** can provide the additional current as charging current for the battery (step **522**).

For example, consider the case where the power source is determined to be a power adapter which can supply 2.1 A of current. Also assume that there is almost no load on the system so the input current limit can be set to 100 mA. In this case, the charging current can be set to a maximum possible value of 1.5 A. In addition, spill-over charging current can be routed through PBUS **230** into a power output **219** of power-manager/charger chip **216**. (In this case, the power output **219** functions as a power input.) This enables power-manager/charger chip **216** to use the spill-over charging current to charge battery **240**.

In a final example, FIG. **5**D presents a flow chart illustrating how power is adjusted when a power source is unplugged from a bus interface in accordance with the disclosed embodiments. In this example, microcontroller **220** receives an interrupt indicating that a power source was unplugged from bus interface **114** (step **532**). Next, if no power sources are plugged into the other bus interface (namely, bus interface **118**), microcontroller **220** configures power-manager/charger chip **216** switch over to using battery **240** as a power source for portable computing device **106** (step **534**).

The foregoing descriptions of embodiments have been presented for purposes of illustration and description only. They are not intended to be exhaustive or to limit the present description to the forms disclosed. Accordingly, many modifications and variations will be apparent to practitioners skilled in the art. Additionally, the above disclosure is not

intended to limit the present description. The scope of the present description is defined by the appended claims.

What is claimed is:

1. A method for controlling power received through multiple bus interfaces in a portable computing device, comprising:

sensing when power sources are plugged into first and second bus interfaces in the portable computing device, wherein the first bus interface is coupled to a first power manager, and the second bus interface is coupled to a second power manager;

upon sensing that a first power source is plugged into the first bus interface in the portable computing device, determining whether the first power source is a host or a power adapter, and

based upon whether the first power source is a host or a power adapter, using the first power manager coupled to the first bus interface to limit a first input current from the first power source to power the computing device, and to selectively provide a first charging current to a rechargeable battery for the portable computing device; and

upon sensing that the first power source becomes unplugged from the first bus interface, determining whether a power source is plugged into the second bus interface,

if no power source is plugged into the second bus interface, configuring the second power manager coupled to the second bus interface to perform switching over to using the rechargeable battery to provide power for the portable computing device.

2. The method of claim **1**, further comprising:

upon sensing that a second power source is plugged into the second bus interface in the portable computing device,

determining whether the second power source is a host or a power adapter, and

based upon whether the second power source is a host or a power adapter, using the second power manager coupled to the second bus interface to limit a second input current received from the second power source to power the computing device, and to selectively provide a second charging current to the rechargeable battery.

3. The method of claim **1**, wherein the method further comprises:

determining whether a voltage supplied by the first power source falls below a minimum threshold voltage; and

if so, reducing the first input current received from the first power source.

4. The method of claim **1**, wherein if the portable computing device is powered off when the first power source is plugged into the first bus interface, the first power manager supplies an initialization current to power up the portable computing device before the portable computing device can determine whether the first power source is a host or a power adapter.

5. The method of claim **1**, wherein if the first power manager is providing a maximum charging current that the first power manager is capable of providing to the rechargeable battery, and if the first power source is capable of providing additional current, the method further comprises routing the additional current to the second power manager associated with the second bus interface, so that the second power manager can provide the additional current as charging current for the rechargeable battery.

6. The method of claim **1**, wherein sensing when a power source is plugged into a bus interface involves receiving an interrupt from a dedicated power manager for the bus interface indicating that the power source is plugged into the bus interface.

7. The method of claim **1**, wherein if the first power source is a host, the method further comprises using the first bus interface to facilitate communications between the first power source and the portable computing device, wherein the communications can take place while the first power source is supplying power to the portable computing device.

8. The method of claim **1**, wherein determining whether the first power source is a host or a power adapter involves:

measuring voltage signals on data lines from the first interface to determine whether the first power source is generating data signals; and

if the first power source is generating data signals, determining that the first power source is a host.

9. The method of claim **1**, wherein the first bus interface includes:

a universal serial bus (USB) interface; or

a FireWire interface.

10. A portable computing device which can receive power through multiple bus interfaces, comprising:

a controller;

a memory; and

multiple bus interfaces including first and second bus interfaces, wherein the first bus interface is coupled to a first power manager, and the second bus interface is coupled to a second power manager;

wherein upon detecting that a first power source is plugged into a first bus interface, the controller is configured to,

determine whether the first power source is a host or a power adapter, and

based upon whether the first power source is a host or a power adapter, configure the first power manager coupled to the first bus interface to limit a first input current from the first power source to power the computing device, and to selectively provide a first charging current to a rechargeable battery for the portable computing device; and

wherein upon sensing that the first power source becomes unplugged from the first bus interface, if no power source is plugged into the second bus interfaces, the second power manager coupled to the second bus interface is configured to switch over to using the rechargeable battery to provide power for the portable computing device.

11. The portable computing device of claim **10**, wherein upon detecting that a second power source is plugged into the second bus interface in the portable computing device, the controller is configured to,

determine whether the second power source is a host or a power adapter, and

based upon whether the second power source is a host or a power adapter, configure a second power manager coupled to the second bus interface to limit a second input current received from the second power source to power the computing device, and to selectively provide a second charging current to the rechargeable battery.

12. The portable computing device of claim **10**, wherein the controller is further configured to:

determine whether a voltage supplied by the first power source falls below a minimum threshold voltage; and

if so, reduce the first input current received from the first power source.

13. The portable computing device of claim **10**, wherein if the portable computing device is powered off when the first power source is plugged into the first bus interface, the first

power manager is configured to supply an initialization current to power up the portable computing device before the portable computing device can determine whether the first power source is a host or a power adapter.

14. The portable computing device of claim **10**, wherein if the first power manager is providing a maximum charging current that the first power manager is capable of providing to the rechargeable battery, and if the first power source is capable of providing additional current, the first power manager is configured to route the additional current to the second power manager associated with the second bus interface, so that the second power manager can provide the additional current as charging current for the rechargeable battery.

15. The portable computing device of claim **10**, wherein the controller determines that a power source is plugged into a bus upon receiving an interrupt from a dedicated power manager for the bus interface, wherein the interrupt indicates that the power source is plugged into the bus interface.

16. The portable computing device of claim **10**, wherein if the first power source is a host, the first bus interface is configured to facilitate communications between the first power source and the portable computing device, while the first power source is supplying power to the portable computing device.

17. The portable computing device of claim **10**, wherein determining whether the first power source is a host or a power adapter involves:

measuring voltage signals on data lines from the first interface to determine whether the first power source is generating data signals; and

if the first power source is generating data signals, determining that the first power source is a host.

18. The portable computing device of claim **10**, wherein the first bus interface includes:

a universal serial bus (USB) interface; or

a FireWire interface.

19. A computer-readable non-transitory storage medium storing instructions that when executed by a controller in portable computing device cause the controller to perform a method for controlling power received through multiple bus interfaces including first and second bus interfaces in the portable computing device, the method comprising:

upon detecting that a first power source is plugged into the first bus interface in the portable computing device,

determining whether the first power source is a host or a power adapter, and

based upon whether the first power source is a host or a power adapter, configuring a first power manager coupled to the first bus interface to limit a first input current from the first power source to power the computing device, and to selectively provide a first charging current to a rechargeable battery for the portable computing device; and

upon sensing that the first power source becomes unplugged from the first bus interface, determining whether a power source is plugged into the second bus interface,

if no power source is plugged into the second bus interface, configuring a second power manager coupled to the second bus interface to perform switching over to using the rechargeable battery to provide power for the portable computing device.

20. The computer-readable non-transitory storage medium of claim **19**, wherein the method further comprises:

upon detecting that a second power source is plugged into the second bus interface in the portable computing device,

determining whether the second power source is a host or a power adapter, and

based upon whether the second power source is a host or a power adapter, using the second power manager coupled to the second bus interface to limit a second input current received from the second power source to power the computing device, and to selectively provide a second charging current to the rechargeable battery.

21. The computer-readable non-transitory storage medium of claim **19**, wherein the method further comprises:

determining whether a voltage supplied by the first power source falls below a minimum threshold voltage; and

if so, reducing the first input current received from the first power source.

* * * * *