US007085876B2

(12) **United States Patent**
Lai et al.

(10) **Patent No.: US 7,085,876 B2**
(45) **Date of Patent: Aug. 1, 2006**

(54) **USB CONTROLLING APPARATUS FOR DATA TRANSFER BETWEEN COMPUTERS AND METHOD FOR THE SAME**

(75) Inventors: **Ching-Chung Lai**, Taipei (TW); **Hung-Pin Chen**, Taipei (TW)

(73) Assignee: **VIA Technologies, Inc.**, Taipei (TW)

(*) Notice: Subject to any disclaimer, the term of this patent is extended or adjusted under 35 U.S.C. 154(b) by 252 days.

(21) Appl. No.: **10/617,722**

(22) Filed: **Jul. 14, 2003**

(65) **Prior Publication Data**

US 2004/0148451 A1 Jul. 29, 2004

(30) **Foreign Application Priority Data**

Jan. 28, 2003 (TW) ..... 92101753 A

(51) **Int. Cl.**
G06F 13/00 (2006.01)
G06F 13/40 (2006.01)
G06F 3/00 (2006.01)

(52) **U.S. Cl.** **710/313**; 710/8; 710/14; 710/104; 710/110; 710/305; 710/316

(58) **Field of Classification Search** 710/8, 710/31, 38, 62, 72, 104, 305, 313, 316
See application file for complete search history.

(56) **References Cited**

U.S. PATENT DOCUMENTS

5,784,581 A * 7/1998 Hannah 710/110
6,076,119 A * 6/2000 Maemura et al. 710/15
6,230,226 B1 * 5/2001 Hu et al. 710/305
6,549,958 B1 * 4/2003 Kuba 710/14
6,732,218 B1 * 5/2004 Overtoom et al. 710/313
6,820,166 B1 * 11/2004 Kitagawa 710/316
2003/0023804 A1 * 1/2003 Matsuda et al. 710/313
2003/0030412 A1 * 2/2003 Matsuda et al. 320/127
2003/0104835 A1 * 6/2003 Douhet 455/557
2003/0204652 A1 * 10/2003 Saito et al. 710/33
2003/0212841 A1 * 11/2003 Lin 710/62
2004/0153597 A1 * 8/2004 Kanai et al. 710/305

FOREIGN PATENT DOCUMENTS

JP 2000196986 A * 7/2000

(Continued)

OTHER PUBLICATIONS

Dallas Semicunductors; "USB On-The-Go Basics"; Dallas Semicunductors; Dec. 20, 2002; available online at <http://pdfserv.maxim-ic.com/en/an/AN1822.pdf>.*

Primary Examiner—Paul R. Myers
Assistant Examiner—Ryan Stiglic
(74) *Attorney, Agent, or Firm*—Rosenberg, Klein & Lee

(57) **ABSTRACT**

A USB controlling apparatus for data transfer between computers and method for the same are provided. The apparatus comprises a host controller providing a host function of USB interface; a device function circuit providing a device function of USB interface; at least one connection for connecting to a USB device or a USB cable by way of data transfer; and a path switch unit. The path switch unit connected to the host controller, device function circuit and the USB data lines, used to switch a connection path of the USB data lines between the host controller and the device function circuit, which is able to provide a host function mode to connect USB apparatus for data transmitting or a device function mode to connect with other computer host for data transmitting.

4 Claims, 4 Drawing Sheets

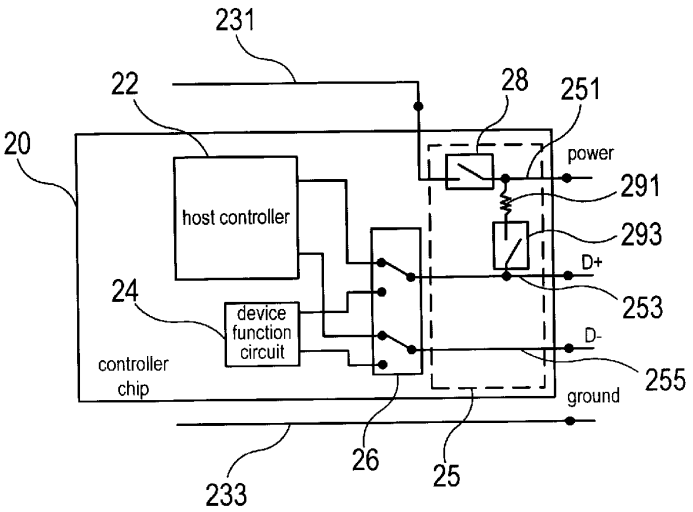

FOREIGN PATENT DOCUMENTS

JP 2003044186 A * 2/2003

JP 2003263253 A * 9/2003

* cited by examiner

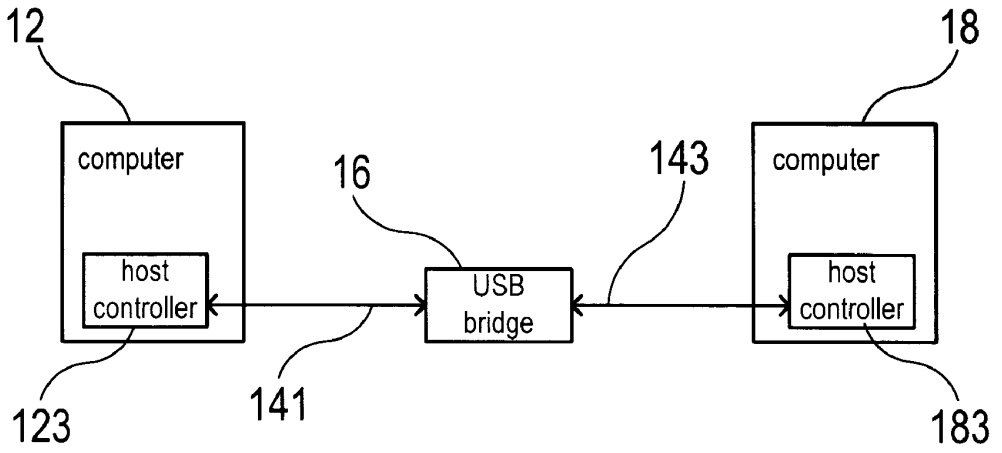

FIG. 1
(PRIOR ART)

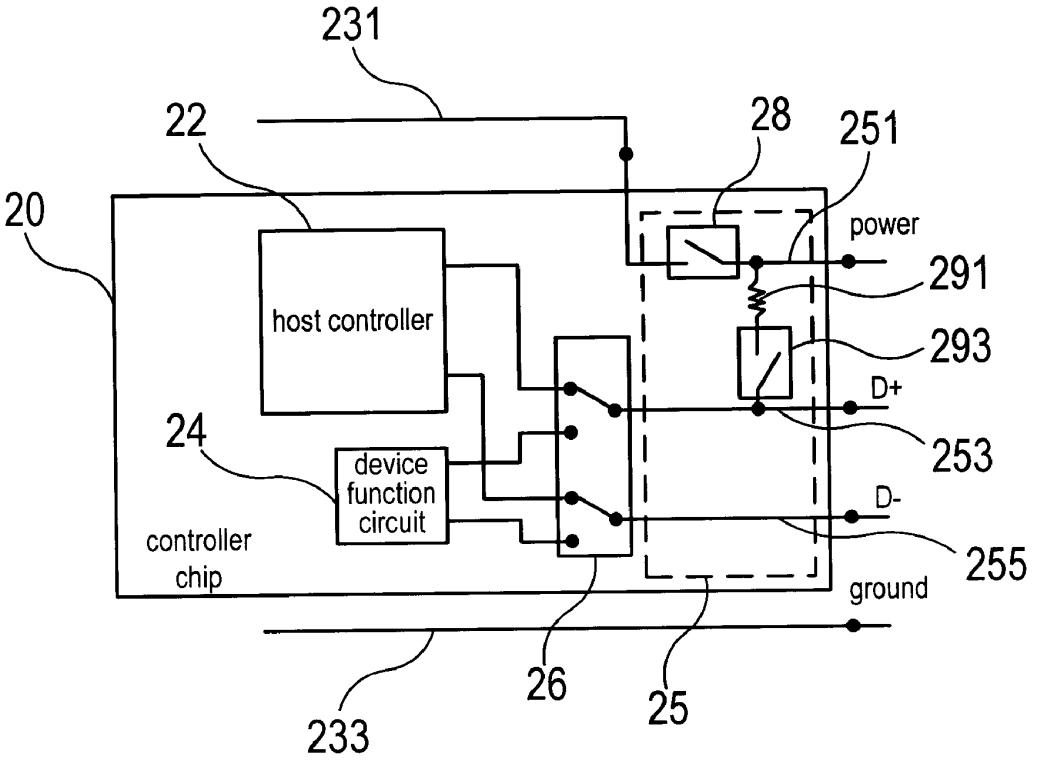
231
22
28
251
20
power
291
host controller
293
D+
24
253
device function circuit
D-
controller chip
255
ground
26
25
233

FIG. 2

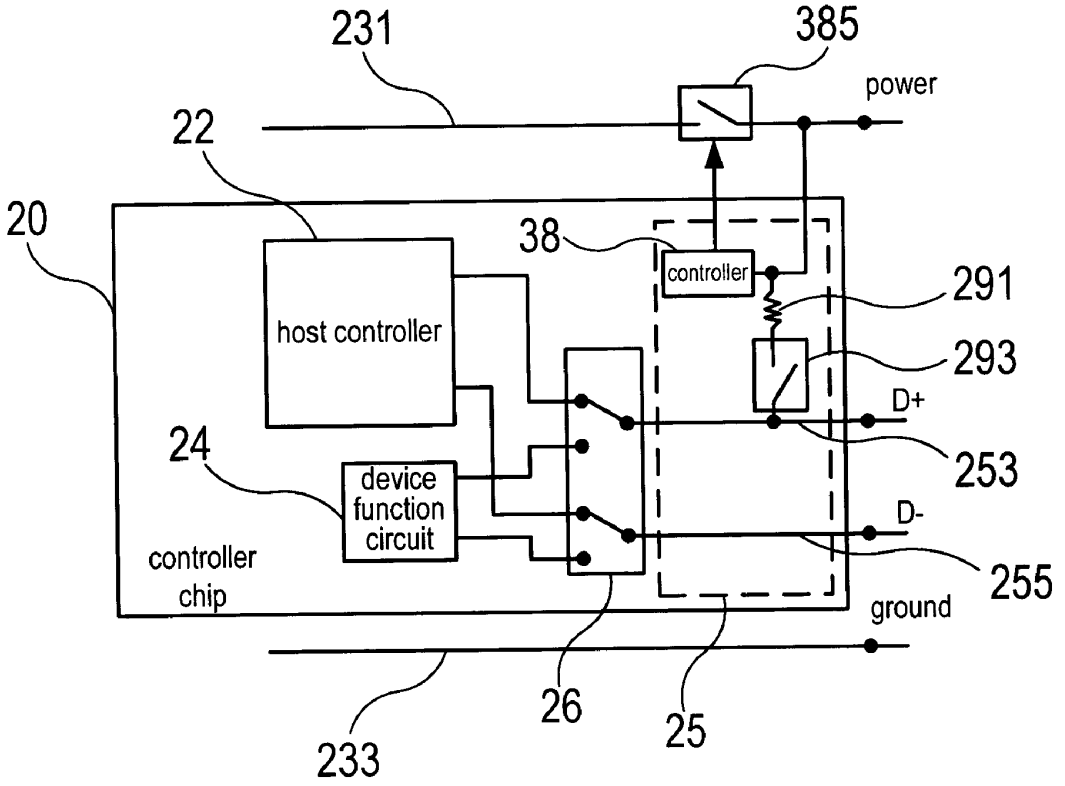
231
385
power
22
20
38
controller
291
host controller
293
D+
24
253
device function circuit
D-
controller chip
255
ground
26
25
233

FIG. 3

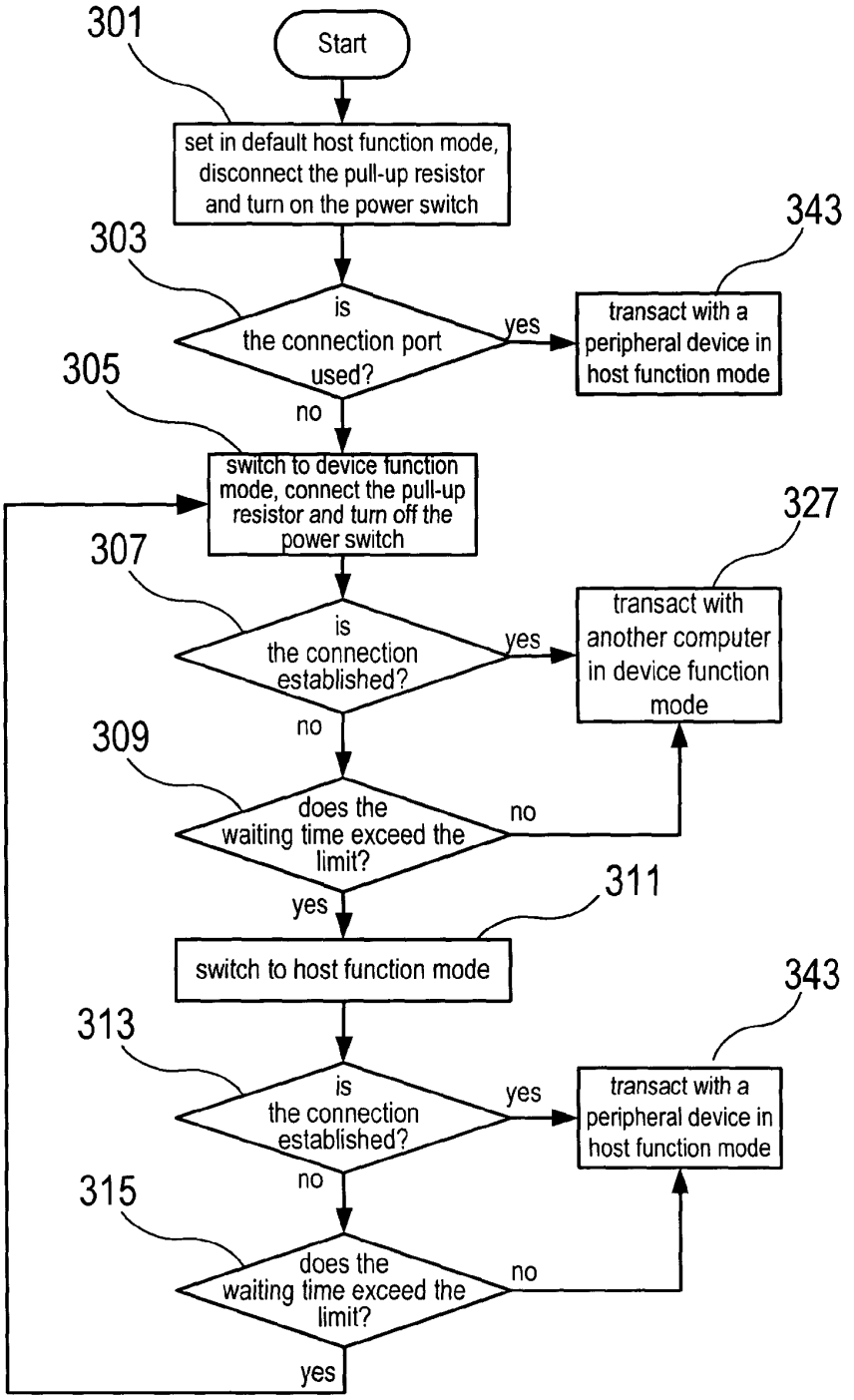
301
Start
set in default host function mode, disconnect the pull-up resistor and turn on the power switch
303
is the connection port used?
yes
343
transact with a peripheral device in host function mode
no
305
switch to device function mode, connect the pull-up resistor and turn off the power switch
307
is the connection established?
yes
327
transact with another computer in device function mode
no
309
does the waiting time exceed the limit?
no
yes
311
switch to host function mode
313
is the connection established?
yes
343
transact with a peripheral device in host function mode
no
315
does the waiting time exceed the limit?
no
yes

FIG. 4

USB CONTROLLING APPARATUS FOR DATA TRANSFER BETWEEN COMPUTERS AND METHOD FOR THE SAME

FIELD OF THE INVENTION

The present invention relates to a USB controlling apparatus and method for the same, more particularly to a USB controlling apparatus for data transfer between computers and method for the same, the USB controlling apparatus being provided with a device function circuit and a path switch to enable a computer to have both host and device function.

BACKGROUND OF THE INVENTION

USB (universal serial bus) interface allows for plug-and-play function, up to 127 physical devices connection, provision of 5V electrical power and requires only one IRQ. Therefore, USB becomes standard interface for nowadays computer. Moreover, the USB 2.0 can provide high data transfer rate of 480 Mbps and is feasible for higher-performance peripheral such as scanners, printers and storage devices.

The conventional ways of data transfer between computers rely on cable connected between printer ports of computers or connected between network interfaces cards of computers. However, the data transfer rate is low by above conventional ways and network interfaces card is required for latter approach. As the prevailing of USB interface, it is proposed to use USB interface for data transfer between computers.

The USB interface is functioned with the master/slave architecture. Therefore, the data transfer between a computer and a peripheral can be established only after the computer is recognized to be a host and the peripheral is recognized to be a device.

To provide data transfer between computers through USB interface, a USB bridge **16** is provided between two computers **12** and **18**, as shown in FIG. **1**. The USB bridge **16** is connected to a host controller **123** of the computer **12** through a USB cable **141**, and connected to a host controller **183** of the computer **18** through a USB cable **143**. In this scheme, both of the computers **12** and **18** provide host function and the USB bridge **16** provides device function to establish data transfer between the two computers **12** and **18**.

In above approach, one USB bridge and two USB cables are required to achieve data transfer between two computers. It costs higher expense and is inconvenient for user.

Moreover, the USB bridge is further modified to incorporate into a USB cable. However, the USB cable with bridging function has higher cost and cannot be used for data transfer between computer and peripheral.

SUMMARY OF THE INVENTION

It is the object of the present invention to provide a USB controlling apparatus for data transfer between computers, wherein the computer using the USB controlling apparatus has both host function and device function.

In one aspect of the present invention, the USB controlling apparatus has a device function circuit to provide a device function for USB interface of a computer. The computer can communicate data with another computer through the USB controlling apparatus.

In another aspect of the present invention, the USB controlling apparatus has a path switch to switch a path to the device function circuit or a host controller. Therefore, a computer using the USB controlling apparatus can transfer data to a peripheral or another computer.

In still another aspect of the present invention, the USB controlling apparatus has a power switch, a pull-up resistor and a pull-up switch, which are turned on/off during device function mode or host function mode of a computer using the USB controlling apparatus. Therefore, the connection status of the computer with a peripheral or another computer can be sensed.

In still another aspect of the present invention, the device function mode or the host function mode of a computer using the USB controlling apparatus can be manually or automatically set.

In still another aspect of the present invention, a predetermined waiting time is set for limiting a time duration to check connection status of the computer with a peripheral or another computer. The computer is automatically and alternatively switched to device function mode or host function mode if the connection is not established within the predetermined waiting time.

The various objects and advantages of the present invention will be more readily understood from the following detailed description when read in conjunction with the appended drawing, in which:

BRIEF DESCRIPTION OF DRAWING

FIG. **1** shows a schematic diagram of a prior art USB interface for data transfer between computers;

FIG. **2** shows a schematic diagram of a first preferred embodiment of the present invention;

FIG. **3** shows a schematic diagram of a second preferred embodiment of the present invention; and

FIG. **4** shows a flowchart of the method according to the present invention.

DETAILED DESCRIPTION OF THE INVENTION

FIG. **2** shows a schematic diagram of a first preferred embodiment of the present invention. The USB control apparatus according to this preferred embodiment is implemented into a controller chip **20**. The controller chip **20** comprises a host controller **22** with a USB interface, a device function circuit **24**, a path switch **26** and a connection port **25**. The connection port **25** comprises at least one set of data lines (data line D_+**253** and data line D_**255**) for data transfer. The path switch **26** is connected to the host controller **22**, the device function circuit **24** and the data line D_+**253** and D_**255** of the connection port **25**. The path switch **26** is functioned to switch a connection path of the connection port **25** between the host controller **22** and the device function circuit **24** when the controller chip **20** is to be switched between a host function mode and a device function mode.

The connection port **25** further comprises a power adapting line **251** with a power switch **28**. The power adapting line **251** is connected to the data line D_+**253** through a pull-up resistor **291** and a pull-up switch **293** in serial connection. The power adapting line **251** is further connected to a USB power line **231** on motherboard to feed electric power to the controller chip **20**. The power adapting line **251**, together with the data line D_+**253**, the data line D_**255** and a ground line **233** of the motherboard, provides USB connection to a peripheral USB device or another computer.

The power switch **28** is turned on and the pull-up switch **293** is turned off when the connection path of the connection port **25** is switched to the host controller **22** by the path switch **26**. At this time, the USB interface of the controller chip **20** is operated in the host function mode and has data transfer with a peripheral USB device. The power switch **28** is turned off and the pull-up switch **293** is turned on when the connection path of the connection port **25** is switched to the device function circuit **24** by the path switch **26**. At this time, the USB interface of the controller chip **20** is operated in the device function mode and has data transfer with another computer.

FIG. **3** shows a schematic diagram of a second preferred embodiment of the present invention. The controller chip **20** has similar components as those shown in FIG. **2** except that a power switch **385** is arranged at the USB power line **231** on the motherboard end. Moreover, the connection port **25** further has a power switch controller **38** with input nodes connected to the USB power line **231** and the pull-up resistor **291**, respectively, such that the connection port **25** is selectively connected to peripheral USB device and another computer. The power switch controller **38** has output node connected to the power switch **385** to control the turning on/off of the power switch **385**.

In above-mentioned embodiments, the path switch **26** can be implemented by a multiplexer, while the power switch **28** and the pull-up switch **293** can be implemented by transistor circuit.

FIG. **4** shows a flowchart according the method of the present invention. The connection path of the connection port **25** can be switched either in manual operation or automatic operation according to this method.

As shown in FIG. **4**, in automatic operation, the default data transfer mode is set to be host function mode in step **301**. Moreover, the connection port is switched to the host controller by the path switch, the power switch is turned on and the pull-up switch is turned off in step **301**. The process passes next to step **303** for judging whether the connection port is used. If true, the host function mode is sustained and the computer using the controller chip accesses a peripheral device in the host function mode in step **343**, else the operation mode of the controller chip is switched to a device function mode in step **305**. In step **305**, the connection port is switched to the device function circuit by the path switch, the power switch is turned off and the pull-up switch is turned on such that the USB interface of the controller chip is operated as device and to be established connection with another computer.

After step **305**, the connection condition of the controller chip to another computer is examined in step **307**. If connection is established, the controller chip is functioned as a device connected to another computer and has data transfer with another computer in step **327**, else the controller chip keeps waiting and the elapsed time is examined in step **309**. If the connection is established in elapsed time within a predetermined time limit, the controller chip is operated in the device function mode and has data transfer with another computer, else the controller chip is switched to host function mode in step **311**.

Similarly, in step **313** after step **311**, the connection condition of the controller chip to the peripheral device is examined. If the connection is established, the controller chip is functioned as a host connected to the peripheral device and has data transfer with the peripheral device in step **343**, else the controller chip keeps waiting and the elapsed time is examined in step **315**. If the connection is established in elapsed time within the predetermined time limit, the controller chip is operated in the host function mode and has data transfer with the peripheral device, else the controller chip is switched to device function mode in step **305** and the connection condition is kept examining in succeeding step **307**.

The predetermined waiting time limit can be set according to user's requirement. When the computer using the controller chip is operated in host function mode, the detection of connection condition is performed in ordinary detection way.

The above-mentioned preferred embodiments are exemplified with USB 2.0 version (high speed bus) or full speed version of USB 1.1. However, the present invention can also be applied to low speed version, i.e., USB 1.1 as long as another pull-up resistor and pull-up switch are provided between the power adapting line **251** and the data line D_**255** and the switch is controlled to turn on/off by software or firmware.

Although the present invention has been described with reference to the preferred embodiment thereof, it will be understood that the invention is not limited to the details thereof. Various substitutions and modifications have suggested in the foregoing description, and other will occur to those of ordinary skill in the art. Therefore, all such substitutions and modifications are intended to be embraced within the scope of the invention as defined in the appended claims.

What is claimed is:

1. A method for a USB controlling apparatus including at least one connection port having a set of USB data lines for connecting to a USB device or a USB cable for data transfer, a path switch connected to a host controller, a device function circuit and said USB data lines, a power switch having one end connected to a power line on a motherboard and another end connected to a power adapting line, and a series connection of a pull-up resistor and a pull-up switch connected between said power adapting line and one of said set of USB data lines, said method comprising following steps:

setting a host function mode as a default operation mode of said USB controlling apparatus, setting said host function mode includes connecting said data lines to said host controller by said path switch and turning on said power switch and turning off said pull-up switch;

detecting whether a first connection port of said at least one connection ports is being used by said host controller;

when said first connection port is being used by said host controller, said USB controlling apparatus is operated in said host function mode;

when said first connection port is not being used by said host controller, said USB controlling apparatus is switched to operate in a device function mode, operating in said device function mode includes connecting said data lines to said device function circuit by said path switch and turning off said power switch and turning on said pull-up switch;

providing a predetermined waiting time;

detecting whether a connection is established through said first connection port for said USB controlling apparatus;

when said connection is established through said first connection port, said USB controlling apparatus is operated in said device function mode; and,

when said connection is not established through said first connection port, examining whether said connection is

established within said predetermined waiting time for reconfiguration of said first connection port responsive thereto.

2. The method as in claim **1**, further comprising following steps:

operating said USB controlling apparatus in said device function mode if said connection is established within said predetermined waiting time;

else switching said USB controlling apparatus to said host function mode if said connection is not established within said predetermined waiting time.

3. The method as in claim **1**, wherein said predetermined waiting time is a user-defined value.

4. A method for a USB controlling apparatus including at least one connection port having a set of USB data lines for connecting to a USB device or a USB cable for data transfer, a path switch connected to a host controller, a device function circuit and said USB data lines, a power switch having one end connected to a power line on a motherboard and another end connected to a power adapting line, and a series connection of a pull-up resistor and a pull-up switch connected between said power adapting line and one of said set of USB data lines, said method comprising following steps:

setting a host function mode as a default operation mode of said USB controlling apparatus, setting said host function mode includes connecting said data lines to said host controller by said path switch and turning on said power switch and turning off said pull-up switch;

detecting whether a first connection port of said at least one connection ports is being used by said host controller;

when said first connection port is being used by said host controller, said USB controlling apparatus is operated in said host function mode;

when said first connection port is not being used by said host controller, said USB controlling apparatus is switched to operate in a device function mode, operating in said device function mode includes connecting said data lines to said device function circuit by said path switch and turning off said power switch and turning on said pull-up switch;

providing a predetermined waiting time;

detecting whether a connection is established for said USB controlling apparatus;

when said connection is established, said USB controlling apparatus is operated in said device function mode;

when said connection is not established, examining whether said connection is established within said predetermined waiting time;

operating said USB controlling apparatus in said device function mode if said connection is established within said predetermined waiting time;

else switching said USB controlling apparatus to said host function mode if said connection is not established within said predetermined waiting time;

detecting whether a connection is established for said USB controlling apparatus;

if true, said USB controlling apparatus is operated in said host function mode;

else examining whether said connection is established within said predetermined waiting time;

operating said USB controlling apparatus in said host function mode when said connection is established within said predetermined waiting time.

switching said USB controlling apparatus to said device function mode when said connection is not established within said predetermined waiting time.

* * * * *