NEW TRENDS AND DEVELOPMENTS IN

AUTOMOTIVE SYSTEM ENGINEERING

Edited by **Marcello Chiaberge**

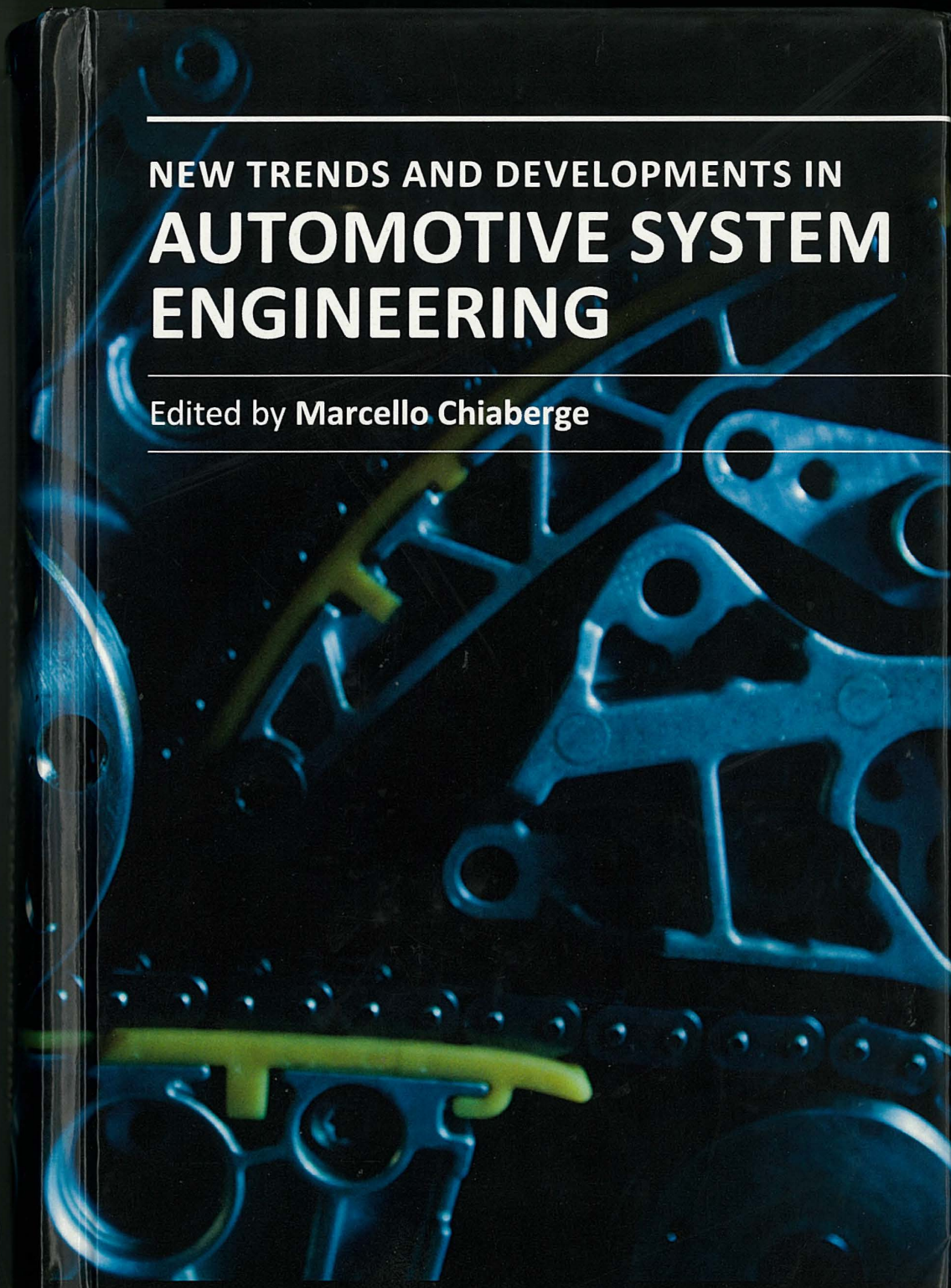

INTECH

Microchip Ex. 1050, p. 1
Microchip v. Aptiv
IPR2024-00494

NEW TRENDS AND DEVELOPMENTS IN AUTOMOTIVE SYSTEM ENGINEERING

Edited by **Marcello Chiaberge**

INTECHOPEN.COM

Microchip Ex. 1050, p. 2
Microchip v. Aptiv
IPR2024-00494

New Trends and Developments in Automotive System Engineering
Edited by Marcello Chiaberge

Published by InTech
Janeza Trdine 9, 51000 Rijeka, Croatia

Edition 2014
Copyright © 2011 InTech

All chapters are distributed under the Creative Commons Non Commercial Share Alike Attribution 3.0 license, which permits to copy, distribute, transmit, and adapt the work in any medium, so long as the original work is properly cited. After this work has been published by InTech, authors have the right to republish it, in whole or part, in any publication of which they are the author, and to make other personal use of the work. Any republication, referencing or personal use of the work must explicitly identify the original source.

Statements and opinions expressed in the chapters are these of the individual contributors and not necessarily those of the editors or publisher. No responsibility is accepted for the accuracy of information contained in the published articles. The publisher assumes no responsibility for any damage or injury to persons or property arising out of the use of any materials, instructions, methods or ideas contained in the book.

Publishing Process Manager Iva Lipovic

Technical Editor Teodora Smiljanic

Cover Designer InTech Design Team

Image Copyright hxdbzxy, 2010. Used under license from Shutterstock.com

Additional hard copies can be obtained from orders@intechopen.com

New Trends and Developments in Automotive System Engineering,
Edited by Marcello Chiaberge
p. cm.
ISBN 978-953-307-517-4

INTECH

open science | open minds

Contents

Preface XI

Part 1 Fuel Efficiency and ESU Improvements 1

Chapter 1 Experimental Test of a Diesel Engine using Envo-Diesel as an Alternative Fuel 3
M.A.Kalam and H.H. Masjuki

Chapter 2 Analytical Methods for Determining Automotive Fuel Composition 13
Jonas Gruber, Renata Lippi, Rosamaria W. C. Li and Adriano R. V. Benvenho

Chapter 3 Automotive Fuel Consumption in Brazil: Applying Static and Dynamic Systems of Demand Equations 29
Mariana Iootty, Helder Pinto Jr. and Francisco Ebeling

Part 2 Material Characterization and Improvements 45

Chapter 4 Fatigue and Fracture Behavior of Forging Die Steels 47
Ryuichiro Ebara

Chapter 5 Optimization of Injection Moulded Polymer Automotive Components 65
Ribeiro, C.J. and Viana, J.C.

Chapter 6 High Mn TWIP Steels for Automotive Applications 101
B. C. De Cooman, Kwang-geun Chin and Jinkyung Kim

Chapter 7 Powder Injection Moulding – An Alternative Processing Method for Automotive Items 129
Berenika Hausnerova

106408

Microchip Ex. 1050, p. 5
Microchip v. Aptiv
IPR2024-00494

Chapter 8 **Thermomechanical and Isothermal Fatigue Behavior of Gray Cast Iron for Automotive Brake Discs 147**
Omar Maluf, Jéferson Aparecido Moreto, Maurício Angeloni, Marco Antônio Colósio, José Carlos Santos, Waldek Wladimir Bose Filho and Dirceu Spinelli

Chapter 9 **Advanced Robotic Radiative Process Control for Automotive Coatings 167**
Fan Zeng and Beshah Ayalew

Part 3 New Components and Related Technologies 187

Chapter 10 **DC/DC Step-Up Converters for Automotive Applications: a FPGA Based Approach 189**
M. Chiaberge, G. Botto and M. De Giuseppe

Chapter 11 **The Thermo-mechanical Behavior in Automotive Brake and Clutch Systems 207**
Abdullah M. Al-Shabibi

Chapter 12 **Dynamic Analysis of an Automobile Lower Suspension Arm Using Experiment and Numerical Technique 231**
S. Abdullah, N.A. Kadhim, A.K. Ariffin and M. Hosseini

Chapter 13 **Increased Cooling Power with Nucleate Boiling Flow in Automotive Engine Applications 249**
Helfried Steiner, Günter Brenn, Franz Ramstorfer and Bernd Breitschädel

Chapter 14 **The "Equivalent Cable Bundle Method": an Efficient Multiconductor Reduction Technique to Model Automotive Cable Networks 273**
Guillaume Andrieu, Xavier Bunlon, Lamine Koné, Jean-Philippe Parmantier, Bernard Démoulin and Alain Reineixl

Chapter 15 **Fatigue Characteristic of Automotive Jounce Bumper 297**
Aidy Ali, R.S. Sidhu and M.S.A. Samad

Part 4 Control Systems and Algorithms 307

Chapter 16 **On the Control of Automotive Traction PEM Fuel Cell Systems 309**
Ahmed Al-Durra, Stephen Yurkovich and Yann Guezennec

Chapter 17 **An AdaptiveyTwo-Stage Observer in the Control of a New ElectromagneticyValve Actuator for Camless Internal Combustion Engines 343**
Paolo Mercorelli

Microchip Ex. 1050, p. 6
Microchip v. Aptiv
IPR2024-00494

Chapter 18 **Integrated Controller Design for Automotive Semi-Active Suspension Considering Vehicle Behavior with Steering Input 369**
Masaki Takahashi, Takashi Kumamaru and Kazuo Yoshida

Chapter 19 **Design of an Embedded Controller for Some Applications of an Automotives 383**
Preeti Bajaj and Dinesh Padole

Chapter 20 **Arbitration Schemes for Multiprocessor Shared Bus 395**
Preeti Bajaj and Dinesh Padole

Chapter 21 **Towards Automotive Embedded Systems with Self-X Properties 411**
Gereon Weiss, Marc Zeller and Dirk Eilers

Chapter 22 **4D Ground Plane Estimation Algorithm for Advanced Driver Assistance Systems 433**
Faisal Mufti, Robert Mahony and Jochen Heinzmann

Part 5 Infotainment and Navigation Systems 449

Chapter 23 **The Car Entertainment System 451**
Niels Koch

Chapter 24 **Information and Communication Support for Automotive Testing and Validation 473**
Mathias Johanson

Chapter 25 **Trends towards Automotive Electronic Vision Systems for Mitigation of Accidents in Safety Critical Situations 493**
Ciarán Hughes, Ronan O'Malley, Diarmaid O'Cualain, Martin Glavin and Edward Jones

Chapter 26 **Advancements in Automotive Antennas 513**
Brendan D. Pell, Edin Sulic, Wayne S. T. Rowe, Kamran Ghorbani and Sabu John

Part 6 Development Tools 539

Chapter 27 **Automotive VHDL-AMS Electro-mechanics Simulations 541**
Mariagrazia Graziano and Massimo Ruo Roch

Chapter 28 **Potential and Drawbacks of Raman (Micro)Spectrometry for the Understanding of Iron and Steel Corrosion 567**
Philippe Colomban

Microchip Ex. 1050, p. 7
Microchip v. Aptiv
IPR2024-00494

Chapter 29 **Computational Techniques for Automotive Antenna Simulations 585**
Faik Bogdanov, Roman Jobava, David Karkashadze, Paata Tsereteli, Anna Gheonjian, Ekaterina Yavolovskaya, Detlef Schleicher,Christoph Ullrich and Hicham Tazi

Chapter 30 **Voltage Stability Analysis of Automotive Power Nets Based on Modeling and Experimental Results 611**
Tom P. Kohler, Rainer Gehring, Joachim Froeschl, Dominik Buecherl and Hans-Georg Herzog

Part 7 Vehicle Design 631

Chapter 31 **Urban and Extra Urban Vehicles: Re-Thinking the Vehicle Design 633**
Andrea Festini, Andrea Tonoli and Enrico Zenerino

Chapter 32 **Analysis Approach of How University Automotive Competitions Help Students to Accelerate Their Automotive Engineer Profile 649**
Francisco J. Sánchez-Alejo, Miguel A. Álvarez, Francisco Aparicio and José M. López

Microchip Ex. 1050, p. 8
Microchip v. Aptiv
IPR2024-00494

Preface

In the last few years the automobile design process is asked to become more responsible and responsibly related to environmental needs.

Basing the automotive design not only on the appearance, the visual appearance of the vehicle needs to be thought together and deeply integrated with the "power" developed by the engine.

So, vehicle design is becoming more and more differentiated and the vehicle behavior does not actually meet one single standard but is following the market trends. The vehicles are being designed according to detailed specifications and the product is characterized by specific customer's profile looking for specific solutions to their own problems, which may be different for different customer's profile.

In this complex scenario the definition of niche product is becoming obsolete and the automobile market is becoming a sum of many and very different vehicle categories: micro car, city car, minivan, SUV, roadster.

Also technological needs are changing, and the race to luxury and big comfortable, high powered sedan is now leaving place to "smart" vehicles designed to look for an intelligent solution to different mobility problems.

Or at least this is how it should be.

The vehicle of the future, and the vehicle that customers are looking for nowadays, is designed upon the basic needs, starting the vehicle and subsystems design according to the main mission of the vehicle itself: carrying people and goods.

Many aspects are "fighting" each other in the "design process", spanning from economic/strategic needs (maintenance costs, taxes used to depend on engine displacement and/or insurance on power, parking areas, driving licenses, etc.) to emerging standards (The Corporate Average Fuel Economy CAFÉ, new rating method NCAP, EUROxx regulations, etc.) ending with more technological mission/comfort needs:

- Ergonomic needs
- Small vehicles for urban environment, to reduce traffic jams
- Fuel efficiency and pollution reduction
    - Lightweight

Microchip Ex. 1050, p. 9
Microchip v. Aptiv
IPR2024-00494

  - Alternative fuels
  - Vehicle usage optimization
  - Engine Downsizing
- Safety
- Performance
- Offering to the customer the capability of changing the vehicle configuration (seats, luggage)

The need of reducing pollution and fuel consumption then indicates technologies like Stop & start – Micro & mild hybrids, as suitable powertrain layouts, dramatically reducing pollution while in traffic jams, or allowing the downsizing of the thermal engine, while keeping the performance at an acceptable level.

All these considerations lead to the conclusion that the optimization of the vehicle can be done only by optimizing the entire system, not looking for the optimum solution in each single subsystem.

The purpose of this book is therefore to try to present the new technologies development scenario, and not to give any indication about the direction that should be given to the research in this complex and multi-disciplinary challenging field.

Marcello Chiaberge
Mechatronics Laboratory – Politecnico di Torino
Italy

Microchip Ex. 1050, p. 10
Microchip v. Aptiv
IPR2024-00494

Part 5

Infotainment and Navigation Systems

23

The Car Entertainment System

Niels Koch
Altran GmbH & Co. KG, Munich
Germany

1. Introduction

In recent years, we spent more and more time in our cars. So it became obvious to implement *Car Entertainment Systems* into the car for comfort and driver information. We can differ between driver information devices and passenger entertainment devices.

Car entertainment began with AM-reception. FM-tuners followed soon, with stereo sound, cassette players and CD-players to entertain passengers. Today we know a number of different analog- and digital broadcasting systems, such as DAB, DMB, DRM, DVB and player standards like MP3, MP4, DVD, BlueRay and many more, which are integrated into the car console. With the variety of different entertainment sources in the car, each passenger in the vehicle may wish for their own program. For this, rear-seat entertainment systems are implemented.

For driver information, modern navigation systems not only help to find the most efficient route, but also give an overview of traffic situation. New concepts of user interaction shall provide comfort and intuitive usage of the devices. So the man-machine-interface is an important marketing feature, on which car manufacture philosophy is mirrored. Touch-screens provide an intuitive operation as information and buttons merge to one device.

This Chapter is structured into different subsections, explaining the tool chain of vehicular entertainment systems from reception of radio waves, demodulation and distribution of signal to the audio and visual end.

We begin with a brief historical overview of car entertainment and show modern installations in contrast. In order to understand the evolution better, we give a list of existing broadcasting standards and explain tuner concepts and diversity reception to combat fading effects for analog and digital broadcasting systems.

When the signal is demodulated it needs to be distributed to the audio subsystem.

The audio system consists of amplifier, equalizer and loudspeakers. We unveil the secrets of high quality sound.

As passengers wish to get their own entertainment source, the distribution of these sources in a rear-seat entertainment system is described.

For driver information, navigation systems offer intelligent route guidance, road status and helpful information on and along the way. In the recent years the development of navigation systems is advancing. So the pro- and contras for portable navigators in contrast to integrated systems are discussed.

Microchip Ex. 1050, p. 12
Microchip v. Aptiv
IPR2024-00494

2. History of vehicular entertainment

From year 1920 onwards, broadcasting systems became popular. At these days, they were large devices with tube amplifiers, utilizing medium wave and short wave bands. It was common to integrate the radios into the furniture, e.g. sideboards.

Car manufacturers began very soon to install smaller, compact shortwave radios into their vehicles, e.g. Ford, Chevrolet, Daimler [Klawitter, 2005].

In the beginning of the car radio, tube amplified devices were used. These required high voltages and currents to operate. Their exhaust heat was very high. In harsh vehicular environment the robustness of the tubes were low, so the tuner device was installed on rubber bands and was cushioned. With the use of transistors the car radio devices became smaller and more rugged. From year 1950 onwards, technology provided printed circuit boards where modules could be manufactured in high volumes. The invention of small transistors as well as integrated circuits helped that sound broadcasting tuners could emerge rapidly.

A number of companies specialized in vehicular radio systems, some of them still exist. While first car tuners could only receive shortwave (SW) and medium wave bands (MW), the transistorized tuners could also receive ultra-shortwaves (VHF) with frequency modulation. With the utilization of the VHF-band using frequency modulated signals (FM) instead of amplitude modulation (AM), the car radio market began to rise exponentially from 1960 for about 30 years. In the 80th stereo sound entered the broadcasting world and some years after that virtual 3D sound. Due to the fact, that car manufactures began to integrate the radio into a complete car entertainment system, replaceable single devices nearly disappeared from the market by today.

With digital information, digital broadcasting systems were introduced into the market in the late 1990th. Digital Audio Broadcasting (DAB) and Digital Video Broadcasting (DVB) replace analog broadcasting systems steadily all over the world.

With the advert of digital satellite communication, a number of broadcasters started with large coverage broadcasting programs. One of the successors is Sirius, an US satellite broadcaster using low orbit satellites, covering the whole USA with a sheer vast number of programs for all tastes and genres. In Europe, all efforts failed, mainly to the fact that VHF-broadcasting stations are closely clustered providing an exceptionally good coverage. In addition, the number of different countries with different languages makes it difficult to provide a common program in Europe. Nowadays, Ondas Media S.A. is launching the first satellite based multilingual broadcasting system for Europe, currently running tests in Italy, Spain and France.

Mid of the 1990th car manufacturers began to focus on family suitable vehicles, known as Mini-Van for a larger group of people. As kids are quickly bored while driving, the need for more entertainment inside the car was required.

The beginning of rear-seat entertainment was comparably simple. Headphone jacks provided sound entertainment from the CD-player, while the driver could listen to sound broadcasting and use the navigation system independently. With the advert of DVDs, screens were needed to watch movies.

Very soon the request for a more divert entertainment program lead to separate screens in each backseat. Today we find an IP-based media-center connected to touch-screens and consoles, where each passenger can select its program individually or can play games against each other.

Microchip Ex. 1050, p. 13
Microchip v. Aptiv
IPR2024-00494

3. System overview

The entertainment system of a modern car can be described as a number of entertainment sources organized and embedded into the car interior infrastructure. One group of sources is broadcasted via radio frequency, e.g. sound broadcasting, TV, mobile phone signals. The other group of sources is found inside the vehicle, such as Compact Disc (CD), Digital Video Disc (DVD), MP3-player and more. Sound and video information are decoded and amplified and made audible on a loudspeaker system and made visible on displays.

The most popular entertainment source is the broadcasting sound radio. It offers a number of advantageous features in contrast to video sources. While driving, listening to a sound broadcasting program can be done in parallel, however watching DVD video is unlawful. Separate tuners with antennas attached cover different broadcasting standards and frequency ranges.

The processed sound and video information is then split to the speaker system and to the displays. For better sound sensation an equalization and amplification of the signal can be added before loudspeakers provide the sound.

For CD- or DVD players, a big portion of the existing architecture can be reused. A switch between broadcasting tuners and in-vehicle audio sources offers an efficient way, when only one entertainment source can be attended.

For rear-seat entertainment, where a variety of sources can be accessed individually by each rear-seat passenger, a number of switches must be added. A more clever way is to provide a media center. The handling of the whole entertainment system is done by a number of buttons and switches. A man-to-machine interface (MMI) interacts between devices and human, where a number of settings and selections can be made. In modern cars a sophisticated man-machine-interface provides information and settings. The MMI differs from car manufacturer to another widely, as there are no common rules and a lack of harmonization. Instead, the MMI appearance and handling became a marketing tool to distinguish between car manufacturers and brands.

With the advert of touch-screen displays, information and buttons merge to one device which helps to control functions more intuitively.

Figure 1 displays the architectural overview of a modern entertainment system.

A number of antennas feed the tuners, either for analog or digital broadcasting systems. A switch lets the user select between broadcasting systems and in-vehicle sources. All in common, these sources are demodulated to sound- and video information and made audible on loudspeakers and visible on displays.

4. Entertainment bus-architecture

Modern vehicles comprise various bus systems. The engine- and wheel controls require a very speedy bus to connect all control units to share information. Chassis controller, e.g. doors & windows, are networking with each other on another independent bus. On top of this, the entertainment system is organized in an individual bus. The interconnection of information from one bus-ring to another can be organized by gateways. These gateways filter the required information from one bus, re-code messages - if required - and transmit them to the other bus ring.

Microchip Ex. 1050, p. 14
Microchip v. Aptiv
IPR2024-00494

A typical bus architectures can be classified in 3 main groups and a variety of mixtures between these.
These main groups are:

- Star Network Architecture
- Ring Network Architecture
- Cascaded Network Architecture

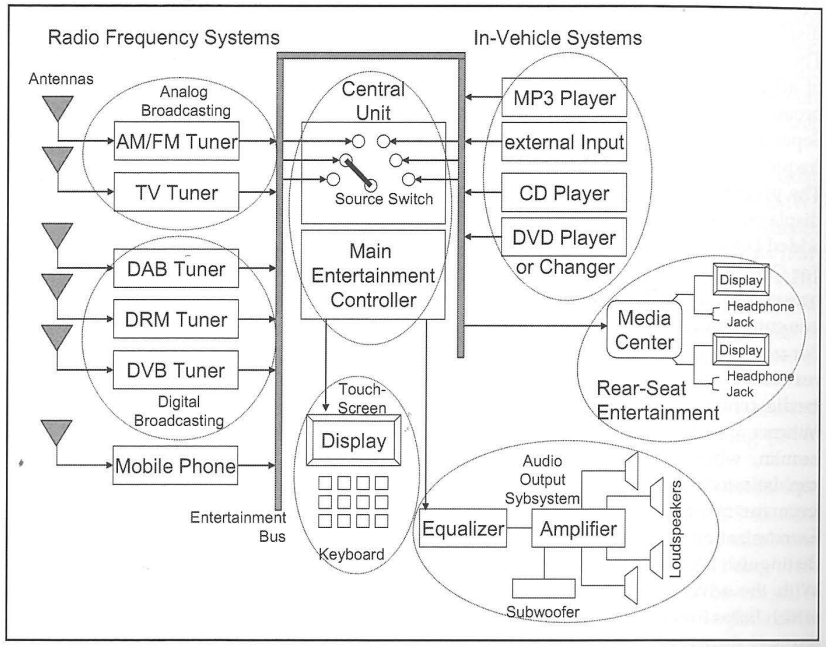

Fig. 1. Architectural overview of modern entertainment system

4.1 Star-network

In a star-network, there is one master controller unit, to which slave controllers are directly connected. Each slave operates on an individual connection to the master. The advantage of this is to provide an independent, dedicated connection. Especially when interference critical messages need to be transmitted, a dedicated connection provides security. In addition, star networks are used when high data rates are required. With the advert of separate dedicated connections full capacity can be used. Furthermore, star networks are used for parallel interactions, where time delays are critical.
The disadvantage is the high number of connections, which may lead to cabling problems in the harness and long routing lengths. With rising length of the cabling, the signal quality decreases due to electric losses, crosstalk and EMC-disturbances. Figure 2 shows an example of star network topology.

Microchip Ex. 1050, p. 15
Microchip v. Aptiv
IPR2024-00494

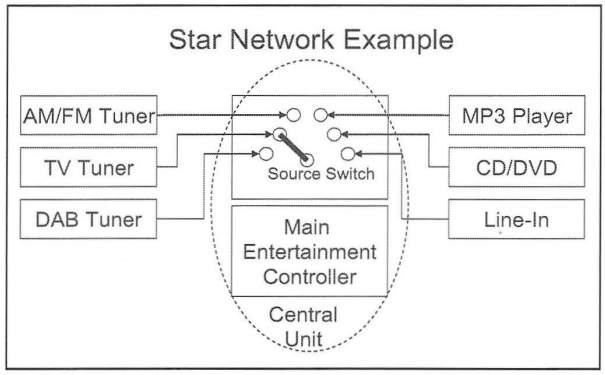

Fig. 2. Entertainment system organized in a star network architecture

4.2 Ring-network

In a ring network, all control units are connected with each other by its neighbouring device. The messages are read and pushed forward to the next device in the ring. All devices in the ring listen to all messages on the bus but react only when their specific address or keyword is recognized. This leads to a certain time delay from the sender to the receiver, depending on the individual processing time inside the control units and the number of devices between sender and receiver address.

When a device recognizes its address and keyword it begins to operate. The processing results are then re-broadcasted into the bus. The organization of the messages inside the bus can be very critical. The bus capacity can only exploited to a limit of 50%. Beyond this capacity limit the ring bus becomes increasingly instable.

During the development cycle of a car, requirements may change. Often new features must be added. While the ring-bus system runs well and stable with the old configuration, it is an often realized phenomenon that the new setup does not, although only one more function were added. Analyzing the problem in detail reveals timing problems.

To cope with this timing problem, the straight forward countermeasure is to re-sort the bus organization, so that more time is provided between specific messages. However, when capacity is becoming critical, time gaps cannot be added.

Next step would be to reduce the number broadcast messages. This gives capacity but other timing problems occur, as controllers wait for messages or frames to broadcast. A pile of unsent messages inside the controllers may lead to crashes and unwanted effects when FIFO-registers overflow.

Beside the advantage of ring networks where each controller has access to all messages, the inefficient capacity exploration and complicated message organization are the main reason against controller chains in ring structure. Figure 3 shows a ring network topology.

4.3 Cascaded network

Cascaded networks originally can be derived from star networks. Each branch is split and subdivided into arms. In a next tier, each arm can further subdivide into more arms. The

Microchip Ex. 1050, p. 16
Microchip v. Aptiv
IPR2024-00494

advantage is that each branch with its arms can be organized to a logical group, handled in parallel as well as sequential processing. Cascaded networks are hierarchical organizations in relation to function and competences of devices. Figure 4 shows a cascaded network topology.

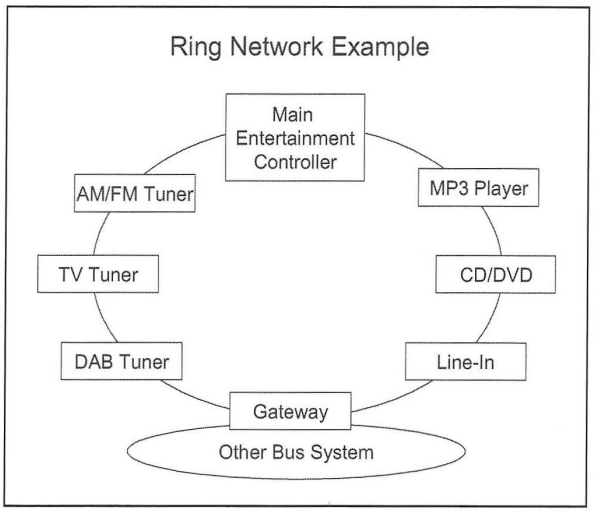

Fig. 3. Entertainment system organized in ring architecture

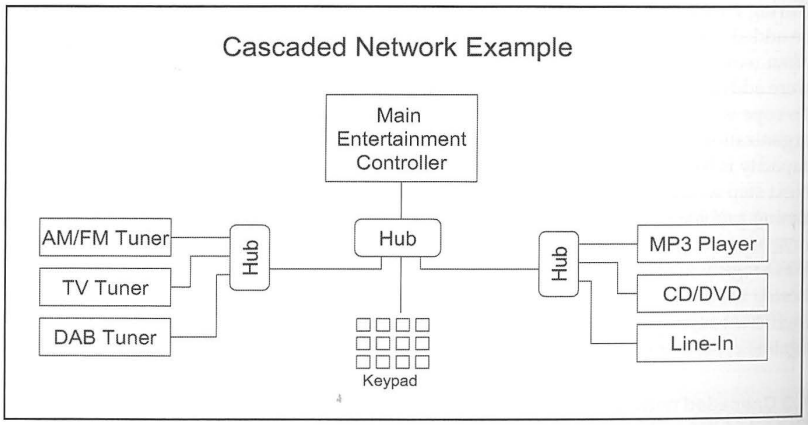

Fig. 4. Entertainment system organized in cascaded network architecture.

Microchip Ex. 1050, p. 17
Microchip v. Aptiv
IPR2024-00494

4.4 Mixed network topology

Analyzing existing car bus structures, a mix of network topologies can be found. Beside a master unit with branches (star network), a number of sub-branches can be found forming a logical group (branched network). In addition, some branches are connected to a ring of components (ring network). Figure 6 shows a possible mixed network.

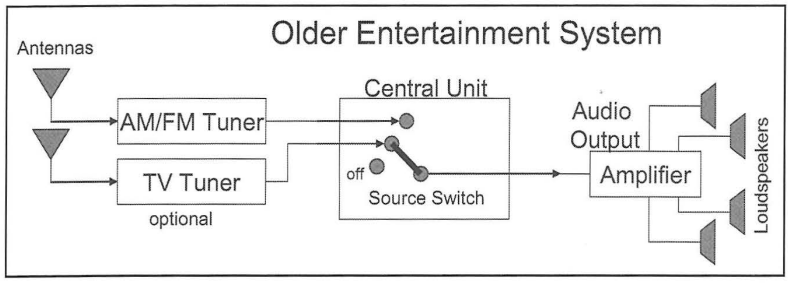

Fig. 5. Typical entertainment system for more than 30 years in the car industry

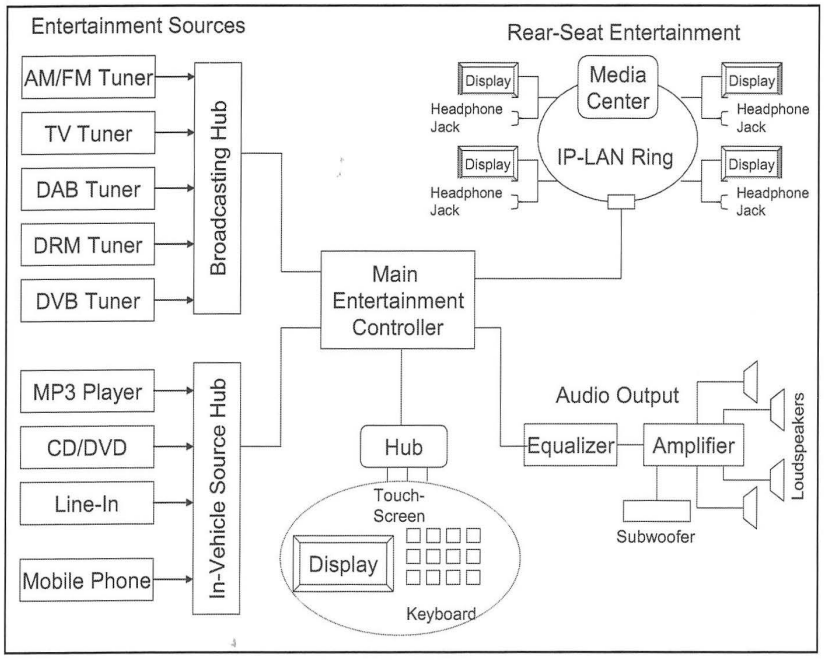

Fig. 6. A modern entertainment system organized around a main entertainment controller, usually installed into the central console of the car.

Microchip Ex. 1050, p. 18
Microchip v. Aptiv
IPR2024-00494

4.5 Older entertainment systems

For many years, the radio unit was the master, to which loudspeakers were directly connected. We had a classical star network. With the implementation of additional sound amplifiers and multi-way speaker systems, a branched cascaded topology can be seen.

With the introduction of CD/DVD-players or CD-changers as an additional master device, the topology became mixed up. With the number of different receiving systems for analog and digital broadcasting as well as the rising number of entertainment sources, the entertainment system became more and more confusing.

4.6 Modern entertainment system

Desired backward compability and required flexibility for customized options lead to a car-specific entertainment architecture in modern entertainment systems. For this, entertainment devices were organized to logical groups. However, technological development moved on, a higher integration of devices provided compact all-in-one devices, e.g. double tuners with CD-player. It became difficult to identify hierarchy structures, so devices were organized in ring bus structures.

The MOST-bus is a prominent entertainment ring bus with the use of lightwave cables. During the development of this bus system, capacity limits were not an issue. Some years later however, DVD-video signal transmission on the MOST-bus revealed that capacity is insufficient.

Furthermore, flexible additions to other entertainment sources with other standards led to problems. All devices in the chain needed software updates for new addresses and keywords. Testing effort explodes with a rising number of new devices and configurations.

Requirements for flexibility and scalability in addition to rising data rates offered only one way, back to branched star networks. The trend is using USB 2.0 connectivity in a cascaded star connection. As USB 2.0 offers up to 480 Mbit/s data capacity, is easily scalable. USB interconnection can attach a vast number of devices, so it fulfils all requirements. It is future safe for the next decade of years.

Figure 6 displays a modern car entertainment architecture based on USB 2.0 connectivity.

Entertainment sources, such as over-the-air broadcasting systems as well as in-vehicle sources, provide demodulated digital information on one USB-branch to the main entertainment controller.

Depending on the preference and selection of the user, these data can be streamed via the IP-based rear-seat entertainment ring or made audible on the vehicular loudspeaker system for all passengers inside the car.

As USB-connectivity is derived from the computer industry, user interactions by keypads, displays and touch-screens is straight forward and easy to implement.

With the USB-connection it is comparably easy installing external devices, such as mobile phones, mass storage devices and navigation systems.

5. Broadcasting systems

Broadcasting systems reign a long history so backward compability is a major requirement for modern cars. Although the number of mobile shortwave listeners is very limited, each car entertainment system offers shortwave-reception.

Microchip Ex. 1050, p. 19
Microchip v. Aptiv
IPR2024-00494

Table 1 summarizes the existing broadcasting systems.

System Name	Abbreviation	Frequency Band	Modulation
Long-Short-Medium Wave	LW/MW/SW	172 kHz - 30 MHz	Amplitude Modulation AM
Ultra short Wave	VHF	76 MHz - 109 MHz	Frequency Modulation FM
In-Band On-Channel	IBOC	76 MHz - 109 MHz	Quadratur Phase Shift Keying, QPSK
Digital Broadcasting System	DAB	174 MHz - 210 MHz	Orthogonal Frequency Division Multiplex, OFDM
Digital Broadcasting System with enhanced codec	DAB+	174 MHz - 210 MHz	Orthogonal Frequency Division Multiplex, OFDM
Digital Multimedia Broadcasting	DMB	174 MHz - 210 MHz	Orthogonal Frequency Division Multiplex, OFDM
terrestrial Digital Video Broadcasting	DVB-T	480 MHz - 860 MHz	Orthogonal Frequency Division Multiplex, OFDM
terrestrial Digital Video Broadcasting with enhanced codec	DVB-T2	480 MHz - 860 MHz	Orthogonal Frequency Division Multiplex, OFDM
Satellite Digital Audio Radio System	SDARS	2,30 GHz - 2,33 GHz	Orthogonal Frequency Division Multiplex, OFDM

Table 1. Overview of broadcasting systems

5.1 Short and medium wave bands

Short wave (SW) and medium wave (MW) band provide a worldwide coverage due to ground wave propagation and wave reflection at ionosphere layers in the atmosphere. As these layers are approximately 80 km to 300 km high, a large distance can be bridged. For large-area countries such as Australia, Brazil or Canada just to name a few, a nation-wide broadcasting coverage can easily be done on MW-bands. From history we adopted AM-modulated signals with relatively poor sound quality, compared to today's quality expectations.

5.2 Digital radio mondiale (DRM)

In order to overcome poor sound problems in SW/MW-bands, transmission became digital. Digital Radio Mondiale (DRM) decodes sound information to a digital data stream which is modulated with OFDM and broadcasted on SW/MW-bands. The receiver can decode this data stream and correct transmission errors. The sound quality is intuitively better than analog broadcasting but coverage is found to be reduced. That is mainly due to the fact that digital wireless systems have an abrupt go-nogo border, while analog systems degrade gradually until signals disappear in noise [Koch, 2008].

Microchip Ex. 1050, p. 20
Microchip v. Aptiv
IPR2024-00494

5.3 VHF-band and UHF-band

Around 1950, VHF-frequency spectrum was utilized in Europe. Radio propagation in 100-MHz-band can reach approximately 30% beyond the optical horizon, so called radio horizon. This leads to a limited coverage of sound or TV broadcasting stations. Depending on transmitter location and radiated transmit power the typical coverage area is about 100 km². For a nation wide broadcasting network, a high number of transmitters must be installed. Especially in hilly terrain uncovered areas occur due to radio shadows. When reception is needed there, filling transmitters are needed. On VHF-band (76-109 MHz) sound broadcasting is transmitted while on UHF-band (400-800 MHz) TV-broadcasting is located. Typically, a dual layer broadcasting network is rolled out in VHF- and UHF-bands. The first layer consists of transmitters with high power on prominent locations, covering a large area. The second layer fills coverage gaps with low-power transmitters.

As each transmitter requires a separate frequency in order not to interfere with each other, the dedicated frequency spectrum is quickly used up. Clever frequency allocation and frequency reuse is needed.

During a journey car passengers want to listen to the same broadcasting station, however receiving frequency changes from time to time according to coverage of transmitters. In year 1988, Radio Data System (RDS) was introduced to solve the problem that car drivers need to search for a new frequency in order to stay tuned to their broadcasting program, when leaving the coverage area of one transmitter to another.

RDS combined a number of functions. The most advantageous and intensely used function is the alternative frequency list (AF). Here a broadcasting station lists their alternative frequency where their program is also transmitted simultaneously. When reception becomes disturbed the tuner scans the alternative frequency list to find an undisturbed reception of the same program.

Other important functions are traffic announcements (TA) and traffic program (TP) to inform about traffic jams and road problems. Beside a number of other functions, text information can be displayed on the radio display, known as radio text, such as broadcasting station name, music title, interpret and many more. Especially Italian broadcasters explored capabilities of radio text functions and began to use it as advertising channel. Today it is quite common using radio text for a variety of information for the listener, e.g. stock exchange prices, weather forecasts or breaking news.

5.4 Digital broadcasting systems

In 1987 development of digital broadcasting systems began and a number of digital transmission standards derived since then. Digital Audio Broadcasting (DAB), former Eureka-147 Project, was the start into digital data processing and digital broadcasting transmission. DAB decodes sound information to a digital data stream which is modulated with 4-PSK-OFDM and broadcasted on VHF-band. The receiver can decode this data stream and correct transmission errors. The sound quality is intuitively better than analog broadcasting. Similar to all other digital wireless systems, DAB reception is experienced having an abrupt go-nogo border, which is often misunderstood that coverage is smaller than analog systems.

One of the benefits of digital broadcasting system is that more programs can be transmitted with one frequency allocation. While in analog broadcasting one radio station used one

Microchip Ex. 1050, p. 21
Microchip v. Aptiv
IPR2024-00494

frequency, now up to 64 radio stations can be received on one single frequency. This offered new broadcasting capacity for more divert channels covering more genres and clientele. Another benefit of digital transmission is the higher sound quality.
With better coding capabilities using MP3 and MP4 codecs a more efficient transmission could be implemented. Digital Multimedia Broadcasting (DMB) is using MP4 AAC+ codec in contrast to DAB, where MUSICAM codec is implemented. For video transmission, Digital Video Broadcasting (DVB) is used. DVB is similar to DAB and DMB, except that video signal compression H.264 is added to sound compression algorithms and higher intrinsic modulation schemes are used, often 16QAM-OFDM. DVB is successively replacing analog TV-transmitters in Europe.

5.5 IBOC system

In USA, another method of digitalisation is used. Beside the analog modulated signal, an additional digital modulated signal with same content is transmitted, so called in-band on channel (IBOC) signal. Figure 7 displays the spectrum of such an IBOC signal.
Having good reception, the tuner decodes the digital information and provides high-quality sound. Reaching the go-nogo-border of digital transmission, the tuner switches to traditional analog broadcast. The listener may observe a small degradation in sound quality but is still able to follow the program.
In Europe, IBOC was tested in Switzerland in a range limited test environment [Ruoss, 2008]. It is unlikely that IBOC will be introduced in Europe, as VHF-band channel raster of 200 kHz interferes with US-IBOC channel bandwidth requirements of 400 kHz. To fit into the existing channel raster, one of the redundant digital sidebands can be removed. This method is known as FMeXtra and is currently under test in a testbed [Henk,Hamelink, 2008].

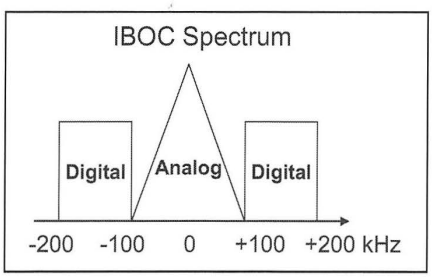

Fig. 7. Spectrum of IBOC system with analog and digital modulation containing identical information

5.6 Satellite Digital Audio Radio System (SDARS)

For large area countries such as Australia, Brazil, Canada, Russia or USA, just to name a few, traditional nationwide terrestrial broadcasting systems are very expensive to install. Using low orbit satellites offers an efficient nationwide coverage. In USA, Satellite Digital Audio Radio Systems (SDARS) in 2.3-GHz-band was implemented and succeeded with a sheer overwhelming number of different programs for all sorts of listeners. Even a monthly fee could not stop listeners to attend SDARS in USA.

Microchip Ex. 1050, p. 22
Microchip v. Aptiv
IPR2024-00494

6. Tuner concepts

With the invention of transistors small tuners could be made. A transistorized tuner was able to receive LW, MW, SW and VHF bands. Figure 8 shows a block diagram of such a tuner [Klawitter, 2005].
The radio signal from the antenna is bandpass (BP) filtered and amplified before it is mixed to an intermediate frequency (IF) of about 10 MHz. A switch selects between frequency bands and its receiving antennas. In most car radios this switch is identified as AM/FM button. The demodulator transforms the modulated signal to the baseband, where it is lowpass filtered (LP), amplified and the sound given on a loudspeaker.
This principal layout is found in all car tuners with minor modifications.

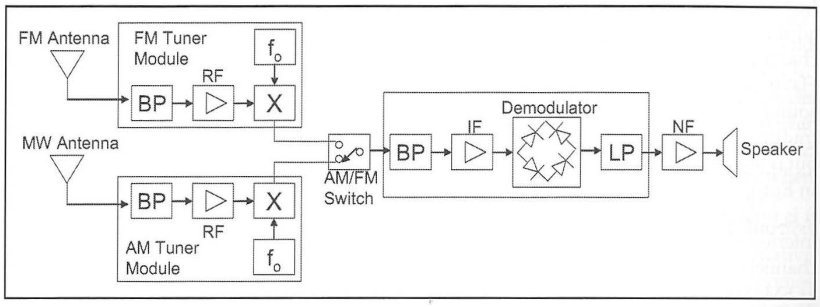

Fig. 8. Block diagram of a single tuner concept for VHF (FM) and MW (AM) reception

6.1 Double tuner concept

When the coverage area of a nationwide VHF-broadcasting station reaches its limit, another frequency must be searched by the listener in order not to change the program. By using two receivers at the same time (double tuner concept), it is possible to receive one program and scan for an alternative frequency, where the same program is distributed at the same time. RDS was used to transmit a list of alternative frequencies (AF) on which the secondary tuner was tuned to. When the signal of the main tuner became out of range, the output was switched to the second tuner which is already tuned to the alternative frequency by then. Now the other tuner searches the AF-list. By this method, continuous listening to a program was established.
Figure 9 shows a block diagram of a double-tuner concept utilizing RDS with alternative frequency selection.
Beside the RDS-Decoder for the AF-list which controls the frequency selection of the tuner modules, a portion of the demodulated signal is split and fed into another branch.
The feedback loop consists of a highpass (HP) filter with threshold-trigger. The HP-filter selects the noise in the audio signal. When a certain limit of noise intensity is reached the tuner selection switch is triggered to the alternative frequency of the other tuner. By this an seamless switching is applied.

Microchip Ex. 1050, p. 23
Microchip v. Aptiv
IPR2024-00494

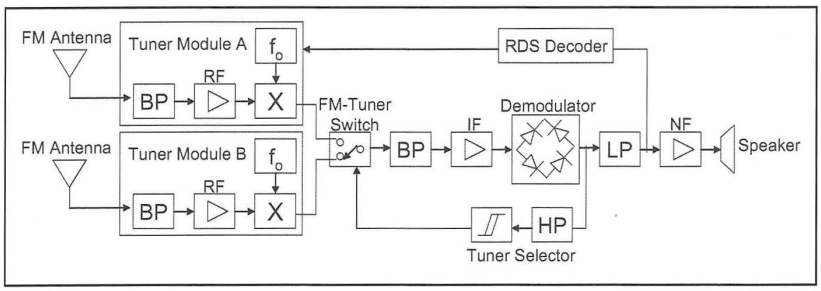

Fig. 9. Block diagram of double tuner concept for VHF (FM) reception utilizing RDS AF

6.2 Diversity - combating fading

In vehicular receiving environments fading of signals occur due to multipath reception. When a radio signal is transmitted, it reaches the receiver on a direct path as well as on reflected paths from buildings, landscape and obstructions, see Figure 10. The reflected paths reach the receiver at different times than the direct path. This leads to superposition of multiple signals of the same content. Signals can add or subtract each other at the receiving zone, leading to a varying loudness impression in amplitude modulated signals and signal dropouts in frequency modulated signal. In digital systems, bit errors can occur.

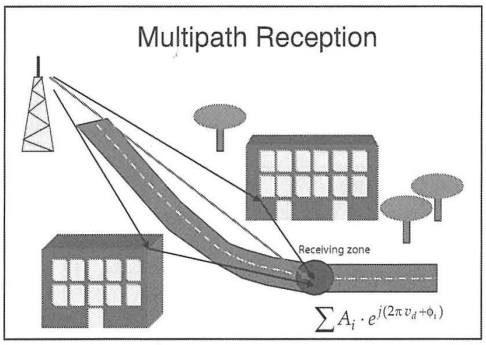

Fig. 10. Principle of multipath environment where transmitter signal is reflected, diffracted and attenuated by environment. At the receiving zone signal paths are summed.

A number of methods were invented to reduce the audible effect of multipath fading.
One method is to apply a number of receiving antennas on different positions of the car. Different antennas at different locations are assumed to receive different signal components. This effect is known as spatial diversity. A switch selects the best receiving antenna according to the signal strength and noise level. Figure 11 shows the principle of switching diversity for VHF-FM reception. Another method is to use both tuners in a dual-tuner concept which are connected to individual antennas. Due to the different location of the antennas phase differences occur which are corrected by phase shifters. Then, both phase

Microchip Ex. 1050, p. 24
Microchip v. Aptiv
IPR2024-00494

corrected receiving signals can be added in-phase and can prevent fading dropouts. This method is known as phase diversity.

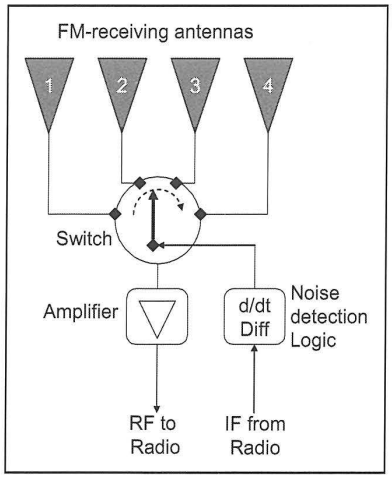

Fig. 11. Principle of switched diversity in modern tuners [Koch, 2008]

In digital broadcasting systems, bit streams can be combined to correct transmission errors. Here, two receivers operate individually but synchronized by internal clocks. The digital data streams are compared with each other and bit errors corrected when necessary. The combined data stream provides a more consistent data rate which results in a better quality of service for the listener. Figure 12 shows a principle bit stream diversity for DAB.

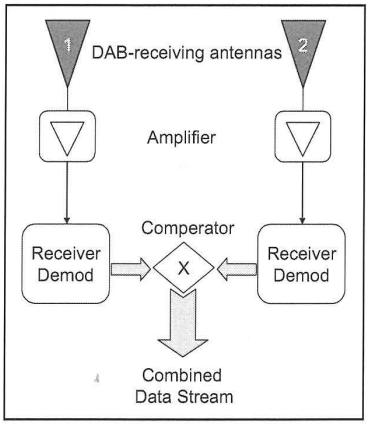

Fig. 12. Principle of bit stream combining method for digital broadcasting systems [Koch, 2008]

Microchip Ex. 1050, p. 25
Microchip v. Aptiv
IPR2024-00494

6.3 Triple tuner

However, when both tuners are used to receive the actual program in phase diversity configuration, a seamless switch to an alternative frequency is not possible when the coverage border is reached. Beside a number of switching algorithms, where one tuner is temporarily used to scan the AF-list, a more simple method was widely applied.

Adding a third tuner became easy when tuner modules were available as integrated circuits. Two tuners received the broadcasting signal on different antennas and utilizing diversity, while a third tuner scanned in the background for alternative frequencies.

At the end of a product lifecycle, cost reductions are the main focus of the industry. In order to reduce costs, the diversity reception was transferred to the antenna amplifier, where a switch could select the best receiving signal between up to 4 antennas. By this, only one tuner module was needed as main receiver. Each manufacturer followed a different concept, so that a general best-practice is not given.

For background scan of the AF-list a simple secondary tuner was applied by some manufacturers and connected to one of the diversity receiving antennas. As 5-inch or 7-inch color LCD-displays became cheap, all receivable stations could be shown at the same time to the user. So the station list needs to be updated periodically, which is done by an additional tuner. This triple tuner concept was also applied in TV broadcasting receivers.

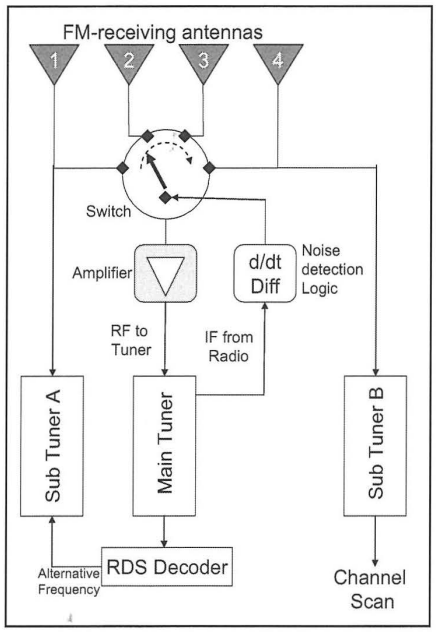

Fig. 13. Principle of switched diversity in modern tuners

Microchip Ex. 1050, p. 26
Microchip v. Aptiv
IPR2024-00494

6.4 Software defined radio

With the digitalization of the broadcasting world more and more fast working microcontrollers replaced discrete electronic elements and a number of modules were reduced to a single integrated circuit.

Following this trend, it seemed obvious that processing the signal is made in software. Nowadays, Software Defined Radios (SDR) are the big playground of the car electronic manufacturers.

In contrast to traditional tuner concepts, the SDR concept digitizes a frequency band and extracts and demodulates the wanted signals by digital filters and signal processors. With SDR it is possible to create a multi-standard receiver for all existing and upcoming broadcasting standards, analog or digital. It is also possible to exploit multipath reception by applying MIMO concepts.

7. Sound amplifier, equalizer and speakers

One of the important parts in the whole entertainment tool chain is the audio output. Often it is seen that expensive CD/DVD-player equipment is installed but the audio output end is culpable neglected. Figure 14 shows a block diagram of a modern sound system.

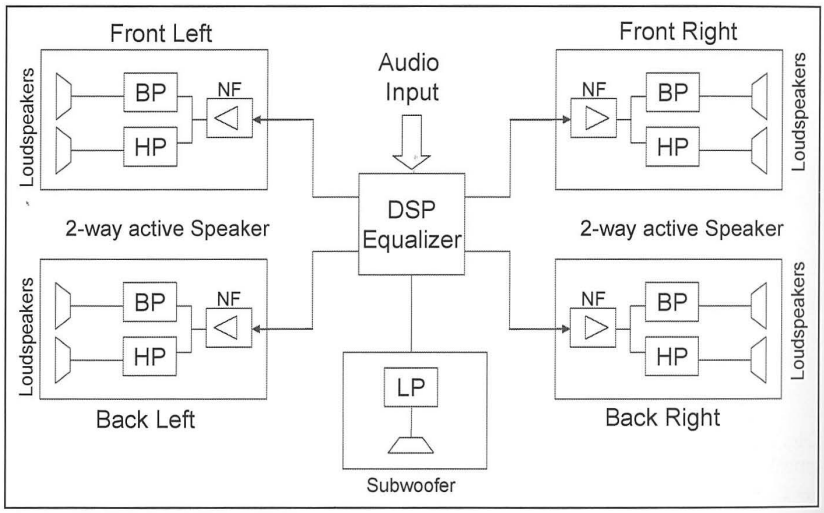

Fig. 14. Block diagram of modern sound system

The audio signal is fed to a digital signal processor (DSP) which acts as equalizer and delay line. In addition, virtual 3D-sound can be calculated in the DSP. The audio signal is then split into 4 branches for stereo sound into a left and right sided branch, as well as covering front passengers and rear-seat passengers. It is also possible to connect all four speakers to provide surround sound. Active 2-way speakers are very common.

Microchip Ex. 1050, p. 27
Microchip v. Aptiv
IPR2024-00494

The principles of a good sound output are comparably easy and similar for digital and analog sources. Three key-issues need to be respected:

1. frequency response of speakers matching the human perception response
2. maximally flat phase response leading to a low group delay
3. echo reduced environment

The loudspeaker itself has a frequency response, meaning that the loudspeaker is resonant for some audio frequencies, depending on the construction and type of speaker. They can be classified to bass speakers, where only very low end frequencies are audible, mid range speakers and high tone speakers, where only the highest tones are transmitted. Beside these band-limited speakers many vendors offer broadband loudspeakers, which try to transmit a broad range of the audible spectrum. Either the speaker is shifted downwards to the lower end spectrum, neglecting the upper part or wise versa. Due to the mechanical limits in construction of broadband speakers, the frequency response is rippled and not flat, meaning some frequencies are exposed while others are reduced. Figure 15 shows typical 2-way loudspeakers covering the midrange and high tones, while the bass is covered by a single bass speaker, known as subwoofer. The source of very low frequencies cannot be detected by the human ear, therefore only a single bass speaker is sufficient and its position is uncritical.

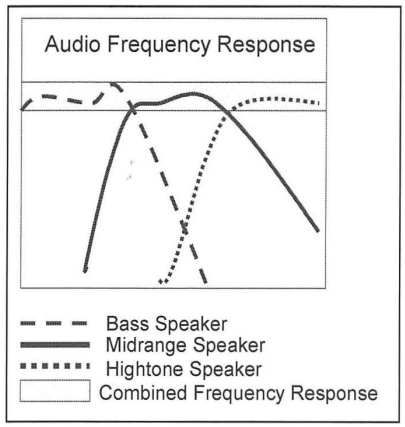

Fig. 15. Typical frequency responses for a 2-way speaker with bass-reflex booster and 3-way speaker systems

The environment in which the speaker operates influences the frequency response of the individual speaker. When the environment is comparably rigid the frequency response shifts to lower frequency band, similar a spring-mass-system where the mass is raised. The volume of the surrounding offers resonances which disturb the frequency responses of the speakers. A good sound system offers a matched frequency response similar the human perception. In order to compensate the deficiency of the speakers and the surroundings, an equalizer corrects this. Equalizing the interior of a vehicle is time consuming and most often a compromise.

Microchip Ex. 1050, p. 28
Microchip v. Aptiv
IPR2024-00494

Another key factor is that frequencies reach the ear at about the same time. This part is often neglected. For a natural sound impression it is obvious that not only the sound representation shall be matched but also the phase representation, known as group delay response.

When loudspeakers transmit from a different distance to the listener, transmission delays occur. These delays can be compensated by delay lines in the equalizer. The speaker close to the listener will be delayed, so that sounds from all speakers reach the ear at approximately the same time. When sounds are reflected inside the car more delay is seen. The human hearing system can compensate a certain sound delay, beyond that it becomes recognized as echoes. Echoes are annoying.

Taking the interior of a car into account, speakers must be placed cleverly. On the one hand it is necessary that sound reaches the human head directly. On the other hand, echoes must be reduced. Which is quite simple for one person inside the car, the job becomes difficult for all passengers. As this is mostly a compromise between frequency response, group delay response and echoes, some car manufacturers tune the sound to certain positions. For self-driving cars, the focus is the driver and the front passenger, for high-class limousines with backseat passengers, the focus is on rear seats. Some manufacturers offer to change these settings.

While regular sound systems provide single broadband speakers, higher class sound systems offer at least dual-way - or better - triple-way speaker systems.

Here, a lowpass filter, a bandpass and a highpass filter separates the audio spectrum according to their speaker frequency responses. Adding all frequency responses shall provide a maximally flat response.

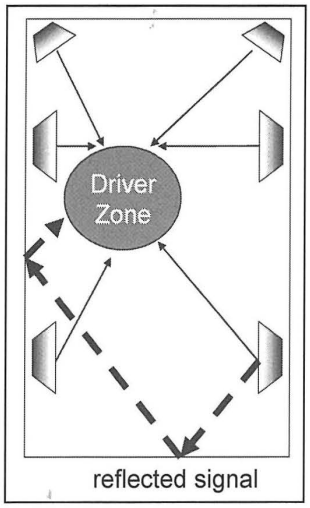

Fig. 16. Typical audio loudspeaker distribution inside the car, exhibit direct signals and reflected signals

Microchip Ex. 1050, p. 29
Microchip v. Aptiv
IPR2024-00494

8. Rear-Seat entertainment

Figure 17 displays a modern layout of a rear-seat entertainment system.

The media center consists of a computer with a harddrive, on which sound MP3, video MP4 and computer games, e.g. chess, are stored. The console is connected to the media center by USB 2.0 interface and interacts similar a monitor, keyboard and mouse. Today we find touch-screens to combine controls and monitor in a space-efficient manner.

The advantage of USB-interface is its scalability for a number of passenger consoles with individual entertainment program. In a basic configuration, up to 4 consoles can be connected simultaneously. For more, cascades of USB-hubs are needed. As each USB-interface has its own addressing, the limit of parallel streams is just given by the computer power. Each USB 2.0 connection can handle a datastream up to 480 Mbit/s. The length of the cable is limited to 10 meters.

The disadvantage of cascaded star-connected entertainment systems is a rising number of cables in the vehicle, especially at the media center, where all connections are concentrated. Crosstalk and EMC problems are very common then. Therefore it is advisable to use shielded cables with ground connection.

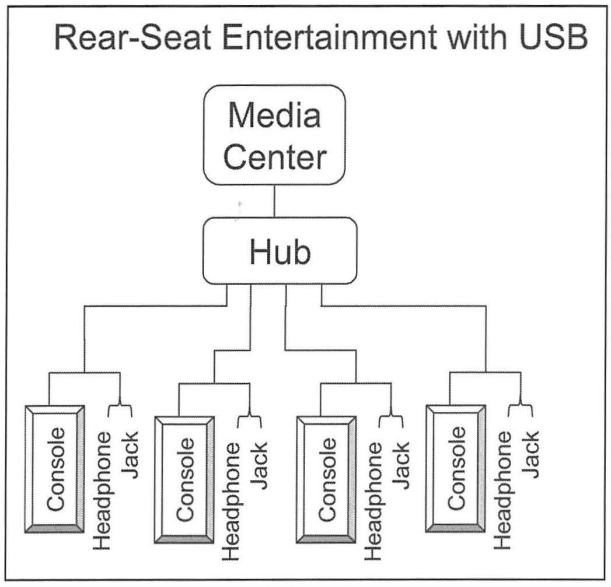

Fig. 17. Block diagram of a modern rear-seat entertainment system based on USB 2.0

Alternatively, a ring-bus structure can be applied, where each console is connected to the media center in a loop, see Figure 6. Although the IP-based ring structure reduces the cabling effort, the bottleneck is the bandwidth limit. While USB 2.0 can handle up to 480 Mbit/s per connection, the regular IP-LAN handles 100 Mbit/s for all connected consoles. Gigabit-LANs may solve the bandwidth limitations for a short time. With rising data rates

Microchip Ex. 1050, p. 30
Microchip v. Aptiv
IPR2024-00494

and consoles, the bandwidth is quickly exhausted. In addition, cabling distance for GBit-LANs is also limited. Inside a vehicle, a cabling length of 50 meters or more is not unusual for ring-networks. When the entertainment ring is opened at any point, the whole entertainment program is interrupted.

9. Navigation system

It was a long dream of mankind to navigate effortless to any destination. Since end of 1990th, we have adapted a satellite position determination free of charge from the US military, called Global Positioning System (GPS). Since then, the navigation market raised rapidly. Today we know navigator mobile phones, portable car-retrofit devices and sophisticated in-vehicle map navigation. The Russian GLONASS satellite system has been offered as alternative to the US-system but never reached the awareness limit. In addition, European countries joined to setup their own navigation system GALILEO in opposition to GPS. At the time of this book is written, Galileo satellite system is still years away to come. Hence, we concentrate on GPS in this chapter.

For GPS, low orbit satellites fly around the earth in such a way and number that at any point on the surface, minimum 3 satellites are in communication range to the receiver. Each satellite transmits a unique pseudo-noise data stream which is synchronized with an atomic clock. Inside the data stream satellite orbital information are implemented as well as timestamps. The receiver can synchronize to the data streams and calculates the position by time-differences between timestamps and orbital data. With 3 or more such time differences and orbital information, the position on earth can be determined.

With the position information and a destination coordinate, a route can be calculated. Today we know a number of vectorized digital maps. Some of them are free of charge, some require a license agreement.

The car industry offers a specific roadmap for their fleet. Beside the vector map, a number of additional layers are offered, e.g. petrol stations, fleet repair stations, museums, hotels, restaurants, car parks, etc. known as Point of Interest (POI). These map information are regularly updated.

As the vector map base is mostly identical, car manufacturers differ between the qualities of POIs, which becomes a unique selling point. Furthermore, the algorithm to calculate the best route from actual position to destination is one of the important features to distinguish between good and better systems. There are not only shortest route and fastest route available, but in future more in concern becomes the most economic route with a number of parameters, such as fuel consumption for regular engine cars, electric power consumption for electric vehicles and hybrid cars as well as CO_2-footprint, just to address the most popular.

Today we find a number of portable external navigation systems by vendors beyond the car industry. These gadgets are comparably easy to operate and often battery powered. Mobile phones or so called smartphones offer all capabilities needed for guidance by map and voice commands. For these external devices, cabling effort is very limited to DC-power only. An external GPS-antenna is not necessarily required as the reception through regular windscreen glass is sufficient in most of the cases. When sun protective metalized windows are installed in the car, GPS-reception may be disturbed. In this exception an external GPS-antenna is needed.

Microchip Ex. 1050, p. 31
Microchip v. Aptiv
IPR2024-00494

Comparing performance for vehicle installed navigation systems with portable external devices the cost difference is hard to explain to customers as both work equally well. However, the internal system can compensate navigation errors with wheel speed and steering angle even when GPS-reception is not available for some distance, e.g. in tunnels.
The upcoming trend in the car industry is to provide interfaces for mobile phones. That means for instance that a smartphone can connect by Bluetooth or USB 2.0 to the vehicular internal GPS-positioning data, which is backed up by wheel speed and steering angles. This enables the phone to be used as hands-free telephone as well as a portable navigation system, having excellent GPS-reception and precise position. The costs and effort for a navigation computer, user interface and map updates are reduced. On top of this, it gives customers the flexibility using any phone model and is future safe.

10. Outlook and future trends

From the performance point of view, a lot can be optimized in the entertainment system in the future. Especially broadcasting reception is deemed to be improved. Historically, the tuner was installed in the center console, while the receiving antenna was on the fender. The cable length was comparably short. Modern cars however offer a number of receiving antennas for diversity reception in the rear-window, side-window, bumper and fender for instance. Long cabling ways attenuate RF signals.
The wide range of broadcasting standards requires multiple tuners buried in the car. Integration and size reduction is a major playground in R&D departments. Transceivers of modern mobile phones are approximately 30x30 mm² or less and 3 mm thick, offering multi-frequency and multi-standard operation already. With SDR-tuners it will become possible in near future to provide compact multi-standard broadcasting receivers exploiting diversity gain by MIMO concepts. This allows integrating such receivers into - or at least close to - the antennas. Reception performance will improve drastically unless EMC problems occur.
Another mega trend of this decade is a permanent internet connection. With UMTS and WLAN it is already possible to connect laptops and mobile phones to the internet while riding in car. In near future, the vehicle itself gets connected to the internet. Upcoming mobile phone standard Long-Term Evolution (LTE) will support this trend. The merge of internet services and vehicular entertainment functionality will provide efficiency and convenience to the passengers. The sheer endless list of new service ideas for the drivers and passengers is overwhelming and becoming unique selling points for car manufactures. They will offer new services to drivers, from intelligent traffic routing, parking aid to firmware updates inside the car. Passengers will be able to stream music and videos as well as communicate while surfing the internet.

11. References

Henk, C.M, Hamelink, S.G (2008). FMeXtra – the Principle and its Application, *9th Workshop Digital Broadcasting*, Fraunhofer Institute IIS Erlangen, Germany

Klawitter, G. (2005). Autoradios, Siebel Verlag, ISBN 3-88180-644-x, Verlag für Technik und Handwerk, Baden-Baden, Germany

Microchip Ex. 1050, p. 32
Microchip v. Aptiv
IPR2024-00494

Koch, N. (2008). Diversity for DAB – Worth the Effort?, *9th Workshop Digital Broadcasting*, Fraunhofer Institute IIS Erlangen, Germany

Ruoss, M. (2008). The Digitalization of the FM-Band in Europe, *9th Workshop Digital Broadcasting*, Fraunhofer Institute IIS Erlangen, Germany

Microchip Ex. 1050, p. 33
Microchip v. Aptiv
IPR2024-00494

NEW TRENDS AND DEVELOPMENTS IN

AUTOMOTIVE SYSTEM ENGINEERING

Edited by **Marcello Chiaberge**

Marcello Chiaberge is assistant professor at Electronic Department of Politecnico di Torino and vice-director of Centro per i Servizi di Prototipazione of Politecnico di Torino, where he is also responsible and coordinator of the Electronic Group at Mechatronics Laboratory (LIM) of Politecnico di Torino. His research interests are: hardware implementation of neural networks and fuzzy systems, design and implementation of reconfigurable computing architectures for hard-real-time control systems, design and implementation of hybrid control systems based on programmable state-of-the-art devices (DSP, FPGA and FPAA), implementation of fault-tolerance communication networks based on plastic optical fibers (POF). Another research field is the design and implementation of non-conventional power driver systems for special actuaction systems in the automotive, industrial and space fields of application. He is also involved in the design and control of small rovers for space exploration, archeological prospecting and humanitarian/anti-terrorism application in collaboration with Piedmont Region, Thales Alenia Space and Italian Space Agency (ASI). Chiaberge is an IEEE member, the author of more than 60 articles accepted in international conferences and reviews and a co-author of 7 international patents.

US$ 150.00

ISBN 978-953-307-517-4

9 789533 075174

INTECH

open science | open minds

INTECHOPEN.COM

Microchip Ex. 1050, p. 34
Microchip v. Aptiv
IPR2024-00494