19-4206; Rev 0; 8/08

EVALUATION KIT AVAILABLE

USB 2.0 Hi-Speed 2-of-4 Crosspoint Switch

MAX4989

General Description

The MAX4989 is a bidirectional 2-of-4 USB 2.0 crosspoint switch. The MAX4989 features the low on-capacitance and low on-resistance necessary to switch USB 2.0 low-/full-/Hi-Speed signals at data rates up to 480Mbps. This device allows any 2-of-4 USB pairs to be connected together and is configured through a simple 3-input control logic interface.

The MAX4989 operates from a single +2.7V to +5.5V supply and features an internal charge pump to permit full rail-to-rail swing. This device also features a high-impedance shutdown mode to reduce supply current to 100nA (typ).

The MAX4989 is available in a 14-pin, 3mm x 3mm TDFN package and operates over the extended -40°C to +85°C temperature range.

Features

- **Single +2.7V to +5.5V Supply Voltage**
- **Low 1µA (typ) Supply Current**
- **-3dB Bandwidth: 1GHz (typ)**
- **Low 5Ω (typ) R_{ON}**
- **High-Impedance Shutdown Mode**
- **Logic Inputs Control Signal Routing**
- **+1.8V CMOS-Logic Compatible**
- **Ultra-Small 14-Pin, 3mm x 3mm, TDFN Package**

Applications

Notebook Computers

Cell Phones

Ordering Information

PART	TEMP RANGE	PIN-PACKAGE	PKG CODE
MAX4989ETD+	-40°C to +85°C	14 TDFN-EP* (3mm x 3mm)	T1433-2

+Denotes a lead-free/RoHS-compliant package.
**EP = Exposed pad.*

Pin Configuration

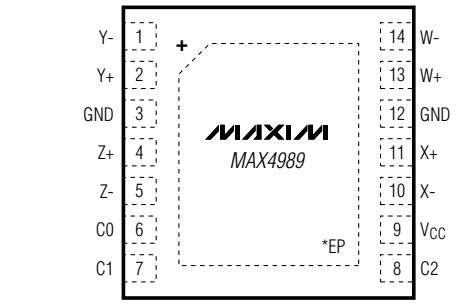

3mm x 3mm TDFN

*EP = EXPOSED PAD. CONNECT EP TO GROUND.

For pricing, delivery, and ordering information, please contact Maxim Direct at 1-888-629-4642, or visit Maxim's website at www.maxim-ic.com.

Microchip Ex. 1063, p. 1
Microchip v. Aptiv
IPR2024-00494

USB 2.0 Hi-Speed 2-of-4 Crosspoint Switch

ABSOLUTE MAXIMUM RATINGS

(Voltages referenced to GND.)
V_{CC} ..... -0.3V to +6.0V
C_ ..... -0.3V to +6.0V
W_, X_, Y_, Z_ ..... -0.3V to (V_{CC} + 0.3V)
Continuous Current C_ ..... ±30mA
Continuous Current W_, X_, Y_, Z_..... ±120mA
Peak Current W_, X_, Y_, Z_
(pulsed at 1ms, 10% duty cycle) ..... ±240mA
Continuous Power Dissipation (T_A = +70°C)
14-Pin TDFN (derate 24.4mW/°C above +70°C) 1951mW
Junction-to-Case Thermal Resistance (Θ_{JC}) (Note 1)
14-Pin TDFN ..... 8°C/W
Junction-to-Ambient Thermal Resistance (Θ_{JA}) (Note 1)
14-Pin TDFN ..... 41°C/W
Operating Temperature Range ..... -40°C to +85°C
Junction Temperature ..... +150°C
Storage Temperature Range ..... -65°C to +150°C
Lead Temperature (soldering, 10s) .....+300°C

Note 1: Package thermal resistances were obtained using the method described in JEDEC specification JESD51-7, using a 4-layer board. For detailed information on package thermal considerations, refer to **www.maxim-ic.com/thermal-tutorial**.

Stresses beyond those listed under "Absolute Maximum Ratings" may cause permanent damage to the device. These are stress ratings only, and functional operation of the device at these or any other conditions beyond those indicated in the operational sections of the specifications is not implied. Exposure to absolute maximum rating conditions for extended periods may affect device reliability.

ELECTRICAL CHARACTERISTICS

(V_{CC} = +2.7V to +5.5V, T_A = -40°C to +85°C, unless otherwise noted. Typical values are at V_{CC} = +3.3V, T_A = +25°C.) (Note 2)

PARAMETER	SYMBOL	CONDITIONS		MIN	TYP	MAX	UNITS
Operating Power-Supply Range	V_{CC}			2.7		5.5	V
Supply Current	I_{CC}	Switch enabled	V_{CC} = +3.3V		1	3.5	µA
			V_{CC} = +5.5V		3	6.5	
Shutdown Supply Current	I_{SHDN}	C1 = C2 = C3 = GND or V_{CC}			0.1	0.5	µA
Analog Signal Range	$V_{W_}$, $V_{X_}$, $V_{Y_}$,$V_{Z_}$			0		V_{CC}	V
On-Resistance	R_{ON}	V_{IN} = +3.0V, I_{OUT} = 10mA (Note 3)			5	9	Ω
On-Resistance Match Between Channels	ΔR_{ON}	V_{CC} = +3.3V, V_{IN} = +1.5V, I_{OUT} = 10mA (Note 3)			0.5		Ω
On-Resistance Flatness	R_{FLAT}	V_{CC} = +3.3V, V_{IN} = 0V to V_{CC}, I_{OUT} = 10mA (Notes 3, 4, 5)			0.4		Ω
Off-Leakage Current	$I_{IN(OFF)}$	V_{CC} = +5.5V, V_{IN} = 0V or V_{CC}, V_{OUT} = V_{CC} or 0V or unconnected (Note 3)		-1		+1	µA
On-Leakage Current	$I_{IN(ON)}$	V_{CC} = +5.5V, V_{IN} = 0V or V_{CC}, V_{OUT} = unconnected (Note 3)		-1		+1	µA
AC PERFORMANCE (Note 4)							
On-Channel -3dB Bandwidth	BW	R_L = R_S = 50Ω, V_{IN} = 0dBm, Figure 1			1		GHz
Insertion Loss	S_{12}	R_L = R_S = 50Ω, f = 10MHz			0.5		dB
Off-Isolation (Note 3) Figure 1	V_{ISO}	f = 10MHz, V_{IN} = 0dBm, R_L = R_S = 50Ω			-43		dB
		f = 250MHz, V_{IN} = 0dBm, R_L = R_S = 50Ω			-15		
Crosstalk	V_{CT}	f = 50MHz, V_{IN} = 0dBm, R_L = R_S = 50Ω, between adjacent pairs (Note 3), Figure 1			-50		dB

Microchip Ex. 1063, p. 2
Microchip v. Aptiv
IPR2024-00494

ELECTRICAL CHARACTERISTICS (continued)

(V_{CC} = +2.7V to +5.5V, T_A = -40°C to +85°C, unless otherwise noted. Typical values are at V_{CC} = +3.3V, T_A = +25°C.) (Note 2)

PARAMETER	SYMBOL	CONDITIONS	MIN	TYP	MAX	UNITS
DYNAMIC (Note 4)						
Turn-On Time	t_{ON}	V_{IN} = +1.5V, R_L = 300Ω, C_L = 35pF, $V_{C_}$ = 0V to V_{CC}, Figure 2		15	100	µs
Turn-Off Time	t_{OFF}	V_{IN} = +1.5V, R_L = 300Ω, C_L = 35pF, $V_{C_}$ = 0V to V_{CC}, Figure 2		2	6	µs
Propagation Delay	t_{PLH}, t_{PHL}	R_L = R_S = 50Ω, Figure 3		120		ps
Output Skew Between Switches	$t_{SK(O)}$	R_L = R_S = 50Ω, Figure 3		50		ps
Output Skew Same Switch	$t_{SK(P)}$	R_L = R_S = 50Ω, Figure 3		50		ps
Off-Capacitance	C_{OFF}	f = 1MHz, V_{BIAS} = 0V, V_{IN} = 0.5V_{P-P}		13.5		pF
		f at -3dB = 240MHz, V_{BIAS} = 0V, V_{IN} = 0.5V_{P-P}		4		
On-Capacitance	C_{ON}	f = 1MHz, V_{BIAS} = 0V, V_{IN} = 0.5V_{P-P}		6		pF
		f at -3dB = 240MHz, V_{BIAS} = 0V, V_{IN} = 0.5V_{P-P}				
LOGIC INPUTS						
Input Logic High	V_{IH}		1.7			V
Input Logic Low	V_{IL}				0.5	V
Input Logic Hysteresis	V_{HYST}			75		mV
Input Leakage Current	I_{IN}	V_{CC} = +5.5V, $V_{C_}$= GND or V_{CC}	-1		+1	µA

Note 2: All devices are 100% production tested at T_A = +25°C. All temperature limits are guaranteed by design.
Note 3: IN and OUT refer to input and output terminals (W_, X_, Y_, Z_) of any switch configuration.
Note 4: Not production tested. Guaranteed by design.
Note 5: Flatness is defined as the difference between the maximum and minimum value of on-resistance, as measured over specified analog signal ranges.

Microchip Ex. 1063, p. 3
Microchip v. Aptiv
IPR2024-00494

USB 2.0 Hi-Speed 2-of-4 Crosspoint Switch

Test Circuits/Timing Diagrams

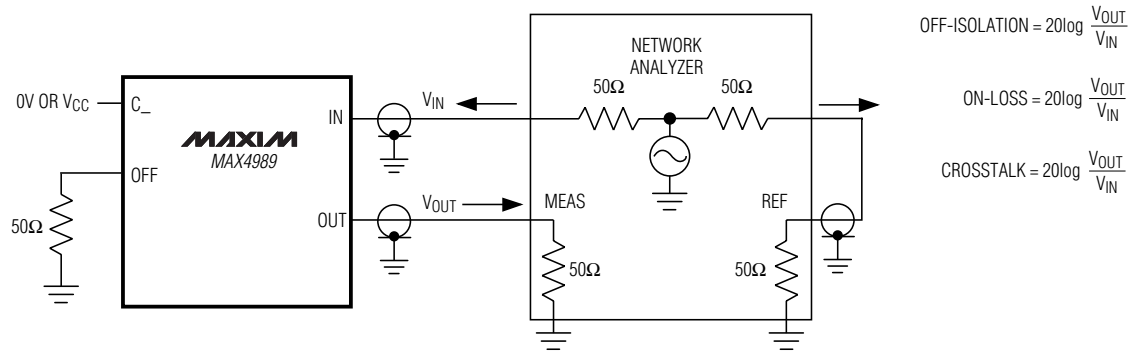

IN, OUT, AND OFF DEPEND ON SWITCH CONFIGURATION.
MEASUREMENTS ARE STANDARDIZED AGAINST SHORTS AT IC TERMINALS.
OFF-ISOLATION IS MEASURED BETWEEN IN AND OFF TERMINAL ON EACH SWITCH.
ON-LOSS IS MEASURED BETWEEN IN AND OUT TERMINAL ON EACH SWITCH.
CROSSTALK IS MEASURED FROM ONE CHANNEL TO THE OTHER CHANNEL.
SIGNAL DIRECTION THROUGH SWITCH IS REVERSED; WORST VALUES ARE RECORDED.

Figure 1. On-Loss, Off-Isolation, and Crosstalk

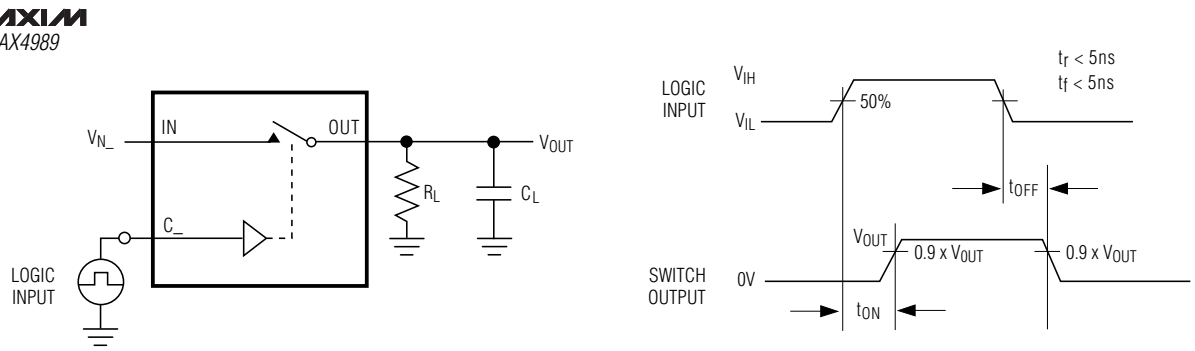

C_L INCLUDES FIXTURE AND STRAY CAPACITANCE.

$V_{OUT} = V_{IN}\left(\frac{R_L}{R_L + R_{ON}}\right)$

IN AND OUT DEPEND ON SWITCH CONFIGURATION.

Figure 2. Switching Time

Microchip Ex. 1063, p. 4
Microchip v. Aptiv
IPR2024-00494

Test Circuits/Timing Diagrams (continued)

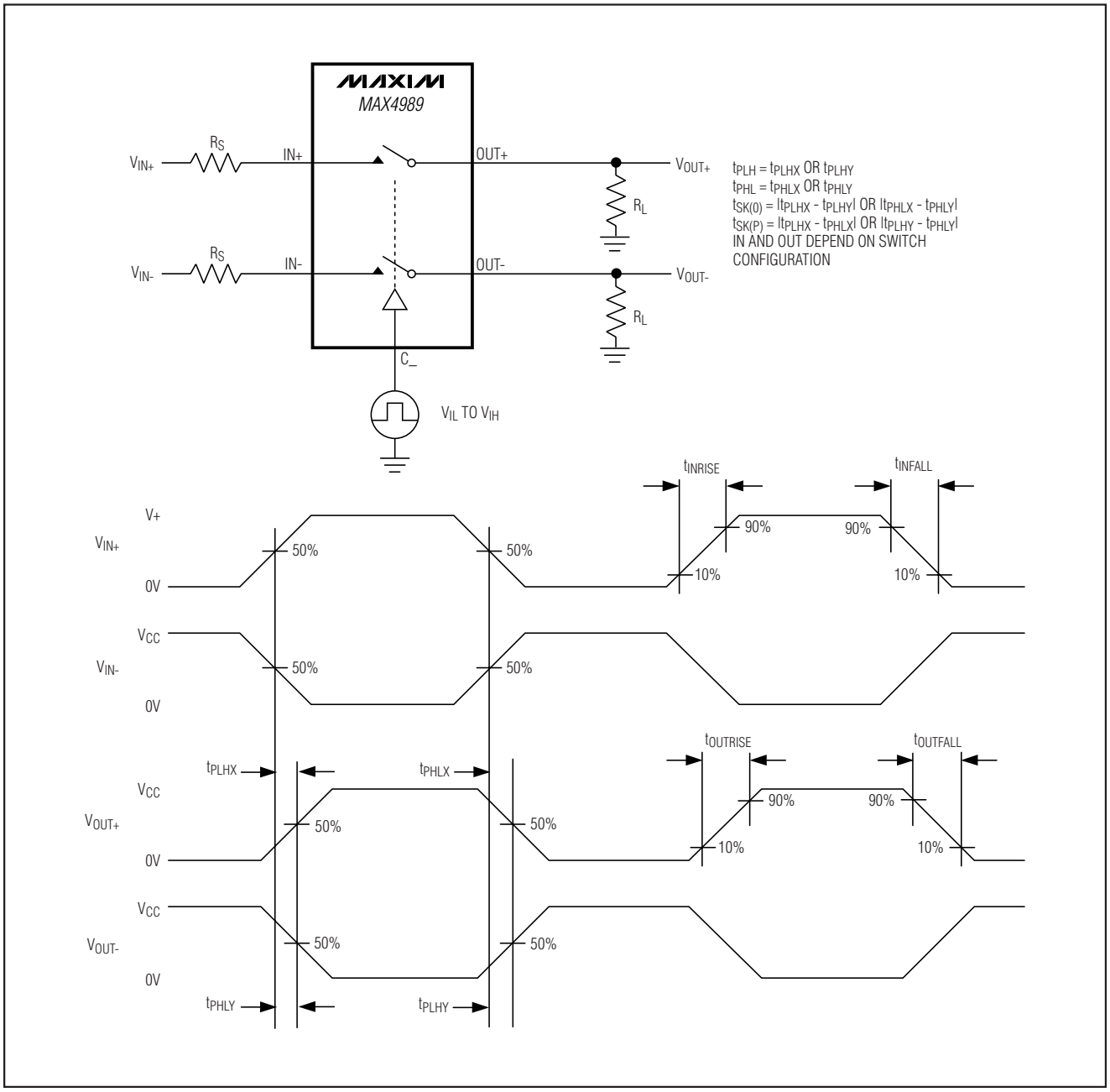

Figure 3. Output Signal Skew, Rise/Fall Time, Propagation Delay

Microchip Ex. 1063, p. 5
Microchip v. Aptiv
IPR2024-00494

USB 2.0 Hi-Speed 2-of-4 Crosspoint Switch

Typical Operating Characteristics

(V_{CC} = +3.3V, T_A = +25°C, unless otherwise noted.)

ON-RESISTANCE vs. INPUT VOLTAGE

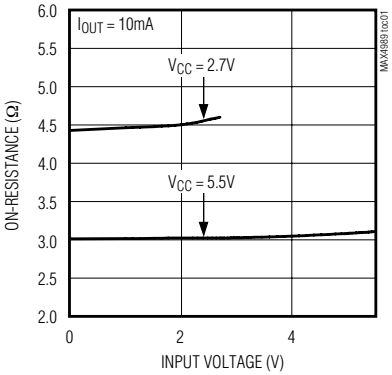

ON-RESISTANCE vs. INPUT VOLTAGE

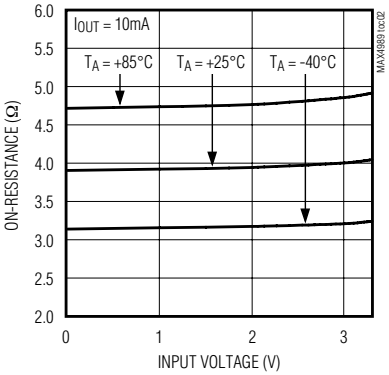

LEAKAGE CURRENT vs. TEMPERATURE

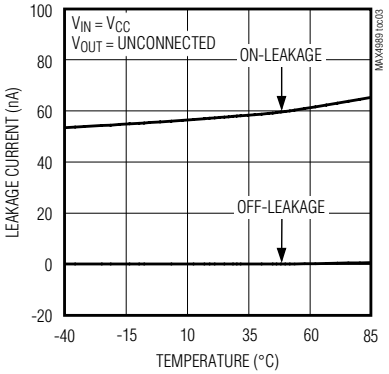

SUPPLY CURRENT vs. TEMPERATURE

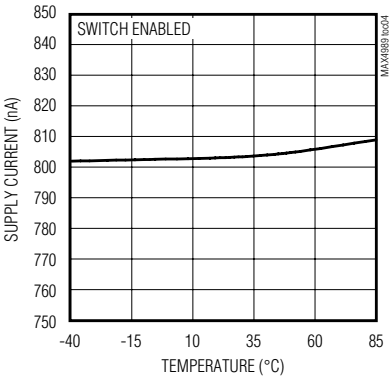

INPUT LOGIC THRESHOLD vs. SUPPLY VOLTAGE

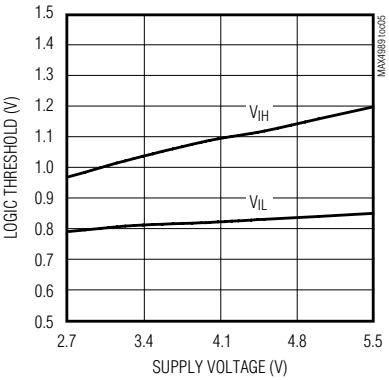

FREQUENCY RESPONSE

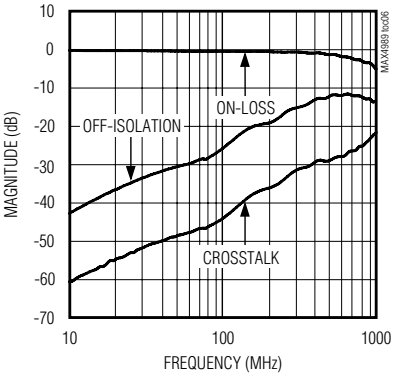

MAXIM

Microchip Ex. 1063, p. 6
Microchip v. Aptiv
IPR2024-00494

Pin Descriptions

PIN	NAME	FUNCTION
1	Y-	Inverting Input/Output of Terminal Y
2	Y+	Noninverting Input/Output of Terminal Y
3	GND	Ground
4	Z+	Noninverting Input/Output of Terminal Z
5	Z-	Inverting Input/Output of Terminal Z
6	C0	Control Input 0
7	C1	Control Input 1
8	C2	Control Input 2
9	V_{CC}	Positive Supply Voltage Input. Bypass V_{CC} to GND with a 0.1µF ceramic capacitor as close as possible to the device.
10	X-	Inverting Input/Output of Terminal X
11	X+	Noninverting Input/Output of Terminal X
12	GND	Ground
13	W+	Noninverting Input/Output of Terminal W
14	W-	Inverting Input/Output of Terminal W
—	EP	Exposed Pad. EP can be connected to GND or left unconnected. EP is not intended as an electrical connection point.

Detailed Description

The MAX4989 is a USB 2.0 bidirectional crosspoint switch that allows the user to connect any 2 of 4 USB pairs. The device operates from a single +2.7V to +5.5V supply and features an internal charge pump to permit the full rail-to-rail swing necessary for USB low-/full-/Hi-Speed applications with data rates up to 480Mbps.

Control Logic Inputs

The MAX4989 provides three control logic inputs, C0, C1, and C2, to control the switch connections as shown in the *Functional Diagram/Truth Table*. Driving the control logic inputs rail-to-rail minimizes power consumption.

Shutdown Mode

The MAX4989 features a shutdown mode that reduces the supply current to less than 0.5µA and places all switch terminals in high impedance. Drive all control inputs high or all control inputs low to place the device in shutdown mode (see *Functional Diagram/Truth Table*.)

USB Switching

The low on-resistance and low on-capacitance of the MAX4989 make it ideal for high-performance Hi-Speed USB 2.0 switching applications. The MAX4989 is ideal for routing USB data lines and for applications that require switching between multiple USB hosts or devices (Figure 4).

Layout

Hi-Speed USB requires careful PCB layout with controlled-impedance matched traces of equal lengths. Ensure that bypass capacitors are as close as possible to the device. Use large ground planes where possible.

Power-Supply Sequencing

Caution: Do not exceed the absolute maximum ratings because stresses beyond the listed ratings may cause permanent damage to the device.

Proper power-supply sequencing is recommended for all devices. Always apply V_{CC} before applying signals, especially if the signal is not current limited.

Chip Information

PROCESS: BiCMOS

Microchip Ex. 1063, p. 7
Microchip v. Aptiv
IPR2024-00494

USB 2.0 Hi-Speed 2-of-4 Crosspoint Switch

Functional Diagram/Truth Table

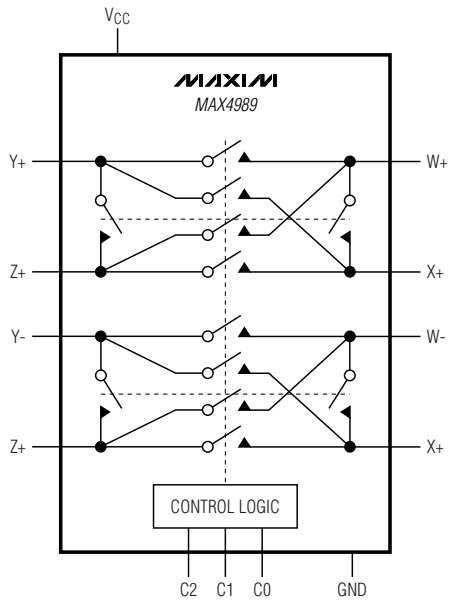

MAX4989			
C2	C1	C0	SWITCH
0	0	0	SHUTDOWN
0	0	1	W AND X CONNECTED
0	1	0	W AND Y CONNECTED
0	1	1	W AND Z CONNECTED
1	0	0	X AND Z CONNECTED
1	0	1	X AND Y CONNECTED
1	1	0	Y AND Z CONNECTED
1	1	1	SHUTDOWN

Applications Information

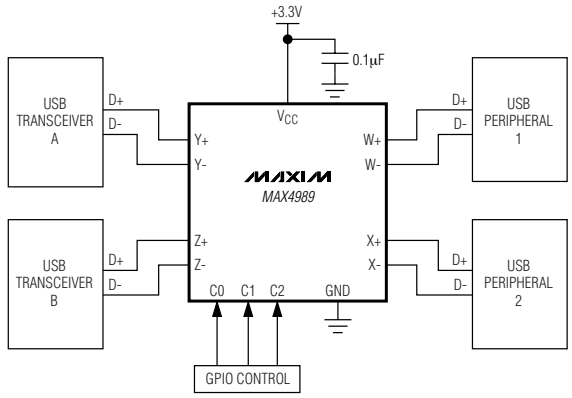

Figure 4. Typical Application Circuit

Package Information

For the latest package outline information and land patterns, go to **www.maxim-ic.com/packages**.

PACKAGE TYPE	PACKAGE CODE	DOCUMENT NO.
14 TDFN	T1433-2	21-0137

Maxim cannot assume responsibility for use of any circuitry other than circuitry entirely embodied in a Maxim product. No circuit patent licenses are implied. Maxim reserves the right to change the circuitry and specifications without notice at any time.

© 2008 Maxim Integrated Products MAXIM is a registered trademark of Maxim Integrated Products, Inc.

Microchip Ex. 1063, p. 8
Microchip v. Aptiv
IPR2024-00494