UNITED STATES PATENT AND TRADEMARK OFFICE

_____

BEFORE THE PATENT TRIAL AND APPEAL BOARD

_____

MICROCHIP TECHNOLOGY INC.
Petitioner,

v.

APTIV TECHNOLOGIES AG
Patent Owner.

Patent No. 9,460,037

_____

Inter Partes Review No. IPR2024-00494

PATENT OWNER'S PRELIMINARY RESPONSE

TABLE OF CONTENTS

I. INTRODUCTION 1

II. DISCRETIONARY DENIAL IS WARRANTED 2

III. BACKGROUND 4

- A. Traditional USB Topology 4
- B. Apple's CarPlay Requirements 5
- C. Existing Technology Fell Short 7
- D. Manufacturers Demanded Better Solutions 8
- E. Leading Chip Makers—Including Microchip—Failed to Solve the Problem 9
- F. Patent Owner Developed a Novel Solution That Provided Persistent USB 12
- G. As Patent Owner's Invention Enjoyed Commercial Success, Microchip Failed to Replicate It 14
- H. Microchip Finally Released a Competing Product in 2017 15

IV. PERSON OF ORDINARY SKILL IN THE ART ("POSITA") 15

V. OVERVIEW OF THE '037 PATENT 16

VI. OVERVIEW OF THE ASSERTED PRIOR ART 17

VII. CLAIM CONSTRUCTION 21

VIII. A POSITA WOULD NOT HAVE BEEN MOTIVATED TO COMBINE THE REFERENCES 21

- A. A POSITA Would Have No Reason to Consider Using Chang II to Modify Chang 22
  - 1. A POSITA would not have recognized Chang II as intended for use with dual-role devices 23
  - 2. A POSITA would not have referenced Chang II to implement a dual-role port 25
  - 3. A POSITA would not have been motivated to modify Chang with Chang II because adding steps to Chang's solution would only frustrate Chang's express goal 26

B. Petitioner's Justifications for Combining Chang and Chang II Ignore and Mischaracterize Chang II's Disclosures 28

1. Petitioner cannot establish obviousness over Chang and Chang II based on arguments that do not mention any teaching in Chang II 29

2. "Common-sense" cannot fill the gaps in Petitioner's motivation-to-combine arguments 30

3. Petitioner cannot establish motivation to combine based on arguments that misapply the disclosures in Chang and Chang II.....32

4. Petitioner's final argument lacks sufficient evidentiary support.....32

C. A POSITA Would Not Have Been Motivated to Add Chutorash to the Combination 33

IX. CONCLUSION.....36

TABLE OF AUTHORITIES

Page(s)

Cases

Cuozzo Speed Techs., LLC v. Lee,
579 U.S. 261 (2016).....3

Innogenetics, N.V. v. Abbott Laby's,
512 F.3d 1363 (Fed. Cir. 2008).....29

Koninklijke Philips N.V. v. Google LLC,
948 F.3d 1330 (Fed. Cir. 2020).....22

In re Nuvasive, Inc.,
842 F.3d 1376 (Fed. Cir. 2016).....30

Realtime Data, LLC v. Iancu,
912 F.3d 1368 (Fed. Cir. 2019).....21

SmithKline Diagnostics, Inc. v. Helena Lab'ys Corp.,
859 F.2d 878 (Fed. Cir. 1988).....22

TQ Delta, LLC v. CISCO Systems, Inc.,
942 F.3d 1352 (Fed. Cir. 2019).....22, 25, 30, 36

Statutes

35 U.S.C. § 314(a).....3, 4

35 U.S.C. § 323.....1

Other Authorities

37 C.F.R. § 42.15(a)(1), (3).....4

37 C.F.R. § 42.107.....1

Office Trial Practice Guide Update (November 2019).....1

Exhibit List for Inter Partes Review of U.S. Patent No. 9,460,037

Exhibit #	Exhibit Description
2001	Declaration of Henry Houh ("Houh Decl.")
2002	Trial Transcript Excerpts, *Microchip Tech. Inc. v. Aptiv Servs. US, LLC*, No. 17-cv-1194 (D. Del. Apr. 6-13, 2022) – Testimony of Mitch Obolsky
2003	Trial Transcript Excerpts, *Microchip Tech. Inc. v. Aptiv Servs. US, LLC*, No. 17-cv-1194 (D. Del. Apr. 6-13, 2022) – Testimony of Robert Voto
2004	Complaint, *Aptiv Technologies Ltd. v. Microchip Technology, Inc.*, No. 23-cv-307-JDW (D. Del.)
2005	Trial Exhibit No. 58 - Jun. 18, 2014, Mark Orlosky and Brigham Steele Email Chain re: CarPlay and forced DCP to external ports
2006	Trial Exhibit No. 62 - Oct. 1, 2014, Stefan Saenger, Chris Behal, and Ray Kamps Email Chain re: CarPlay - Fiat
2007	Trial Exhibit No. 66 - Nov. 26-Dec. 1, 2014, David Sroka, Eric Kawamoto, and Sal Canu Email Chain re: Media Hub Interim Update
2008	Trial Exhibit No. 246 - Jul. 20, 2014, Don Perkins Email re: UNG Detroit Sales Meeting and Training July 15 – 18
2009	Trial Exhibit No. 252 - Aug. 11, 2014, David Sroka, Don Perkins, Sal Canu Email Chain re: CarPlay compliance Strategy
2010	Trial Exhibit No. 262 - Sal Canu Dec. 2, 2014, Email re: Microchip Position for the Thursday Chrysler Meeting
2011-2015	*Intentionally Omitted*
2016	Robert Dezmelyk Declaration in Support of Microchip's Responsive Claim Construction Brief, *Aptiv Technologies AG v. Microchip Technology Inc.*, No. 23-cv-307-JDW (DED)
2017	Trial Transcript Excerpts, *Microchip Tech. Inc. v. Aptiv Servs. US, LLC*, No. 17-cv-1194 (D. Del. Apr. 6-13, 2022) – Testimony of Michael Dreon

Exhibit #	Exhibit Description
2018	Redacted Version of Jury Verdict Form, *Microchip Tech. Inc. v. Aptiv Servs. US, LLC*, No. 17-cv-1194 (D. Del.), D.I. 357
2019	Order re Claim Construction, dated July 12, 2024 in *Aptiv Tech. AG v. Microchip Tech., Inc.*, No. 23-cv-307 (JDW) (D. Del.), D.I. 202

Aptiv Technologies AG ("Aptiv" or "Patent Owner") submits this Patent Owner's Preliminary Response under 35 U.S.C. § 323 and 37 C.F.R. § 42.107 to Microchip Technology Inc. ("Microchip" or "Petitioner")'s Petition for *Inter Partes* Review of U.S. Patent no. 9,460,037 (the "'037 Patent").

I. INTRODUCTION

The Board should deny the Petition. Petitioner provides no reason, other than attorney argument based on hindsight, why a POSITA would be motivated to combine the references on which it relies.

With respect to Petitioner's first proposed combination, U.S. Pub 2006/0206650 ("Chang") and U.S. Pub. 2009/0268743 ("Chang II"), three of Petitioner's motivation-to-combine arguments fail to address the Chang II reference at all, rendering them legally insufficient. Petitioner's fourth argument fares no better and relies on a passing, tangential reference as its sole support. Ultimately, Chang and Chang II, authored by different named inventors, are designed to address entirely different technical problems from one another and from the '037 Patent. It was, in fact, precisely the limitations of systems like Chang and Chang II that the '037 Patent was designed to resolve.

Petitioner's second proposed combination adds U.S. Patent No. 8,447,598 to Chutorash et. al. ("Chutorash"), straining the alleged motivation to combine even further. Chutorash concerns traditional, top-down USB architectures with a single

host, not multi-host systems like the ’037 Patent. As explained below, this undermines both a POSITA’s motivation to combine the references and reasonable expectation of success should they attempt to do so. Rather, the proposed combination is the result of impermissible hindsight.

Petitioner’s own struggle to create a working solution to the problem solved by the ’037 Patent underscores precisely why such a solution was not obvious. The inventors of the ’037 Patent created their patented design in response to the pressing need for a USB hub capable of integrating into existing infotainment systems and providing support for Apple CarPlay, including Apple’s requirement that an iPhone act as the USB host. At the time of the invention, Petitioner was the market leader in vehicle USB hub chips and was highly motivated to develop a solution the CarPlay problem in response to automakers’ repeated requests. Yet even years after learning of CarPlay, and even after learning of Aptiv’s solution, Petitioner’s own engineers repeatedly acknowledged that they had no way of providing what it was that the automakers required.

II. DISCRETIONARY DENIAL IS WARRANTED

Petitioner filed the instant Petition and a second IPR petition (IPR2024-00558) challenging claims of the ’037 patent on the same day. This Petition challenges claims 1, 3, 5, and 11-17, while the -558 petition challenges claims 1-2, 4, and 6-10. Both petitions rely on the same three prior art references, Chang,

Chang II, and Chutorash. Because Petitioner has not sufficiently justified the need for two petitions against the ’037 Patent, Aptiv submits that the Board should exercise its discretion to deny institution of the instant Petition under § 314(a). *Cuozzo Speed Techs., LLC v. Lee*, 579 U.S. 261, 273 (2016) (“[T]he agency’s decision to deny a petition is a matter committed to the Patent Office’s discretion.”).

The Board has further instructed that “one petition should be sufficient to challenge the claims of a patent in most situations.” (Board’s Consolidated Trial Practice Guide (Nov. 2019) “(CTPG”), 59.) Because “multiple petitions by a petitioner are not necessary in the vast majority of cases,” a petitioner filing two or more petitions challenging the same patent should provide an “explanation of the differences between the petitions, why the issues addressed by the differences are material, and why the Board should exercise its discretion to institute” more than one petition. (CTPG, 59-60.)

Neither the Petition nor Petitioner’s Explanation for and Ranking of Two Petitions meet Petitioner’s burden to explain why it needed more than one petition to challenge the ’037 Patent. Rather than justifying the need for two petitions challenging the ’037 Patent, Petitioner’s articulated reason for filing a second petition only highlights why the Board should exercise its discretion to deny institution.

Petitioner alleges that a second petition was necessary to address the number of asserted claims given the 14,000 word limit. Seventeen claims, however, is not an inordinate number: applicable regulations specify that up to twenty claims are included in the basic filing fee for a petition. 37 C.F.R. § 42.15(a)(1), (3). Petitioner's word limit justification likewise rings hollow given that all but a dozen of the 90+ page petitions are substantially identical to one another. (*Compare* Pet. IPR2024-00558, *with* Pet.). Given the limited scope of Petitioner's invalidity challenges and the substantial similarly between the arguments in the two petitions, Petitioner has not explained why it could not have presented these arguments together in a single petition.

Because Petitioner has not established that this is one of the "rare" instances where more than one petition is needed, the Board should exercise its discretion to deny institution of this petition under § 314(a). (CTPG 59).

III. BACKGROUND

A. Traditional USB Topology

Universal Serial Bus ("USB") is a ubiquitous communication protocol that has been used in automobiles for some time. (EX-1009, 1:35-37; EX-2001, ¶ 30.) Among other things, it allows a car's infotainment system to communicate with various devices in the vehicle, such as removable consumer devices (*e.g.*,

smartphones) and/or non-removable embedded devices (*e.g.*, an SD card reader). (EX-1009, 1:50-56, 2:11-16.)

USB uses a strict top-down topology: a single upstream "host" manages and communicates with all downstream "devices." (EX-1009, 1:37-42.) A USB network can have only one host, and the host must initiate all communication within the network—hosts are not configured to listen for or respond to incoming messages. (EX-2001, ¶ 33.) Downstream devices in a USB network merely respond to requests from a host. (*Id.*)

The downstream devices connect to the host via ports—physical connection interfaces. (*Id.*, ¶ 36.) USB networks may also include USB hubs—devices that increase the number of ports to which downstream devices may connect. (*Id.*) A standard USB hub routes multiple downstream ports to a single upstream port, allowing a host to have more downstream ports while reducing the amount of wiring required. (*Id.*)

B. Apple's CarPlay Requirements

In 2013, Apple announced its plans for "CarPlay," a technology that would allow passengers to use iPhone applications via a vehicle's infotainment system. (*Id.*, ¶ 39.) As part of its announcement, Apple provided automakers with certain technical requirements to ensure that CarPlay would function properly. (*Id.*) Apple described these requirements in an Accessory Interface Specification and

mandated a certification process to ensure that only certified devices would be permitted to support CarPlay. (*Id.*)

Notably, CarPlay required that the iPhone act as the USB host at all times while CarPlay was in use. (*Id.*, ¶ 40.) This presented a quandary for automakers because most existing automobiles had USB networks designed to operate with a built-in USB host (*i.e.*, the "head unit") contained in the infotainment system. (*Id.*) In those existing systems, consumer devices such as smartphones, SD cards, etc., connected to the USB network through a hub and would appear to the head unit as USB devices. (*Id.*)

Apple's requirement that the iPhone act as a USB host complicated this design because the iPhone and the head unit could not both be hosts under USB's conventional top-down architecture. (EX-1009, 3:8-11; EX-2001, ¶ 40.) Existing infotainment system design would not allow the iPhone to act as a USB host for CarPlay while also allowing the head unit to control the other media devices in the vehicle. (EX-2001, ¶ 40.) Nor would it allow the iPhone to communicate with the head unit while the iPhone acted as a host. (*Id.*) Even more challenging, certain non-CarPlay use cases expected the iPhone to function as a USB device. (EX-1009, 2:59-65.)

C. Existing Technology Fell Short

At the time of the patented invention, there were two methods for implementing host-to-host and host-to-device communication in an automotive USB system that would permit an iPhone to act as a host within a car's USB system. Both methods were flawed.

The first solution—a "dual-lane" approach—supported host-to-host communications and host-to-device communications on separate lines. Consequently, the system required an additional communication path between the car's head unit and every host-to-host port, adding significant cost and complexity to the USB system. (EX-2001, ¶ 42.) Moreover, the dual-lane approach required consumers to attach a smartphone using different ports depending on whether the phone was operating in host or device mode. (*Id.*)

The second solution was role reversal: a method of inverting the USB system to swap the existing host and device roles. (EX-1009, 3:21-24.) For example, specialized "On-the-Go" or "OTG" ports permitted OTG-capable devices to act as a host while CarPlay was active. (EX-1009, 3:24-27; EX-2001, ¶ 43.) Similarly, solutions like Microchip's proprietary "FlexConnect" feature dynamically changed a physical port from an upstream port to a downstream port, thereby allowing a device to swap from host to device and vice versa. (EX-1009, 3:49-52; EX-2001, ¶ 43.)

But the role-reversal approach suffered from a fundamental and unacceptable flaw. Though it allowed the smartphone to act as a host, it forced the infotainment system to act as a device. (EX-1009, 3:59-63.) That meant that the infotainment system could not support other downstream devices during CarPlay, potentially interrupting features like navigation and audio playback. (EX-1009, 3:63-67.) Role reversal could not simultaneously provide both host-to-host communication and persistent downstream USB connections throughout the vehicle. (EX-2001, ¶ 44.)

Even Microchip recognized that dual lane and role reversal solutions were simply not acceptable to its customers, conceding that, "[w]hen persistent USB is a requirement we definitely have run into a wall." (EX-2007, 1.)

D. Manufacturers Demanded Better Solutions

Automakers, also known as Original Equipment Manufacturers ("OEMs"), wanted infotainment systems capable of CarPlay and persistent downstream USB communications, and they voiced this request to Microchip and other suppliers of USB hub modules. For example, Chrysler expressed that it "does not want to lose data capability on the other ports not tied to the Apple device." (EX-2005, 2.) As one of Microchip's employees noted, "[OEMs] want CarPlay AND they want additional connectivity to [*sic.*] head unit to other devices." (EX-2006, 2.)

E. Leading Chip Makers—Including Microchip—Failed to Solve the Problem

At the time of the invention, Microchip was undisputedly an expert in chip design and manufacturing, including in the automotive USB sector. As of 2022, Microchip sold about 8 billion chips per year and had at least 2,000 engineers working in its Networking and Data Center Business Unit, and many of those engineers specialized in research and development for new products. (EX-2002, 195:17-21, 199:5-9, 200:13-20, 203:22-204:3.) Between 2021 and 2022, Microchip provided 35 million USB hub chips per year to the automotive industry. (*Id.*, 211:8-14.)

In fact, prior to the invention, Microchip provided nearly 100% of all USB hub chips used in cars made by the "Big Three" automotive companies: Ford, Chrysler, and GM. (*Id.*, 211:23-212:6.) Microchip had also provided USB hub chips to Tesla, Audi, Volkswagen, BMW, Mercedes, Kia, Mazda, Toyota, Honda, and Nissan. (*Id.*, 215:1-23.)

If there were an obvious solution to manufacturers' demands, Microchip would have found it. Yet Microchip repeatedly acknowledged, both internally and to its customers, that it did not have a solution to the CarPlay problem even ***years*** after the 2013 priority date of the '037 Patent:

- On June 18, 2014, Microchip declared that the problem was not solvable:

> Some items may be ***physically outside the capabilities of ANY USB system***. . . . With USB, you are only allowed 1 Host and multiple devices on a bus. This message is critical, so we need to make sure [Chrysler] understands this fact . . . . ***We need to emphasize that you cannot do CarPlay AND own the other ports with one USB data lane*** . . . No bus can serve two masters . . .

(EX-2005, 1-2.)[1]

- During an April 2022 trial,[2] Microchip admitted that it told customers that the problem was not solvable:

> Q: So at this point in time, Microchip was telling its customers this one lane persistent USB thing isn't going

[1] All emphases added unless otherwise specified.

[2] Once Microchip eventually developed a competing product (modeled after Aptiv's), it sued Aptiv in Delaware district court, alleging that Aptiv's product infringed several of Microchip's existing USB patents. At trial, the jury disagreed, finding conclusively that Aptiv's product did not infringe any of the patents that Microchip asserted against it. (EX-2018.)

> to work and you should go with the FlexConnect solution instead?
>
> A: That's about right.

(EX-2002, 312:4-9.)

- On July 20, 2014, Microchip acknowledged that Aptiv had invented a solution to the problem that Microchip could not solve:

> ***[Aptiv's] solution offers 'Flex' on every port and connectivity throughout the car.*** Both of these features are highly desirable by the car makers. . . . There is no way to defeat the competitive threat without accomplishing this.

(EX-2008, 1 (July 20, 2014).)

- Even after Aptiv invented a solution, Microchip continued to maintain that no viable solution was possible:

> This is completely NON-STANDARD USB. . . . ***This goes against the primary requirement of USB***; one bus / one Host. . . . These hosts will be acting independently of each other but will need to maintain USB specifications/ timing/time-outs/HID / adequate throughputs as if it was a

> single bus. Could be demo'd but ***no way it can be guaranteed***.

(EX-2009, 1 (Aug. 11, 2014) (emphases added).)

- Even at the end of 2014, Microchip still had not been able to offer a system with persistent USB:

> When persistent USB is a requirement ***we definitely have run into a wall***.

(EX-2007, 1 (Dec. 1. 2014).)

F. Patent Owner Developed a Novel Solution That Provided Persistent USB

While Microchip, the market leader, considered this to be a problem with no solution, Aptiv was able to create a single-upstream solution that supported CarPlay and allowed persistent downstream USB after launching a custom development program in late 2012.[3] (EX-2003, 53:4-17, 54:16-55:1, 111:5-12.)

Aptiv's solution was creative and elegant, integrating a USB bridge into a traditional USB hub, allowing for host-to-host communication through the bridge without interrupting the traditional hub function for other downstream devices.

---

[3] At the time of the invention of the Asserted Patents, the inventors were employees of Unwired Technology, which was acquired by Aptiv (named Delphi at the time) in 2014.

(EX-1009, Claim 1, 4:20-25.) Specifically, when the consumer device is in host mode, the USB signal is routed to the hub through a USB bridge, rendering the two hosts compatible. (*Id.*, Claim 1, 4:27-33.) But when the consumer device is in device mode, the USB signal is routed directly to the hub, thereby bypassing the bridge. (*Id.*, 4:25-27.) The alternative paths are shown below in an annotated version of Figure 4.

Figure 4

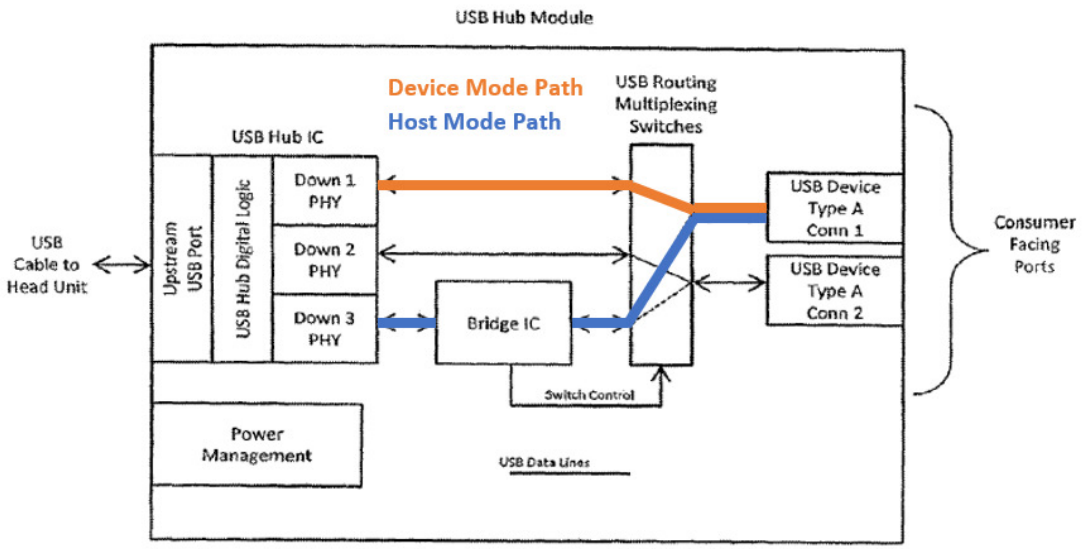

(*Id.*, Fig. 4 (annotated).)

In contrast to the dual-lane approach, the patented invention can be implemented with a single upstream line and allows a CarPlay device to be connected on any port. This design also addresses the flaws in the role-reversal approach. Because it allows the infotainment system to remain a host at all times,

even while supporting CarPlay, the design enables persistent communication with downstream devices. (*Id.*, 8:63-9:8.) And it accomplishes this without the need for OTG ports or adapters; it takes an entirely different approach to solving the problem. (*See id.*, 1:21-28.)

G. As Patent Owner's Invention Enjoyed Commercial Success, Microchip Failed to Replicate It

As a result of this innovative design, Aptiv's dual-role hub product, which embodies the invention, is able to provide the features that automakers found "highly desirable." (EX-2008, 1.) As Microchip conceded, Aptiv's solution "offers 'Flex'" (*i.e.*, host-to-host capability) "on every port and connectivity throughout the car" (*i.e.*, persistent downstream USB). (*Id.*) As a result of Aptiv's significant innovation, Aptiv unseated Microchip as the exclusive supplier of USB hub chips for the "big three" automotive companies. (EX-2002, 229:14-19, 237:22-238:8.)

If the invention were obvious over the prior art, as Microchip now contends, presumably, Microchip—an expert in the field—could have deduced how it works. This is especially true given Microchip's resources and incentives to provide a viable CarPlay solution that would satisfy the automakers' requirements. But even as Patent Owner's invention gained traction in the market, Microchip still could not replicate it. As Microchip's field application engineer explained on Dec. 2, 2014: "[w]e looked at developing a solution for 1 upstream lane, persistent USB

data and we don't have a solution. We wish we could provide a solution but we don't have it." (EX-2010, 1.) Thus, even with access to the prior art that Microchip now relies on, Microchip's team of POSITAs and its motivated business unit could not develop the claimed invention.

H. Microchip Finally Released a Competing Product in 2017

Microchip finally launched a competing product in 2017, named "Sandia," several years after the priority date and multiple years after Aptiv released its product employing the patented technology. (EX-2004, ¶ 24.)

IV. PERSON OF ORDINARY SKILL IN THE ART ("POSITA")

At the time of the invention, a POSITA would have had a bachelor's degree in computer science, electrical engineering, or an equivalent, and two years of professional experience working with computer network protocols such as USB. (EX-2001, ¶ 26.) Lack of work experience can be remedied by additional education, and vice versa. (Id.)

Petitioner's definition, heightened from its proposed definition of a POSITA in the co-pending district court litigation,[4] should be rejected.

---

[4] Petitioner's POSITA definition in these proceedings requires familiarity with a litany of specific documents and standards absent from Petitioner's POSITA definition in parallel district court litigation. (*Compare* Pet., 25-26, *with* EX-2016

V. OVERVIEW OF THE ’037 PATENT

The ’037 Patent is generally directed to a system for facilitating host-to-host and host-to-device communications through a USB hub. (EX-1001, Abstract.)

Claim 1 of the ’037 Patent recites:

1. A system disposed within a vehicle, comprising:

an embedded Universal Serial Bus (USB) Host system;

a USB Hub having a plurality of USB Ports and interconnected to the embedded USB Host system, said USB Hub configured to simultaneously broadcast data from the embedded USB Host system to each USB Port in the plurality of USB Ports and to transmit data from each USB Port to the embedded USB Host system;

a USB Bridge interconnected to the USB Hub and configured to connect the embedded USB Host system to a second USB Host; and

---

¶¶ 32-33.) Notably, Petitioner’s expert in district court—a co-author of the original USB Specification—did not require familiarity with the particular documents and standards that Petitioner now identifies, despite his broad consideration of “the type of problems encountered by practitioners, the nature of prior art solutions, and the rapidity of innovations in the area of USB technology[.]” (EX-2016 ¶¶ 32-33.)

a USB routing switch interconnected to the USB Bridge, the USB Hub, and the plurality of USB Ports, wherein the USB routing switch is configured to connect a first USB Port of the plurality of USB Ports to the USB Hub through the USB Bridge when a consumer device connected to the USB Port is the second USB Host and is configured to initiate bidirectional communication with the embedded USB Host, and wherein the USB routing switch is configured to connect the first USB Port directly to the USB Hub when the consumer device connected to the first USB Port is configured to only respond to communication from the embedded USB Host, thereby rendering the consumer device compatible with the embedded USB Host system.

Thus, Claim 1 describes a system wherein a switch connects a plurality of USB ports through a USB bridge when the connected consumer device is in USB host mode and instead only through a USB hub when the consumer device is in USB device mode, maintaining hub functionality and persistent downstream USB while supporting host-to-host communications on any port.

VI. OVERVIEW OF THE ASSERTED PRIOR ART

Petitioner relies on three prior art references. While two named inventors share the surname "Chang," they are, in fact, different individuals:

- **Chang** – U.S. Pub 2006/0206650 (EX-1014) – Chang discloses a hub for implementing host-to-host transmission through a dedicated host port connected to a bridge. (*Id.*, Abstract, [0020].) Chang's hub addresses the express goal of "easily establishing a connection between a computer and another computer." (*Id.*, [0003].) Chang's dedicated host port and bridge allow for host-to-host transmission between a first host device (such as a computer) connected to an uplink port and a second host device (such as another computer) connected to the dedicated host port. (*Id.*, [0020].) The Chang hub also comprises a number of downlink ports for linking devices connected to the downlink ports to Chang's uplink port. (*Id.*, [0019].) The downlink ports allow for host-to-device transmission between devices connected to the downlink ports and a host device connected to the uplink port. (*Id.*, [0019].)
- **Chang II** – U.S. Pub. 2009/0268743 (EX-1015) – Chang II discloses a data transmission bridge device. (*Id.*, Abstract.) The Chang II bridge device has a first connection interface and a second connection interface connected by a control chip. (*Id.*, [0023].) Chang II's control chip comprises a bypass circuit unit, a detection unit, a CPU, and a pair of USB controllers. (*Id.*, [0013].) These components are

arranged in a particular logical configuration to form two transmission paths between the pair of connection interfaces. (*Id.*, Figs. 1, 5, [0023].) The first connection interface is for connecting to a first host device, and the second connection interface is "for connecting to a second host device 3 **or** a slave device 4." (*Id.*, [0022].) Chang II teaches that the second connection interface utilizes A-Type male connector design for connection to a host device, but that an adapter can be used to instead connect a slave device to the second connection interface. (*Id.*, [0029].) The control chip detects whether a host or slave device is connected to the second connection interface and selects one of the two transmission paths to enable data transmission between the first and second connection interfaces. (*Id.*, [0023].) The first transmission path is the "bridge transmission path," which "spans first connection interface 11, first USB controller 131, buffer unit 136, second USB controller 132, and second connection interface 12." (*Id.*, [0023].) The control chip enables the bridge transmission path when a second host device connects to the second connection interface and the control chip receives a response from the second host device that is responsive to an inquire signal produced by the control chip. (*Id.*, [0026].) The second path is the "bypass path,"

which "spans first connection interface 11, first USB controller 131, bypass circuit 133, and second connection interface 12." (*Id.*, [0023].) The bridge enables the bypass path when a user connects a slave device to the second connection interface and the control chip receives an inquire signal from the slave device. (*Id.*, [0027].)

- **Chutorash** – U.S. Pat. 8,447,598 (EX-1029) – Chutorash is directed to a system for connecting a vehicle control system to a device, such as a mobile phone, via USB. Chutorash identifies two problems with vehicle user interface systems. First, it notes that the human-machine interfaces of vehicles and portable devices are "typically separate, look very different, and are difficult to use together." (EX-1029, 1:28-32.) Because "[a]pplications provided on a portable device are typically not configured to interact with a vehicle," Chutorash explains that there is a need for "improved user interface features and/or connectivity features." (EX-1029, 1:32-36.) Second, Chutorash states that "[t]here is a need for effective display reproduction and/or user interface reproduction from a remote source to an in-vehicle display or other in-vehicle interface." (EX-1029, 1:36-1:39.) The portions of Chutorash quoted in Petitioner's summary stand for the unremarkable proposition that USB was a

known method for connecting a mobile phone to a vehicle's infotainment system. (*See* Pet., 14.)

VII. CLAIM CONSTRUCTION

For purposes of this Petition, Petitioner adopts Aptiv's proposed constructions in parallel district court litigation.[5] (Pet., 29-30.) At this time, Patent Owner sees no need for the Board to further construe any claim language because the Board need only construe terms that are in controversy. *See Realtime Data, LLC v. Iancu*, 912 F.3d 1368 (Fed. Cir. 2019). Patent Owner reserves the right to address any construction proposed hereafter by the Board or as relevant to arguments made in future submissions.

VIII. A POSITA WOULD NOT HAVE BEEN MOTIVATED TO COMBINE THE REFERENCES

Petitioner's challenge relies on two grounds: (1) a combination of Chang, Chang II, and a POSITA's knowledge,[6] and (2) a combination of Chang, Chang II,

---

[5] The parties have stipulated to Aptiv's proposed construction for "embedded USB host" ("USB host physically embedded in a vehicle") and the district court has since held that claim 1 is not indefinite. *See* EX-1075; EX-2019.

[6] To the extent Petitioner contends that Chang II is not essential to Ground 1, the Petition does not articulate any single-reference obviousness ground based on Chang alone. Accordingly, the Board should decline to consider any argument

Chutorash, and a POSITA's knowledge. (Pet., 4.) As such, Petitioner bears the burden to prove motivation to combine Chang and Chang II in the manner proposed for each ground. Instead of establishing a motivation to combine Chang and Chang II, however, Petitioner relies on the general existence of dual-role devices and its expert's say-so as the foundation for its hindsight-based combination. Furthermore, Petitioner fails to demonstrate motivation to add Chutorash to the combination. This is insufficient to meet Petitioner's burden to demonstrate "motivation to combine particular references," *TQ Delta, LLC v. CISCO Systems, Inc.*, 942 F.3d 1352, 1360 (Fed. Cir. 2019), and to provide evidence "to support their use in the particular claimed combination," *SmithKline Diagnostics, Inc. v. Helena Lab'ys Corp.*, 859 F.2d 878, 886-87 (Fed. Cir. 1988). Because each and every ground Petitioner raises involves combining Chang with Chang II, these failures warrant denying institution.

A. A POSITA Would Have No Reason to Consider Using Chang II to Modify Chang

---

that the '037 Patent claim is unpatentable for obviousness based on Chang alone. *Koninklijke Philips N.V. v. Google LLC*, 948 F.3d 1330, 1337 (Fed. Cir. 2020) (concluding that the Board erred by instituting *inter partes* review based on an obviousness combination not advanced in the petition).

Perhaps because there is none, Petitioner presents no evidence that a POSITA would be motivated to "modify Chang in view of Chang II and a POSITA's knowledge to include dual-role port(s)" for use with dual-role devices. (Pet., 40.) Even assuming that a POSITA would have been motivated to modify Chang to include dual-role ports, a POSITA would not have looked to Chang II to accomplish that goal, and Petitioner presents no evidence to suggest otherwise. One need look no further than Chang II itself to confirm that a POSITA would have no reason to believe that Chang II would be compatible with Chang.

1. A POSITA would not have recognized Chang II as intended for use with dual-role devices

Nothing about Chang II suggests that it is intended for use with dual-role devices. (EX-2001, ¶ 56.) As an initial matter, Chang II does not mention dual-role devices. It instead consistently and exclusively refers to either a "host device 3" or a separate and distinct "slave device 4" as the possible downstream device connected to the second connection interface, as shown in Figure 1 below:

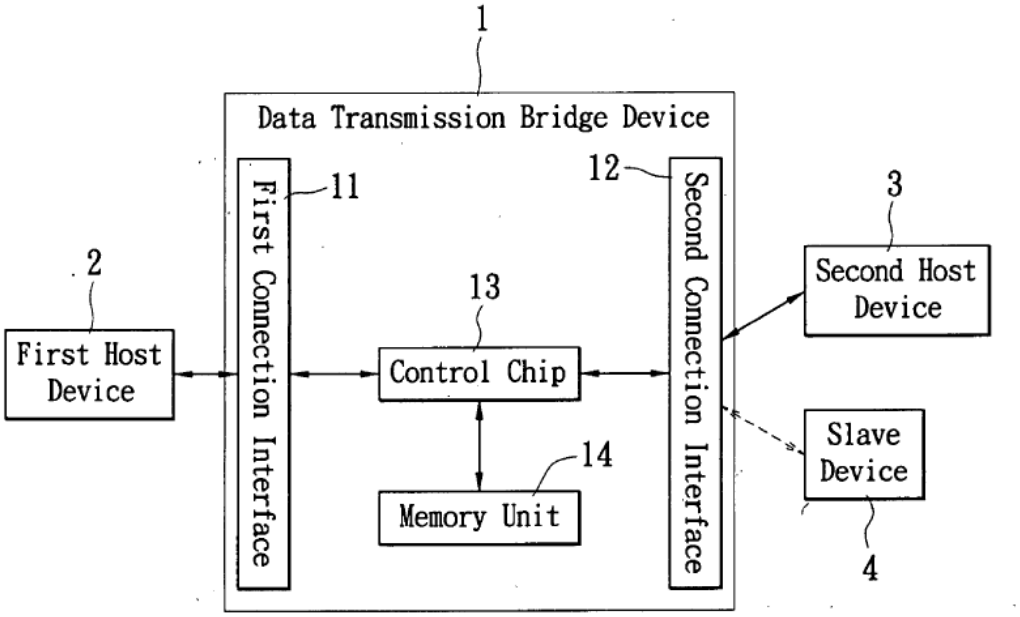

FIG. 1

(EX-1015, [0022], Fig. 1.) Chang II would therefore not have been a candidate for modifying Chang to add dual-role device connectivity. (EX-2001, ¶¶ 56-57.)

Petitioner's sole argument that Chang II contemplates dual-role devices is Chang II's disclosure that its second interface could use any of the connector types covered under the USB specification. (EX-1015, [0030].) This disclosure that a POSITA could use any specification-compliant connector type does nothing to suggest that any particular device type would be compatible with Chang II's second connection interface—let alone suggest that Chang II would be useful for dual-role devices. (EX-2001, ¶ 58.) Petitioner's *ipse dixit* assertion that a POSITA would have understood that "connecting dual-role products was within Chang II's

disclosure," (Pet., 33 n.13 (relying on EX-1013 ¶ 157)) is supported only by "[c]onclusory expert testimony [and] does not qualify as substantial evidence." *TQ Delta*, 942 F.3d at 1358-59 (collecting cases). Notably, Petitioner does not contend that this would be sufficient to demonstrate motivation to combine Chang and Chang II. (Pet., 33 n.13).

2. A POSITA would not have referenced Chang II to implement a dual-role port

The ports in the claimed invention are "dual-role" ports designed to accommodate a device regardless of whether it was operating in device or host mode. (EX-2001, ¶ 46.) Importantly, because the system was designed specifically to address the requirement that an iPhone act as a host when CarPlay is in use and as a device in other non-CarPlay use cases, these ports were designed to handle *the same device* swapping from host mode to device mode and vice-versa. (*Id.*)

Chang II does not consider a single device capable of operating in both host and device mode and instead expressly teaches that "an adapter 121 can be further attached to transform the connector type of the second connection interface 12." (EX-1015, [0029]; EX-2001, ¶¶ 56-57.) This confirms that a POSITA seeking to modify Chang to incorporate dual-role ports would not reference Chang II. (EX-2001, ¶ 59.) Indeed, rather than contemplating a dual-role port that could accommodate a device regardless of whether it was in device or host mode, Chang

II expressly discloses that the use of an adapter is necessary to swap between the USB connection used for USB hosts (A-type male) and the USB connection used for USB devices (B-type female): "if the second connection interface 12 needs to connect to a slave device 4 (which normally has a B-Type female connector of USB specification), ***then an adapter 121 can be further*** attached to transform the connector type of the second connection interface 12, so that the required B-Type male connector of USB specification can be available." (EX-1015, [0029].) Chang II's disclosure that its second interface could use any of the connector types covered under the USB specification does not obviate the need for an adapter to switch between different USB specification connector types at a given port. (*Id.*, [0030]; EX-2001, ¶ 59.) It is the adapter that permits the second connection interface to "acquire" a different USB specification connection type than the one it had "adopt[ed]." (*Id.*) Thus, Chang II does not contemplate the use of a port that would allow a single device to seamlessly swap between host and device modes, as taught in the '037 Patent. (EX-2001, ¶¶ 57-58.)

3. A POSITA would not have been motivated to modify Chang with Chang II because adding steps to Chang's solution would only frustrate Chang's express goal

Additionally, Chang already accommodated both USB hosts and USB devices through dedicated ports for host-to-host and host-to-device transmission. (EX-1014, [0019]-[0020], Fig. 3; EX-2001, ¶¶ 62-63.) The very

references that Petitioner relies on therefore establish that a POSITA would have no motivation to look to Chang II (which does not mention dual-role devices, let alone dual-role ports) when searching for a disclosure pertinent to incorporating dual-role ports into Chang's invention (which already accommodated dual-role devices). (EX-2001, ¶¶ 55-63.)

A POSITA would not have considered using Chang II to modify Chang for the additional reason that adding steps and components to Chang, as Petitioner proposes, would only have complicated Chang's design and frustrated Chang's "express goal" of "easily establishing a connection between a computer and another computer." (EX-2001, ¶ 67; EX-1014, [0003].) Indeed, Chang II presents a specific method of connecting two devices using a bridge device that is substantially more complex than Chang's generic bridge. (EX-2001, ¶¶ 67-68.) Chang II's bridge includes a control chip with a CPU, a detection unit, multiple controllers, a bypass unit, and a buffer unit, as well as a memory unit and two connection interfaces, all arranged in a particular logical configuration. (*See* EX-1015, Figs. 1, 5; EX-2001, ¶ 67.) All of this would have been superfluous to Chang's bridge, which provides simple host-to-host data transmission. (*See* EX-1014, [0020]; EX-2001, ¶ 67.)

Ignoring the fundamental differences in bridge design between Chang and Chang II, and with the benefit of hindsight, Petitioner cherry-picks only a portion

of Chang II's bridge (the detection unit) as the sole component from Chang II that Petitioner proposes should be added to Chang. (*See* Pet., 44-45 & n.15.) According to Petitioner, Chang II's detection unit, *by itself*, would motivate a POSITA to route signals using a switch. (*See id.*, 44-45.) Despite acknowledging that Chang II's bridge "includes 'control chip 13' (shown in Fig. 5) with 'detection unit' (134) and CPU (135)" (*Id.* at 45 n.15 (citing EX-1015, [0022]-[0023], [0034])), Petitioner plucks just the detection unit out of Chang II's bridge and uses it to modify Chang (*see* Pet., 44-45 & n.15). Petitioner is forced to single out Chang II's detection unit to modify Chang because using Chang II's bridge in its entirety would result in a failure of Petitioner's solution to meet each element of the challenged claim, which requires routing signals to accommodate "a USB device capable of operating in a USB Host mode *and* a USB device mode." (EX-1009, claim 1.) But Chang II lacks any disclosure suggesting that its detection unit would be extractable from the control chip of its bridge for use as a separate component. (*See, e.g.*, EX-1015, Fig. 5 & [0034]; EX-2001, ¶ 68.)

B. Petitioner's Justifications for Combining Chang and Chang II Ignore and Mischaracterize Chang II's Disclosures

Petitioner offers four alleged justifications for combining Chang and Chang II. (Pet., 40; *see also* EX-1013 ¶¶ 175-181 (Petitioner's expert declaration enumerating the four reasons).) None is persuasive or carries Petitioner's burden to provide evidence of a motivation to combine at this stage. Petitioner's first three

arguments fail to mention Chang II at all and therefore cannot provide a motivation to combine Chang II with any reference or disclosure. (Pet., 40-41.) Petitioner's fourth argument transforms Chang II's passing mention that its bridge ***sometimes*** functions similarly to a USB hub into an unfounded conclusion that "Chang II expressly states its relevance to USB hubs," such that a POSITA would use Chang II to modify Chang. (*Id.*, 44; EX-1015, [0027], [0040].) Notably, none of Petitioner's arguments address why a POSITA would have looked to Chang II's specific disclosures to modify Chang.

1. Petitioner cannot establish obviousness over Chang and Chang II based on arguments that do not mention any teaching in Chang II

Petitioner's first three motivation-to-combine arguments fail to mention Chang II's teachings at all and therefore fail as a matter of law. *Innogenetics, N.V. v. Abbott Laby's*, 512 F.3d 1363, 1373 (Fed. Cir. 2008) ("[K]nowledge of a problem and motivation to solve it are entirely different from motivation to combine particular references."). First, Petitioner asserts that a POSITA would apply Chang II's invention to USB hubs because Petitioner argues that products "with dual-role USB capabilities were gaining popularity." (Pet., 40; EX-1013 ¶ 176.) Second, relying on its expert's say-so, Petitioner asserts "common sense" would motivate a POSITA to modify Chang to include dual-role ports because: (1) "it would be impractical, and inconvenient at best, to require

consumers to understand when to switch connections between dedicated host- and device-ports when using a dual role product"; and (2) including dual-role ports would save costs. (Pet., 40-41.) Third, Petitioner argues that adding dual-role ports to Chang would "further its express goal of 'easily establishing a connection between a computer and another computer.'" (*Id.*, 41 (quoting EX-1014, [0003]).) None of these arguments even mentions Chang II, (Petition, 40-41) let alone "explain[s] why a person of ordinary skill in the art would have combined elements from specific references *in the way the claimed invention does*." *TQ Delta*, 942 F.3d at 1360 (quoting *Innogenetics*, 512 F.3d at 1328). As such, none of these arguments suffices to establish motivation to modify Chang in view of Chang II.

2. "Common-sense" cannot fill the gaps in Petitioner's motivation-to-combine arguments

Petitioner's second argument, based on "common-sense," fails for the additional reason that common-sense rationalization alone is legally insufficient to supply a motivation to combine Chang and Chang II. *See In re Nuvasive, Inc.*, 842 F.3d 1376, 1383 (Fed. Cir. 2016) ("[T]he PTAB cannot rely solely on common knowledge or common sense to support its findings" (citing *Arendi S.A.R.L. v. Apple Inc.*, 832 F.3d 1355, 1362 (Fed. Cir. 2016).))

Even if Petitioner's "common-sense" arguments were legally cognizable, they suffer from a failure of proof. For example, Petitioner's expert relies on the

purportedly common-sense cost savings of dual-role ports, but provides no evidentiary support. Nor does Petitioner's expert compare the costs associated with Chang's solution to the costs associated with Petitioner's allegedly obvious modification of Chang. That failure is fatal to Petitioner's cost-savings argument, because cost savings are relative and can only be evaluated based on a comparison of the two competing solutions. (EX-2001, ¶ 65.) Petitioner's failure is especially problematic here given that Petitioner's proposed modifications to Chang would only *add* components to Chang's existing USB hub, including components like the detection unit that Petitioner borrows from Chang II. (*See* Pet. 44-45; *see also id.*)

Regardless, Petitioner's assertion of common-sense motivation to combine is rebutted by its own actions. In short, Petitioner's theory is premised on various shortcomings of then-existing USB systems, such as their reliance on designated host-to-host ports, costly additional components, and lack of persistent downstream USB. OEMs expressed similar concerns about existing solutions, including Petitioner's own products. (EX-2005; EX-2006; EX-2007.) If it was common sense to combine Chang and Chang II to address these issues, one might wonder why Petitioner did not do so. (EX-2010, 1 ("We looked at developing a solution for 1 upstream lane, persistent USB data and we don't have a solution. We wish we could provide a solution but we don't have it.")).

3. Petitioner cannot establish motivation to combine based on arguments that misapply the disclosures in Chang and Chang II

Petitioner's third argument—that a POSITA would have been motivated to add dual-role ports to Chang to further Chang's "express goal" of "easily establishing a connection between a computer and another computer"—also suffers from a failure of proof. (*See* Pet., 41). As an initial matter, the argument makes little sense: Chang already provides a way to accomplish its "express goal," and it does so by using dedicated ports for host-to-host and host-to-device communication. (EX-1014, [0020]; EX-2001, ¶¶ 62-63.) Complicating Chang's solution by adding steps and components, as Petitioner proposes, would only have frustrated Chang's "express goal." (EX-2001, ¶ 67.) Nothing in Chang calls for Chang II's solution, and Petitioner presents no evidence suggesting otherwise. (*See* Pet., 31-32; EX-1013, ¶ 178.)

4. Petitioner's final argument lacks sufficient evidentiary support

Petitioner's fourth argument is lacking in evidentiary support. The Petition overstates Chang II's passing mentions of a USB hub as a suggestion that Chang II's bridge would be considered for improving Chang's solution, which involved a hub and a bridge. (Pet., 44.) But Chang II does not suggest that it could be used with a hub. (EX-2001, ¶¶ 70-71.) Instead, the cited paragraphs of Chang II note merely that when using its "bypass path," the "data transmission

bridge device" provides an "intermediate transmission function (similar to the commonly known USB HUB function)," *i.e.*, "host-slave operation." (EX-1015, [0027]; *see also id.*, [0040] (same).) As a POSITA would have recognized, this has nothing to do with the primary function and defining characteristic of a USB hub—allowing an upstream port to connect to multiple downstream ports. (EX-2001, ¶ 72; *see also* Pet., 7-8 (defining USB hubs in this way).) Rather, it is intended to convey that the bypass path is a passive intermediary and does not interrupt or transform the connection between the USB device and host. (EX-2001, ¶ 72.)

A POSITA need not look beyond Chang and Chang II to recognize that Chang II's disclosures could not readily be combined with Chang to solve the problem presented by CarPlay and similar functionality. Petitioner's arguments to the contrary are insufficient as a matter of law, suffer from a failure of proof, and are belied by Petitioner's own actions, and therefore fail to provide competent evidence of motivation to combine Chang and Chang II. Accordingly, the Petition fails to demonstrate that there is a reasonable likelihood that the challenged claim is unpatentable.

C. A POSITA Would Not Have Been Motivated to Add Chutorash to the Combination

Recognizing that the combination of Chang and Chang II is deficient, Petitioner proposes adding a third reference, Chutorash. Not only does this third

reference fail to remedy the missing elements of the challenged claim, it exacerbates Petitioner's failure to explain why a POSITA would have been motivated to combine the references in the first instance. Just as the Petition provides no motivation for combining Chang and Chang II (*see supra* Sec. VII(A)-VII(B)), it provides no motivation to combine these two references with Chutorash.

Petitioner claims to rely only on Chutorash only as an example of an embedded USB host within a vehicle. While Chutorash does disclose USB communications between a mobile device and a vehicle, it does so by using a standard, top-down USB architecture in which a single host controls all of the connected components of the infotainment system. (EX-2001, ¶ 75.) It does not contemplate a USB topology in which there are two hosts, each of which may send commands to the connected infotainment devices. (*Id.*)

As a POSITA would recognize, integrating two hosts into an infotainment system requires more than simply adding a hub with host-to-host connectivity. (*Id.,* ¶ 76.) The standard USB devices found in those systems cannot process conflicting commands, which could prove not only frustrating for the user, but also potentially dangerous. It is easy to envision, for example, the chaos caused by two hosts sending conflicting GPS coordinates to the navigation system.

Chutorash also fails to contemplate that the embedded host it describes is even capable of connecting to another host, much less how it would allow for communication between the two, as would be required for a system capable of coordinating commands to downstream devices. (*Id.*, ¶¶ 75-76.) A POSITA would have needed to significantly alter the infotainment system and its embedded host in order to make any dual-role system useful in the vehicle context. Chutorash contains no teaching as to how this would be accomplished, nor any reason to believe that it could be. (*Id.*, ¶ 76.) A POSITA looking to place a dual-role hub into a vehicle would therefore not have looked to the standard system taught in Chutorash as an example of an embedded host or USB network capable of supporting such a device in a way that would provide a useful improvement. (*Id.*, ¶¶ 75-76.) For these same reasons, even if a POSITA did attempt to combine Chutorash's teaching with the alleged combination of Chang and Chang II, there would not have been any reason to believe that such a combination would succeed. (*Id.*)

Petitioner's arguments amount to nothing more than hindsight. The mere contention that "Chutorash discloses using a USB hub in a vehicle control/infotainment system" does not provide a reason why a POSITA would be motivated to place a dual-role hub in that environment. (Pet., 81-82.) And neither the Petition nor Petitioner's expert provides any non-conclusory justification for

doing so other than to satisfy the challenged claim limitations. This is "impermissible *ex post* reasoning and hindsight bias" and should not be credited. *See TQ Delta*, 942 F.3d at 1361 (cautioning that such arguments "risk[] allowing the challenger to use the challenged patent as a roadmap to reconstruct the claimed invention using disparate elements from the prior art—i.e., the impermissible *ex post* reasoning and hindsight bias that *KSR* warned against.").

IX. CONCLUSION

Petitioner has failed to establish any motivation to combine the references on which it relies. Three of its arguments for why Chang and Chang II should be combined fail to address Chang II in any way and are therefore legally insufficient. Petitioner's fourth argument lacks sufficient evidentiary support, relying instead on tangential mentions of "USB hubs" in the Chang II specification. Because the basis for each challenged claim relies on the combination of Chang and Chang II, the failure to show a motivation to combine these references is fatal to the Petition.

Petitioner has also failed to explain why a POSITA would have been motivated to combine Chang and Chang II with Chutorash. Rather, its treatment of Chutorash reveals that Petitioner's arguments are the product of impermissible hindsight.

Therefore, Aptiv respectfully requests that the Board deny institution of the Petition for inter partes review of the '037 Patent.

Dated: July 19, 2024

Respectfully submitted,

By: */s/ Alex S. Yap*

Alex S. Yap
Reg. No.: 60,609
MORRISON & FOERSTER LLP
707 Wilshire Blvd., Suite 6000
Los Angeles, CA 90017
Email: AYap@mofo.com
Tel: 213-892-5200

Counsel for Patent Owner

Certification of Word Count (37 C.F.R. § 42.24)

I hereby certify that this PATENT OWNER'S PRELIMINARY RESPONSE has 7,389 words (as counted by the "Word Count" feature of the Microsoft Word™ word-processing system), exclusive of "a table of contents, a table of authorities, mandatory notices under § 42.8, a certificate of service or word count, or appendix of exhibits or claim listing."

Dated: July 19, 2024

By */s/ Alex S. Yap*
Alex S. Yap

Certificate of Service (37 C.F.R. § 42.6(e)(4))

I hereby certify that the attached PATENT OWNER'S PRELIMINARY RESPONSE was served as of the below date via email (by agreement) to the following counsel of record for the Petitioner:

Travis Jensen (Registration No. 60,087)
tjensen@orrick.com
T61PTABDocket@orrick.com
Jeremy Jason Lang (Registration No. 73,604)
jlang@orrick.com
PTABDocketJJL2@orrick.com
Orrick, Herrington & Sutcliffe LLP
1000 Marsh Road
Menlo Park, CA 94025-1015

Dated: July 19, 2024

By */s/ Alex S. Yap*
Alex S. Yap