PTO/AIA/14 (12-13)
Approved for use through 01/31/2014. OMB 0651-0032
U.S. Patent and Trademark Office; U.S. DEPARTMENT OF COMMERCE
Under the Paperwork Reduction Act of 1995, no persons are required to respond to a collection of information unless it contains a valid OMB control number.

Application Data Sheet 37 CFR 1.76	Attorney Docket Number	40651-163154
	Application Number	
Title of Invention	FLEXIBLE MOBILE DEVICE CONNECTIVITY TO AUTOMOTIVE SYSTEMS WITH USB HUBS	

The application data sheet is part of the provisional or nonprovisional application for which it is being submitted. The following form contains the bibliographic data arranged in a format specified by the United States Patent and Trademark Office as outlined in 37 CFR 1.76.
This document may be completed electronically and submitted to the Office in electronic format using the Electronic Filing System (EFS) or the document may be printed and included in a paper filed application.

Secrecy Order 37 CFR 5.2

☐ Portions or all of the application associated with this Application Data Sheet may fall under a Secrecy Order pursuant to 37 CFR 5.2 (Paper filers only. Applications that fall under Secrecy Order may not be filed electronically.)

Inventor Information:

Inventor 1 Remove

Legal Name

Prefix	Given Name	Middle Name	Family Name	Suffix
	Robert		Voto	

Residence Information (Select One) ◉ US Residency ◯ Non US Residency ◯ Active US Military Service

City	Clarkston	State/Province	MI	Country of Residence i	US

Mailing Address of Inventor:

Address 1	7054 Oakhurst Ridge		
Address 2			
City	Clarkston	State/Province	MI
Postal Code	48348	Country i	US

Inventor 2 Remove

Legal Name

Prefix	Given Name	Middle Name	Family Name	Suffix
	Shyambabu		Yeda	

Residence Information (Select One) ◉ US Residency ◯ Non US Residency ◯ Active US Military Service

City	Rochester Hills	State/Province	MI	Country of Residence i	US

Mailing Address of Inventor:

Address 1	2134 Cattail Circle		
Address 2			
City	Rochester Hills	State/Province	MI
Postal Code	48309	Country i	US

Inventor 3 Remove

Legal Name

Prefix	Given Name	Middle Name	Family Name	Suffix
	Craig		Petku	

Residence Information (Select One) ◉ US Residency ◯ Non US Residency ◯ Active US Military Service

Under the Paperwork Reduction Act of 1995, no persons are required to respond to a collection of information unless it contains a valid OMB control number.

Application Data Sheet 37 CFR 1.76	Attorney Docket Number	40651-163154
	Application Number	
Title of Invention	FLEXIBLE MOBILE DEVICE CONNECTIVITY TO AUTOMOTIVE SYSTEMS WITH USB HUBS	

City	Clarkston	**State/Province**	MI	**Country of Residence** i	US

Mailing Address of Inventor:

Address 1	5188 Iroquois Court		
Address 2			
City	Clarkston	**State/Province**	MI
Postal Code	48348	**Country** i	US

All Inventors Must Be Listed - Additional Inventor Information blocks may be generated within this form by selecting the **Add** button. Add

Correspondence Information:

Enter either Customer Number or complete the Correspondence Information section below. For further information see 37 CFR 1.33(a).

☐ **An Address is being provided for the correspondence Information of this application.**

Customer Number	00279		
Email Address	ipdocket@clarkhill.com	Add Email	Remove Email

Application Information:

Title of the Invention	FLEXIBLE MOBILE DEVICE CONNECTIVITY TO AUTOMOTIVE SYSTEMS WITH USB HUBS		
Attorney Docket Number	40651-163154	**Small Entity Status Claimed**	☒
Application Type	Nonprovisional		
Subject Matter	Utility		
Total Number of Drawing Sheets (if any)	8	**Suggested Figure for Publication (if any)**	

Filing By Reference :

Only complete this section when filing an application by reference under 35 U.S.C. 111(c) and 37 CFR 1.57(a). Do not complete this section if application papers including a specification and any drawings are being filed. Any domestic benefit or foreign priority information must be provided in the appropriate section(s) below (i.e., "Domestic Benefit/National Stage Information" and "Foreign Priority Information").

For the purposes of a filing date under 37 CFR 1.53(b), the description and any drawings of the present application are replaced by this reference to the previously filed application, subject to conditions and requirements of 37 CFR 1.57(a).

Application number of the previously filed application	Filing date (YYYY-MM-DD)	Intellectual Property Authority or Country i

Publication Information:

☐ Request Early Publication (Fee required at time of Request 37 CFR 1.219)

☐ **Request Not to Publish.** I hereby request that the attached application not be published under 35 U.S.C. 122(b) and certify that the invention disclosed in the attached application **has not and will not** be the subject of an application filed in another country, or under a multilateral international agreement, that requires publication at eighteen months after filing.

Under the Paperwork Reduction Act of 1995, no persons are required to respond to a collection of information unless it contains a valid OMB control number.

Application Data Sheet 37 CFR 1.76	Attorney Docket Number	40651-163154
	Application Number	
Title of Invention	FLEXIBLE MOBILE DEVICE CONNECTIVITY TO AUTOMOTIVE SYSTEMS WITH USB HUBS	

Representative Information:

Representative information should be provided for all practitioners having a power of attorney in the application. Providing this information in the Application Data Sheet does not constitute a power of attorney in the application (see 37 CFR 1.32).
Either enter Customer Number or complete the Representative Name section below. If both sections are completed the customer Number will be used for the Representative Information during processing.

Please Select One:	◉ Customer Number	◯ US Patent Practitioner	◯ Limited Recognition (37 CFR 11.9)
Customer Number	00279		

Domestic Benefit/National Stage Information:

This section allows for the applicant to either claim benefit under 35 U.S.C. 119(e), 120, 121, or 365(c) or indicate National Stage entry from a PCT application. Providing this information in the application data sheet constitutes the specific reference required by 35 U.S.C. 119(e) or 120, and 37 CFR 1.78.
When referring to the current application, please leave the application number blank.

Prior Application Status	Pending		Remove
Application Number	Continuity Type	Prior Application Number	Filing Date (YYYY-MM-DD)
herewith	Claims benefit of provisional	61882915	2013-09-26

Additional Domestic Benefit/National Stage Data may be generated within this form by selecting the **Add** button. Add

Foreign Priority Information:

This section allows for the applicant to claim priority to a foreign application. Providing this information in the application data sheet constitutes the claim for priority as required by 35 U.S.C. 119(b) and 37 CFR 1.55(d). When priority is claimed to a foreign application that is eligible for retrieval under the priority document exchange program (PDX) [i] the information will be used by the Office to automatically attempt retrieval pursuant to 37 CFR 1.55(h)(1) and (2). Under the PDX program, applicant bears the ultimate responsibility for ensuring that a copy of the foreign application is received by the Office from the participating foreign intellectual property office, or a certified copy of the foreign priority application is filed, within the time period specified in 37 CFR 1.55(g)(1).

Remove

Application Number	Country [i]	Filing Date (YYYY-MM-DD)	Access Code [i] (if applicable)

Additional Foreign Priority Data may be generated within this form by selecting the **Add** button. Add

Application Data Sheet 37 CFR 1.76	Attorney Docket Number	40651-163154
	Application Number	
Title of Invention	FLEXIBLE MOBILE DEVICE CONNECTIVITY TO AUTOMOTIVE SYSTEMS WITH USB HUBS	

Statement under 37 CFR 1.55 or 1.78 for AIA (First Inventor to File) Transition Applications

☐ This application (1) claims priority to or the benefit of an application filed before March 16, 2013 and (2) also contains, or contained at any time, a claim to a claimed invention that has an effective filing date on or after March 16, 2013.
NOTE: By providing this statement under 37 CFR 1.55 or 1.78, this application, with a filing date on or after March 16, 2013, will be examined under the first inventor to file provisions of the AIA.

Authorization to Permit Access:

☒ Authorization to Permit Access to the Instant Application by the Participating Offices

If checked, the undersigned hereby grants the USPTO authority to provide the European Patent Office (EPO), the Japan Patent Office (JPO), the Korean Intellectual Property Office (KIPO), the World Intellectual Property Office (WIPO), and any other intellectual property offices in which a foreign application claiming priority to the instant patent application is filed access to the instant patent application. See 37 CFR 1.14(c) and (h). This box should not be checked if the applicant does not wish the EPO, JPO, KIPO, WIPO, or other intellectual property office in which a foreign application claiming priority to the instant patent application is filed to have access to the instant patent application.

In accordance with 37 CFR 1.14(h)(3), access will be provided to a copy of the instant patent application with respect to: 1) the instant patent application-as-filed; 2) any foreign application to which the instant patent application claims priority under 35 U.S.C. 119(a)-(d) if a copy of the foreign application that satisfies the certified copy requirement of 37 CFR 1.55 has been filed in the instant patent application; and 3) any U.S. application-as-filed from which benefit is sought in the instant patent application.

In accordance with 37 CFR 1.14(c), access may be provided to information concerning the date of filing this Authorization.

Applicant Information:

Providing assignment information in this section does not substitute for compliance with any requirement of part 3 of Title 37 of CFR to have an assignment recorded by the Office.

Under the Paperwork Reduction Act of 1995, no persons are required to respond to a collection of information unless it contains a valid OMB control number.

Application Data Sheet 37 CFR 1.76	Attorney Docket Number	40651-163154
	Application Number	
Title of Invention	FLEXIBLE MOBILE DEVICE CONNECTIVITY TO AUTOMOTIVE SYSTEMS WITH USB HUBS	

Applicant 1 Remove

If the applicant is the inventor (or the remaining joint inventor or inventors under 37 CFR 1.45), this section should not be completed. The information to be provided in this section is the name and address of the legal representative who is the applicant under 37 CFR 1.43; or the name and address of the assignee, person to whom the inventor is under an obligation to assign the invention, or person who otherwise shows sufficient proprietary interest in the matter who is the applicant under 37 CFR 1.46. If the applicant is an applicant under 37 CFR 1.46 (assignee, person to whom the inventor is obligated to assign, or person who otherwise shows sufficient proprietary interest) together with one or more joint inventors, then the joint inventor or inventors who are also the applicant should be identified in this section.

Clear

○ Assignee ○ Legal Representative under 35 U.S.C. 117 ○ Joint Inventor

◉ Person to whom the inventor is obligated to assign. ○ Person who shows sufficient proprietary interest

If applicant is the legal representative, indicate the authority to file the patent application, the inventor is:

Name of the Deceased or Legally Incapacitated Inventor :

If the Applicant is an Organization check here. ☒

Organization Name	Unwired Technology LLC		
Mailing Address Information:			
Address 1	7600 Jericho Turnpike		
Address 2	Suite 100		
City	Woodbury	**State/Province**	NY
Country i	US	Postal Code	11797
Phone Number		Fax Number	
Email Address			

Additional Applicant Data may be generated within this form by selecting the Add button. Add

Assignee Information including Non-Applicant Assignee Information:

Providing assignment information in this section does not subsitute for compliance with any requirement of part 3 of Title 37 of CFR to have an assignment recorded by the Office.

Assignee 1

Complete this section if assignee information, including non-applicant assignee information, is desired to be included on the patent application publication . An assignee-applicant identified in the "Applicant Information" section will appear on the patent application publication as an applicant. For an assignee-applicant, complete this section only if identification as an assignee is also desired on the patent application publication.

Remove

If the Assignee or Non-Applicant Assignee is an Organization check here. ☐

Under the Paperwork Reduction Act of 1995, no persons are required to respond to a collection of information unless it contains a valid OMB control number.

Application Data Sheet 37 CFR 1.76	Attorney Docket Number	40651-163154
	Application Number	
Title of Invention	FLEXIBLE MOBILE DEVICE CONNECTIVITY TO AUTOMOTIVE SYSTEMS WITH USB HUBS	

Prefix	**Given Name**	Middle Name	**Family Name**	Suffix

Mailing Address Information For Assignee including Non-Applicant Assignee:

Address 1			
Address 2			
City		**State/Province**	
Country i		Postal Code	
Phone Number		Fax Number	
Email Address			

Additional Assignee or Non-Applicant Assignee Data may be generated within this form by selecting the Add button. Add

Signature:

Remove

NOTE: This form must be signed in accordance with 37 CFR 1.33. See 37 CFR 1.4 for signature requirements and certifications

Signature	/James R. Foley/			Date (YYYY-MM-DD)	2014-09-16
First Name	James	Last Name	Foley	Registration Number	39979

Additional Signature may be generated within this form by selecting the Add button. Add

This collection of information is required by 37 CFR 1.76. The information is required to obtain or retain a benefit by the public which is to file (and by the USPTO to process) an application. Confidentiality is governed by 35 U.S.C. 122 and 37 CFR 1.14. This collection is estimated to take 23 minutes to complete, including gathering, preparing, and submitting the completed application data sheet form to the USPTO. Time will vary depending upon the individual case. Any comments on the amount of time you require to complete this form and/or suggestions for reducing this burden, should be sent to the Chief Information Officer, U.S. Patent and Trademark Office, U.S. Department of Commerce, P.O. Box 1450, Alexandria, VA 22313-1450. DO NOT SEND FEES OR COMPLETED FORMS TO THIS ADDRESS. **SEND TO: Commissioner for Patents, P.O. Box 1450, Alexandria, VA 22313-1450.**

Privacy Act Statement

The Privacy Act of 1974 (P.L. 93-579) requires that you be given certain information in connection with your submission of the attached form related to a patent application or patent. Accordingly, pursuant to the requirements of the Act, please be advised that: (1) the general authority for the collection of this information is 35 U.S.C. 2(b)(2); (2) furnishing of the information solicited is voluntary; and (3) the principal purpose for which the information is used by the U.S. Patent and Trademark Office is to process and/or examine your submission related to a patent application or patent. If you do not furnish the requested information, the U.S. Patent and Trademark Office may not be able to process and/or examine your submission, which may result in termination of proceedings or abandonment of the application or expiration of the patent.

The information provided by you in this form will be subject to the following routine uses:

1. The information on this form will be treated confidentially to the extent allowed under the Freedom of Information Act (5 U.S.C. 552) and the Privacy Act (5 U.S.C. 552a). Records from this system of records may be disclosed to the Department of Justice to determine whether the Freedom of Information Act requires disclosure of these records.

2. A record from this system of records may be disclosed, as a routine use, in the course of presenting evidence to a court, magistrate, or administrative tribunal, including disclosures to opposing counsel in the course of settlement negotiations.

3. A record in this system of records may be disclosed, as a routine use, to a Member of Congress submitting a request involving an individual, to whom the record pertains, when the individual has requested assistance from the Member with respect to the subject matter of the record.

4. A record in this system of records may be disclosed, as a routine use, to a contractor of the Agency having need for the information in order to perform a contract. Recipients of information shall be required to comply with the requirements of the Privacy Act of 1974, as amended, pursuant to 5 U.S.C. 552a(m).

5. A record related to an International Application filed under the Patent Cooperation Treaty in this system of records may be disclosed, as a routine use, to the International Bureau of the World Intellectual Property Organization, pursuant to the Patent Cooperation Treaty.

6. A record in this system of records may be disclosed, as a routine use, to another federal agency for purposes of National Security review (35 U.S.C. 181) and for review pursuant to the Atomic Energy Act (42 U.S.C. 218(c)).

7. A record from this system of records may be disclosed, as a routine use, to the Administrator, General Services, or his/her designee, during an inspection of records conducted by GSA as part of that agency's responsibility to recommend improvements in records management practices and programs, under authority of 44 U.S.C. 2904 and 2906. Such disclosure shall be made in accordance with the GSA regulations governing inspection of records for this purpose, and any other relevant (i.e., GSA or Commerce) directive. Such disclosure shall not be used to make determinations about individuals.

8. A record from this system of records may be disclosed, as a routine use, to the public after either publication of the application pursuant to 35 U.S.C. 122(b) or issuance of a patent pursuant to 35 U.S.C. 151. Further, a record may be disclosed, subject to the limitations of 37 CFR 1.14, as a routine use, to the public if the record was filed in an application which became abandoned or in which the proceedings were terminated and which application is referenced by either a published application, an application open to public inspections or an issued patent.

9. A record from this system of records may be disclosed, as a routine use, to a Federal, State, or local law enforcement agency, if the USPTO becomes aware of a violation or potential violation of law or regulation.

FLEXIBLE MOBILE DEVICE CONNECTIVITY TO AUTOMOTIVE SYSTEMS WITH USB HUBS

Inventors

Robert Voto

Shyambabu Yeda

Craig Petku

Related Application (Priority Claim)

This application claims the benefit of United States Provisional Application Serial No. 61/882,915, filed on September 26, 2013, which is hereby incorporated herein by reference in its entirety.

Background

The present invention generally relates to Universal Serial Bus ("USB") connectivity between, for example, mobile consumer devices and vehicle electronic systems. More specifically, the present invention relates to a system which is configured to provide that consumer devices that act as either USB host or USB device can connect to a vehicle's embedded USB host that does not have On the Go ("OTG") capability through an embedded USB hub in the vehicle.

Historically, mobile consumer devices such as media players, smart phones, tablets and the like have relied on connections to other devices, such as laptop or desktop personal computers ("PC's") to acquire content, exchange data, and charge the device's internal battery.

For many years now, that has been accomplished through USB ports on each device. The use of USB technology is suitable for such needs since it is commonly available, familiar to the end user, cost effective and ubiquitous. USB protocols require a point-to-point connection in which one end is the USB Host or master, and the other end is a USB Device or slave. In this way, the flow of messages between the two devices is managed and controlled, whereby the USB Device responds to messages initiated by the USB Host. Historically, PC's have provided USB Host ports for connection to simpler USB Devices such as printers, memory sticks, mobile phones, etc. The USB Host has a greater burden of software and hardware requirements than a USB Device, so it has made sense to designate the PC as the USB Host in such systems.

In vehicle systems that employ USB connections, the same concepts apply. In such systems, the vehicle is typically the USB Host. The USB Host function is often embedded into a component of the vehicle infotainment system, such as into the radio or other control module. Typically, multiple USB ports are strategically designed into the vehicle in locations convenient for the driver and passengers to connect their consumer devices. Once a consumer device is connected to one of the ports, the device begins charging and the vehicle infotainment system can access content on the consumer device. This is useful to enable features such as streaming music, video and other services the device may provide.

Such a system requires that each of the USB ports be physically connected to the vehicle's USB Host in a manner suitable for USB data flow. This is accomplished through electrical cabling which is embedded in the vehicle, and which connects each of the ports to the

USB Host. Since there can be many USB ports in a vehicle, and each port requires a cable to connect the port to the USB Host, it is desirable to share cabling when possible to minimize cost and mass of the vehicle. This is accomplished through the use of USB Hubs. USB Hubs allow a single USB Host to connect to multiple USB Devices over a single cable between the USB Host and the USB Hub. As shown in Figures 1 and 2, a single USB Hub can connect one USB Host to several USB Devices. Specifically, Figure 1 illustrates a system wherein a self-powered USB Hub having a plurality of USB ports connects to a plurality of USB Devices (via a plurality of consumer-facing USB ports), while Figure 2 illustrates a system wherein a self-powered USB Hub provides not only a plurality of USB ports which are in communication with a plurality of consumer-facing USB ports, but also a Secure Digital ("SD") card reader which is connected to a consumer-facing SD card connector. Other portions of Figures 1 and 2, such as Power Management, are standard in the industry and self-explanatory upon viewing Figures 1 and 2.

Furthermore, as shown in Figure 3, multiple USB Hubs can be tiered, such that USB Hubs connect to other USB Hubs. Specifically, Figure 3 illustrates a vehicle system architecture that includes a central vehicle microcontroller (also referred to as the Head Unit or "HU"). Connected to the Head Unit are components or systems such as displays, the audio system, entertainment system and the driver controls. The Head Unit may be architected as a single module encompassing all functions or distributed such that various functions are managed by individual modules. The Head Unit includes a Root USB Hub which is typically connected to one or more downstream USB Hubs distributed throughout the vehicle. Each USB Hub has a plurality of downstream ports (at least one of which may be an SD reader or USB audio device),

thereby effectively providing that each USB port in the vehicle has a connection to the USB Host or Head Unit. In Figure 3, for example, the Root Hub is embedded in the radio, and is connected to four (4) self-powered USB Hubs, wherein one is in the vehicle's center console, one is in the vehicle's center stack, and two are in the vehicle's rear seats.

Recently, mobile devices such as smart phones have gained in popularity. This is, in part, due to their usefulness as standalone computing devices. With advances in consumer electronic technology and increases in the speed of mobile networks, these devices are no longer reliant on being connected to PCs to access content. These smart mobile devices now have many of the same hardware resources, connectivity and software operating systems that only PCs had in past years. As has been the case with desktop PCs, accessories for these mobile devices have become available to aid in their ease of use. These accessories have included devices such as keyboards, mice, displays, touchscreen, audio systems, and other interface devices. These accessories commonly connect via a USB connection. By way of established convention in the consumer electronics market, these accessories are typically low cost and limited in USB capability to act only as a USB Device. To connect them to a smart phone, the smart phone must be the USB Host. Therefore, leading mobile device manufacturers and system designers have begun designing their mobile device products (ie smart phones, tablets,etc) to support both USB Host and USB Device roles. In other words, the phone may configure itself such that it can function as a USB Device when it needs to be, or as a USB Host when it needs to be. Recently, the system level design thinking has shifted towards viewing smart phones as the USB Host, and any device connecting thereto as the USB Device. Again, this is not surprising since this is

Microchip Ex. 1002, p. 11
Microchip v. Aptiv
IPR2024-00495

exactly how laptops and PCs work today. Extending this trend into the future, it can be predicted that the smart phone will act primarily as the USB Host, and will rarely or never act as a USB device. This presents some problems for automotive systems.

As explained previously, automotive systems have a USB Host and require USB Devices to connect to it. If a phone acts as a USB Host, then the system will not function since by USB convention, two USB Hosts cannot directly connect with each other. Automotive manufacturers desire compatibility with smart phones and are therefore motivated to adapt to this changing technology. A redesign of the USB architecture in the vehicle is thus necessary such that the vehicle can act either as the USB Host (when necessary to connect to USB Devices such as memory sticks, thumb drives, etc.) or USB Device (when necessary to connect to USB Hosts, such as a smart phone which demands to be USB Host rather than USB Device.

The USB organization has added a standard that addresses the need for devices to act as either USB Host or USB Device and as such can be considered a "dual role" USB controller. It is referred to in USB nomenclature as "On The Go" or "OTG" for short. Any device that meets the OTG standard can act as either USB Host or USB Device and can change roles dynamically. Therefore, one possible approach to modifying the vehicle USB architecture to support all use cases is to upgrade the vehicle's USB Host to USB OTG. This solution addresses the issue but has some disadvantages. First, USB Hubs do not support OTG and can no longer be used in the system. Each consumer accessible USB port that supports OTG must have a dedicated wire link to a dedicated OTG controller in the Head Unit thus negating the wiring savings associated with

use of USB Hubs. As a result several costly cables may need to be added to the vehicle's electrical system. Second, there may not be enough OTG controllers available in the Head Unit to connect to each of the vehicle's user accessible USB ports. This then forces the vehicle designer to choose a limited number of the many USB ports in the vehicle to support the OTG function and run dedicated USB cables to them. This can lead to user confusion and dissatisfaction since only certain consumer ports support the required functionality. Also, ports that support OTG may be co-located with other physically identical ports that do not. If the user chooses the wrong one, the applications they desire to run from the consumer device that requires USB Host mode won't work.

Another possible solution is to implement custom USB hubs wherein the USB Hub is able to dynamically swap its upstream port with one it's downstream ports when commanded to do so. System solutions built with this concept still require OTG controllers in the head unit but benefit from the fact that no additional wires need to be installed in the car. The existing USB cable between the USB OTG Host and the USB Hub can facilitate the necessary USB communications between the USB OTG controller in the Head Unit (HU) and a cosumer device in USB Host (such as a smart phone). This solution also has some disadvantages however. For example, when the USB Hub is commanded to swap it's upstream port with a downstream port, all other downstream ports of the USB Hubs lose their data connection with the Head Unit. While in this mode the Head Unit access to the other downstream ports of the hub cease. This may prevent use of certain vehicle system functions such as navigation or audio playback that may need consistent access to the other downstream ports of the hub to function. Furthermore, it

Microchip Ex. 1002, p. 13
Microchip v. Aptiv
IPR2024-00495

requires the HU to have an available USB OTG port and a signaling path to control the hub upstream/downstream port configuration.

Summary

An object of an embodiment of the present invention is to provide a system which is configured to enable a vehicle's embedded USB Host system to connect to mobile devices through a USB Hub, regardless of whether the mobile devices are configured to act as USB Hosts or USB Devices, without the need to provide OTG or dual role controllers in the headunit and without the need to provide additional cabling in the vehicle. Preferably, no hardware changes are required to be made to the USB Host circuits in the HU.

An embodiment of the present invention provides a system which can be employed between a vehicle's embedded USB Host and at least one, but preferably multiple, consumer facing USB ports provided in the vehicle for connection to consumer devices. The system is configured to recognize and control whether the consumer device is required to be connected to each USB port as a USB Host or as a USB Device. Further, the system is able to dynamically switch the device connection between USB Device mode and USB Host mode when desired. In the case where the consumer device is acting as a USB Device, signals are routed normally through a USB Hub to the Head Unit. In the case where the consumer device is acting as a USB Host, signals between the consumer device and the vehicle's embedded USB Host are routed and processed through a USB Host to Host Bridge which is connected to the USB Hub, thereby rendering the consumer device compatible with the vehicle's embedded USB Host.

Microchip Ex. 1002, p. 14
Microchip v. Aptiv
IPR2024-00495

The present invention is capable of being implemented in several different embodiments. For example, an embodiment of the present invention comprises a USB Hub Module having a USB Hub, USB Bridge, and USB routing switches implemented as discrete devices. The USB Hub upstream port is configured to be connected to a vehicle's embedded USB Host (such as a USB Host in a Head Unit). The USB Hub Module also includes a switching device (such as USB analog multiplexing switches for example) that is configured to route each consumer port to either the Bridge or the Hub. The USB Bridge is configured to effectively control the switching device. The USB Bridge is configured, based on signals from the Head Unit, whether the consumer device which is connected to the USB port is acting as USB Host or USB Device. In the case where the consumer device is acting as USB Host, the USB Bridge controls the switching device to route the USB port to the Bridge. The Bridge processes the signals from the consumer device and provides them to the USB Hub, thereby rendering the consumer device compatible with the vehicle's embedded USB Host. In the case where the consumer device is acting as USB Device, the USB Bridge controls the switching device such that the switching device provides the signals to the USB Hub, effectively bypassing the Bridge.

Still another embodiment of the present invention provides that the USB routing logic, USB Bridge, and USB Hub are integrated in a single combination USB Hub/USB Bridge Integrated Circuit (IC).

Microchip Ex. 1002, p. 15
Microchip v. Aptiv
IPR2024-00495

Still other embodiments are entirely possible, some of which are described and illustrated herein. For example, the concept can be extended to include additional embedded USB Device functions such as USB HID and USB Audio. Further it is also envisioned that all consumer facing USB ports of the Hub Module can emulate or otherwise support dual role USB capability provided that each downstream port has a Bridge to support USB Host mode for the connected device and a direct connection to the USB Hub to support USB Device mode. In all cases, compliance to USB protocols and architectures is preferably maintained.

Microchip Ex. 1002, p. 16
Microchip v. Aptiv
IPR2024-00495

Brief Description of the Drawings

The organization and manner of the structure and operation of the invention, together with further objects and advantages thereof, may best be understood by reference to the following description taken in connection with the accompanying drawings wherein like reference numerals identify like elements in which:

Figure 1 illustrates a system wherein a multiple port self-powered USB Hub functions to connect a single USB Host to a plurality of USB ports;

Figure 2 illustrates a system wherein a self-powered USB Hub provides not only a plurality of USB ports, but also a Secure Digital ("SD") card reader;

Figure 3 illustrates a vehicle infotainment system structure wherein multiple USB Hubs are connected together or tiered, such that USB Hubs feed other USB Hubs;

Figure 4 illustrates a system which is in accordance with an embodiment of the present invention, wherein a USB Hub, USB Bridge and a switching device are provided as discrete components;

Figure 5 illustrates a system which is in accordance with an alternative embodiment of the present invention, wherein USB routing/switchinglogic and a USB Bridge are integrated with a USB Hub in a combination USB Hub/USB Bridge Integrated Circuit (IC);

Figure 6 illustrates the different components of the combination USB Hub/Bridge IC shown in Figure 5;

Figure 7 illustrates one possible endpoint configuration of the USB Bridge shown in Figures 5 and 6; and

Microchip Ex. 1002, p. 17
Microchip v. Aptiv
IPR2024-00495

Figure 8 illustrates an example implementation of a Head Unit Software Architecture.

Microchip Ex. 1002, p. 18
Microchip v. Aptiv
IPR2024-00495

Description of Illustrated Embodiments

While this invention may be susceptible to embodiment in different forms, there are specific embodiments shown in the drawings and will be described herein in detail, with the understanding that the present disclosure is to be considered an exemplification of the principles of the invention, and is not intended to limit the invention to that as illustrated.

Figure 4 illustrates a system which is in accordance with an embodiment of the present invention. The system is configured to effectively render a vehicle's embedded USB Host compatible with consumer devices which are configured to also act as USB Host or USB Device. The system is in the form of a self-powered USB Hub Module having a USB, a USB Bridge, and a switching device implemented as discrete devices. The USB Hub is preferably provided in the form of an integrated circuit (IC), and is configured (via an upsteam USB port) connected to a vehicle's embedded USB Host (such as a USB Host in a Head Unit) via vehicle internal wiring, such as, in one embodiment, via a single USB data cable between the Head Unit and USB Hub. The USB Hub also includes a plurality of downstream USB ports, at least one of which is connected to a USB Bridge (which also is preferably provided in the form of an integrated circuit (IC)). At least one downstream USB port of the USB Hub is connected to a switching device (such as USB analog multiplexing switches, for example). The switching device is configured to be connected to at least one USB port in the vehicle for connection to a consumer device. The USB Bridge is configured to effectively control the switching device although other control mechanisms are envisioned. The USB Hub Module is configured such that signals received from at least one USB port are received by the switching device, and the switching device routes

Microchip Ex. 1002, p. 19
Microchip v. Aptiv
IPR2024-00495

the signals to the USB Bridge or the USB Hub. In the case where the consumer device is acting as USB Host, the USB Bridge processes the USB packets from the consumer port and provides them to the USB Hub, thereby rendering the consumer device compatible with the vehicle's embedded USB Host. In the case where the consumer device is acting as USB Device, the USB Bridge controls the switching device such that the switching device provides the USB signaling directly to the USB Hub, bypassing the Bridge.

As shown in Figure 4, the system also includes Power Management structure, as well as some other conventional structure not specifically shown in Figure 4, but which would be readily assumed to be present by one having ordinary skill in the art.

In use, the Head Unit controls the switching device via the USB Bridge hardware or any other convenient means of control. The HU software application may choose to enable, for example, a phone on any one of the consumer USB ports, by requesting, commanding or otherwise knowing the phone is required to be in USB Host mode and commanding the routing of the specific USB port the phone is attached to the USB Bridge. Once routed to the USB Bridge, the phone will detect a USB Device is connected and the phone will begin the standard USB enumeration sequence. The detection and enumeration processes are defined by USB standards and not explained here in detail. However, for purposes of describing the operation of the invention, a general understanding is provided herein. The enumeration process follows a strict sequence of USB descriptor requests from the USB Host and USB descriptor responses from the USB Device that allow the Host to determine the capabilities and functions of the Device and configure the USB Device for operation. Once the complete set of device descriptors

are known the USB Host will then load the appropriate USB driver(s) and applications to support in the functionality that the USB Device provides. In the scope of this invention it is envisioned that the responses to the descriptor requests made by the phone (USB Host) are either answered locally by the Bridge or preferably, the requests are forwarded through the Bridge to the Head Unit where its device drivers process the request and return the response. The descriptor responses from the device driver are conveyed to the USB Bridge, which then, in turn, passes them to the phone. By passing descriptor request to the HeadUnit drivers and returning the responses from the Head Unit drivers back to the consumer device, the Bridge appears as a transparent component in the USB system architecture. The system capabilities are controlled by the Head Unit and the system remains flexible without need for changes to the Bridge firmware or hardware when the system designer requires changes to the descriptor responses. Once the consumer device completes the enumeration process, the Head Unit's USB functional capabilities are known to the consumer device and the consumer device may enable use of those functions over USB communication. At this point, the consumer device or the Head Unit may begin activating any number of supported services such as data connections, streaming audio and streaming video to and from the vehicle via the USB Bridge.

Another embodiment of the present invention can be provided, wherein the bridge is configured to act as an OTG port thus negating the need for switches and/or routing logic. In this case there would exist one Bridge functional block for each downstream port. This embodiment would effectively be a more generalized case of the example illustrated in Figure 4. Figure 4 shows just one Bridge that any one of the consumer USB ports can be routed to. With

Microchip Ex. 1002, p. 21
Microchip v. Aptiv
IPR2024-00495

just one bridge, only one consumer USB port can be connected to a USB host at a time. However, if each downstream port of the Hub has a dedicated Bridge, then multiple consumer ports can support connection to USB Host devices at the same time. Thus, any consumer port can be in either USB Host or USB Device mode at any time independently of the others.

Figure 5 illustrates an alternative embodiment wherein the switching device comprises USB routing logic, and both the USB routing logic and the USB Bridge are integrated with the USB Hub in a combination USB Hub/USB Bridge Integrated Circuit (IC). This configuration has cost and size advantages over building it with discrete components connected together on a printed circuit board.

Figure 6 illustrates the internal components of the USB Hub/USB Bridge Integrated Circuit (IC) shown in Figure 5. As shown, preferably the components of the USB Bridge include a bridge controller as well as endpoint buffers. While the exact configuration of endpoints is effectively up to the system designer to choose for a particular need, a specific example of one possible endpoint configuration is shown in Figure 7; however, many others are possible.

As shown in Figure 7, the endpoints of the Bridge may be designed to support multiple pipes of Bulk USB data connections between the Host A (Head Unit) and Host B (consumer device). In the Bridge, the IN endpoints of Device A are connected to the OUT endpoints of Device B and the OUT endpoints of Device A are connected to the IN endpoints of Device B. The design of the Bridge may be such that the data flow between the endpoints may be direct or buffered. For example, in the case of direct connection, once a USB packet is received from

Microchip Ex. 1002, p. 22
Microchip v. Aptiv
IPR2024-00495

Host A on a Device A OUT endpoint, the internal logic of the Bridge moves to packet to the Device B IN endpoint if it is available. If Device B IN endpoint is full or otherwise not available then subsequent attempts of Host A to send more packets to Device A in the Bridge will be rejected until such time that the Device B IN endpoint is clear and the contents of the Device A OUT buffer is moved to it. Alternatively, there may exist a local buffer in the Bridge between the endpoints of Device A and B. For example, packets received on an OUT endpoint of Device A are placed in a local memory device for temporary storage until Device B IN endpoint is ready for them. The OUT endpoints are thus capable of receiving multiple packets from the Host until the buffer is full. Likewise the IN endpoints may, at times, transmit multiple packets until the buffer is empty. Such buffers are not required, but are envisioned, to improve system thruput performance in certain circumstances where one of the USB Hosts is occasionally busy and not keeping up with USB transactions at the same rate as the other USB Host. Regardless of the buffer configuration, the Bridge hardware has IN and OUT endpoints on Device A mapped to OUT and IN endpoints respectively on Device B, thus forming a bidirectional bridge that passes USB traffic between two USB Hosts with bandwidth sufficient to support the application requirements of the system.

Also shown in Figure 7, Device A and Device B provide a bidirectional Control endpoint connected to their respective USB Hosts. Control endpoints are required per USB standard to support USB defined control messages between the Host and Device both during and after the enumeration sequence. Optionally, USB endpoints may also be utilized per USB standard to employ messages intended to control user defined custom device specific behavior, referred to as

Microchip Ex. 1002, p. 23
Microchip v. Aptiv
IPR2024-00495

Vendor Specific messages. As can be seen in Figure 7, the Control endpoints are mapped to the Bridge Controller (BC). The BC logic may be implemented in hardware or preferably software. The BC provides the capability to send, receive and process USB standard Control endpoint messages as well as vendor specific messages essential to the control and operation of the Bridge. At system startup, the A Host requests and receives descriptors from the BC via the Control endpoint. Once complete, Host A then loads the Bridge Driver in its software stack and configures the custom Bridge hardware for operation. Host A can then control the functions of the Bridge, such as USB switch routing control. The system is now ready to accept connection with USB Host mode consumer devices on the B Device of the Bridge. When such a connection is made, the BC will notify the Bridge Driver in Host A by sending a message on the control endpoint to Host A. Further, Host B will begin sending descriptor requests on the control endpoint to Device B in Bridge. The BC receives theses requests, encapsulates them with information that identifies them as descriptor requests from Host B and passes them to the Bridge Driver on Host using the control endpoint. Host A Bridge Driver receives these requests, identifies them as descriptor requests and passes the requests on to other software components in Host A system and waits for the descriptor responses. The descriptor responses are encapsulated by the Bridge driver to indicate they are descriptor responses that are to be forwarded to Host B. The response is then sent to the BC via the control endpoint. The BC receives them, identifies them as descriptor responses that should be forwarded to Device B and places them on the control endpoint for Device B. This process of receiving and forwarding messages back and forth between the two hosts continues until the enumeration process is complete with Host B.

From that point on the two hosts may begin to use the IN and OUT endpoints to transfer application data and services over the bulk endpoints.

Figure 8 illustrates one possible configuration of the system architecture including software components in the Head Unit interfacing with the Bridge/Hub. There are multiple ways that the operating system and software architecture can be constructed to support the functions of the USB Bridge/Hub. In Figure 8, a typical Linux implementation is shown including the Bridge/Hub Module and the Head Unit. The system design utilizes standard Linux Kernel components and configurations and should be familiar to those skilled in the art. The Head Unit USB Host Controller hardware is driven by the Host Controller Driver. The Host Controller Driver is connected to the USB Core. The USB Core connects the HCD with the standard USB Linux Device Drivers and the custom Bridge Driver. The Bridge Driver is configured to optionally connect directly to the User Space Application software or to the USB Gadget Driver depending on system architecture. The custom Bridge Driver plays a dual role of both controlling the functions of the Bridge hardware as well as providing a data path between the gadget device drivers and applications running on the Head Unit. The architecture illustrated is capable of handling both the operation and data paths associated with the Bridge and the Hub at the same time, thus allowing concurrent operation of consumer devices operating in USB Device mode with consumer devices operating in USB Host mode. In one embodiment, the Hub/Bridge supports simultaneous active USB data connections between the Head Unit and multiple consumer devices, at least one of which being in host mode while the others are in device mode. In another embodiment, the Hub/Bridge supports simultaneous active USB data connections

Microchip Ex. 1002, p. 25
Microchip v. Aptiv
IPR2024-00495

between the Head Unit and some combination of embedded and consumer USB devices along with at least one device being in host mode. While it is understood that the software functions of the head unit are essential to building a complete system, the designs of which can vary significantly and this example is provided only as a means of demonstrating one way to utilize the functionality of the present invention.

Microchip Ex. 1002, p. 26
Microchip v. Aptiv
IPR2024-00495

What is claimed is:

1. A system which is configured to enable a vehicle's embedded USB Host system to connect to consumer devices through a USB Hub, regardless of whether the consumer devices are configured to act as USB Hosts or USB Devices.

2. A system as recited in claim 1, wherein the system is configured to be employed between the vehicle's embedded USB Host system and at least one USB port provided in the vehicle for connection to consumer devices.

3. A system as recited in claim 1, wherein the system is configured to recognize and control whether the consumer device is required to be connected to each USB port as a USB Host or as a USB Device.

4. A system as recited in claim 1, wherein the system is configured to dynamically switch the device connection between USB Device mode and USB Host mode.

5. A system as recited in claim 1, wherein the system is configured to route signals through the USB Hub to a Head Unit in a case where the consumer device is acting as a USB Device.

6. A system as recited in claim 1, wherein the system is configured to route and process signals through a USB Bridge, which is connected to the USB Hub, in the case where the

Microchip Ex. 1002, p. 27
Microchip v. Aptiv
IPR2024-00495

consumer device is acting as a USB Host, thereby rendering the consumer device compatible with the vehicle's embedded USB Host system.

7. A system as recited in claim 1, wherein the system comprises a USB Hub Module comprising the USB Hub, a USB Bridge, and at least one USB routing switch.

8. A system as recited in claim 7, wherein the USB Hub is configured to be connected to the embedded USB Host system of the vehicle.

9. A system as recited in claim 7, wherein the at least one USB routing switch is configured to route each consumer port to either the USB Bridge or USB Hub.

10. A system as recited in claim 9, wherein the at least one USB routing switch comprises a plurality of USB analog multiplexing switches.

11. A system as recited in claim 7, wherein the USB Bridge is configured to control the at least one USB routing switch.

12. A system as recited in claim 11, wherein the USB Bridge is configured to control the at least one USB routing switch to route signals from the USB port to the USB Bridge in the case where the consumer device is acting as USB Host.

13. A system as recited in claim 12, wherein the USB Bridge is configured to process the signals from the consumer device and provide the signals to the USB Hub, thereby rendering the consumer device compatible with the embedded USB Host system of the vehicle.

14. A system as recited in claim 11, wherein the USB Bridge is configured to control the at least one USB routing switch to route signals from the USB port to the USB Bridge in the case where the consumer device is acting as USB Host.

15. A system as recited in claim 11, wherein the USB Bridge is configured to control the at least one USB routing switch to provide signals to the USB Hub, bypassing the USB Bridge in the case where the consumer device is acting as USB Device.

16. A system as recited in claim 1, wherein the system comprises a USB Hub Module comprising the USB Hub and a USB Bridge which is configured to function as an OTG port.

17. A system as recited in claim 7, wherein the at least one USB routing switch comprises USB routing logic, and both the USB routing logic and the USB Bridge are integrated with the USB Hub in a combination USB Hub/USB Bridge Integrated Circuit (IC).

18. A system as recited in claim 7, wherein the USB Bridge comprises a bridge controller as well as endpoint buffers.

19. A system as recited in claim 18, wherein the endpoint buffers are configured to support one or more pipes of Bulk USB data connections between a Head Unit and the consumer devices.

20. A system as recited in claim 1, wherein the system comprises a Head Unit which is electrically connected to the USB Hub via a single USB data cable.

21. A system as recited in claim 1, wherein the system comprises a Head Unit, wherein the system is configured to support simultaneous active USB data connections between the Head Unit and multiple consumer devices, at least one of which being in host mode while the others are in device mode.

22. A system as recited in claim 1, wherein the system comprises a Head Unit, wherein the system is configured to support simultaneous active USB data connections between the Head Unit and some combination of embedded and consumer USB devices along with at least one device being in host mode.

Abstract

A system which is configured to enable a vehicle's embedded USB Host system to connect to multiple mobile devices through a USB Hub, regardless of whether the mobile devices are configured to act as USB Hosts or USB Devices, without the need to add or provide OTG controllers in the system or additional vehicle wiring, or inhibiting the functionality of any consumer devices operating in USB Device mode connected to a vehicle system Hub while another consumer device connected to the same Hub operates in USB Host mode. Preferably, the system is configured to provide that no additional cabling is required, and no hardware changes are required to be made to the HU. The system can be employed between a vehicle's embedded USB Host, USB Hub and at least one consumer accessible USB port. In the case where the consumer device is acting as a USB Host, signals between the consumer device and the vehicle's embedded USB Host are processed through a bridge, thereby rendering the consumer device compatible with the vehicle's embedded USB Host.

Microchip Ex. 1002, p. 31
Microchip v. Aptiv
IPR2024-00495

Figure 1

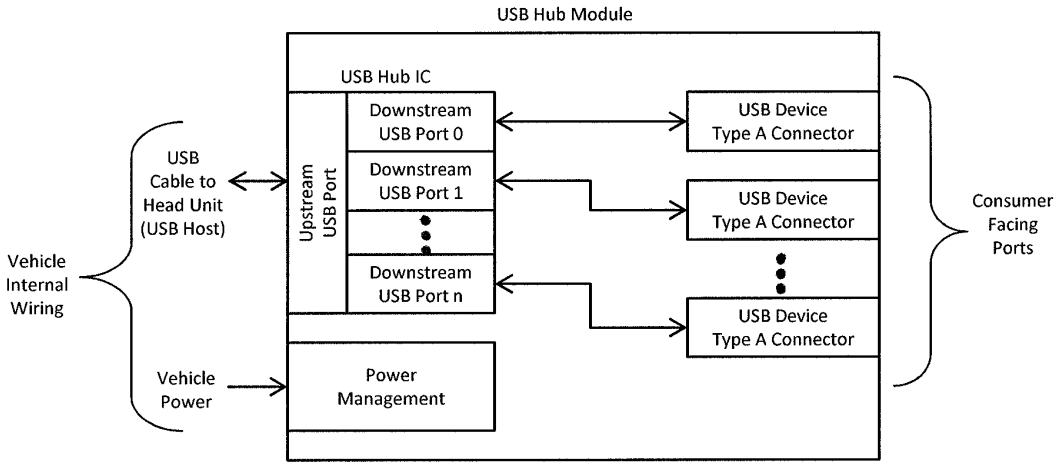
USB Hub Module
USB Hub IC
Upstream USB Port
Downstream USB Port 0
Downstream USB Port 1
Downstream USB Port n
USB Device Type A Connector
USB Device Type A Connector
USB Device Type A Connector
Consumer Facing Ports
USB Cable to Head Unit (USB Host)
Vehicle Internal Wiring
Vehicle Power
Power Management

Figure 2

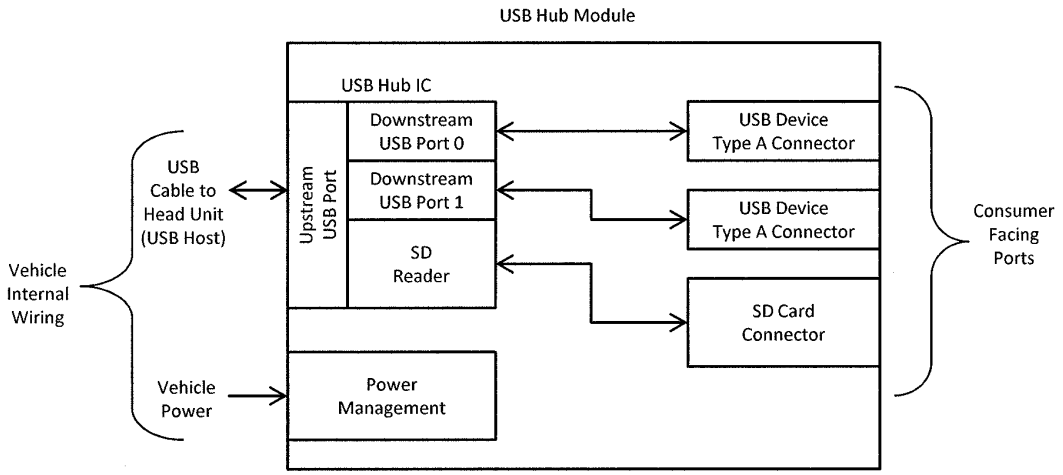
USB Hub Module
USB Hub IC
Upstream USB Port
Downstream USB Port 0
Downstream USB Port 1
SD Reader
Power Management
USB Cable to Head Unit (USB Host)
Vehicle Internal Wiring
Vehicle Power
USB Device Type A Connector
USB Device Type A Connector
SD Card Connector
Consumer Facing Ports

Figure 3

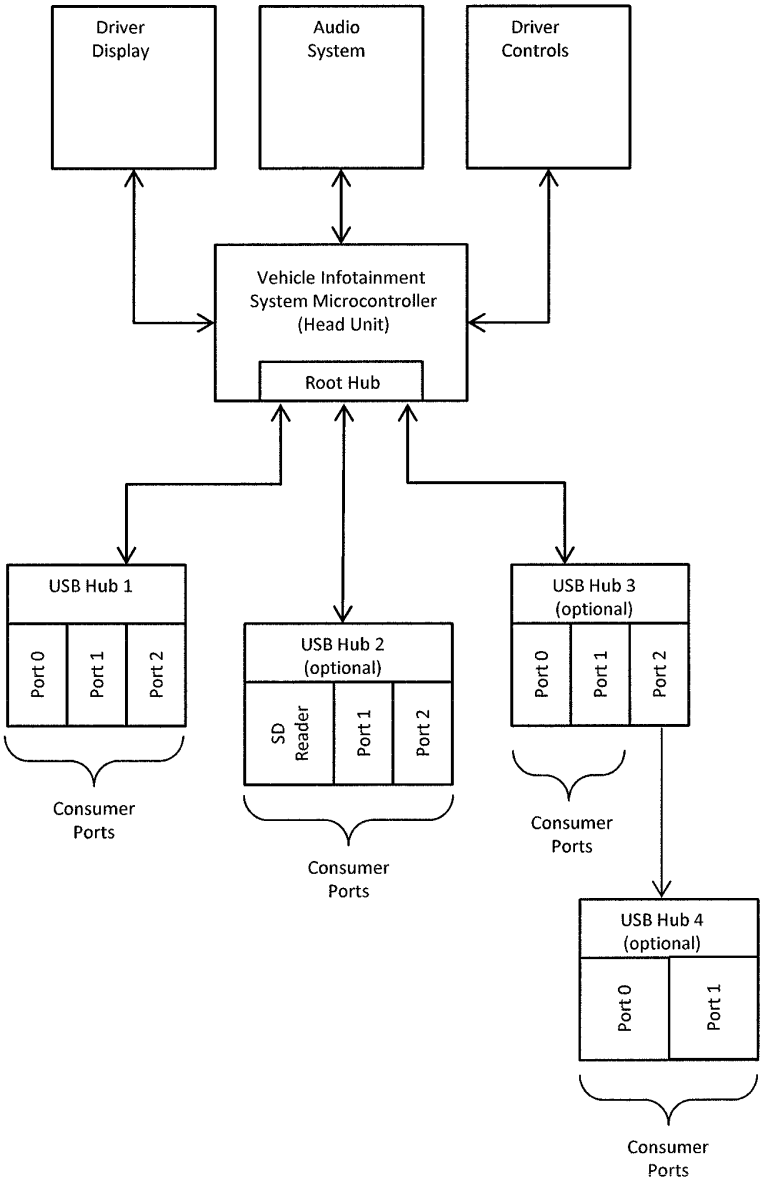
Driver Display
Audio System
Driver Controls
Vehicle Infotainment System Microcontroller (Head Unit)
Root Hub
USB Hub 1
Port 0
Port 1
Port 2
Consumer Ports
USB Hub 2 (optional)
SD Reader
Port 1
Port 2
Consumer Ports
USB Hub 3 (optional)
Port 0
Port 1
Port 2
Consumer Ports
USB Hub 4 (optional)
Port 0
Port 1
Consumer Ports

Figure 4

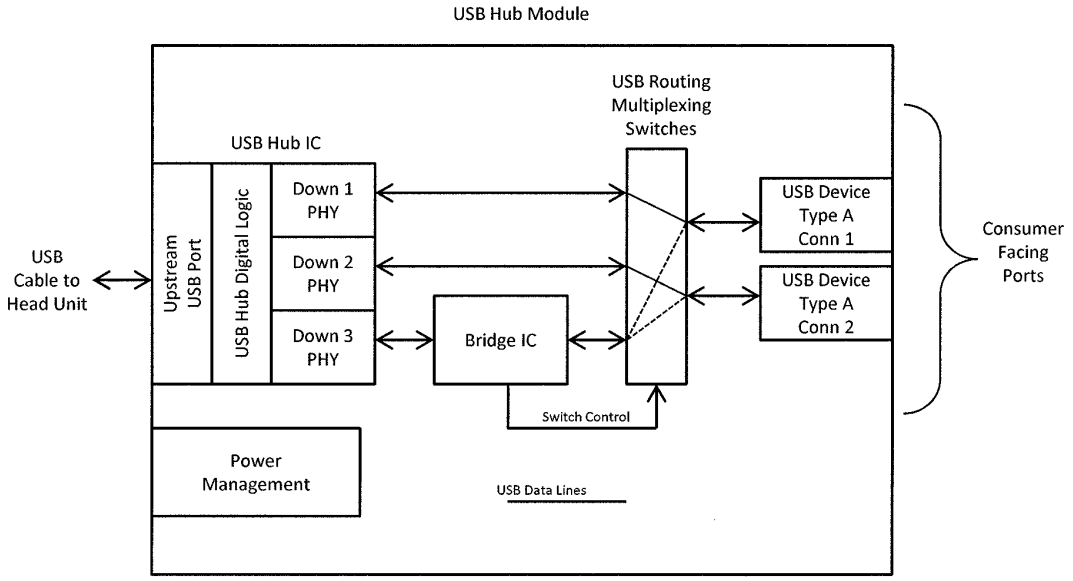
USB Hub Module
USB Routing Multiplexing Switches
USB Hub IC
USB Cable to Head Unit
Upstream USB Port
USB Hub Digital Logic
Down 1 PHY
Down 2 PHY
Down 3 PHY
Bridge IC
USB Device Type A Conn 1
USB Device Type A Conn 2
Consumer Facing Ports
Switch Control
Power Management
USB Data Lines

Figure 5

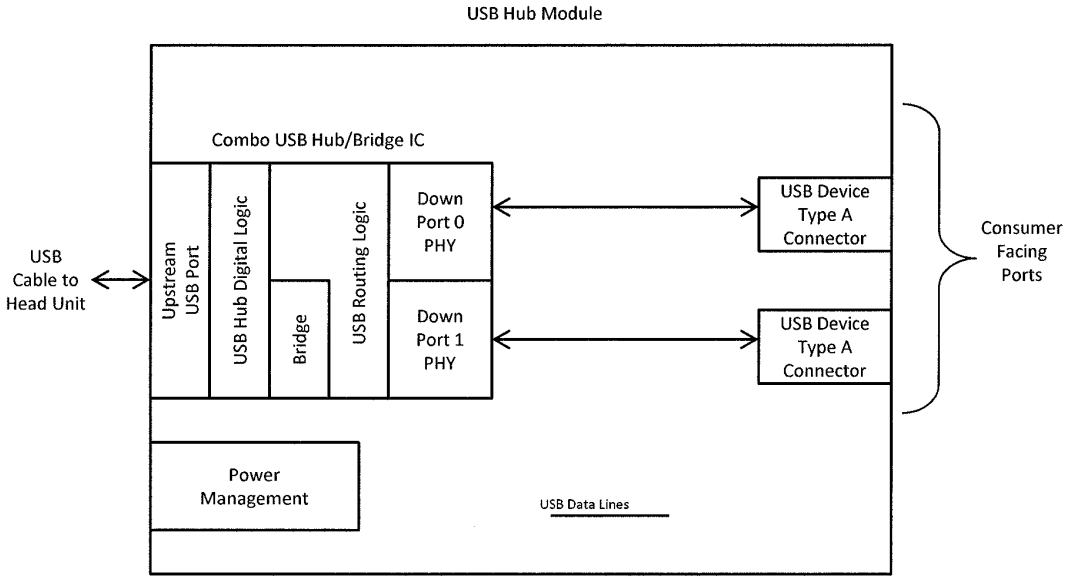
USB Hub Module
Combo USB Hub/Bridge IC
USB Cable to Head Unit
Upstream USB Port
USB Hub Digital Logic
Bridge
USB Routing Logic
Down Port 0 PHY
Down Port 1 PHY
USB Device Type A Connector
USB Device Type A Connector
Consumer Facing Ports
Power Management
USB Data Lines

Figure 6

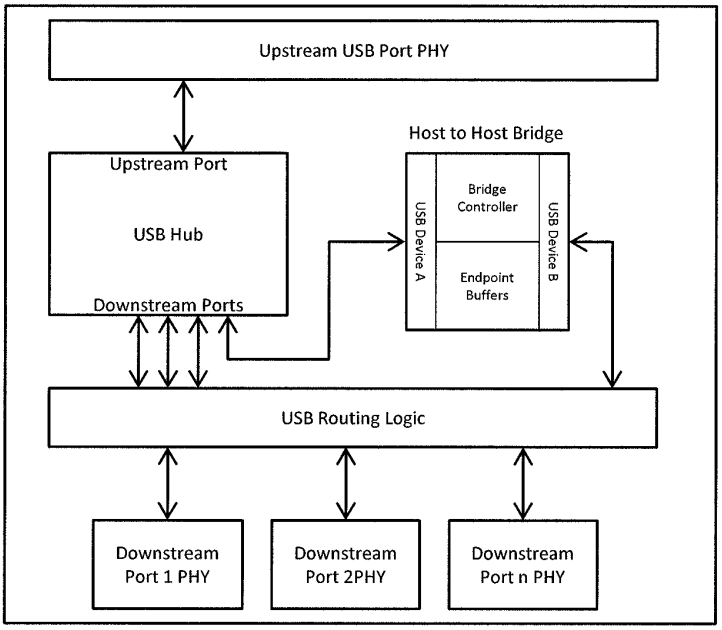
Upstream USB Port PHY
Host to Host Bridge
Upstream Port
USB Hub
Downstream Ports
Bridge Controller
Endpoint Buffers
USB Device A
USB Device B
USB Routing Logic
Downstream Port 1 PHY
Downstream Port 2PHY
Downstream Port n PHY

Figure 7

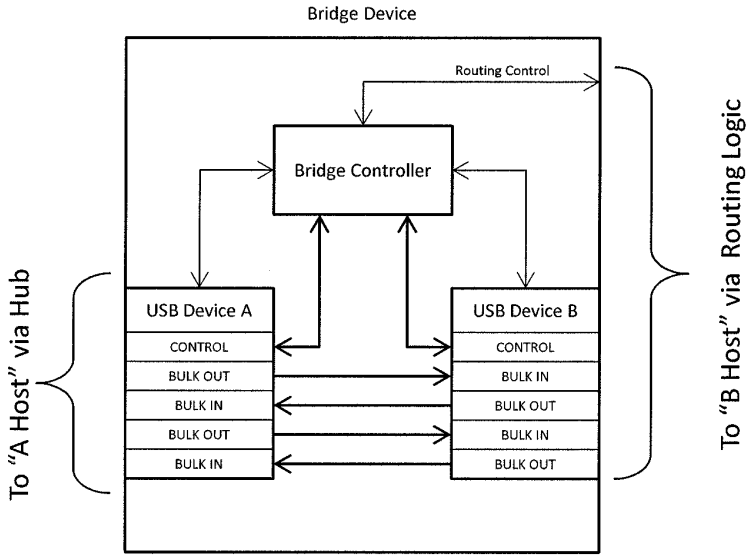
Bridge Device
Routing Control
Bridge Controller
USB Device A
CONTROL
BULK OUT
BULK IN
BULK OUT
BULK IN
USB Device B
CONTROL
BULK IN
BULK OUT
BULK IN
BULK OUT
To "A Host" via Hub
To "B Host" via Routing Logic

Figure 8

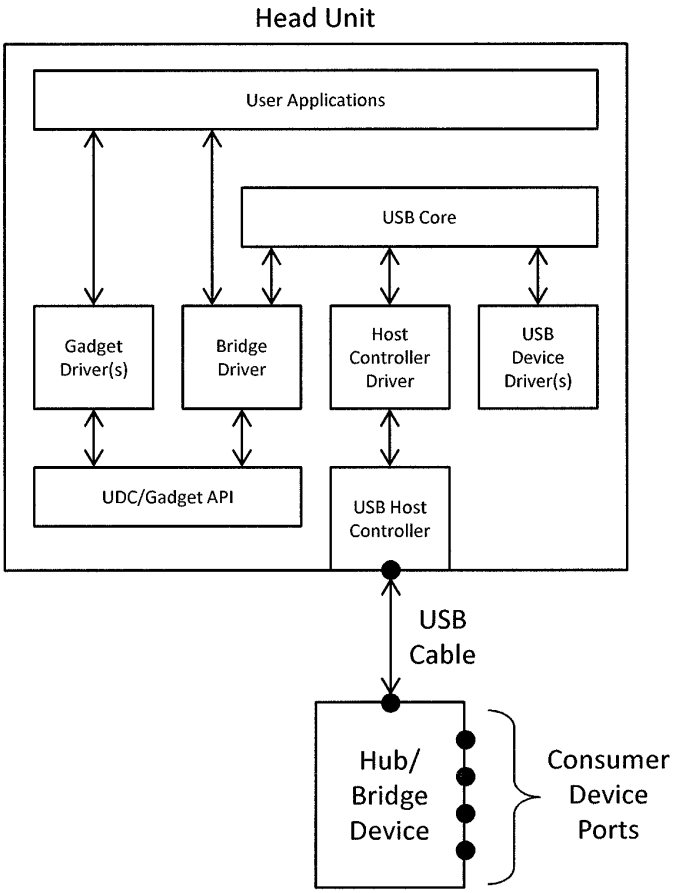
Head Unit
User Applications
USB Core
Gadget Driver(s)
Bridge Driver
Host Controller Driver
USB Device Driver(s)
UDC/Gadget API
USB Host Controller
USB Cable
Hub/ Bridge Device
Consumer Device Ports

Electronic Patent Application Fee Transmittal

Application Number:	
Filing Date:	
Title of Invention:	FLEXIBLE MOBILE DEVICE CONNECTIVITY TO AUTOMOTIVE SYSTEMS WITH USB HUBS
First Named Inventor/Applicant Name:	Robert Voto
Filer:	James R. Foley/Amy Lazzari
Attorney Docket Number:	40651-163154

Filed as Small Entity

Utility under 35 USC 111(a) Filing Fees

Description	Fee Code	Quantity	Amount	Sub-Total in USD($)
Basic Filing:				
Utility filing Fee (Electronic filing)	4011	1	70	70
Utility Search Fee	2111	1	300	300
Utility Examination Fee	2311	1	360	360
Pages:				
Claims:				
Claims in excess of 20	2202	2	40	80
Miscellaneous-Filing:				
Late Filing Fee for Oath or Declaration	2051	1	70	70

Description	Fee Code	Quantity	Amount	Sub-Total in USD($)
Petition:				
Patent-Appeals-and-Interference:				
Post-Allowance-and-Post-Issuance:				
Extension-of-Time:				
Miscellaneous:				
			Total in USD ($)	**880**

Electronic Acknowledgement Receipt

EFS ID:	20156196
Application Number:	14487947
International Application Number:	
Confirmation Number:	2147
Title of Invention:	FLEXIBLE MOBILE DEVICE CONNECTIVITY TO AUTOMOTIVE SYSTEMS WITH USB HUBS
First Named Inventor/Applicant Name:	Robert Voto
Customer Number:	279
Filer:	James R. Foley/Amy Lazzari
Filer Authorized By:	James R. Foley
Attorney Docket Number:	40651-163154
Receipt Date:	16-SEP-2014
Filing Date:	
Time Stamp:	17:27:21
Application Type:	Utility under 35 USC 111(a)

Payment information:

Submitted with Payment	yes
Payment Type	Credit Card
Payment was successfully received in RAM	$880
RAM confirmation Number	4127
Deposit Account	201495
Authorized User	FOLEY, JAMES R.

The Director of the USPTO is hereby authorized to charge indicated fees and credit any overpayment as follows:

Charge any Additional Fees required under 37 C.F.R. Section 1.16 (National application filing, search, and examination fees)

Charge any Additional Fees required under 37 C.F.R. Section 1.17 (Patent application and reexamination processing fees)

Charge any Additional Fees required under 37 C.F.R. Section 1.19 (Document supply fees)

Charge any Additional Fees required under 37 C.F.R. Section 1.21 (Miscellaneous fees and charges)

File Listing:

Document Number	Document Description	File Name	File Size(Bytes)/ Message Digest	Multi Part /.zip	Pages (if appl.)
1	Application Data Sheet	aia0014_Unwired_Formal.pdf	1561513 92b347bb43a3495bc97f5dfa341f605c6a5c383e	no	7
Warnings:					
Information:					
2		Unwired_App.pdf	2147526 4dbe3e8fbfdf18c619ecd71b870c6191d3f602de	yes	32

	Multipart Description/PDF files in .zip description		
	Document Description	**Start**	**End**
	Specification	1	19
	Claims	20	23
	Abstract	24	24
	Drawings-only black and white line drawings	25	32

Warnings:					
Information:					
3	Fee Worksheet (SB06)	fee-info.pdf	38234 2891d40c38a2fd0cbe7a44814368e2cb41430bf2	no	2
Warnings:					
Information:					
			Total Files Size (in bytes):	3747273	

This Acknowledgement Receipt evidences receipt on the noted date by the USPTO of the indicated documents, characterized by the applicant, and including page counts, where applicable. It serves as evidence of receipt similar to a Post Card, as described in MPEP 503.

New Applications Under 35 U.S.C. 111
If a new application is being filed and the application includes the necessary components for a filing date (see 37 CFR 1.53(b)-(d) and MPEP 506), a Filing Receipt (37 CFR 1.54) will be issued in due course and the date shown on this Acknowledgement Receipt will establish the filing date of the application.

National Stage of an International Application under 35 U.S.C. 371
If a timely submission to enter the national stage of an international application is compliant with the conditions of 35 U.S.C. 371 and other applicable requirements a Form PCT/DO/EO/903 indicating acceptance of the application as a national stage submission under 35 U.S.C. 371 will be issued in addition to the Filing Receipt, in due course.

New International Application Filed with the USPTO as a Receiving Office
If a new international application is being filed and the international application includes the necessary components for an international filing date (see PCT Article 11 and MPEP 1810), a Notification of the International Application Number and of the International Filing Date (Form PCT/RO/105) will be issued in due course, subject to prescriptions concerning national security, and the date shown on this Acknowledgement Receipt will establish the international filing date of the application.

PTO/AIA/01 (06-12)
Approved for use through 01/31/2014. OMB 0651-0032
U.S. Patent and Trademark Office; U.S. DEPARTMENT OF COMMERCE
Under the Paperwork Reduction Act of 1995, no persons are required to respond to a collection of information unless it displays a valid OMB control number.

DECLARATION (37 CFR 1.63) FOR UTILITY OR DESIGN APPLICATION USING AN APPLICATION DATA SHEET (37 CFR 1.76)

Title of Invention: FLEXIBLE MOBILE DEVICE CONNECTIVITY TO AUTOMOTIVE SYSTEMS WITH USB HUBS

As the below named inventor, I hereby declare that:

This declaration is directed to:

- ☐ The attached application, or
- ☒ United States application or PCT international application number 14/487,947 filed on September 16, 2014.

The above-identified application was made or authorized to be made by me.

I believe that I am the original inventor or an original joint inventor of a claimed invention in the application.

I hereby acknowledge that any willful false statement made in this declaration is punishable under 18 U.S.C. 1001 by fine or imprisonment of not more than five (5) years, or both.

WARNING:

Petitioner/applicant is cautioned to avoid submitting personal information in documents filed in a patent application that may contribute to identity theft. Personal information such as social security numbers, bank account numbers, or credit card numbers (other than a check or credit card authorization form PTO-2038 submitted for payment purposes) is never required by the USPTO to support a petition or an application. If this type of personal information is included in documents submitted to the USPTO, petitioners/applicants should consider redacting such personal information from the documents before submitting them to the USPTO. Petitioner/applicant is advised that the record of a patent application is available to the public after publication of the application (unless a non-publication request in compliance with 37 CFR 1.213(a) is made in the application) or issuance of a patent. Furthermore, the record from an abandoned application may also be available to the public if the application is referenced in a published application or an issued patent (see 37 CFR 1.14). Checks and credit card authorization forms PTO-2038 submitted for payment purposes are not retained in the application file and therefore are not publicly available.

LEGAL NAME OF INVENTOR

Inventor: Craig Petku Date (Optional) :

Signature:

Note: An application data sheet (PTO/SB/14 or equivalent), including naming the entire inventive entity, must accompany this form or must have been previously filed. Use an additional PTO/AIA/01 form for each additional inventor.

This collection of information is required by 35 U.S.C. 115 and 37 CFR 1.63. The information is required to obtain or retain a benefit by the public which is to file (and by the USPTO to process) an application. Confidentiality is governed by 35 U.S.C. 122 and 37 CFR 1.11 and 1.14. This collection is estimated to take 1 minute to complete, including gathering, preparing, and submitting the completed application form to the USPTO. Time will vary depending upon the individual case. Any comments on the amount of time you require to complete this form and/or suggestions for reducing this burden, should be sent to the Chief Information Officer, U.S. Patent and Trademark Office, U.S. Department of Commerce, P.O. Box 1450, Alexandria, VA 22313-1450. DO NOT SEND FEES OR COMPLETED FORMS TO THIS ADDRESS. **SEND TO: Commissioner for Patents, P.O. Box 1450, Alexandria, VA 22313-1450.**

If you need assistance in completing the form, call 1-800-PTO-9199 and select option 2.

PTO/AIA/01 (06-12)
Approved for use through 01/31/2014. OMB 0651-0032
U.S. Patent and Trademark Office; U.S. DEPARTMENT OF COMMERCE
Under the Paperwork Reduction Act of 1995, no persons are required to respond to a collection of information unless it displays a valid OMB control number.

DECLARATION (37 CFR 1.63) FOR UTILITY OR DESIGN APPLICATION USING AN APPLICATION DATA SHEET (37 CFR 1.76)

Title of Invention	FLEXIBLE MOBILE DEVICE CONNECTIVITY TO AUTOMOTIVE SYSTEMS WITH USB HUBS

As the below named inventor, I hereby declare that:

This declaration is directed to:

☐ The attached application, or

☒ United States application or PCT international application number 14/487,947

filed on September 16, 2014

The above-identified application was made or authorized to be made by me.

I believe that I am the original inventor or an original joint inventor of a claimed invention in the application.

I hereby acknowledge that any willful false statement made in this declaration is punishable under 18 U.S.C. 1001 by fine or imprisonment of not more than five (5) years, or both.

WARNING:

Petitioner/applicant is cautioned to avoid submitting personal information in documents filed in a patent application that may contribute to identity theft. Personal information such as social security numbers, bank account numbers, or credit card numbers (other than a check or credit card authorization form PTO-2038 submitted for payment purposes) is never required by the USPTO to support a petition or an application. If this type of personal information is included in documents submitted to the USPTO, petitioners/applicants should consider redacting such personal information from the documents before submitting them to the USPTO. Petitioner/applicant is advised that the record of a patent application is available to the public after publication of the application (unless a non-publication request in compliance with 37 CFR 1.213(a) is made in the application) or issuance of a patent. Furthermore, the record from an abandoned application may also be available to the public if the application is referenced in a published application or an issued patent (see 37 CFR 1.14). Checks and credit card authorization forms PTO-2038 submitted for payment purposes are not retained in the application file and therefore are not publicly available.

LEGAL NAME OF INVENTOR

Inventor: Shyambabu Yeda Date (Optional) :

Signature:

Note: An application data sheet (PTO/SB/14 or equivalent), including naming the entire inventive entity, must accompany this form or must have been previously filed. Use an additional PTO/AIA/01 form for each additional inventor.

This collection of information is required by 35 U.S.C. 115 and 37 CFR 1.63. The information is required to obtain or retain a benefit by the public which is to file (and by the USPTO to process) an application. Confidentiality is governed by 35 U.S.C. 122 and 37 CFR 1.11 and 1.14. This collection is estimated to take 1 minute to complete, including gathering, preparing, and submitting the completed application form to the USPTO. Time will vary depending upon the individual case. Any comments on the amount of time you require to complete this form and/or suggestions for reducing this burden, should be sent to the Chief Information Officer, U.S. Patent and Trademark Office, U.S. Department of Commerce, P.O. Box 1450, Alexandria, VA 22313-1450. DO NOT SEND FEES OR COMPLETED FORMS TO THIS ADDRESS. SEND TO: **Commissioner for Patents, P.O. Box 1450, Alexandria, VA 22313-1450.**

If you need assistance in completing the form, call 1-800-PTO-9199 and select option 2.

PTO/AIA/01 (06-12)
Approved for use through 01/31/2014. OMB 0651-0032
U.S. Patent and Trademark Office; U.S. DEPARTMENT OF COMMERCE
Under the Paperwork Reduction Act of 1995, no persons are required to respond to a collection of information unless it displays a valid OMB control number.

DECLARATION (37 CFR 1.63) FOR UTILITY OR DESIGN APPLICATION USING AN APPLICATION DATA SHEET (37 CFR 1.76)

Title of Invention	FLEXIBLE MOBILE DEVICE CONNECTIVITY TO AUTOMOTIVE SYSTEMS WITH USB HUBS

As the below named inventor, I hereby declare that:

This declaration is directed to:

☐ The attached application, or

☒ United States application or PCT international application number 14/487,947 filed on September 16, 2014.

The above-identified application was made or authorized to be made by me.

I believe that I am the original inventor or an original joint inventor of a claimed invention in the application.

I hereby acknowledge that any willful false statement made in this declaration is punishable under 18 U.S.C. 1001 by fine or imprisonment of not more than five (5) years, or both.

WARNING:

Petitioner/applicant is cautioned to avoid submitting personal information in documents filed in a patent application that may contribute to identity theft. Personal information such as social security numbers, bank account numbers, or credit card numbers (other than a check or credit card authorization form PTO-2038 submitted for payment purposes) is never required by the USPTO to support a petition or an application. If this type of personal information is included in documents submitted to the USPTO, petitioners/applicants should consider redacting such personal information from the documents before submitting them to the USPTO. Petitioner/applicant is advised that the record of a patent application is available to the public after publication of the application (unless a non-publication request in compliance with 37 CFR 1.213(a) is made in the application) or issuance of a patent. Furthermore, the record from an abandoned application may also be available to the public if the application is referenced in a published application or an issued patent (see 37 CFR 1.14). Checks and credit card authorization forms PTO-2038 submitted for payment purposes are not retained in the application file and therefore are not publicly available.

LEGAL NAME OF INVENTOR

Inventor: Robert Voto Date (Optional): _____

Signature: Robert Voto

Note: An application data sheet (PTO/SB/14 or equivalent), including naming the entire inventive entity, must accompany this form or must have been previously filed. Use an additional PTO/AIA/01 form for each additional inventor.

This collection of information is required by 35 U.S.C. 115 and 37 CFR 1.63. The information is required to obtain or retain a benefit by the public which is to file (and by the USPTO to process) an application. Confidentiality is governed by 35 U.S.C. 122 and 37 CFR 1.11 and 1.14. This collection is estimated to take 1 minute to complete, including gathering, preparing, and submitting the completed application form to the USPTO. Time will vary depending upon the individual case. Any comments on the amount of time you require to complete this form and/or suggestions for reducing this burden, should be sent to the Chief Information Officer, U.S. Patent and Trademark Office, U.S. Department of Commerce, P.O. Box 1450, Alexandria, VA 22313-1450. DO NOT SEND FEES OR COMPLETED FORMS TO THIS ADDRESS. SEND TO: Commissioner for Patents, P.O. Box 1450, Alexandria, VA 22313-1450.

If you need assistance in completing the form, call 1-800-PTO-9199 and select option 2.

Electronic Acknowledgement Receipt

EFS ID:	20200832
Application Number:	14487947
International Application Number:	
Confirmation Number:	2147
Title of Invention:	FLEXIBLE MOBILE DEVICE CONNECTIVITY TO AUTOMOTIVE SYSTEMS WITH USB HUBS
First Named Inventor/Applicant Name:	Robert Voto
Customer Number:	279
Filer:	James R. Foley/Amy Lazzari
Filer Authorized By:	James R. Foley
Attorney Docket Number:	40651-163154
Receipt Date:	22-SEP-2014
Filing Date:	16-SEP-2014
Time Stamp:	11:53:24
Application Type:	Utility under 35 USC 111(a)

Payment information:

Submitted with Payment	no

File Listing:

Document Number	Document Description	File Name	File Size(Bytes)/ Message Digest	Multi Part /.zip	Pages (if appl.)
1	Oath or Declaration filed	Declarations.pdf	321057 ebe9d29618c9c3c922dc9aaf07000defd6d75f90	no	3

Warnings:

Information:

Total Files Size (in bytes):	321057

This Acknowledgement Receipt evidences receipt on the noted date by the USPTO of the indicated documents, characterized by the applicant, and including page counts, where applicable. It serves as evidence of receipt similar to a Post Card, as described in MPEP 503.

New Applications Under 35 U.S.C. 111
If a new application is being filed and the application includes the necessary components for a filing date (see 37 CFR 1.53(b)-(d) and MPEP 506), a Filing Receipt (37 CFR 1.54) will be issued in due course and the date shown on this Acknowledgement Receipt will establish the filing date of the application.

National Stage of an International Application under 35 U.S.C. 371
If a timely submission to enter the national stage of an international application is compliant with the conditions of 35 U.S.C. 371 and other applicable requirements a Form PCT/DO/EO/903 indicating acceptance of the application as a national stage submission under 35 U.S.C. 371 will be issued in addition to the Filing Receipt, in due course.

New International Application Filed with the USPTO as a Receiving Office
If a new international application is being filed and the international application includes the necessary components for an international filing date (see PCT Article 11 and MPEP 1810), a Notification of the International Application Number and of the International Filing Date (Form PCT/RO/105) will be issued in due course, subject to prescriptions concerning national security, and the date shown on this Acknowledgement Receipt will establish the international filing date of the application.

PATENT APPLICATION FEE DETERMINATION RECORD Substitute for Form PTO-875	Application or Docket Number 14/487,947

APPLICATION AS FILED - PART I

FOR	(Column 1) NUMBER FILED	(Column 2) NUMBER EXTRA	SMALL ENTITY RATE($)	SMALL ENTITY FEE($)	OR	OTHER THAN SMALL ENTITY RATE($)	OTHER THAN SMALL ENTITY FEE($)
BASIC FEE (37 CFR 1.16(a), (b), or (c))	N/A	N/A	N/A	70		N/A	
SEARCH FEE (37 CFR 1.16(k), (i), or (m))	N/A	N/A	N/A	300		N/A	
EXAMINATION FEE (37 CFR 1.16(o), (p), or (q))	N/A	N/A	N/A	360		N/A	
TOTAL CLAIMS (37 CFR 1.16(i))	22 minus 20 =	* 2	x 40 =	80	OR		
INDEPENDENT CLAIMS (37 CFR 1.16(h))	1 minus 3 =	*	x 210 =	0.00			
APPLICATION SIZE FEE (37 CFR 1.16(s))	If the specification and drawings exceed 100 sheets of paper, the application size fee due is $310 ($155 for small entity) for each additional 50 sheets or fraction thereof. See 35 U.S.C. 41(a)(1)(G) and 37 CFR 1.16(s).			0.00			
MULTIPLE DEPENDENT CLAIM PRESENT (37 CFR 1.16(j))				0.00			
* If the difference in column 1 is less than zero, enter "0" in column 2.			TOTAL	810		TOTAL	

APPLICATION AS AMENDED - PART II

		(Column 1) CLAIMS REMAINING AFTER AMENDMENT		(Column 2) HIGHEST NUMBER PREVIOUSLY PAID FOR	(Column 3) PRESENT EXTRA	SMALL ENTITY RATE($)	SMALL ENTITY ADDITIONAL FEE($)	OR	OTHER THAN SMALL ENTITY RATE($)	OTHER THAN SMALL ENTITY ADDITIONAL FEE($)
AMENDMENT A	Total (37 CFR 1.16(i))	*	Minus	**	=	x =		OR	x =	
AMENDMENT A	Independent (37 CFR 1.16(h))	*	Minus	***	=	x =		OR	x =	
AMENDMENT A	Application Size Fee (37 CFR 1.16(s))									
AMENDMENT A	FIRST PRESENTATION OF MULTIPLE DEPENDENT CLAIM (37 CFR 1.16(j))							OR		
						TOTAL ADD'L FEE		OR	TOTAL ADD'L FEE	

		(Column 1) CLAIMS REMAINING AFTER AMENDMENT		(Column 2) HIGHEST NUMBER PREVIOUSLY PAID FOR	(Column 3) PRESENT EXTRA	RATE($)	ADDITIONAL FEE($)		RATE($)	ADDITIONAL FEE($)
AMENDMENT B	Total (37 CFR 1.16(i))	*	Minus	**	=	x =		OR	x =	
AMENDMENT B	Independent (37 CFR 1.16(h))	*	Minus	***	=	x =		OR	x =	
AMENDMENT B	Application Size Fee (37 CFR 1.16(s))									
AMENDMENT B	FIRST PRESENTATION OF MULTIPLE DEPENDENT CLAIM (37 CFR 1.16(j))							OR		
						TOTAL ADD'L FEE		OR	TOTAL ADD'L FEE	

* If the entry in column 1 is less than the entry in column 2, write "0" in column 3.
** If the "Highest Number Previously Paid For" IN THIS SPACE is less than 20, enter "20".
*** If the "Highest Number Previously Paid For" IN THIS SPACE is less than 3, enter "3".
The "Highest Number Previously Paid For" (Total or Independent) is the highest found in the appropriate box in column 1.

UNITED STATES PATENT AND TRADEMARK OFFICE

UNITED STATES DEPARTMENT OF COMMERCE
United States Patent and Trademark Office
Address: COMMISSIONER FOR PATENTS
P.O. Box 1450
Alexandria, Virginia 22313-1450
www.uspto.gov

APPLICATION NUMBER	FILING or 371(c) DATE	GRP ART UNIT	FIL FEE REC'D	ATTY.DOCKET.NO	TOT CLAIMS	IND CLAIMS
14/487,947	09/16/2014	2111	880	40651-163154	22	1

CONFIRMATION NO. 2147

FILING RECEIPT

279
MARIA E. KITZ
CLARK HILL PLC
150 NORTH MICHIGAN AVENUE
SUITE 2700
CHICAGO, IL 60601

OC000000070919006

Date Mailed: 09/23/2014

Receipt is acknowledged of this non-provisional patent application. The application will be taken up for examination in due course. Applicant will be notified as to the results of the examination. Any correspondence concerning the application must include the following identification information: the U.S. APPLICATION NUMBER, FILING DATE, NAME OF APPLICANT, and TITLE OF INVENTION. Fees transmitted by check or draft are subject to collection. Please verify the accuracy of the data presented on this receipt. **If an error is noted on this Filing Receipt, please submit a written request for a Filing Receipt Correction. Please provide a copy of this Filing Receipt with the changes noted thereon. If you received a "Notice to File Missing Parts" for this application, please submit any corrections to this Filing Receipt with your reply to the Notice. When the USPTO processes the reply to the Notice, the USPTO will generate another Filing Receipt incorporating the requested corrections**

Inventor(s)

Robert Voto, Clarkston, MI;
Shyambabu Yeda, Rochester Hills, MI;
Craig Petku, Clarkston, MI;

Applicant(s)

Unwired Technology LLC, Woodbury, NY

Power of Attorney: None

Domestic Priority data as claimed by applicant

This appln claims benefit of 61/882,915 09/26/2013

Foreign Applications for which priority is claimed (You may be eligible to benefit from the **Patent Prosecution Highway** program at the USPTO. Please see http://www.uspto.gov for more information.) - None.
Foreign application information must be provided in an Application Data Sheet in order to constitute a claim to foreign priority. See 37 CFR 1.55 and 1.76.

Permission to Access - A proper **Authorization to Permit Access to Application by Participating Offices** (PTO/SB/39 or its equivalent) has been received by the USPTO.

If Required, Foreign Filing License Granted: 09/22/2014
The country code and number of your priority application, to be used for filing abroad under the Paris Convention, is **US 14/487,947**
Projected Publication Date: 03/26/2015
Non-Publication Request: No
Early Publication Request: No

Microchip Ex. 1002, p. 51
Microchip v. Aptiv
IPR2024-00495

**** SMALL ENTITY ****

Title

FLEXIBLE MOBILE DEVICE CONNECTIVITY TO AUTOMOTIVE SYSTEMS WITH USB HUBS

Preliminary Class

710

Statement under 37 CFR 1.55 or 1.78 for AIA (First Inventor to File) Transition Applications: No

PROTECTING YOUR INVENTION OUTSIDE THE UNITED STATES

Since the rights granted by a U.S. patent extend only throughout the territory of the United States and have no effect in a foreign country, an inventor who wishes patent protection in another country must apply for a patent in a specific country or in regional patent offices. Applicants may wish to consider the filing of an international application under the Patent Cooperation Treaty (PCT). An international (PCT) application generally has the same effect as a regular national patent application in each PCT-member country. The PCT process **simplifies** the filing of patent applications on the same invention in member countries, but **does not result** in a grant of "an international patent" and does not eliminate the need of applicants to file additional documents and fees in countries where patent protection is desired.

Almost every country has its own patent law, and a person desiring a patent in a particular country must make an application for patent in that country in accordance with its particular laws. Since the laws of many countries differ in various respects from the patent law of the United States, applicants are advised to seek guidance from specific foreign countries to ensure that patent rights are not lost prematurely.

Applicants also are advised that in the case of inventions made in the United States, the Director of the USPTO must issue a license before applicants can apply for a patent in a foreign country. The filing of a U.S. patent application serves as a request for a foreign filing license. The application's filing receipt contains further information and guidance as to the status of applicant's license for foreign filing.

Applicants may wish to consult the USPTO booklet, "General Information Concerning Patents" (specifically, the section entitled "Treaties and Foreign Patents") for more information on timeframes and deadlines for filing foreign patent applications. The guide is available either by contacting the USPTO Contact Center at 800-786-9199, or it can be viewed on the USPTO website at http://www.uspto.gov/web/offices/pac/doc/general/index.html.

For information on preventing theft of your intellectual property (patents, trademarks and copyrights), you may wish to consult the U.S. Government website, http://www.stopfakes.gov. Part of a Department of Commerce initiative, this website includes self-help "toolkits" giving innovators guidance on how to protect intellectual property in specific countries such as China, Korea and Mexico. For questions regarding patent enforcement issues, applicants may call the U.S. Government hotline at 1-866-999-HALT (1-866-999-4258).

Microchip Ex. 1002, p. 52
Microchip v. Aptiv
IPR2024-00495

LICENSE FOR FOREIGN FILING UNDER

Title 35, United States Code, Section 184

Title 37, Code of Federal Regulations, 5.11 & 5.15

GRANTED

The applicant has been granted a license under 35 U.S.C. 184, if the phrase "IF REQUIRED, FOREIGN FILING LICENSE GRANTED" followed by a date appears on this form. Such licenses are issued in all applications where the conditions for issuance of a license have been met, regardless of whether or not a license may be required as set forth in 37 CFR 5.15. The scope and limitations of this license are set forth in 37 CFR 5.15(a) unless an earlier license has been issued under 37 CFR 5.15(b). The license is subject to revocation upon written notification. The date indicated is the effective date of the license, unless an earlier license of similar scope has been granted under 37 CFR 5.13 or 5.14.

This license is to be retained by the licensee and may be used at any time on or after the effective date thereof unless it is revoked. This license is automatically transferred to any related applications(s) filed under 37 CFR 1.53(d). This license is not retroactive.

The grant of a license does not in any way lessen the responsibility of a licensee for the security of the subject matter as imposed by any Government contract or the provisions of existing laws relating to espionage and the national security or the export of technical data. Licensees should apprise themselves of current regulations especially with respect to certain countries, of other agencies, particularly the Office of Defense Trade Controls, Department of State (with respect to Arms, Munitions and Implements of War (22 CFR 121-128)); the Bureau of Industry and Security, Department of Commerce (15 CFR parts 730-774); the Office of Foreign AssetsControl, Department of Treasury (31 CFR Parts 500+) and the Department of Energy.

NOT GRANTED

No license under 35 U.S.C. 184 has been granted at this time, if the phrase "IF REQUIRED, FOREIGN FILING LICENSE GRANTED" DOES NOT appear on this form. Applicant may still petition for a license under 37 CFR 5.12, if a license is desired before the expiration of 6 months from the filing date of the application. If 6 months has lapsed from the filing date of this application and the licensee has not received any indication of a secrecy order under 35 U.S.C. 181, the licensee may foreign file the application pursuant to 37 CFR 5.15(b).

SelectUSA

The United States represents the largest, most dynamic marketplace in the world and is an unparalleled location for business investment, innovation, and commercialization of new technologies. The U.S. offers tremendous resources and advantages for those who invest and manufacture goods here. Through SelectUSA, our nation works to promote and facilitate business investment. SelectUSA provides information assistance to the international investor community; serves as an ombudsman for existing and potential investors; advocates on behalf of U.S. cities, states, and regions competing for global investment; and counsels U.S. economic development organizations on investment attraction best practices. To learn more about why the United States is the best country in the world to develop technology, manufacture products, deliver services, and grow your business, visit http://www.SelectUSA.gov or call +1-202-482-6800.

Doc Code: PA..
Document Description: Power of Attorney

PTO/AIA/82B (07-13)
Approved for use through 11/30/2014. OMB 0651-0031
U.S. Patent and Trademark Office; U.S. DEPARTMENT OF COMMERCE
Under the Paperwork Reduction Act of 1995, no persons are required to respond to a collection of information unless it displays a valid OMB control number

POWER OF ATTORNEY BY APPLICANT

I hereby revoke all previous powers of attorney given in the application identified in either the attached transmittal letter or the boxes below.

Application Number	Filing Date
14/487,947	September 16, 2014

(Note: The boxes above may be left blank if information is provided on form PTO/AIA/82A.)

☑ I hereby appoint the Patent Practitioner(s) associated with the following Customer Number as my/our attorney(s) or agent(s), and to transact all business in the United States Patent and Trademark Office connected therewith for the application referenced in the attached transmittal letter (form PTO/AIA/82A) or identified above: 00279

OR

☐ I hereby appoint Practitioner(s) named in the attached list (form PTO/AIA/82C) as my/our attorney(s) or agent(s), and to transact all business in the United States Patent and Trademark Office connected therewith for the patent application referenced in the attached transmittal letter (form PTO/AIA/82A) or identified above. (Note: Complete form PTO/AIA/82C.)

Please recognize or change the correspondence address for the application identified in the attached transmittal letter or the boxes above to:

☑ The address associated with the above-mentioned Customer Number

OR

☐ The address associated with Customer Number:

OR

Firm or Individual Name					
Address					
City		State		Zip	
Country					
Telephone		Email			

I am the Applicant (if the Applicant is a juristic entity, list the Applicant name in the box):

Unwired Technology LLC

☐ Inventor or Joint Inventor (title not required below)

☐ Legal Representative of a Deceased or Legally Incapacitated Inventor (title not required below)

☑ Assignee or Person to Whom the Inventor is Under an Obligation to Assign (provide signer's title if applicant is a juristic entity)

☐ Person Who Otherwise Shows Sufficient Proprietary Interest (e.g., a petition under 37 CFR 1.46(b)(2) was granted in the application or is concurrently being filed with this document) (provide signer's title if applicant is a juristic entity)

SIGNATURE of Applicant for Patent

The undersigned (whose title is supplied below) is authorized to act on behalf of the applicant (e.g., where the applicant is a juristic entity)

Signature		Date (Optional)	
Name	Neil R. Collman		
Title	Finance Director		

NOTE: Signature - This form must be signed by the applicant in accordance with 37 CFR 1.33. See 37 CFR 1.4 for signature requirements and certifications. If more than one applicant, use multiple forms.

☑ Total of 1 forms are submitted.

This collection of information is required by 37 CFR 1.131, 1.32, and 1.33. The information is required to obtain or retain a benefit by the public which is to file (and by the USPTO to process) an application. Confidentiality is governed by 35 U.S.C. 122 and 37 CFR 1.11 and 1.14. This collection is estimated to take 3 minutes to complete, including gathering, preparing, and submitting the completed application form to the USPTO. Time will vary depending upon the individual case. Any comments on the amount of time you require to complete this form and/or suggestions for reducing this burden, should be sent to the Chief Information Officer, U.S. Patent and Trademark Office, U.S. Department of Commerce, P.O. Box 1450, Alexandria, VA 22313-1450. DO NOT SEND FEES OR COMPLETED FORMS TO THIS ADDRESS. SEND TO: Commissioner for Patents, P.O. Box 1450, Alexandria, VA 22313-1450.

If you need assistance in completing the form, call 1-800-PTO-9199 and select option 2.

Electronic Acknowledgement Receipt

EFS ID:	20477706
Application Number:	14487947
International Application Number:	
Confirmation Number:	2147
Title of Invention:	FLEXIBLE MOBILE DEVICE CONNECTIVITY TO AUTOMOTIVE SYSTEMS WITH USB HUBS
First Named Inventor/Applicant Name:	Robert Voto
Customer Number:	279
Filer:	James R. Foley/Amy Lazzari
Filer Authorized By:	James R. Foley
Attorney Docket Number:	40651-163154
Receipt Date:	21-OCT-2014
Filing Date:	16-SEP-2014
Time Stamp:	16:52:52
Application Type:	Utility under 35 USC 111(a)

Payment information:

Submitted with Payment	no

File Listing:

Document Number	Document Description	File Name	File Size(Bytes)/ Message Digest	Multi Part /.zip	Pages (if appl.)
1	Power of Attorney	POA.pdf	120679 f9393a47fadfb977b10571828ea9713b177f5f27	no	1

Warnings:

Information:

Total Files Size (in bytes):	120679

This Acknowledgement Receipt evidences receipt on the noted date by the USPTO of the indicated documents, characterized by the applicant, and including page counts, where applicable. It serves as evidence of receipt similar to a Post Card, as described in MPEP 503.

New Applications Under 35 U.S.C. 111
If a new application is being filed and the application includes the necessary components for a filing date (see 37 CFR 1.53(b)-(d) and MPEP 506), a Filing Receipt (37 CFR 1.54) will be issued in due course and the date shown on this Acknowledgement Receipt will establish the filing date of the application.

National Stage of an International Application under 35 U.S.C. 371
If a timely submission to enter the national stage of an international application is compliant with the conditions of 35 U.S.C. 371 and other applicable requirements a Form PCT/DO/EO/903 indicating acceptance of the application as a national stage submission under 35 U.S.C. 371 will be issued in addition to the Filing Receipt, in due course.

New International Application Filed with the USPTO as a Receiving Office
If a new international application is being filed and the international application includes the necessary components for an international filing date (see PCT Article 11 and MPEP 1810), a Notification of the International Application Number and of the International Filing Date (Form PCT/RO/105) will be issued in due course, subject to prescriptions concerning national security, and the date shown on this Acknowledgement Receipt will establish the international filing date of the application.

UNITED STATES PATENT AND TRADEMARK OFFICE

UNITED STATES DEPARTMENT OF COMMERCE
United States Patent and Trademark Office
Address: COMMISSIONER FOR PATENTS
P.O. Box 1450
Alexandria, Virginia 22313-1450
www.uspto.gov

APPLICATION NUMBER	FILING OR 371(C) DATE	FIRST NAMED APPLICANT	ATTY. DOCKET NO./TITLE
14/487,947	09/16/2014	Robert Voto	40651-163154

CONFIRMATION NO. 2147

POA ACCEPTANCE LETTER

OC000000071493121

279
MARIA E. KITZ
CLARK HILL PLC
150 NORTH MICHIGAN AVENUE
SUITE 2700
CHICAGO, IL 60601

Date Mailed: 10/24/2014

NOTICE OF ACCEPTANCE OF POWER OF ATTORNEY

This is in response to the Power of Attorney filed 10/21/2014.

The Power of Attorney in this application is accepted. Correspondence in this application will be mailed to the above address as provided by 37 CFR 1.33.

/ttkim/

Office of Data Management, Application Assistance Unit (571) 272-4000, or (571) 272-4200, or 1-888-786-0101

PTO/SB/08a (01-10)
Approved for use through 07/31/2012. OMB 0651-0031
U.S. Patent and Trademark Office; U.S. DEPARTMENT OF COMMERCE

Under the Paperwork Reduction Act of 1995, no persons are required to respond to a collection of information unless it contains a valid OMB control number.

INFORMATION DISCLOSURE STATEMENT BY APPLICANT (Not for submission under 37 CFR 1.99)		
	Application Number	14487947
	Filing Date	2014-09-16
	First Named Inventor	Robert Voto
	Art Unit	2111
	Examiner Name	
	Attorney Docket Number	40651-163154

U.S.PATENTS						Remove
Examiner Initial*	Cite No	Patent Number	Kind Code[1]	Issue Date	Name of Patentee or Applicant of cited Document	Pages,Columns,Lines where Relevant Passages or Relevant Figures Appear
	1	7130656		2006-10-31	Okagaki et al.	
	2	7280802		2007-10-09	Grady	
If you wish to add additional U.S. Patent citation information please click the Add button.						Add

U.S.PATENT APPLICATION PUBLICATIONS						Remove
Examiner Initial*	Cite No	Publication Number	Kind Code[1]	Publication Date	Name of Patentee or Applicant of cited Document	Pages,Columns,Lines where Relevant Passages or Relevant Figures Appear
	1	20100260350		2010-10-14	Chutorash et al.	
	2	20070086724		2007-04-19	Grady et al.	
	3	20090117890		2009-05-07	Jacobsen et al.	
	4	20110054721		2011-03-03	Goodrich et al.	

INFORMATION DISCLOSURE STATEMENT BY APPLICANT (Not for submission under 37 CFR 1.99)	Application Number	14487947
	Filing Date	2014-09-16
	First Named Inventor	Robert Voto
	Art Unit	2111
	Examiner Name	
	Attorney Docket Number	40651-163154

	5	20110124300		2011-05-26	Sinai	
	6	20120134506		2012-05-31	DeBiasio et al.	
	7	20120191811		2012-07-26	Ng et al.	
	8	20120290859		2012-11-15	Saladin et al.	
	9	20130106750		2013-05-02	Kurosawa	
	10	20130053003		2013-02-28	King, II	

If you wish to add additional U.S. Published Application citation information please click the Add button. Add

FOREIGN PATENT DOCUMENTS Remove

Examiner Initial*	Cite No	Foreign Document Number[3]	Country Code[2] ¡	Kind Code[4]	Publication Date	Name of Patentee or Applicant of cited Document	Pages,Columns,Lines where Relevant Passages or Relevant Figures Appear	T[5]
	1							☐

If you wish to add additional Foreign Patent Document citation information please click the Add button Add

NON-PATENT LITERATURE DOCUMENTS Remove

Examiner Initials*	Cite No	Include name of the author (in CAPITAL LETTERS), title of the article (when appropriate), title of the item (book, magazine, journal, serial, symposium, catalog, etc), date, pages(s), volume-issue number(s), publisher, city and/or country where published.	T[5]

INFORMATION DISCLOSURE STATEMENT BY APPLICANT (Not for submission under 37 CFR 1.99)		
	Application Number	14487947
	Filing Date	2014-09-16
	First Named Inventor	Robert Voto
	Art Unit	2111
	Examiner Name	
	Attorney Docket Number	40651-163154

	1	AL-ANI, TARIK et al.; Android-based In-Vehicle Infotainment System (AIVI); IS PGD 2010, October 26, 2010, Dunedin, New Zealand	☐
	2	AL-ANI, TARIK; Android In-Vehicle Infotainment System (AIVI); June, 2011, Dunedin, New Zealand	☐
	3	ELLIS, BRIAN; USB in Automotive: Not Just for PCs Anymore; Cypress Semiconductor Corp.; September 7, 2006	☐
	4	KOCH, NIELS; The Car Entertainment System; InTech; 2011	☐

If you wish to add additional non-patent literature document citation information please click the Add button Add

EXAMINER SIGNATURE

Examiner Signature		Date Considered	

*EXAMINER: Initial if reference considered, whether or not citation is in conformance with MPEP 609. Draw line through a citation if not in conformance and not considered. Include copy of this form with next communication to applicant.

[1] See Kind Codes of USPTO Patent Documents at www.USPTO.GOV or MPEP 901.04. [2] Enter office that issued the document, by the two-letter code (WIPO Standard ST.3). [3] For Japanese patent documents, the indication of the year of the reign of the Emperor must precede the serial number of the patent document. [4] Kind of document by the appropriate symbols as indicated on the document under WIPO Standard ST.16 if possible. [5] Applicant is to place a check mark here if English language translation is attached.

INFORMATION DISCLOSURE STATEMENT BY APPLICANT (Not for submission under 37 CFR 1.99)	Application Number	14487947
	Filing Date	2014-09-16
	First Named Inventor	Robert Voto
	Art Unit	2111
	Examiner Name	
	Attorney Docket Number	40651-163154

CERTIFICATION STATEMENT

Please see 37 CFR 1.97 and 1.98 to make the appropriate selection(s):

☐ That each item of information contained in the information disclosure statement was first cited in any communication from a foreign patent office in a counterpart foreign application not more than three months prior to the filing of the information disclosure statement. See 37 CFR 1.97(e)(1).

OR

☐ That no item of information contained in the information disclosure statement was cited in a communication from a foreign patent office in a counterpart foreign application, and, to the knowledge of the person signing the certification after making reasonable inquiry, no item of information contained in the information disclosure statement was known to any individual designated in 37 CFR 1.56(c) more than three months prior to the filing of the information disclosure statement. See 37 CFR 1.97(e)(2).

☐ See attached certification statement.

☐ The fee set forth in 37 CFR 1.17 (p) has been submitted herewith.

☒ A certification statement is not submitted herewith.

SIGNATURE

A signature of the applicant or representative is required in accordance with CFR 1.33, 10.18. Please see CFR 1.4(d) for the form of the signature.

Signature	/James R. Foley/	Date (YYYY-MM-DD)	2014-12-16
Name/Print	James R. Foley	Registration Number	39979

This collection of information is required by 37 CFR 1.97 and 1.98. The information is required to obtain or retain a benefit by the public which is to file (and by the USPTO to process) an application. Confidentiality is governed by 35 U.S.C. 122 and 37 CFR 1.14. This collection is estimated to take 1 hour to complete, including gathering, preparing and submitting the completed application form to the USPTO. Time will vary depending upon the individual case. Any comments on the amount of time you require to complete this form and/or suggestions for reducing this burden, should be sent to the Chief Information Officer, U.S. Patent and Trademark Office, U.S. Department of Commerce, P.O. Box 1450, Alexandria, VA 22313-1450. DO NOT SEND FEES OR COMPLETED FORMS TO THIS ADDRESS. **SEND TO: Commissioner for Patents, P.O. Box 1450, Alexandria, VA 22313-1450.**

Privacy Act Statement

The Privacy Act of 1974 (P.L. 93-579) requires that you be given certain information in connection with your submission of the attached form related to a patent application or patent. Accordingly, pursuant to the requirements of the Act, please be advised that: (1) the general authority for the collection of this information is 35 U.S.C. 2(b)(2); (2) furnishing of the information solicited is voluntary; and (3) the principal purpose for which the information is used by the U.S. Patent and Trademark Office is to process and/or examine your submission related to a patent application or patent. If you do not furnish the requested information, the U.S. Patent and Trademark Office may not be able to process and/or examine your submission, which may result in termination of proceedings or abandonment of the application or expiration of the patent.

The information provided by you in this form will be subject to the following routine uses:

1. The information on this form will be treated confidentially to the extent allowed under the Freedom of Information Act (5 U.S.C. 552) and the Privacy Act (5 U.S.C. 552a). Records from this system of records may be disclosed to the Department of Justice to determine whether the Freedom of Information Act requires disclosure of these record s.

2. A record from this system of records may be disclosed, as a routine use, in the course of presenting evidence to a court, magistrate, or administrative tribunal, including disclosures to opposing counsel in the course of settlement negotiations.

3. A record in this system of records may be disclosed, as a routine use, to a Member of Congress submitting a request involving an individual, to whom the record pertains, when the individual has requested assistance from the Member with respect to the subject matter of the record.

4. A record in this system of records may be disclosed, as a routine use, to a contractor of the Agency having need for the information in order to perform a contract. Recipients of information shall be required to comply with the requirements of the Privacy Act of 1974, as amended, pursuant to 5 U.S.C. 552a(m).

5. A record related to an International Application filed under the Patent Cooperation Treaty in this system of records may be disclosed, as a routine use, to the International Bureau of the World Intellectual Property Organization, pursuant to the Patent Cooperation Treaty.

6. A record in this system of records may be disclosed, as a routine use, to another federal agency for purposes of National Security review (35 U.S.C. 181) and for review pursuant to the Atomic Energy Act (42 U.S.C. 218(c)).

7. A record from this system of records may be disclosed, as a routine use, to the Administrator, General Services, or his/her designee, during an inspection of records conducted by GSA as part of that agency's responsibility to recommend improvements in records management practices and programs, under authority of 44 U.S.C. 2904 and 2906. Such disclosure shall be made in accordance with the GSA regulations governing inspection of records for this purpose, and any other relevant (i.e., GSA or Commerce) directive. Such disclosure shall not be used to make determinations about individuals.

8. A record from this system of records may be disclosed, as a routine use, to the public after either publication of the application pursuant to 35 U.S.C. 122(b) or issuance of a patent pursuant to 35 U.S.C. 151. Further, a record may be disclosed, subject to the limitations of 37 CFR 1.14, as a routine use, to the public if the record was filed in an application which became abandoned or in which the proceedings were terminated and which application is referenced by either a published application, an application open to public inspections or an issued patent.

9. A record from this system of records may be disclosed, as a routine use, to a Federal, State, or local law enforcement agency, if the USPTO becomes aware of a violation or potential violation of law or regulation.

Electronic Acknowledgement Receipt

EFS ID:	20977603
Application Number:	14487947
International Application Number:	
Confirmation Number:	2147
Title of Invention:	FLEXIBLE MOBILE DEVICE CONNECTIVITY TO AUTOMOTIVE SYSTEMS WITH USB HUBS
First Named Inventor/Applicant Name:	Robert Voto
Customer Number:	279
Filer:	James R. Foley/Amy Lazzari
Filer Authorized By:	James R. Foley
Attorney Docket Number:	40651-163154
Receipt Date:	16-DEC-2014
Filing Date:	16-SEP-2014
Time Stamp:	15:25:02
Application Type:	Utility under 35 USC 111(a)

Payment information:

Submitted with Payment	no

File Listing:

Document Number	Document Description	File Name	File Size(Bytes)/ Message Digest	Multi Part /.zip	Pages (if appl.)
1	Information Disclosure Statement (IDS) Form (SB08)	updated_IDS_unwired.pdf	612885 0d527b5d022f56799dfff7aa379507bce70ef80e	no	5

Warnings:

Information:

2	Non Patent Literature	Al-Ani_2010.PDF	225178 e642b238a059b73e7fe2d70de3e9ca578a900f83	no	4
Warnings:					
Information:					
3	Non Patent Literature	Koch-2011.PDF	1381860 1c522571feb562d7afe0883ee2d7179285f2e9c3	no	23
Warnings:					
Information:					
4	Non Patent Literature	Ellis.PDF	515474 76030d8a554637627249578ad9da265feee6c6b7	no	2
Warnings:					
Information:					
5	Non Patent Literature	Al-Ani_2011.PDF	7754129 14a6023115daffc38ea8e1c6574d214a0cc234c5	no	147
Warnings:					
Information:					
			Total Files Size (in bytes):	10489526	

This Acknowledgement Receipt evidences receipt on the noted date by the USPTO of the indicated documents, characterized by the applicant, and including page counts, where applicable. It serves as evidence of receipt similar to a Post Card, as described in MPEP 503.

<u>New Applications Under 35 U.S.C. 111</u>
If a new application is being filed and the application includes the necessary components for a filing date (see 37 CFR 1.53(b)-(d) and MPEP 506), a Filing Receipt (37 CFR 1.54) will be issued in due course and the date shown on this Acknowledgement Receipt will establish the filing date of the application.

<u>National Stage of an International Application under 35 U.S.C. 371</u>
If a timely submission to enter the national stage of an international application is compliant with the conditions of 35 U.S.C. 371 and other applicable requirements a Form PCT/DO/EO/903 indicating acceptance of the application as a national stage submission under 35 U.S.C. 371 will be issued in addition to the Filing Receipt, in due course.

<u>New International Application Filed with the USPTO as a Receiving Office</u>
If a new international application is being filed and the international application includes the necessary components for an international filing date (see PCT Article 11 and MPEP 1810), a Notification of the International Application Number and of the International Filing Date (Form PCT/RO/105) will be issued in due course, subject to prescriptions concerning national security, and the date shown on this Acknowledgement Receipt will establish the international filing date of the application.

PTO/SB/08a (01-10)
Approved for use through 07/31/2012. OMB 0651-0031
U.S. Patent and Trademark Office; U.S. DEPARTMENT OF COMMERCE
Under the Paperwork Reduction Act of 1995, no persons are required to respond to a collection of information unless it contains a valid OMB control number.

INFORMATION DISCLOSURE STATEMENT BY APPLICANT (Not for submission under 37 CFR 1.99)		
	Application Number	14487947
	Filing Date	2014-09-16
	First Named Inventor	Robert Voto
	Art Unit	2184
	Examiner Name	Henry Tsai
	Attorney Docket Number	40651-163154

U.S.PATENTS						Remove
Examiner Initial*	Cite No	Patent Number	Kind Code[1]	Issue Date	Name of Patentee or Applicant of cited Document	Pages,Columns,Lines where Relevant Passages or Relevant Figures Appear
	1	8447890		2013-05-21	LeTourneur et al.	
	2	8447598		2013-05-21	Chutorash et al.	
	3	7478191		2009-01-13	Wurzburg et al.	
If you wish to add additional U.S. Patent citation information please click the Add button.						Add

U.S.PATENT APPLICATION PUBLICATIONS						Remove
Examiner Initial*	Cite No	Publication Number	Kind Code[1]	Publication Date	Name of Patentee or Applicant of cited Document	Pages,Columns,Lines where Relevant Passages or Relevant Figures Appear
	1	20060056401		2006-03-16	Bohm et al.	
	2	20080005262		2008-01-03	Wurzburg et al.	
If you wish to add additional U.S. Published Application citation information please click the Add button.						Add

FOREIGN PATENT DOCUMENTS								Remove
Examiner Initial*	Cite No	Foreign Document Number[3]	Country Code[2] ¡	Kind Code[4]	Publication Date	Name of Patentee or Applicant of cited Document	Pages,Columns,Lines where Relevant Passages or Relevant Figures Appear	T[5]

INFORMATION DISCLOSURE STATEMENT BY APPLICANT (Not for submission under 37 CFR 1.99)	Application Number	14487947
	Filing Date	2014-09-16
	First Named Inventor	Robert Voto
	Art Unit	2184
	Examiner Name	Henry Tsai
	Attorney Docket Number	40651-163154

	1							☐

If you wish to add additional Foreign Patent Document citation information please click the Add button Add

NON-PATENT LITERATURE DOCUMENTS Remove

Examiner Initials*	Cite No	Include name of the author (in CAPITAL LETTERS), title of the article (when appropriate), title of the item (book, magazine, journal, serial, symposium, catalog, etc), date, pages(s), volume-issue number(s), publisher, city and/or country where published.	T[5]
	1		☐

If you wish to add additional non-patent literature document citation information please click the Add button Add

EXAMINER SIGNATURE

Examiner Signature		Date Considered	

*EXAMINER: Initial if reference considered, whether or not citation is in conformance with MPEP 609. Draw line through a citation if not in conformance and not considered. Include copy of this form with next communication to applicant.

[1] See Kind Codes of USPTO Patent Documents at www.USPTO.GOV or MPEP 901.04. [2] Enter office that issued the document, by the two-letter code (WIPO Standard ST.3). [3] For Japanese patent documents, the indication of the year of the reign of the Emperor must precede the serial number of the patent document. [4] Kind of document by the appropriate symbols as indicated on the document under WIPO Standard ST.16 if possible. [5] Applicant is to place a check mark here if English language translation is attached.

INFORMATION DISCLOSURE STATEMENT BY APPLICANT (Not for submission under 37 CFR 1.99)		
	Application Number	14487947
	Filing Date	2014-09-16
	First Named Inventor	Robert Voto
	Art Unit	2184
	Examiner Name	Henry Tsai
	Attorney Docket Number	40651-163154

CERTIFICATION STATEMENT

Please see 37 CFR 1.97 and 1.98 to make the appropriate selection(s):

☐ That each item of information contained in the information disclosure statement was first cited in any communication from a foreign patent office in a counterpart foreign application not more than three months prior to the filing of the information disclosure statement. See 37 CFR 1.97(e)(1).

OR

☐ That no item of information contained in the information disclosure statement was cited in a communication from a foreign patent office in a counterpart foreign application, and, to the knowledge of the person signing the certification after making reasonable inquiry, no item of information contained in the information disclosure statement was known to any individual designated in 37 CFR 1.56(c) more than three months prior to the filing of the information disclosure statement. See 37 CFR 1.97(e)(2).

☐ See attached certification statement.

☐ The fee set forth in 37 CFR 1.17 (p) has been submitted herewith.

☒ A certification statement is not submitted herewith.

SIGNATURE

A signature of the applicant or representative is required in accordance with CFR 1.33, 10.18. Please see CFR 1.4(d) for the form of the signature.

Signature	/James R. Foley/	Date (YYYY-MM-DD)	2015-01-05
Name/Print	James R. Foley	Registration Number	39979

This collection of information is required by 37 CFR 1.97 and 1.98. The information is required to obtain or retain a benefit by the public which is to file (and by the USPTO to process) an application. Confidentiality is governed by 35 U.S.C. 122 and 37 CFR 1.14. This collection is estimated to take 1 hour to complete, including gathering, preparing and submitting the completed application form to the USPTO. Time will vary depending upon the individual case. Any comments on the amount of time you require to complete this form and/or suggestions for reducing this burden, should be sent to the Chief Information Officer, U.S. Patent and Trademark Office, U.S. Department of Commerce, P.O. Box 1450, Alexandria, VA 22313-1450. DO NOT SEND FEES OR COMPLETED FORMS TO THIS ADDRESS. **SEND TO: Commissioner for Patents, P.O. Box 1450, Alexandria, VA 22313-1450.**

Privacy Act Statement

The Privacy Act of 1974 (P.L. 93-579) requires that you be given certain information in connection with your submission of the attached form related to a patent application or patent. Accordingly, pursuant to the requirements of the Act, please be advised that: (1) the general authority for the collection of this information is 35 U.S.C. 2(b)(2); (2) furnishing of the information solicited is voluntary; and (3) the principal purpose for which the information is used by the U.S. Patent and Trademark Office is to process and/or examine your submission related to a patent application or patent. If you do not furnish the requested information, the U.S. Patent and Trademark Office may not be able to process and/or examine your submission, which may result in termination of proceedings or abandonment of the application or expiration of the patent.

The information provided by you in this form will be subject to the following routine uses:

1. The information on this form will be treated confidentially to the extent allowed under the Freedom of Information Act (5 U.S.C. 552) and the Privacy Act (5 U.S.C. 552a). Records from this system of records may be disclosed to the Department of Justice to determine whether the Freedom of Information Act requires disclosure of these record s.

2. A record from this system of records may be disclosed, as a routine use, in the course of presenting evidence to a court, magistrate, or administrative tribunal, including disclosures to opposing counsel in the course of settlement negotiations.

3. A record in this system of records may be disclosed, as a routine use, to a Member of Congress submitting a request involving an individual, to whom the record pertains, when the individual has requested assistance from the Member with respect to the subject matter of the record.

4. A record in this system of records may be disclosed, as a routine use, to a contractor of the Agency having need for the information in order to perform a contract. Recipients of information shall be required to comply with the requirements of the Privacy Act of 1974, as amended, pursuant to 5 U.S.C. 552a(m).

5. A record related to an International Application filed under the Patent Cooperation Treaty in this system of records may be disclosed, as a routine use, to the International Bureau of the World Intellectual Property Organization, pursuant to the Patent Cooperation Treaty.

6. A record in this system of records may be disclosed, as a routine use, to another federal agency for purposes of National Security review (35 U.S.C. 181) and for review pursuant to the Atomic Energy Act (42 U.S.C. 218(c)).

7. A record from this system of records may be disclosed, as a routine use, to the Administrator, General Services, or his/her designee, during an inspection of records conducted by GSA as part of that agency's responsibility to recommend improvements in records management practices and programs, under authority of 44 U.S.C. 2904 and 2906. Such disclosure shall be made in accordance with the GSA regulations governing inspection of records for this purpose, and any other relevant (i.e., GSA or Commerce) directive. Such disclosure shall not be used to make determinations about individuals.

8. A record from this system of records may be disclosed, as a routine use, to the public after either publication of the application pursuant to 35 U.S.C. 122(b) or issuance of a patent pursuant to 35 U.S.C. 151. Further, a record may be disclosed, subject to the limitations of 37 CFR 1.14, as a routine use, to the public if the record was filed in an application which became abandoned or in which the proceedings were terminated and which application is referenced by either a published application, an application open to public inspections or an issued patent.

9. A record from this system of records may be disclosed, as a routine use, to a Federal, State, or local law enforcement agency, if the USPTO becomes aware of a violation or potential violation of law or regulation.

Electronic Acknowledgement Receipt

EFS ID:	21278793
Application Number:	14487947
International Application Number:	
Confirmation Number:	2147
Title of Invention:	FLEXIBLE MOBILE DEVICE CONNECTIVITY TO AUTOMOTIVE SYSTEMS WITH USB HUBS
First Named Inventor/Applicant Name:	Robert Voto
Customer Number:	279
Filer:	James R. Foley/Amy Lazzari
Filer Authorized By:	James R. Foley
Attorney Docket Number:	40651-163154
Receipt Date:	22-JAN-2015
Filing Date:	16-SEP-2014
Time Stamp:	14:20:47
Application Type:	Utility under 35 USC 111(a)

Payment information:

Submitted with Payment	no

File Listing:

Document Number	Document Description	File Name	File Size(Bytes)/ Message Digest	Multi Part /.zip	Pages (if appl.)
1	Information Disclosure Statement (IDS) Form (SB08)	updated_IDS_unwired.pdf	612258 5a14815d08d40a34708ea921a0e539f3a2935b8e	no	4

Warnings:

Information:

Total Files Size (in bytes):	612258

This Acknowledgement Receipt evidences receipt on the noted date by the USPTO of the indicated documents, characterized by the applicant, and including page counts, where applicable. It serves as evidence of receipt similar to a Post Card, as described in MPEP 503.

New Applications Under 35 U.S.C. 111
If a new application is being filed and the application includes the necessary components for a filing date (see 37 CFR 1.53(b)-(d) and MPEP 506), a Filing Receipt (37 CFR 1.54) will be issued in due course and the date shown on this Acknowledgement Receipt will establish the filing date of the application.

National Stage of an International Application under 35 U.S.C. 371
If a timely submission to enter the national stage of an international application is compliant with the conditions of 35 U.S.C. 371 and other applicable requirements a Form PCT/DO/EO/903 indicating acceptance of the application as a national stage submission under 35 U.S.C. 371 will be issued in addition to the Filing Receipt, in due course.

New International Application Filed with the USPTO as a Receiving Office
If a new international application is being filed and the international application includes the necessary components for an international filing date (see PCT Article 11 and MPEP 1810), a Notification of the International Application Number and of the International Filing Date (Form PCT/RO/105) will be issued in due course, subject to prescriptions concerning national security, and the date shown on this Acknowledgement Receipt will establish the international filing date of the application.

UNITED STATES PATENT AND TRADEMARK OFFICE

UNITED STATES DEPARTMENT OF COMMERCE
United States Patent and Trademark Office
Address: COMMISSIONER FOR PATENTS
P.O. Box 1450
Alexandria, Virginia 22313-1450
www.uspto.gov

APPLICATION NUMBER	FILING OR 371(C) DATE	FIRST NAMED APPLICANT	ATTY. DOCKET NO./TITLE
14/487,947	09/16/2014	Robert Voto	40651-163154

CONFIRMATION NO. 2147

PUBLICATION NOTICE

OC000000074244697

279
MARIA E. KITZ
CLARK HILL PLC
150 NORTH MICHIGAN AVENUE
SUITE 2700
CHICAGO, IL 60601

Title:FLEXIBLE MOBILE DEVICE CONNECTIVITY TO AUTOMOTIVE SYSTEMS WITH USB HUBS

Publication No.US-2015-0089092-A1
Publication Date:03/26/2015

NOTICE OF PUBLICATION OF APPLICATION

The above-identified application will be electronically published as a patent application publication pursuant to 37 CFR 1.211, et seq. The patent application publication number and publication date are set forth above.

The publication may be accessed through the USPTO's publically available Searchable Databases via the Internet at www.uspto.gov. The direct link to access the publication is currently http://www.uspto.gov/patft/.

The publication process established by the Office does not provide for mailing a copy of the publication to applicant. A copy of the publication may be obtained from the Office upon payment of the appropriate fee set forth in 37 CFR 1.19(a)(1). Orders for copies of patent application publications are handled by the USPTO's Office of Public Records. The Office of Public Records can be reached by telephone at (703) 308-9726 or (800) 972-6382, by facsimile at (703) 305-8759, by mail addressed to the United States Patent and Trademark Office, Office of Public Records, Alexandria, VA 22313-1450 or via the Internet.

In addition, information on the status of the application, including the mailing date of Office actions and the dates of receipt of correspondence filed in the Office, may also be accessed via the Internet through the Patent Electronic Business Center at www.uspto.gov using the public side of the Patent Application Information and Retrieval (PAIR) system. The direct link to access this status information is currently http://pair.uspto.gov/. Prior to publication, such status information is confidential and may only be obtained by applicant using the private side of PAIR.

Further assistance in electronically accessing the publication, or about PAIR, is available by calling the Patent Electronic Business Center at 1-866-217-9197.

Office of Data Managment, Application Assistance Unit (571) 272-4000, or (571) 272-4200, or 1-888-786-0101

Microchip Ex. 1002, p. 71
Microchip v. Aptiv
IPR2024-00495

UNITED STATES PATENT AND TRADEMARK OFFICE

UNITED STATES DEPARTMENT OF COMMERCE
United States Patent and Trademark Office
Address: COMMISSIONER FOR PATENTS
P.O. Box 1450
Alexandria, Virginia 22313-1450
www.uspto.gov

APPLICATION NO.	FILING DATE	FIRST NAMED INVENTOR	ATTORNEY DOCKET NO.	CONFIRMATION NO.
14/487,947	09/16/2014	Robert Voto	40651-163154	2147

279 7590 08/19/2015
MARIA E. KITZ
CLARK HILL PLC
150 NORTH MICHIGAN AVENUE
SUITE 2700
CHICAGO, IL 60601

EXAMINER
UNELUS, ERNEST

ART UNIT	PAPER NUMBER
2181	

NOTIFICATION DATE	DELIVERY MODE
08/19/2015	ELECTRONIC

Please find below and/or attached an Office communication concerning this application or proceeding.

The time period for reply, if any, is set in the attached communication.

Notice of the Office communication was sent electronically on above-indicated "Notification Date" to the following e-mail address(es):

mkitz@clarkhill.com

PTOL-90A (Rev. 04/07)

Office Action Summary	Application No. 14/487,947	Applicant(s) VOTO ET AL.	
	Examiner ERNEST UNELUS	Art Unit 2181	AIA (First Inventor to File) Status Yes

-- The MAILING DATE of this communication appears on the cover sheet with the correspondence address --

Period for Reply

A SHORTENED STATUTORY PERIOD FOR REPLY IS SET TO EXPIRE 3 MONTHS FROM THE MAILING DATE OF THIS COMMUNICATION.

- Extensions of time may be available under the provisions of 37 CFR 1.136(a). In no event, however, may a reply be timely filed after SIX (6) MONTHS from the mailing date of this communication.
- If NO period for reply is specified above, the maximum statutory period will apply and will expire SIX (6) MONTHS from the mailing date of this communication.
- Failure to reply within the set or extended period for reply will, by statute, cause the application to become ABANDONED (35 U.S.C. § 133). Any reply received by the Office later than three months after the mailing date of this communication, even if timely filed, may reduce any earned patent term adjustment. See 37 CFR 1.704(b).

Status

1)☒ Responsive to communication(s) filed on *09/16/2014*.

☐ A declaration(s)/affidavit(s) under **37 CFR 1.130(b)** was/were filed on _____.

2a)☐ This action is **FINAL**. 2b)☒ This action is non-final.

3)☐ An election was made by the applicant in response to a restriction requirement set forth during the interview on _____; the restriction requirement and election have been incorporated into this action.

4)☐ Since this application is in condition for allowance except for formal matters, prosecution as to the merits is closed in accordance with the practice under *Ex parte Quayle*, 1935 C.D. 11, 453 O.G. 213.

Disposition of Claims*

5)☒ Claim(s) *1-22* is/are pending in the application.

5a) Of the above claim(s) _____ is/are withdrawn from consideration.

6)☐ Claim(s) _____ is/are allowed.

7)☒ Claim(s) *1-22* is/are rejected.

8)☒ Claim(s) *1 and 16* is/are objected to.

9)☐ Claim(s) _____ are subject to restriction and/or election requirement.

* If any claims have been determined allowable, you may be eligible to benefit from the **Patent Prosecution Highway** program at a participating intellectual property office for the corresponding application. For more information, please see http://www.uspto.gov/patents/init_events/pph/index.jsp or send an inquiry to PPHfeedback@uspto.gov.

Application Papers

10)☐ The specification is objected to by the Examiner.

11)☒ The drawing(s) filed on *09/16/2014* is/are: a)☒ accepted or b)☐ objected to by the Examiner.

Applicant may not request that any objection to the drawing(s) be held in abeyance. See 37 CFR 1.85(a).

Replacement drawing sheet(s) including the correction is required if the drawing(s) is objected to. See 37 CFR 1.121(d).

Priority under 35 U.S.C. § 119

12)☐ Acknowledgment is made of a claim for foreign priority under 35 U.S.C. § 119(a)-(d) or (f).

Certified copies:

a)☐ All b)☐ Some** c)☐ None of the:

1.☐ Certified copies of the priority documents have been received.

2.☐ Certified copies of the priority documents have been received in Application No. _____.

3.☐ Copies of the certified copies of the priority documents have been received in this National Stage application from the International Bureau (PCT Rule 17.2(a)).

** See the attached detailed Office action for a list of the certified copies not received.

Attachment(s)

1) ☒ Notice of References Cited (PTO-892)

2) ☒ Information Disclosure Statement(s) (PTO/SB/08a and/or PTO/SB/08b) Paper No(s)/Mail Date *12/16/2014 and 01/22/2015*.

3) ☐ Interview Summary (PTO-413) Paper No(s)/Mail Date. _____ .

4) ☐ Other: _____.

Microchip Ex. 1002, p. 73
Microchip v. Aptiv
IPR2024-00495

DETAILED ACTION

The present application, filed on or after March 16, 2013, is being examined under the first inventor to file provisions of the AIA.

The instant application having Application No. 14/487,947 has a total of 22 claims pending in the application; there's one independent claim and 21 dependent claims, all of which are ready for examination by the examiner.

INFORMATION CONCERNING OATH/DECLARATION

Oath/Declaration

The applicant's oath/declaration has been reviewed by the examiner and is found to conform to the requirements prescribed in **37 C.F.R. 1.63.**

INFORMATION CONCERNING DRAWINGS

Drawings

The applicant's drawings submitted are acceptable for examination purposes.

ACKNOWLEDGEMENT OF REFERENCES CITED BY APPLICANT

As required by **M.P.E.P. 609(C)**, the applicant's submissions of the Information Disclosure Statements December 16, 2014 and January 22, 2015 are acknowledged by the examiner and the cited references have been considered in the examination of the claims now

pending. As required by **M.P.E.P 609 C(2)**, a copy of the PTOL-1449 initialed and dated by the examiner is attached to the instant office action.

OBJECTIONS TO THE CLAIMS

Claim 1 is objected to as being indefinite for failing to particularly point out and distinctly claim the subject matter which applicant regards as the invention.

As per **claim 1**, there is not a clear separation between a preamble and a body of the claim. Also, because of the phrase, 'to enable', it seems like the claimed limitation is intended use. Correction is needed.

Claims 1 and 16 are objected to because of the following informalities:

As per **claim 1**, please provide definition for acronym USB when first mentioned, for example," Universal Serial Bus (USB)"; the same problem for acronym OTG of claim 16. Correction is needed

REJECTIONS BASED ON PRIOR ART

Claim Rejections - 35 USC § 102

In the event the determination of the status of the application as subject to AIA 35 U.S.C. 102 and 103 (or as subject to pre-AIA 35 U.S.C. 102 and 103) is incorrect, any correction of the statutory basis for the rejection will not be considered a new ground of rejection if the prior art relied upon, and the rationale supporting the rejection, would be the same under either status.

The following is a quotation of the appropriate paragraphs of 35 U.S.C. 102 that form the basis for the rejections under this section made in this Office action:

A person shall be entitled to a patent unless –

(a)(1) the claimed invention was patented, described in a printed publication, or in public use, on sale or otherwise available to the public before the effective filing date of the claimed invention.

1. **Claims 1-22** are rejected under 35 U.S.C. 102(a)(1) as being anticipated by Kellzi et al. (US pub. 2007/0156293), hereinafter, "Kellzi".

At the outset, Applicant is reminded that claims subject to examination will be given their broadest reasonable interpretation in light of the supporting disclosure. In re Morris, 127 F.3d 1048, 1054-55, 44 USPQ2d 1023,1027-28 (Fed. Cir. 1997). With this in mind, the discussion will focus on how the terms and relationships between the terms in the claims are met by the references.

2. As per **claim 1**, Kellzi discloses a system which is configured to enable a vehicle's embedded USB Host system **(interface unit 50 of fig. 1, as discloses in paragraph 0008)** to connect to consumer devices **(USB peripheral devices 80)** through a USB Hub **(USB controller 70)**, regardless of whether the consumer devices are configured to act as USB Hosts or USB Devices **(see paragraph 0008)**.

3. As per **claim 2**, Kellzi discloses "A system as recited in claim 1" **[See rejection to claim 1 above]**, wherein the system is configured to be employed between the vehicle's embedded USB Host system and at least one USB port provided in the vehicle for connection to consumer devices **(see paragraph 0008 and fig. 1)**.

4. As per **claim 3**, Kellzi discloses, wherein the system is configured to recognize and control whether the consumer device is required to be connected to each USB port as a USB Host or as a USB Device **(see paragraph 0008 and fig. 1)**.

5. As per **claim 4**, Kellzi discloses wherein the system is configured to dynamically switch the device connection between USB Device mode and USB Host mode **(see paragraph 0008 and fig. 1**).

6. As per **claim 5**, Kellzi discloses wherein the system is configured to route signals through the USB Hub to a Head Unit in a case where the consumer device is acting as a USB Device **(see paragraph 0008 and fig. 1, which teaches a USB peripheral device in communication with interface unit 50, which also equates to having a 'Head Unit'**).

7. As per **claim 6**, Kellzi discloses wherein the system is configured to route and process signals through a USB Bridge, which is connected to the USB Hub, in the case where the consumer device is acting as a USB Host, thereby rendering the consumer device compatible with the vehicle's embedded USB Host system **(see paragraph 0008 and fig. 1, which teaches a USB peripheral device in a bidirectional communication with interface unit 50, the function of a host device, which also equates to having a USB Bridge**).

8. As per **claim 7**, Kellzi discloses wherein the system comprises a USB Hub Module comprising the USB Hub, a USB Bridge, and at least one USB routing switch **(see fig. 4**).

9. As per **claim 8**, Kellzi discloses wherein the USB Hub is configured to be connected to the embedded USB Host system of the vehicle (**see paragraph 0008 and fig. 1. Note, it doesn't**

seem like this claim is further limiting the independent claim; see 112th fourth paragraph).

10. As per **claim 9**, Kellzi discloses wherein the at least one USB routing switch is configured to route each consumer port to either the USB Bridge or USB Hub **(see paragraph 0008 and fig. 1, which disclose routing data through USB controller 70, being equated to claimed USB Hub**).

11. As per **claim 10**, Kellzi discloses wherein the at least one USB routing switch comprises a plurality of USB analog multiplexing switches **(see paragraph 0013, which discloses an input signal conditioning circuitry 24-4 with multiple inputs and one output, same function of a multiplexing switch**).

12. As per **claim 11**, Kellzi discloses wherein the USB Bridge is configured to control the at least one USB routing switch **(see paragraph 0013**).

13. As per **claim 12**, Kellzi discloses wherein the USB Bridge is configured to control the at least one USB routing switch to route signals from the USB port to the USB Bridge in the case where the consumer device is acting as USB Host **(see paragraph 0008 and fig. 1, which teaches a USB peripheral device in a bidirectional communication with interface unit 50, the function of a host device, which, according to the claimed language, equates to a USB routing switch to route signals from the USB port to the USB Bridge**).

14. As per **claim 13**, Kellzi discloses wherein the USB Bridge is configured to process the signals from the consumer device and provide the signals to the USB Hub, thereby rendering the consumer device compatible with the embedded USB Host system of the vehicle **(see paragraph 0008 and fig. 1)**.

15. As per **claim 14**, Kellzi discloses wherein the USB Bridge is configured to control the at least one USB routing switch to route signals from the USB port to the USB Bridge in the case where the consumer device is acting as USB Host **(see paragraph 0008 and fig. 1, which teaches a USB peripheral device in a bidirectional communication with interface unit 50, the function of a host device, which, according to the claimed language, equates to a USB routing switch to route signals from the USB port to the USB Bridge)**.

16. As per **claim 15**, Kellzi discloses wherein the USB Bridge is configured to control the at least one USB routing switch to provide signals to the USB Hub, bypassing the USB Bridge in the case where the consumer device is acting as USB Device **(see paragraph 0008 and fig. 1, which teaches a USB peripheral device in communication with interface unit 50, the function of a USB device, which, according to the claimed language, equates to a USB routing switch to provide signals to the USB Hub, bypassing the USB Bridge)**.

17. As per **claim 16**, Kellzi discloses wherein the system comprises a USB Hub Module comprising the USB Hub and a USB Bridge which is configured to function as an OTG port **(see paragraph 0008)**.

18. As per **claim 17**, Kellzi discloses wherein the at least one USB routing switch comprises USB routing logic, and both the USB routing logic and the USB Bridge are integrated with the USB Hub in a combination USB Hub/USB Bridge Integrated Circuit (IC) **(see paragraph 0011)**.

19. As per **claim 18**, Kellzi discloses wherein the USB Bridge comprises a bridge controller as well as endpoint buffers **(see paragraph 0013 and fig. 4, which disclose non-volatile memory 24-3, functioning as buffers)**.

20. As per **claim 19**, Kellzi discloses wherein the endpoint buffers are configured to support one or more pipes of Bulk USB data connections between a Head Unit and the consumer devices **(see paragraph 0013)**.

21. As per **claim 20**, Kellzi discloses wherein the system comprises a Head Unit which is electrically connected to the USB Hub via a single USB data cable **(see fig. 1)**.

22. As per **claim 21**, Kellzi discloses wherein the system comprises a Head Unit, wherein the system is configured to support simultaneous active USB data connections between the Head Unit and multiple consumer devices, at least one of which being in host mode while the others are in device mode **(see fig. 1 and paragraph 0008)**.

23. As per **claim 22**, Kellzi discloses wherein the system comprises a Head Unit, wherein the system is configured to support simultaneous active USB data connections between the Head Unit and some combination of embedded and consumer USB devices along with at least one device being in host mode **(see fig. 1 and paragraph 0008)**.

CLOSING COMMENTS

CONCLUSION

a. STATUS OF CLAIMS IN THE APPLICATION

The following is a summary of the treatment and status of all claims in the application as recommended by **M.P.E.P. 707.07(i):**

a (1) CLAIMS REJECTED IN THE APPLICATION

Per the instant office action, claims 1-22 have received a first action on the merits and are subject of a first action non-final.

b. DIRECTION OF FUTURE CORRESPONDENCES

Any inquiry concerning this communication or earlier communications from the examiner should be directed to Ernest Unelus whose telephone number is (571) 272-8596. The examiner can normally be reached on Monday to Friday 9:00 AM to 5:00PM.

IMPORTANT NOTE

If attempts to reach the above noted Examiner by telephone are unsuccessful, the Examiner's supervisor, Mr. Idriss Alrobaye, can be reached at the following telephone number: Area Code (571) 270-1023.

The fax phone number for the organization where this application or proceeding

is assigned is 571-273-8300. Information regarding the status of an application may be obtained from the Patent Application Information Retrieval (PAIR) system. Status information for published applications may be obtained from either Private PAIR or Public PAIR. Status information for unpublished applications is available through private PAIR only. For more information about the PMR system, see her//pair-direct.uspto.gov. Should you have questions on access to the Private PAIR system, contact the Electronic Business Center (EBC) at 866-217- 91 97 (toll-free).

/Ernest Unelus/
Primary Examiner
Art Unit 2181

Notice of References Cited	Application/Control No. 14/487,947	Applicant(s)/Patent Under Reexamination VOTO ET AL.	
	Examiner ERNEST UNELUS	Art Unit 2181	Page 1 of 1

U.S. PATENT DOCUMENTS

*		Document Number Country Code-Number-Kind Code	Date MM-YYYY	Name	Classification
*	A	US-2007/0156293	07-2007	Kellzi et al.	701/001
*	B	US-2003/0167345	09-2003	Knight et al.	709/249
	C	US-			
	D	US-			
	E	US-			
	F	US-			
	G	US-			
	H	US-			
	I	US-			
	J	US-			
	K	US-			
	L	US-			
	M	US-			

FOREIGN PATENT DOCUMENTS

*		Document Number Country Code-Number-Kind Code	Date MM-YYYY	Country	Name	Classification
	N					
	O					
	P					
	Q					
	R					
	S					
	T					

NON-PATENT DOCUMENTS

*		Include as applicable: Author, Title Date, Publisher, Edition or Volume, Pertinent Pages)
	U	
	V	
	W	
	X	

*A copy of this reference is not being furnished with this Office action. (See MPEP § 707.05(a).)
Dates in MM-YYYY format are publication dates. Classifications may be US or foreign.

Microchip Ex. 1002, p. 83
Microchip v. Aptiv
IPR2024-00495

PTO/SB/08a (01-10)
Approved for use through 07/31/2012. OMB 0651-0031
U.S. Patent and Trademark Office; U.S. DEPARTMENT OF COMMERCE
Under the Paperwork Reduction Act of 1995, no persons are required to respond to a collection of information unless it contains a valid OMB control number.

INFORMATION DISCLOSURE STATEMENT BY APPLICANT (Not for submission under 37 CFR 1.99)		
	Application Number	14487947
	Filing Date	2014-09-16
	First Named Inventor	Robert Voto
	Art Unit	2184
	Examiner Name	Henry Tsai
	Attorney Docket Number	40651-163154

U.S.PATENTS						Remove
Examiner Initial*	Cite No	Patent Number	Kind Code[1]	Issue Date	Name of Patentee or Applicant of cited Document	Pages,Columns,Lines where Relevant Passages or Relevant Figures Appear
	1	8447890		2013-05-21	LeTourneur et al.	
	2	8447598		2013-05-21	Chutorash et al.	
	3	7478191		2009-01-13	Wurzburg et al.	
If you wish to add additional U.S. Patent citation information please click the Add button.						Add

U.S.PATENT APPLICATION PUBLICATIONS						Remove
Examiner Initial*	Cite No	Publication Number	Kind Code[1]	Publication Date	Name of Patentee or Applicant of cited Document	Pages,Columns,Lines where Relevant Passages or Relevant Figures Appear
	1	20060056401		2006-03-16	Bohm et al.	
	2	20080005262		2008-01-03	Wurzburg et al.	
If you wish to add additional U.S. Published Application citation information please click the Add button.						Add

FOREIGN PATENT DOCUMENTS								Remove
Examiner Initial*	Cite No	Foreign Document Number[3]	Country Code[2] ¡	Kind Code[4]	Publication Date	Name of Patentee or Applicant of cited Document	Pages,Columns,Lines where Relevant Passages or Relevant Figures Appear	T[5]

ALL REFERENCES CONSIDERED EXCEPT WHERE LINED THROUGH. /E.U./

INFORMATION DISCLOSURE STATEMENT BY APPLICANT (Not for submission under 37 CFR 1.99)	Application Number	14487947
	Filing Date	2014-09-16
	First Named Inventor	Robert Voto
	Art Unit	2184
	Examiner Name	Henry Tsai
	Attorney Docket Number	40651-163154

	1							☐

If you wish to add additional Foreign Patent Document citation information please click the Add button Add

NON-PATENT LITERATURE DOCUMENTS Remove

Examiner Initials*	Cite No	Include name of the author (in CAPITAL LETTERS), title of the article (when appropriate), title of the item (book, magazine, journal, serial, symposium, catalog, etc), date, pages(s), volume-issue number(s), publisher, city and/or country where published.	T[5]
	1		☐

If you wish to add additional non-patent literature document citation information please click the Add button Add

EXAMINER SIGNATURE

Examiner Signature	/Ernest Unelus/	Date Considered	08/12/2015

*EXAMINER: Initial if reference considered, whether or not citation is in conformance with MPEP 609. Draw line through a citation if not in conformance and not considered. Include copy of this form with next communication to applicant.

[1] See Kind Codes of USPTO Patent Documents at www.USPTO.GOV or MPEP 901.04. [2] Enter office that issued the document, by the two-letter code (WIPO Standard ST.3). [3] For Japanese patent documents, the indication of the year of the reign of the Emperor must precede the serial number of the patent document. [4] Kind of document by the appropriate symbols as indicated on the document under WIPO Standard ST.16 if possible. [5] Applicant is to place a check mark here if English language translation is attached.

ALL REFERENCES CONSIDERED EXCEPT WHERE LINED THROUGH. /E.U./

INFORMATION DISCLOSURE STATEMENT BY APPLICANT (Not for submission under 37 CFR 1.99)	Application Number	14487947
	Filing Date	2014-09-16
	First Named Inventor	Robert Voto
	Art Unit	2184
	Examiner Name	Henry Tsai
	Attorney Docket Number	40651-163154

CERTIFICATION STATEMENT

Please see 37 CFR 1.97 and 1.98 to make the appropriate selection(s):

☐ That each item of information contained in the information disclosure statement was first cited in any communication from a foreign patent office in a counterpart foreign application not more than three months prior to the filing of the information disclosure statement. See 37 CFR 1.97(e)(1).

OR

☐ That no item of information contained in the information disclosure statement was cited in a communication from a foreign patent office in a counterpart foreign application, and, to the knowledge of the person signing the certification after making reasonable inquiry, no item of information contained in the information disclosure statement was known to any individual designated in 37 CFR 1.56(c) more than three months prior to the filing of the information disclosure statement. See 37 CFR 1.97(e)(2).

☐ See attached certification statement.

☐ The fee set forth in 37 CFR 1.17 (p) has been submitted herewith.

☒ A certification statement is not submitted herewith.

SIGNATURE

A signature of the applicant or representative is required in accordance with CFR 1.33, 10.18. Please see CFR 1.4(d) for the form of the signature.

Signature	/James R. Foley/	Date (YYYY-MM-DD)	2015-01-05
Name/Print	James R. Foley	Registration Number	39979

This collection of information is required by 37 CFR 1.97 and 1.98. The information is required to obtain or retain a benefit by the public which is to file (and by the USPTO to process) an application. Confidentiality is governed by 35 U.S.C. 122 and 37 CFR 1.14. This collection is estimated to take 1 hour to complete, including gathering, preparing and submitting the completed application form to the USPTO. Time will vary depending upon the individual case. Any comments on the amount of time you require to complete this form and/or suggestions for reducing this burden, should be sent to the Chief Information Officer, U.S. Patent and Trademark Office, U.S. Department of Commerce, P.O. Box 1450, Alexandria, VA 22313-1450. DO NOT SEND FEES OR COMPLETED FORMS TO THIS ADDRESS. **SEND TO: Commissioner for Patents, P.O. Box 1450, Alexandria, VA 22313-1450.**

ALL REFERENCES CONSIDERED EXCEPT WHERE LINED THROUGH. /E.U./

Privacy Act Statement

The Privacy Act of 1974 (P.L. 93-579) requires that you be given certain information in connection with your submission of the attached form related to a patent application or patent. Accordingly, pursuant to the requirements of the Act, please be advised that: (1) the general authority for the collection of this information is 35 U.S.C. 2(b)(2); (2) furnishing of the information solicited is voluntary; and (3) the principal purpose for which the information is used by the U.S. Patent and Trademark Office is to process and/or examine your submission related to a patent application or patent. If you do not furnish the requested information, the U.S. Patent and Trademark Office may not be able to process and/or examine your submission, which may result in termination of proceedings or abandonment of the application or expiration of the patent.

The information provided by you in this form will be subject to the following routine uses:

1. The information on this form will be treated confidentially to the extent allowed under the Freedom of Information Act (5 U.S.C. 552) and the Privacy Act (5 U.S.C. 552a). Records from this system of records may be disclosed to the Department of Justice to determine whether the Freedom of Information Act requires disclosure of these record s.

2. A record from this system of records may be disclosed, as a routine use, in the course of presenting evidence to a court, magistrate, or administrative tribunal, including disclosures to opposing counsel in the course of settlement negotiations.

3. A record in this system of records may be disclosed, as a routine use, to a Member of Congress submitting a request involving an individual, to whom the record pertains, when the individual has requested assistance from the Member with respect to the subject matter of the record.

4. A record in this system of records may be disclosed, as a routine use, to a contractor of the Agency having need for the information in order to perform a contract. Recipients of information shall be required to comply with the requirements of the Privacy Act of 1974, as amended, pursuant to 5 U.S.C. 552a(m).

5. A record related to an International Application filed under the Patent Cooperation Treaty in this system of records may be disclosed, as a routine use, to the International Bureau of the World Intellectual Property Organization, pursuant to the Patent Cooperation Treaty.

6. A record in this system of records may be disclosed, as a routine use, to another federal agency for purposes of National Security review (35 U.S.C. 181) and for review pursuant to the Atomic Energy Act (42 U.S.C. 218(c)).

7. A record from this system of records may be disclosed, as a routine use, to the Administrator, General Services, or his/her designee, during an inspection of records conducted by GSA as part of that agency's responsibility to recommend improvements in records management practices and programs, under authority of 44 U.S.C. 2904 and 2906. Such disclosure shall be made in accordance with the GSA regulations governing inspection of records for this purpose, and any other relevant (i.e., GSA or Commerce) directive. Such disclosure shall not be used to make determinations about individuals.

8. A record from this system of records may be disclosed, as a routine use, to the public after either publication of the application pursuant to 35 U.S.C. 122(b) or issuance of a patent pursuant to 35 U.S.C. 151. Further, a record may be disclosed, subject to the limitations of 37 CFR 1.14, as a routine use, to the public if the record was filed in an application which became abandoned or in which the proceedings were terminated and which application is referenced by either a published application, an application open to public inspections or an issued patent.

9. A record from this system of records may be disclosed, as a routine use, to a Federal, State, or local law enforcement agency, if the USPTO becomes aware of a violation or potential violation of law or regulation.

ALL REFERENCES CONSIDERED EXCEPT WHERE LINED THROUGH. /E.U./

PTO/SB/08a (01-10)
Approved for use through 07/31/2012. OMB 0651-0031
U.S. Patent and Trademark Office; U.S. DEPARTMENT OF COMMERCE
Under the Paperwork Reduction Act of 1995, no persons are required to respond to a collection of information unless it contains a valid OMB control number.

INFORMATION DISCLOSURE STATEMENT BY APPLICANT (Not for submission under 37 CFR 1.99)		
	Application Number	14487947
	Filing Date	2014-09-16
	First Named Inventor	Robert Voto
	Art Unit	2111
	Examiner Name	
	Attorney Docket Number	40651-163154

U.S.PATENTS						Remove
Examiner Initial*	Cite No	Patent Number	Kind Code[1]	Issue Date	Name of Patentee or Applicant of cited Document	Pages,Columns,Lines where Relevant Passages or Relevant Figures Appear
	1	7130656		2006-10-31	Okagaki et al.	
	2	7280802		2007-10-09	Grady	
If you wish to add additional U.S. Patent citation information please click the Add button.						Add

U.S.PATENT APPLICATION PUBLICATIONS						Remove
Examiner Initial*	Cite No	Publication Number	Kind Code[1]	Publication Date	Name of Patentee or Applicant of cited Document	Pages,Columns,Lines where Relevant Passages or Relevant Figures Appear
	1	20100260350		2010-10-14	Chutorash et al.	
	2	20070086724		2007-04-19	Grady et al.	
	3	20090117890		2009-05-07	Jacobsen et al.	
	4	20110054721		2011-03-03	Goodrich et al.	

ALL REFERENCES CONSIDERED EXCEPT WHERE LINED THROUGH. /E.U./

INFORMATION DISCLOSURE STATEMENT BY APPLICANT (Not for submission under 37 CFR 1.99)	Application Number	14487947
	Filing Date	2014-09-16
	First Named Inventor	Robert Voto
	Art Unit	2111
	Examiner Name	
	Attorney Docket Number	40651-163154

	5	20110124300		2011-05-26	Sinai	
	6	20120134506		2012-05-31	DeBiasio et al.	
	7	20120191811		2012-07-26	Ng et al.	
	8	20120290859		2012-11-15	Saladin et al.	
	9	20130106750		2013-05-02	Kurosawa	
	10	20130053003		2013-02-28	King, II	

If you wish to add additional U.S. Published Application citation information please click the Add button. Add

FOREIGN PATENT DOCUMENTS Remove

Examiner Initial*	Cite No	Foreign Document Number[3]	Country Code[2] ¡	Kind Code[4]	Publication Date	Name of Patentee or Applicant of cited Document	Pages,Columns,Lines where Relevant Passages or Relevant Figures Appear	T[5]
	1							☐

If you wish to add additional Foreign Patent Document citation information please click the Add button Add

NON-PATENT LITERATURE DOCUMENTS Remove

Examiner Initials*	Cite No	Include name of the author (in CAPITAL LETTERS), title of the article (when appropriate), title of the item (book, magazine, journal, serial, symposium, catalog, etc), date, pages(s), volume-issue number(s), publisher, city and/or country where published.	T[5]

ALL REFERENCES CONSIDERED EXCEPT WHERE LINED THROUGH. /E.U./

INFORMATION DISCLOSURE STATEMENT BY APPLICANT (Not for submission under 37 CFR 1.99)	Application Number	14487947
	Filing Date	2014-09-16
	First Named Inventor	Robert Voto
	Art Unit	2111
	Examiner Name	
	Attorney Docket Number	40651-163154

	1	AL-ANI, TARIK et al.; Android-based In-Vehicle Infotainment System (AIVI); IS PGD 2010, October 26, 2010, Dunedin, New Zealand	☐
	2	AL-ANI, TARIK; Android In-Vehicle Infotainment System (AIVI); June, 2011, Dunedin, New Zealand	☐
	3	ELLIS, BRIAN; USB in Automotive: Not Just for PCs Anymore; Cypress Semiconductor Corp.; September 7, 2006	☐
	4	KOCH, NIELS; The Car Entertainment System; InTech; 2011	☐

If you wish to add additional non-patent literature document citation information please click the Add button Add

EXAMINER SIGNATURE

Examiner Signature	/Ernest Unelus/	Date Considered	08/12/2015

*EXAMINER: Initial if reference considered, whether or not citation is in conformance with MPEP 609. Draw line through a citation if not in conformance and not considered. Include copy of this form with next communication to applicant.

[1] See Kind Codes of USPTO Patent Documents at www.USPTO.GOV or MPEP 901.04. [2] Enter office that issued the document, by the two-letter code (WIPO Standard ST.3). [3] For Japanese patent documents, the indication of the year of the reign of the Emperor must precede the serial number of the patent document. [4] Kind of document by the appropriate symbols as indicated on the document under WIPO Standard ST.16 if possible. [5] Applicant is to place a check mark here if English language translation is attached.

ALL REFERENCES CONSIDERED EXCEPT WHERE LINED THROUGH. /E.U./

INFORMATION DISCLOSURE STATEMENT BY APPLICANT (Not for submission under 37 CFR 1.99)	Application Number	14487947
	Filing Date	2014-09-16
	First Named Inventor	Robert Voto
	Art Unit	2111
	Examiner Name	
	Attorney Docket Number	40651-163154

CERTIFICATION STATEMENT

Please see 37 CFR 1.97 and 1.98 to make the appropriate selection(s):

☐ That each item of information contained in the information disclosure statement was first cited in any communication from a foreign patent office in a counterpart foreign application not more than three months prior to the filing of the information disclosure statement. See 37 CFR 1.97(e)(1).

OR

☐ That no item of information contained in the information disclosure statement was cited in a communication from a foreign patent office in a counterpart foreign application, and, to the knowledge of the person signing the certification after making reasonable inquiry, no item of information contained in the information disclosure statement was known to any individual designated in 37 CFR 1.56(c) more than three months prior to the filing of the information disclosure statement. See 37 CFR 1.97(e)(2).

☐ See attached certification statement.

☐ The fee set forth in 37 CFR 1.17 (p) has been submitted herewith.

☒ A certification statement is not submitted herewith.

SIGNATURE

A signature of the applicant or representative is required in accordance with CFR 1.33, 10.18. Please see CFR 1.4(d) for the form of the signature.

Signature	/James R. Foley/	Date (YYYY-MM-DD)	2014-12-16
Name/Print	James R. Foley	Registration Number	39979

This collection of information is required by 37 CFR 1.97 and 1.98. The information is required to obtain or retain a benefit by the public which is to file (and by the USPTO to process) an application. Confidentiality is governed by 35 U.S.C. 122 and 37 CFR 1.14. This collection is estimated to take 1 hour to complete, including gathering, preparing and submitting the completed application form to the USPTO. Time will vary depending upon the individual case. Any comments on the amount of time you require to complete this form and/or suggestions for reducing this burden, should be sent to the Chief Information Officer, U.S. Patent and Trademark Office, U.S. Department of Commerce, P.O. Box 1450, Alexandria, VA 22313-1450. DO NOT SEND FEES OR COMPLETED FORMS TO THIS ADDRESS. **SEND TO: Commissioner for Patents, P.O. Box 1450, Alexandria, VA 22313-1450.**

ALL REFERENCES CONSIDERED EXCEPT WHERE LINED THROUGH. /E.U./

Privacy Act Statement

The Privacy Act of 1974 (P.L. 93-579) requires that you be given certain information in connection with your submission of the attached form related to a patent application or patent. Accordingly, pursuant to the requirements of the Act, please be advised that: (1) the general authority for the collection of this information is 35 U.S.C. 2(b)(2); (2) furnishing of the information solicited is voluntary; and (3) the principal purpose for which the information is used by the U.S. Patent and Trademark Office is to process and/or examine your submission related to a patent application or patent. If you do not furnish the requested information, the U.S. Patent and Trademark Office may not be able to process and/or examine your submission, which may result in termination of proceedings or abandonment of the application or expiration of the patent.

The information provided by you in this form will be subject to the following routine uses:

1. The information on this form will be treated confidentially to the extent allowed under the Freedom of Information Act (5 U.S.C. 552) and the Privacy Act (5 U.S.C. 552a). Records from this system of records may be disclosed to the Department of Justice to determine whether the Freedom of Information Act requires disclosure of these record s.

2. A record from this system of records may be disclosed, as a routine use, in the course of presenting evidence to a court, magistrate, or administrative tribunal, including disclosures to opposing counsel in the course of settlement negotiations.

3. A record in this system of records may be disclosed, as a routine use, to a Member of Congress submitting a request involving an individual, to whom the record pertains, when the individual has requested assistance from the Member with respect to the subject matter of the record.

4. A record in this system of records may be disclosed, as a routine use, to a contractor of the Agency having need for the information in order to perform a contract. Recipients of information shall be required to comply with the requirements of the Privacy Act of 1974, as amended, pursuant to 5 U.S.C. 552a(m).

5. A record related to an International Application filed under the Patent Cooperation Treaty in this system of records may be disclosed, as a routine use, to the International Bureau of the World Intellectual Property Organization, pursuant to the Patent Cooperation Treaty.

6. A record in this system of records may be disclosed, as a routine use, to another federal agency for purposes of National Security review (35 U.S.C. 181) and for review pursuant to the Atomic Energy Act (42 U.S.C. 218(c)).

7. A record from this system of records may be disclosed, as a routine use, to the Administrator, General Services, or his/her designee, during an inspection of records conducted by GSA as part of that agency's responsibility to recommend improvements in records management practices and programs, under authority of 44 U.S.C. 2904 and 2906. Such disclosure shall be made in accordance with the GSA regulations governing inspection of records for this purpose, and any other relevant (i.e., GSA or Commerce) directive. Such disclosure shall not be used to make determinations about individuals.

8. A record from this system of records may be disclosed, as a routine use, to the public after either publication of the application pursuant to 35 U.S.C. 122(b) or issuance of a patent pursuant to 35 U.S.C. 151. Further, a record may be disclosed, subject to the limitations of 37 CFR 1.14, as a routine use, to the public if the record was filed in an application which became abandoned or in which the proceedings were terminated and which application is referenced by either a published application, an application open to public inspections or an issued patent.

9. A record from this system of records may be disclosed, as a routine use, to a Federal, State, or local law enforcement agency, if the USPTO becomes aware of a violation or potential violation of law or regulation.

ALL REFERENCES CONSIDERED EXCEPT WHERE LINED THROUGH. /E.U./

Search Notes	Application/Control No.	Applicant(s)/Patent Under Reexamination
	14487947	VOTO ET AL.
	Examiner	**Art Unit**
	ERNEST UNELUS	2181

CPC- SEARCHED

Symbol	Date	Examiner
G06F 13/385, G06F 2213/3812	8/13/2015	E.U

CPC COMBINATION SETS - SEARCHED

Symbol	Date	Examiner

US CLASSIFICATION SEARCHED

Class	Subclass	Date	Examiner
710	15	8/13/2015	E.U

SEARCH NOTES

Search Notes	Date	Examiner
EAST search: US-PGPUB; USPAT; USOCR; EPO; JPO; DERWENT	8/13/2015	E.U
Inventor search utilizing eDAN and EAST	8/13/2015	E.U
Limited text search of 710/14, 15 and CPC search of G06F 13/385, G06F 2213/3812	8/13/2015	E.U

INTERFERENCE SEARCH

US Class/ CPC Symbol	US Subclass / CPC Group	Date	Examiner

Index of Claims	Application/Control No.	Applicant(s)/Patent Under Reexamination
	14487947	VOTO ET AL.
	Examiner	**Art Unit**
	ERNEST UNELUS	2181

✓	Rejected	-	Cancelled	N	Non-Elected	A	Appeal
=	Allowed	÷	Restricted	I	Interference	O	Objected

☐ Claims renumbered in the same order as presented by applicant ☐ CPA ☐ T.D. ☐ R.1.47

CLAIM		DATE								
Final	Original	08/13/2015								
	1	✓								
	2	✓								
	3	✓								
	4	✓								
	5	✓								
	6	✓								
	7	✓								
	8	✓								
	9	✓								
	10	✓								
	11	✓								
	12	✓								
	13	✓								
	14	✓								
	15	✓								
	16	✓								
	17	✓								
	18	✓								
	19	✓								
	20	✓								
	21	✓								
	22	✓								

EAST Search History

EAST Search History (Prior Art)

Ref #	Hits	Search Query	DBs	Default Operator	Plurals	Time Stamp
L1	2	"20150089092"	US-PGPUB; USPAT; USOCR; FPRS; EPO; JPO; DERWENT; IBM_TDB	OR	ON	2015/08/13 18:11
L2	4	(vehicle or automobile or car) with usb with (peripheral or device) and usb with (plurality or multiple) with (port or plug interface) and G06F13/385.cpc.	US-PGPUB; USPAT; USOCR; FPRS; EPO; JPO; DERWENT; IBM_TDB	OR	ON	2015/08/13 18:21
L3	2	(vehicle or automobile or car) with usb with (peripheral or device) and usb with (plurality or multiple) with (port or plug interface) and 710/14,15.ccls.	US-PGPUB; USPAT; USOCR; FPRS; EPO; JPO; DERWENT; IBM_TDB	OR	ON	2015/08/13 18:22
L4	3	(vehicle or automobile or car) with usb with (peripheral or device) and usb with (plurality or multiple) with (port or plug interface) and G06F2213/3812.cpc.	US-PGPUB; USPAT; USOCR; FPRS; EPO; JPO; DERWENT; IBM_TDB	OR	ON	2015/08/13 18:22
L5	12356	G06F13/385.cpc.	US-PGPUB; USPAT; USOCR; FPRS; EPO; JPO; DERWENT; IBM_TDB	OR	ON	2015/08/13 18:22
L6	1	(vehicle or automobile or car) with usb with (peripheral or device) and usb with (plurality or multiple) with (port or plug interface) and 710/15.ccls.	US-PGPUB; USPAT; USOCR; FPRS; EPO; JPO; DERWENT; IBM_TDB	OR	ON	2015/08/13 18:32
L7	2	"20070156293"	US-PGPUB; USPAT; USOCR; FPRS; EPO; JPO; DERWENT; IBM_TDB	OR	ON	2015/08/13 18:32
L8	5	(vehicle or automobile or car) with usb with (peripheral or device) and usb with (plurality or multiple) with (port or plug interface) and otg	US-PGPUB; USPAT; USOCR; FPRS; EPO; JPO; DERWENT; IBM_TDB	OR	ON	2015/08/13 18:34
L9	24	Shyambabu Yeda.in. or Robert Voto.in. or Craig Petku.in.	US-PGPUB; USPAT; USOCR;	NEAR	ON	2015/08/13 18:36

			FPRS; EPO; JPO; DERWENT; IBM_TDB			
L11	2	9 and (vehicle or automobile or car) with usb with (peripheral or device) and otg	US-PGPUB; USPAT; USOCR; FPRS; EPO; JPO; DERWENT; IBM_TDB	OR	ON	2015/08/13 18:37

8/13/2015 6:38:08 PM
C:\Users\eunelus\Documents\EAST\Workspaces\14487947.wsp

PATENT

IN THE UNITED STATES PATENT AND TRADEMARK OFFICE

Serial No.: 14/487,947	)	Conf. No.: 2147
Filing/371 Date: September 16, 2014	)	
For: FLEXIBLE MOBILE DEVICE CONNECTIVITY TO AUTOMOTIVE SYSTEMS WITH USB HUBS	)	
Inventors: Robert Voto et al.	)	
Art Unit: 2181	)	Examiner: Ernest Unelus
Attorney Ref: 43589-163154	)	

RESPONSE TO THE OFFICE ACTION DATED AUGUST 19, 2015

Commissioner For Patents
P.O. Box 1450
Alexandria, VA 22313-1450

Sir:

In the matter of the above-identified application and in response to the Office Action dated August 19, 2015, kindly enter the following amendments and consider the following remarks toward reconsideration of the present application.

Microchip Ex. 1002, p. 97
Microchip v. Aptiv
IPR2024-00495

IN THE CLAIMS:

1. (Currently amended) A system ~~which is configured to enable~~ disposed within a ~~vehicle's~~ vehicle, comprising:

an embedded Universal Serial Bus (USB) Host system;

a USB Hub interconnected to the embedded USB Host system;

a USB Bridge interconnected to the USB Hub; and

a USB routing switch interconnected to the USB Bridge, the USB Hub, and a USB Port, wherein the USB routing switch is configured to connect the USB Port to ~~consumer devices~~ the USB Hub through ~~a USB Hub, regardless of whether the consumer devices are configured to act as USB Hosts or USB Devices~~ the USB Bridge when a consumer device connected to the USB Port is acting as a USB Host, and wherein the USB routing switch is configured to connect the USB Port directly to the USB Hub when the consumer device connected to the USB Port is acting as a USB Device, thereby rendering the consumer device compatible with the embedded USB Host system.

2. (Currently amended) A system as recited in claim 1, wherein the ~~system~~ USB routing switch is configured to ~~be employed between the vehicle's~~ connect a first USB Port of a plurality of USB Ports to USB Hub through the USB Bridge when a first consumer device connected to the first USB Port is acting as a USB Host, and wherein the USB routing switch is configured to simultaneously connect a second USB Port of the plurality of USB Ports directly to the USB Hub when a second consumer device connected to the second USB Port is acting as a USB Device, thereby rendering the first and second consumer devices compatible to function simultaneously with the embedded USB Host system ~~and at least one USB port provided in the vehicle for connection to consumer devices~~.

3. (Currently amended) A system as recited in claim 1, wherein the system is configured to recognize whether the consumer device connected to the USB Port is configured to act as a USB Host or as a USB Device and control ~~whether the consumer device is required to be connected to each USB port as a USB Host or as a USB Device~~ the USB routing switch accordingly.

Microchip Ex. 1002, p. 98
Microchip v. Aptiv
IPR2024-00495

4. (Currently amended) A system as recited in claim [[1]] 7, wherein the system is configured to dynamically switch ~~the device connection~~ operation of USB Ports connected to the USB Hub Module between USB Device mode and USB Host mode.

5. (Currently amended) A system as recited in claim 1, wherein the system ~~is configured to route signals through the USB Hub to a Head Unit in a case where the consumer device is acting as a USB Device~~ further comprises an infotainment system containing the embedded USB Host system.

6. (Cancelled)

7. (Currently amended) A system as recited in claim 1, wherein the ~~system comprises a USB Hub Module comprising the~~ USB Hub, a the USB Bridge, and ~~at least one~~ the USB routing switch system are disposed within a USB Hub Module.

8. (Currently amended) A system as recited in claim 7, wherein the USB Hub ~~is configured to be~~ Module is connected to the embedded USB Host system and a plurality of USB Ports connected to ~~the embedded USB Host system of the vehicle~~ a plurality of consumer devices.

9. (Currently amended) A system as recited in claim [[7]] 8, wherein the ~~at least one~~ USB routing switch is configured to ~~route~~ connect each consumer ~~port~~ device of the plurality of consumer devices to either the USB Bridge or the USB Hub based on whether each consumer device attached to each USB Port in the plurality of USB Ports is configured to act as a USB Host or a USB Device.

10. (Currently amended) A system as recited in claim [[9]] 1, wherein the ~~at least one~~ USB routing switch comprises a plurality of USB analog multiplexing switches.

11. (Currently amended) A system as recited in claim [[7]] 1, wherein the USB Bridge is configured to control the ~~at least one~~ USB routing switch.

12. – 16. (Cancelled)

Microchip Ex. 1002, p. 99
Microchip v. Aptiv
IPR2024-00495

17. (Currently amended) A system as recited in claim [[7]] 23, wherein the ~~at least one~~ USB ~~routing switch comprises~~ Hub, the USB ~~routing logic~~ Bridge, and ~~both~~ the USB routing ~~logic and the USB Bridge~~ switch system are integrated ~~with the USB Hub in a combination USB Hub/USB Bridge~~ in an Integrated Circuit (IC).

18. (Currently amended) A system as recited in claim [[7]] 1, wherein the USB Bridge comprises a bridge controller as well as endpoint buffers.

19. (Currently amended) A system as recited in claim 18, wherein the endpoint buffers are configured to support ~~one or more pipes of Bulk~~ a USB data ~~connections~~ connection pipe between ~~a Head Unit~~ an infotainment system and the consumer ~~devices~~ device.

20. (Currently amended) A system as recited in claim 1, wherein the system further comprises ~~a Head Unit~~ an infotainment system with a single USB host which is electrically connected to the USB Hub via a single USB data ~~cable~~ connection.

21. (Currently amended) A system as recited in claim 1, wherein the system further comprises ~~a Head Unit~~ an infotainment system, wherein the system is configured to support simultaneous active USB data connections between the ~~Head Unit~~ infotainment system and multiple consumer devices, at least one of which ~~being in host mode~~ is a USB Host while ~~the~~ others are ~~in device mode~~ USB Devices.

22. (Currently amended) A system as recited in claim 1, wherein the system further comprises ~~a Head Unit~~ an infotainment system, wherein the system is configured to support simultaneous active USB data connections between the ~~Head Unit~~ infotainment system and some combination of embedded devices and consumer ~~USB~~ devices that are USB Devices along with at least one ~~device being in host mode~~ that is a USB Host.

23. (New) A system as recited in claim 1, wherein the USB routing switch comprises digital routing logic.

Microchip Ex. 1002, p. 100
Microchip v. Aptiv
IPR2024-00495

REMARKS

In response to the Office Action, Applicant has amended claims 1-5, 7-11, and 16-22 and cancelled claims 5 and 12-15. In addition, Applicant has added a new claim 23 in order to overcome the rejection of these claims.

Please consider the following remarks supporting the amendments to the claims.

Claim 1 is amended to more particularly point out that the claim is directed to a system disposed within a vehicle and to point out that this system includes an embedded Universal Serial Bus (USB) Host system, a USB Hub interconnected to the embedded USB Host system, a USB Bridge interconnected to the USB Hub, and a USB routing switch interconnected to the USB Bridge, the USB Hub, and a USB Port. The USB routing switch is configured to connect the USB Port to the USB Hub through the USB Bridge when a consumer device connected to the USB Port is acting as a USB Host. The USB routing switch is configured to connect the USB Port directly to the USB Hub when the consumer device connected to the USB Port is acting as a USB Device, thereby rendering the consumer device compatible with the embedded USB Host system. Support for these amendments may be found, *inter alia*, in Fig. 4 of the drawings and paragraph 0026-0028 of the specification.

Claim 2 is amended to more particularly point out that the USB routing switch is configured to connect a first USB Port of a plurality of USB Ports to USB Hub through the USB Bridge when a first consumer device connected to the first USB Port is acting as a USB Host. Claim 2 is also amended to more particularly point out that the USB routing switch is configured to simultaneously connect a second USB Port of the plurality of USB Ports directly to the USB Hub when a second consumer device connected to the second USB Port is acting as a USB Device, thereby rendering the first and second consumer devices compatible to function simultaneously with the embedded USB Host system. Support for these amendments may be found, *inter alia*, in Fig. 4 of the drawings and paragraph 0034 of the specification.

Claim 3 is amended to more particularly point out that the system is configured to recognize whether the consumer device connected to the USB Port is configured to act as a USB Host or as a USB Device and control the USB routing switch accordingly. Support for this amendment may be found, *inter alia*, in paragraph 0033 of the specification.

Microchip Ex. 1002, p. 101
Microchip v. Aptiv
IPR2024-00495

Claim 4 is amended to be dependent on claim 7 and to more particularly point out that the system is configured to dynamically switch operation of USB Ports connected to the USB Hub Module between USB Device mode and USB Host mode. Support for this amendment may be found, *inter alia*, in paragraph 0012 of the specification.

Claim 5 is amended to more particularly point out that the system further comprises an infotainment system containing the embedded USB Host system. Support for this amendment may be found, *inter alia*, in Fig. 3 of the drawings.

Claim 6 is cancelled because the limitations it contained were amended to claim 1.

Claim 7 is amended to more particularly point out that the USB Hub, the USB Bridge, and the USB routing switch system are disposed within a USB Hub Module. Support for this amendment may be found, *inter alia*, in Fig 4 of the drawings and paragraph 0013 of the specification.

Claim 8 is amended to more particularly point out that the USB Hub Module is connected to the embedded USB Host system and a plurality of USB Ports connected to a plurality of consumer devices. Support for this amendment may be found, *inter alia*, in Fig 4 of the drawings and paragraph 0013 of the specification.

Claim 9 is amended to be dependent on claim 8 and to more particularly point out that the USB routing switch is configured to connect each consumer device of the plurality of consumer devices to either the USB Bridge or the USB Hub based on whether each consumer device attached to each USB Port in the plurality of USB Ports is configured to act as a USB Host or a USB Device. Support for this amendment may be found, *inter alia*, in paragraph 0013 of the specification

Claims 10 and 11 is amended to be dependent on claim 1.

Claims 12-16 are cancelled without disclaimer or prejudice. Please reserve the right to present these claims in a later filed amendment or continuation application.

Claim 17 is amended to be dependent on new claim 23 and to more particularly point out that the USB Hub, the USB Bridge, and the USB routing switch system are integrated in an Integrated Circuit (IC). Support for this amendment may be found, *inter alia*, in Fig. 5 of the drawings and paragraph 0020 of the specification.

Claim 18 is amended to be dependent on claim 1.

Microchip Ex. 1002, p. 102
Microchip v. Aptiv
IPR2024-00495

Claim 19 is amended to more particularly point out that the endpoint buffers are configured to support a USB data connection pipe between an infotainment system and the consumer device. Support for this amendment may be found, *inter alia*, in paragraph 0032 of the specification.

Claim 20 is amended to more particularly point out that the system further comprises an infotainment system with a single USB host which is electrically connected to the USB Hub via a single USB data connection. Support for this amendment may be found, *inter alia*, in paragraph 0026.

Claim 21 is amended to more particularly point out that the system further comprises an infotainment system, wherein the system is configured to support simultaneous active USB data connections between the infotainment system and multiple consumer devices, at least one of which is a USB Host while others are USB Devices. Support for this amendment may be found, *inter alia*, in Fig. 5 of the drawings and paragraph 0034 of the specification.

Claim 22 is amended to more particularly point out that the system further comprises an infotainment system, wherein the system is configured to support simultaneous active USB data connections between the infotainment system and some combination of embedded devices and consumer devices that are USB Devices along with at least one that is a USB Host. Support for this amendment may be found, *inter alia*, in Fig. 5 of the drawings and paragraph 0034 of the specification.

New claim 23 is dependent on claim 1 and is added to more particularly point out that the USB routing switch comprises digital routing logic. Support for this claim may be found, *inter alia*, in paragraph 0030 of the specification.

Claim Objections

Please consider these arguments in response to the Examiner's objection to and rejection of the claims.

Claim 1 stands objected to as being indefinite because there is not a clear separation between the preamble and body of the claim. Claim 1, as amended, provides a clear separation between the preamble and the body of the claim using the transitional phrase "comprising". Claim 1 also stands objected to because the phrase "to enable" seems like the claimed limitation is intended use. Claim 1, as amended, eliminates the use of the phrase "to enable". Claim 1

Microchip Ex. 1002, p. 103
Microchip v. Aptiv
IPR2024-00495

stands objected to for failing to define an acronym on first use. Claim 1, as amended, defines the acronym USB as "Universal Serial Bus (USB)".

Claim Rejections based on pre-AIA 35 USC § 102(b)

Claims 1-5, 7-11, and 17-22 stand rejected under 35 USC § 102(a)(1) as being anticipated by Kellzi, et al. [U.S. Patent Publication No. 2007/0156293], hereinafter referred to as Kellzi.

In Item 2, Examiner points to paragraph 0008 to show that an embedded USB Host system is configured to connect to consumer devices through a USB Hub, regardless of whether the consumer devices are configured to act as USB Hosts or USB Devices.

Paragraph 0008 states that "The devices 80 may also be compliant with the USB On-the-Go (OTG) protocol, e.g. as described in the On-The-Go Supplement to the USB 2.0 Specification, Revision 1.0a, Jun. 24, 2003, and may be a OTG dual-role device, which can act as either a host to certain USB or OTG peripherals or as a peripheral to standard USB or dual-role hosts."

Following is the description of the Host Negotiation Protocol (HNP) from USB 2.0 Specification, Revision 1.0a (emphasis added):

> 6.3 HNP Overview
>
> HNP is used to transfer control of a connection from the default Host (A-device) to the default Peripheral (B-device). This is accomplished by having the A-device condition the B-device to be able to take control of the bus, and then having the A-device present an opportunity for the B-device to take control.
>
> The B-device is conditioned when the A-device sends a SetFeature(b_hnp_enable) command. After sending this command, the A-device may suspend the bus to signal the B-device that it may now take control of the bus. If the B-device wants to use the bus at that time, it signals a disconnect to the A-device. If the A-device has enabled the B-device to become Host, then the A-device will interpret this disconnect during suspend as a request from the B-device to become Host. The A-device will complete the handoff by turning on it's pull-up resistor on D+.
>
> When the B-device has finished using the bus, it starts the process of returning control to the A-device simply by stopping all bus activity and turning on its D+ pull-up resistor

Microchip Ex. 1002, p. 104
Microchip v. Aptiv
IPR2024-00495

when the bus is in FS idle. The A-device will detect this lack of activity and turn off its pull-up resistor. When the A-device detects the connection from the B-device, it will resume bus operation as Host.

6.5.1 b_hnp_enable

Setting this feature indicates to the B-device that it has been enabled to perform HNP. ***An A-device may set this feature if, and only if, the B-device is connected directly to an A-device port that supports HNP (i.e. no intervening hub between the Host and the B-device).***

The b_hnp_enable feature takes precedence over either the a_hnp_support or a_alt_hnp_support features. Thus, if b_hnp_enable is set, then HNP is enabled in the B-device, regardless of whether or not the a_hnp_support or a_alt_hnp_support bits are set.

This feature is only cleared on a bus reset or at the end of a session. It cannot be cleared with a ClearFeature(b_hnp_enable) command.

It is clear from the USB 2.0 Specification that devices compliant with the USB On-the-Go (OTG) protocol will not transfer control of a connection from the default Host (A-device) to the default Peripheral (B-device) if there is an intervening hub between the Host and the B-device. Therefore, an OTG dual-role device such as that shown by Kellzi cannot act as either a host to certain USB or OTG peripherals or as a peripheral to standard USB or dual-role hosts if there is an intervening hub between them.

In contrast to the system shown by Kellzi, Applicants' system includes an embedded Universal Serial Bus (USB) Host system. A USB Hub is interconnected to this embedded USB Host system. The system also includes a USB Bridge that is interconnected to the USB Hub. The system further includes a USB routing switch that interconnected to the USB Bridge, the USB Hub, and at least one USB Port. The USB routing switch is configured to connect the USB Port to the USB Hub through the USB Bridge when a consumer device connected to the USB Port is acting as a USB Host. The USB routing switch is configured to connect the USB Port directly to the USB Hub when the consumer device connected to the USB Port is acting as a

Microchip Ex. 1002, p. 105
Microchip v. Aptiv
IPR2024-00495

USB Device. Therefore, Applicants' system includes an intervening USB Hub between the embedded USB Host system and the consumer device.

Claim 1, as amended, is directed to a system disposed within a vehicle that includes an embedded Universal Serial Bus (USB) Host system, a USB Hub interconnected to the embedded USB Host system, a USB Bridge interconnected to the USB Hub, and a USB routing switch interconnected to the USB Bridge, the USB Hub, and a USB Port. The USB routing switch is configured to connect the USB Port to the USB Hub through the USB Bridge when a consumer device connected to the USB Port is acting as a USB Host. The USB routing switch is configured to connect the USB Port directly to the USB Hub when the consumer device connected to the USB Port is acting as a USB Device, thereby rendering the consumer device compatible with the embedded USB Host system.

As discussed above, the system shown by Kellzi cannot act as either a host to certain USB or OTG peripherals or as a peripheral to standard USB or dual-role hosts if there is an intervening hub between them. Therefore, Kellzi does not show the features of a USB Hub interconnected to the embedded USB Host system, a USB Bridge interconnected to the USB Hub, and a USB routing switch interconnected to the USB Bridge, the USB Hub, and a USB Port. The USB routing switch is configured to connect the USB Port to the USB Hub through the USB Bridge when a consumer device connected to the USB Port is acting as a USB Host. The USB routing switch is configured to connect the USB Port directly to the USB Hub when the consumer device connected to the USB Port is acting as a USB Device, thereby rendering the consumer device compatible with the embedded USB Host system as recited in claim 1.

In addition, in Item 7, the examiner points to paragraph 0008 and Fig. 1, which teaches a USB peripheral device in a bidirectional communication with interface unit 50, the function of a host device, alleging that this equates to having a USB Bridge.

As stated in paragraph 0028 of the specification, "it is envisioned that the responses to the descriptor requests made by the phone (USB Host) are either answered locally by the Bridge or preferably, the requests are forwarded through the Bridge to the Head Unit where its device drivers process the request and return the response. The descriptor responses from the device driver are conveyed to the USB Bridge, which then, in turn, passes them to the phone. By passing descriptor request to the Head Unit drivers and returning the responses from the Head

Microchip Ex. 1002, p. 106
Microchip v. Aptiv
IPR2024-00495

Unit drivers back to the consumer device, the Bridge appears as a transparent component in the USB system architecture". Applicants respectfully point out that the function of the USB Bridge described here exceeds mere bidirectional communication between a peripheral device and host.

Therefore, Applicants submit that Kellzi does not show the features of a USB Bridge that is interconnected to the USB Hub, a USB routing switch interconnected to the USB Bridge, and the USB routing switch being configured to connect the USB Port to the USB Hub through the USB Bridge when a consumer device connected to the USB Port is acting as a USB Host as recited in claim 1.

The preceding is not an exhaustive list of all of the features of claim 1 that are not shown by Kellzi. However, the examples listed here are sufficient to support an argument against anticipation of claim 1 by Kellzi.

Therefore, Applicants submit that Kellzi does not show each and every element in Applicants' claim 1 or of claims 2-5, 7-11, and 16-22 dependent thereon, therefore claims 1-5, 7-11, and 16-22 are not anticipated by Kellzi.

In addition, claim 2, which is dependent on claim 1 recites "the USB routing switch is configured to connect a first USB Port of a plurality of USB Ports to the USB Hub through the USB Bridge when a first consumer device connected to the first USB Port is acting as a USB Host, and wherein the USB routing switch is configured to simultaneously connect a second USB Port of the plurality of USB Ports directly to the USB Hub when a second consumer device connected to the second USB Port is acting as a USB Device, thereby rendering the first and second consumer devices compatible to function simultaneously with the embedded USB Host system".

As described in the On-The-Go Supplement to the USB 2.0 Specification, Revision 1.0a, "the b_hnp_enable feature takes precedence over either the a_hnp_support or a_alt_hnp_support features. Thus, if b_hnp_enable is set, then HNP is enabled in the B-device, regardless of whether or not the a_hnp_support or a_alt_hnp_support bits are set. The b_hnp_enable feature is only cleared on a bus reset or at the end of a session. It cannot be cleared with a ClearFeature(b_hnp_enable) command". Therefore, a USB OTG device cannot support simultaneous connection of the USB host to another USB host and connection of the USB Host to a USB Device. Since the system of Kellzi is implementing USB OTG, the system shown

Microchip Ex. 1002, p. 107
Microchip v. Aptiv
IPR2024-00495

cannot connect a first USB Port of a plurality of USB Ports to the USB Hub through the USB Bridge when a first consumer device connected to the first USB Port is acting as a USB Host, and simultaneously connect a second USB Port of the plurality of USB Ports directly to the USB Hub when a second consumer device connected to the second USB Port is acting as a USB Device, thereby rendering the first and second consumer devices compatible to function simultaneously with the embedded USB Host system.

Therefore, Applicants submit that Kellzi does not show each and every element in Applicants' claim 2, therefore claim 2 is not anticipated by Kellzi.

For these reasons, Applicants respectfully request that the rejection of claims 1-5, 7-11, and 16-22 under 35 USC § 102(a)(1) be reconsidered and withdrawn and that the claims be allowed.

New Claim 23

Applicants submit that claim 23 is allowable at least due to its dependence on claim 1 which is believed to be allowable.

Conclusion

Should the present claims not be deemed adequate to effectively define the patentable subject matter, the Examiner is respectfully urged to call the undersigned attorney of record to discuss the claims in an effort to reach an agreement toward allowance of the present application.

Respectfully submitted,

Date: October 27, 2015

By: _____

James R. Foley, Reg. No. 39,979
Clark Hill PLC
150 North Michigan Ave., Suite 2700
Chicago IL 60601
T. 312-985-5557
F. 312-985-5955

Microchip Ex. 1002, p. 108
Microchip v. Aptiv
IPR2024-00495

Electronic Acknowledgement Receipt

EFS ID:	23903677
Application Number:	14487947
International Application Number:	
Confirmation Number:	2147
Title of Invention:	FLEXIBLE MOBILE DEVICE CONNECTIVITY TO AUTOMOTIVE SYSTEMS WITH USB HUBS
First Named Inventor/Applicant Name:	Robert Voto
Customer Number:	279
Filer:	James R. Foley/Amy Lazzari
Filer Authorized By:	James R. Foley
Attorney Docket Number:	40651-163154
Receipt Date:	27-OCT-2015
Filing Date:	16-SEP-2014
Time Stamp:	15:02:24
Application Type:	Utility under 35 USC 111(a)

Payment information:

Submitted with Payment	no

File Listing:

Document Number	Document Description	File Name	File Size(Bytes)/ Message Digest	Multi Part /.zip	Pages (if appl.)
1		Response_Unwired.pdf	743883 e804e8135f460443bb11c1304a31ec1c09eb1099	yes	12

	Multipart Description/PDF files in .zip description		
	Document Description	**Start**	**End**
	Amendment/Req. Reconsideration-After Non-Final Reject	1	1
	Claims	2	4
	Applicant Arguments/Remarks Made in an Amendment	5	12

Warnings:	
Information:	
Total Files Size (in bytes):	743883

This Acknowledgement Receipt evidences receipt on the noted date by the USPTO of the indicated documents, characterized by the applicant, and including page counts, where applicable. It serves as evidence of receipt similar to a Post Card, as described in MPEP 503.

New Applications Under 35 U.S.C. 111
If a new application is being filed and the application includes the necessary components for a filing date (see 37 CFR 1.53(b)-(d) and MPEP 506), a Filing Receipt (37 CFR 1.54) will be issued in due course and the date shown on this Acknowledgement Receipt will establish the filing date of the application.

National Stage of an International Application under 35 U.S.C. 371
If a timely submission to enter the national stage of an international application is compliant with the conditions of 35 U.S.C. 371 and other applicable requirements a Form PCT/DO/EO/903 indicating acceptance of the application as a national stage submission under 35 U.S.C. 371 will be issued in addition to the Filing Receipt, in due course.

New International Application Filed with the USPTO as a Receiving Office
If a new international application is being filed and the international application includes the necessary components for an international filing date (see PCT Article 11 and MPEP 1810), a Notification of the International Application Number and of the International Filing Date (Form PCT/RO/105) will be issued in due course, subject to prescriptions concerning national security, and the date shown on this Acknowledgement Receipt will establish the international filing date of the application.

PTO/SB/06 (09-11)
Approved for use through 1/31/2014. OMB 0651-0032
U.S. Patent and Trademark Office; U.S. DEPARTMENT OF COMMERCE
Under the Paperwork Reduction Act of 1995, no persons are required to respond to a collection of information unless it displays a valid OMB control number.

PATENT APPLICATION FEE DETERMINATION RECORD Substitute for Form PTO-875	Application or Docket Number 14/487,947	Filing Date 09/16/2014	☐ To be Mailed

ENTITY: ☐ LARGE ☒ SMALL ☐ MICRO

APPLICATION AS FILED – PART I

FOR	(Column 1) NUMBER FILED	(Column 2) NUMBER EXTRA	RATE ($)	FEE ($)
☐ BASIC FEE (37 CFR 1.16(a), (b), or (c))	N/A	N/A	N/A	
☐ SEARCH FEE (37 CFR 1.16(k), (i), or (m))	N/A	N/A	N/A	
☐ EXAMINATION FEE (37 CFR 1.16(o), (p), or (q))	N/A	N/A	N/A	
TOTAL CLAIMS (37 CFR 1.16(i))	minus 20 =	*	X $ =	
INDEPENDENT CLAIMS (37 CFR 1.16(h))	minus 3 =	*	X $ =	
☐ APPLICATION SIZE FEE (37 CFR 1.16(s))	If the specification and drawings exceed 100 sheets of paper, the application size fee due is $310 ($155 for small entity) for each additional 50 sheets or fraction thereof. See 35 U.S.C. 41(a)(1)(G) and 37 CFR 1.16(s).			
☐ MULTIPLE DEPENDENT CLAIM PRESENT (37 CFR 1.16(j))				
* If the difference in column 1 is less than zero, enter "0" in column 2.			TOTAL	

APPLICATION AS AMENDED – PART II

AMENDMENT	10/27/2015	(Column 1) CLAIMS REMAINING AFTER AMENDMENT		(Column 2) HIGHEST NUMBER PREVIOUSLY PAID FOR	(Column 3) PRESENT EXTRA	RATE ($)	ADDITIONAL FEE ($)
	Total (37 CFR 1.16(i))	* 17	Minus	** 22	=	X $ =	
	Independent (37 CFR 1.16(h))	* 1	Minus	***3	=	X $ =	
	☐ Application Size Fee (37 CFR 1.16(s))						
	☐ FIRST PRESENTATION OF MULTIPLE DEPENDENT CLAIM (37 CFR 1.16(j))						
						TOTAL ADD'L FEE	

AMENDMENT		(Column 1) CLAIMS REMAINING AFTER AMENDMENT		(Column 2) HIGHEST NUMBER PREVIOUSLY PAID FOR	(Column 3) PRESENT EXTRA	RATE ($)	ADDITIONAL FEE ($)
	Total (37 CFR 1.16(i))	*	Minus	**	=	X $ =	
	Independent (37 CFR 1.16(h))	*	Minus	***	=	X $ =	
	☐ Application Size Fee (37 CFR 1.16(s))						
	☐ FIRST PRESENTATION OF MULTIPLE DEPENDENT CLAIM (37 CFR 1.16(j))						
						TOTAL ADD'L FEE	

* If the entry in column 1 is less than the entry in column 2, write "0" in column 3.
** If the "Highest Number Previously Paid For" IN THIS SPACE is less than 20, enter "20".
*** If the "Highest Number Previously Paid For" IN THIS SPACE is less than 3, enter "3".
The "Highest Number Previously Paid For" (Total or Independent) is the highest number found in the appropriate box in column 1.

LIE
/PEGGY 6. YARBOROUGH/

This collection of information is required by 37 CFR 1.16. The information is required to obtain or retain a benefit by the public which is to file (and by the USPTO to process) an application. Confidentiality is governed by 35 U.S.C. 122 and 37 CFR 1.14. This collection is estimated to take 12 minutes to complete, including gathering, preparing, and submitting the completed application form to the USPTO. Time will vary depending upon the individual case. Any comments on the amount of time you require to complete this form and/or suggestions for reducing this burden, should be sent to the Chief Information Officer, U.S. Patent and Trademark Office, U.S. Department of Commerce, P.O. Box 1450, Alexandria, VA 22313-1450. DO NOT SEND FEES OR COMPLETED FORMS TO THIS ADDRESS. **SEND TO: Commissioner for Patents, P.O. Box 1450, Alexandria, VA 22313-1450.**
If you need assistance in completing the form, call 1-800-PTO-9199 and select option 2.

UNITED STATES PATENT AND TRADEMARK OFFICE

UNITED STATES DEPARTMENT OF COMMERCE
United States Patent and Trademark Office
Address: COMMISSIONER FOR PATENTS
P.O. Box 1450
Alexandria, Virginia 22313-1450
www.uspto.gov

APPLICATION NO.	FILING DATE	FIRST NAMED INVENTOR	ATTORNEY DOCKET NO.	CONFIRMATION NO.
14/487,947	09/16/2014	Robert Voto	40651-163154	2147

279 7590 02/09/2016
MARIA E. KITZ
CLARK HILL PLC
150 NORTH MICHIGAN AVENUE
SUITE 2700
CHICAGO, IL 60601

EXAMINER
UNELUS, ERNEST

ART UNIT	PAPER NUMBER
2181	

NOTIFICATION DATE	DELIVERY MODE
02/09/2016	ELECTRONIC

Please find below and/or attached an Office communication concerning this application or proceeding.

The time period for reply, if any, is set in the attached communication.

Notice of the Office communication was sent electronically on above-indicated "Notification Date" to the following e-mail address(es):

mkitz@clarkhill.com

PTOL-90A (Rev. 04/07)

Office Action Summary	Application No. 14/487,947	Applicant(s) VOTO ET AL.	
	Examiner ERNEST UNELUS	Art Unit 2181	AIA (First Inventor to File) Status Yes

-- The MAILING DATE of this communication appears on the cover sheet with the correspondence address --

Period for Reply

A SHORTENED STATUTORY PERIOD FOR REPLY IS SET TO EXPIRE 3 MONTHS FROM THE MAILING DATE OF THIS COMMUNICATION.

- Extensions of time may be available under the provisions of 37 CFR 1.136(a). In no event, however, may a reply be timely filed after SIX (6) MONTHS from the mailing date of this communication.
- If NO period for reply is specified above, the maximum statutory period will apply and will expire SIX (6) MONTHS from the mailing date of this communication.
- Failure to reply within the set or extended period for reply will, by statute, cause the application to become ABANDONED (35 U.S.C. § 133). Any reply received by the Office later than three months after the mailing date of this communication, even if timely filed, may reduce any earned patent term adjustment. See 37 CFR 1.704(b).

Status

1)☒ Responsive to communication(s) filed on *10/27/2015*.

☐ A declaration(s)/affidavit(s) under **37 CFR 1.130(b)** was/were filed on _____.

2a)☒ This action is **FINAL**. 2b)☐ This action is non-final.

3)☐ An election was made by the applicant in response to a restriction requirement set forth during the interview on _____; the restriction requirement and election have been incorporated into this action.

4)☐ Since this application is in condition for allowance except for formal matters, prosecution as to the merits is closed in accordance with the practice under *Ex parte Quayle*, 1935 C.D. 11, 453 O.G. 213.

Disposition of Claims*

5)☒ Claim(s) *1-5,7-11 and 17-23* is/are pending in the application.

5a) Of the above claim(s) _____ is/are withdrawn from consideration.

6)☐ Claim(s) _____ is/are allowed.

7)☒ Claim(s) *1-5, 7-11 and 17-23* is/are rejected.

8)☐ Claim(s) _____ is/are objected to.

9)☐ Claim(s) _____ are subject to restriction and/or election requirement.

* If any claims have been determined allowable, you may be eligible to benefit from the **Patent Prosecution Highway** program at a participating intellectual property office for the corresponding application. For more information, please see http://www.uspto.gov/patents/init_events/pph/index.jsp or send an inquiry to PPHfeedback@uspto.gov.

Application Papers

10)☐ The specification is objected to by the Examiner.

11)☐ The drawing(s) filed on _____ is/are: a)☐ accepted or b)☐ objected to by the Examiner.

Applicant may not request that any objection to the drawing(s) be held in abeyance. See 37 CFR 1.85(a).

Replacement drawing sheet(s) including the correction is required if the drawing(s) is objected to. See 37 CFR 1.121(d).

Priority under 35 U.S.C. § 119

12)☐ Acknowledgment is made of a claim for foreign priority under 35 U.S.C. § 119(a)-(d) or (f).

Certified copies:

a)☐ All b)☐ Some** c)☐ None of the:

1.☐ Certified copies of the priority documents have been received.

2.☐ Certified copies of the priority documents have been received in Application No. _____.

3.☐ Copies of the certified copies of the priority documents have been received in this National Stage application from the International Bureau (PCT Rule 17.2(a)).

** See the attached detailed Office action for a list of the certified copies not received.

Attachment(s)

1) ☒ Notice of References Cited (PTO-892)

2) ☐ Information Disclosure Statement(s) (PTO/SB/08a and/or PTO/SB/08b) Paper No(s)/Mail Date _____.

3) ☐ Interview Summary (PTO-413) Paper No(s)/Mail Date. _____ .

4) ☐ Other: _____.

Microchip Ex. 1002, p. 113
Microchip v. Aptiv
IPR2024-00495

DETAILED ACTION

The present application, filed on or after March 16, 2013, is being examined under the first inventor to file provisions of the AIA.

RESPONSE TO AMENDMENT

Claim rejections based on prior art

Applicant's arguments filed 10/27/2015 with respect to claims 1-5, 7-11 and 17-23 have been fully considered and are moot in view of newly cited reference.

INFORMATION CONCERNING OATH/DECLARATION

Oath/Declaration

The applicant's oath/declaration has been reviewed by the examiner and is found to conform to the requirements prescribed in **37 C.F.R. 1.63.**

INFORMATION CONCERNING DRAWINGS

Drawings

The applicant's drawings submitted are acceptable for examination purposes.

REJECTIONS BASED ON PRIOR ART

Claim Rejections - 35 USC § 102

In the event the determination of the status of the application as subject to AIA 35 U.S.C. 102 and 103 (or as subject to pre-AIA 35 U.S.C. 102 and 103) is incorrect, any correction of the

statutory basis for the rejection will not be considered a new ground of rejection if the prior art relied upon, and the rationale supporting the rejection, would be the same under either status.

The following is a quotation of the appropriate paragraphs of 35 U.S.C. 102 that form the basis for the rejections under this section made in this Office action:

> A person shall be entitled to a patent unless –
>
> (a)(1) the claimed invention was patented, described in a printed publication, or in public use, on sale or otherwise available to the public before the effective filing date of the claimed invention.

1. **Claims 1-5, 7-9, 11 and 18-23,** are rejected under 35 U.S.C. 102(a)(1) as being anticipated by Bohm et al. (US pub. 2006/0227759), hereinafter, "Bohm".

2. As per **claim 1**, Bohm discloses a system disposed within a vehicle, comprising: an embedded Universal Serial Bus (USB) Host system **(computer system 101, as disclose in fig. 3 and paragraph 0037)**; a USB Hub **(USB switching hub 119)** interconnected to the embedded USB Host system **(see fig. 3)**; a USB Bridge **(hub controller 203)** interconnected to the USB Hub **(see fig. 3)**; and a USB routing switch **(downstream switching logic 201)** interconnected to the USB Bridge, the USB Hub, and a USB Port **(downstream port 121) (see fig. 3 and paragraph 0037)**, wherein the USB routing switch is configured to connect the USB Port to the USB Hub through the USB Bridge when a consumer device **(peripheral device 125)** connected to the USB Port is acting as a USB Host **(see paragraph 0040, which discloses peripheral device 125 to transmit data and receive data, a host function)**, and wherein the USB routing switch is configured to connect the USB Port directly to the USB Hub when the consumer device connected to the USB Port is acting as a USB Device, thereby rendering the consumer device compatible with the embedded USB Host system **(see fig. 3 and paragraph 0040)**.

3. As per **claim 2**, Bohm discloses "A system as recited in claim 1" **[See rejection to claim 1 above]**, wherein the USB routing switch is configured to connect a first USB Port of a plurality of USB Ports to USB Hub through the USB Bridge when a first consumer device connected to the first USB Port is acting as a USB Host, and wherein the USB routing switch is configured to simultaneously connect a second USB Port of the plurality of USB Ports directly to the USB Hub when a second consumer device connected to the second USB Port is acting as a USB Device, thereby rendering the first and second consumer devices compatible to function simultaneously with the embedded USB Host system **(see paragraph 0041)**.

4. As per **claim 3**, Bohm discloses wherein the system is configured to recognize whether the consumer device connected to the USB Port is configured to act as a USB Host or as a USB Device and control the USB routing switch accordingly **(see paragraph 0041)**.

5. As per **claim 4**, Bohm discloses wherein the system is configured to dynamically switch operation of USB Ports connected to the USB Hub Module between USB Device mode and USB Host mode **(see paragraph 0041)**.

6. As per **claim 5**, Bohm discloses wherein the system further comprises an infotainment system containing the embedded USB Host system **(see paragraph 0035)**.

7. As per **claim 7**, Bohm discloses wherein the USB Hub, the USB Bridge, and the USB routing switch system are disposed within a USB Hub Module **(see fig. 3)**.

8. As per **claim 8**, Bohm discloses wherein the USB Hub Module is connected to the embedded USB Host system and a plurality of USB Ports connected to a plurality of consumer devices **(see fig. 3)**.

9. As per **claim 9**, Bohm discloses wherein the USB routing switch is configured to connect each consumer device of the plurality of consumer devices to either the USB Bridge or the USB Hub based on whether each consumer device attached to each USB Port in the plurality of USB Ports is configured to act as a USB Host or a USB Device **(see paragraph 0041)**.

10. As per **claim 11**, Bohm discloses wherein the USB Bridge is configured to control the USB routing switch **(see paragraph 0041)**.

11. As per **claim 18**, Bohm discloses wherein the USB Bridge comprises a bridge controller as well as endpoint buffers **(see paragraph 0070)**.

12. As per **claim 19**, Bohm discloses wherein the endpoint buffers are configured to support a USB data connection pipe between an infotainment system and the consumer device **(see paragraph 0035)**.

13. As per **claim 20**, Bohm discloses wherein the system further comprises an infotainment system with a single USB host which is electrically connected to the USB Hub via a single USB data connection **(see fig. 3 and paragraph 0035)**.

14. As per **claim 21**, Bohm discloses wherein the system further comprises an infotainment system, wherein the system is configured to support simultaneous active USB data connections between the infotainment system and multiple consumer devices, at least one of which is a USB Host while others are USB Devices **(see paragraphs 0035 and 041)**.

15. As per **claim 22**, Bohm discloses wherein the system further comprises an infotainment system, wherein the system is configured to support simultaneous active USB data connections between the infotainment system and some combination of embedded devices and consumer devices that are USB Devices along with at least one that is a USB Host **(see fig. 17 and paragraph 0035)**.

16. As per **claim 23**, Bohm discloses wherein the USB routing switch comprises digital routing logic **(see paragraph 0068)**.

Claim Rejections - 35 USC § 103

The following is a quotation of 35 U.S.C. 103 which forms the basis for all obviousness rejections set forth in this Office action:

> A patent for a claimed invention may not be obtained, notwithstanding that the claimed invention is not identically disclosed as set forth in section 102 of this title, if the differences between the claimed invention and the prior art are such that the claimed invention as a whole would have been obvious

before the effective filing date of the claimed invention to a person having ordinary skill in the art to which the claimed invention pertains. Patentability shall not be negated by the manner in which the invention was made.

17. **Claims 10 and 17** are rejected under 35 U.S.C. 103 as being unpatentable over Bohm et al. (US pub. 2006/0227759) in view of Wright (US pat. 7,502,878).

18. As per **claim 10**, Bohm discloses "A system as recited in claim 1" **[See rejection to claim 1 above]**, but fails to expressly disclose wherein the USB routing switch comprises a plurality of USB analog multiplexing switches.

Wright discloses wherein the USB routing switch comprises a plurality of USB analog multiplexing switches **(see col. 3, lines 54-64)**.

Bohm et al. (US pub. 2006/0227759) and Wright (US pat. 7,502,878) are analogous art because they are from the same field of selecting a hub connecting a host and peripheral devices.

At the time of the invention it would have been obvious to a person of ordinary skill in the art to combine a Universal Serial Bus (USB) switching hub, as taught by Bohm, and an apparatus for switching USB devices between multiple USB hosts, as discloses by Wright.

The motivation for doing so would have been obvious because Wright teaches switching between multiple hosts and different USB devices.

Therefore, it would have been obvious to combine Wright (US pat. 7,502,878) with Bohm et al. (US pub. 2006/0227759) for the benefit of creating the system to obtain the invention as specified in claim 10.

19. As per **claim 17**, Bohm discloses "A system as recited in claim 23" **[See rejection to claim 23 above]**, but fails to expressly disclose wherein the USB Hub, the USB Bridge, and the USB routing switch system are integrated in an Integrated Circuit (IC).

Wright discloses wherein the USB Hub, the USB Bridge, and the USB routing switch system are integrated in an Integrated Circuit (IC) **(see figs. 5 and 8 and col. 8, lines 19-30)**.

Bohm et al. (US pub. 2006/0227759) and Wright (US pat. 7,502,878) are analogous art because they are from the same field of selecting a hub connecting a host and peripheral devices.

At the time of the invention it would have been obvious to a person of ordinary skill in the art to combine a Universal Serial Bus (USB) switching hub, as taught by Bohm, and an apparatus for switching USB devices between multiple USB hosts, as discloses by Wright.

The motivation for doing so would have been obvious because Wright teaches switching between multiple hosts and different USB devices.

Therefore, it would have been obvious to combine Wright (US pat. 7,502,878) with Bohm et al. (US pub. 2006/0227759) for the benefit of creating the system to obtain the invention as specified in claim 17.

CLOSING COMMENTS

Conclusion

a. STATUS OF CLAIMS IN THE APPLICATION

The following is a summary of the treatment and status of all claims in the application as recommended by **M.P.E.P. 707.07(i)**:

a(1) CLAIMS REJECTED IN THE APPLICATION

Per the instant office action, claims 1-5, 7-11 and 17-23 have received a final action on the merits.

THIS ACTION IS MADE FINAL. Applicant is reminded of the extension of time policy as set forth in 37 CFR 1.136(a).

A shortened statutory period for reply to this final action is set to expire THREE MONTHS from the mailing date of this action. In the event a first reply is filed within TWO MONTHS of the mailing date of this final action and the advisory action is not mailed until after the end of the THREE-MONTH shortened statutory period, then the shortened statutory period will expire on the date the advisory action is mailed, and any extension fee pursuant to 37 CFR 1.136(a) will be calculated from the mailing date of the advisory action. In no event, however, will the statutory period for reply expire later than SIX MONTHS from the mailing date of this final action.

b. DIRECTION OF FUTURE CORRESPONDENCES

Any inquiry concerning this communication or earlier communications from the examiner should be directed to Ernest Unelus whose telephone number is (571) 272-8596. The examiner can normally be reached on Monday to Friday 9:00 AM to 5:00 PM.

IMPORTANT NOTE

If attempts to reach the above noted Examiner by telephone is unsuccessful, the Examiner's supervisor, Mr. Idriss N. Alrobaye, can be reached at the following telephone number: Area Code (571) 272-1023.

The fax phone number for the organization where this application or proceeding is assigned is 571-273-8300. Information regarding the status of an application may be obtained

from the Patent Application Information Retrieval (PAIR) system. Status information for published applications may be obtained from either Private PAIR or Public PAIR. Status information for unpublished applications is available through Private PAIR only. For more information about the PAIR system, see http://pair-direct.uspto.gov. Should you have questions on access to the Private PAIR system, contact the Electronic Business Center (EBC) at 866-217-9197 (toll-free).

/Ernest Unelus/
Primary Examiner
Art Unit 2181

Notice of References Cited	Application/Control No. 14/487,947	Applicant(s)/Patent Under Reexamination VOTO ET AL.	
	Examiner ERNEST UNELUS	Art Unit 2181	Page 1 of 1

U.S. PATENT DOCUMENTS

*		Document Number Country Code-Number-Kind Code	Date MM-YYYY	Name	CPC Classification	US Classification
*	A	US-2006/0227759 A1	10-2006	Bohm; Mark R.	G06F13/4022	370/351
*	B	US-7,502,878 B1	03-2009	Wright; David G.	G06F13/4022	710/37
	C	US-				
	D	US-				
	E	US-				
	F	US-				
	G	US-				
	H	US-				
	I	US-				
	J	US-				
	K	US-				
	L	US-				
	M	US-				

FOREIGN PATENT DOCUMENTS

*		Document Number Country Code-Number-Kind Code	Date MM-YYYY	Country	Name	CPC Classification
	N					
	O					
	P					
	Q					
	R					
	S					
	T					

NON-PATENT DOCUMENTS

*		Include as applicable: Author, Title Date, Publisher, Edition or Volume, Pertinent Pages)
	U	
	V	
	W	
	X	

*A copy of this reference is not being furnished with this Office action. (See MPEP § 707.05(a).)
Dates in MM-YYYY format are publication dates. Classifications may be US or foreign.

Microchip Ex. 1002, p. 123
Microchip v. Aptiv
IPR2024-00495

Search Notes	Application/Control No.	Applicant(s)/Patent Under Reexamination
	14487947	VOTO ET AL.
	Examiner	**Art Unit**
	ERNEST UNELUS	2181

CPC- SEARCHED

Symbol	Date	Examiner
G06F 13/385, G06F 2213/3812	8/13/2015	E.U
G06F 13/4022	2/1/2016	E.U

CPC COMBINATION SETS - SEARCHED

Symbol	Date	Examiner

US CLASSIFICATION SEARCHED

Class	Subclass	Date	Examiner
710	15	8/13/2015	E.U

SEARCH NOTES

Search Notes	Date	Examiner
EAST search: US-PGPUB; USPAT; USOCR; EPO; JPO; DERWENT	8/13/2015	E.U
Inventor search utilizing eDAN and EAST	8/13/2015	E.U
Limited text search of 710/14, 15 and CPC search of G06F 13/385, G06F 2213/3812	8/13/2015	E.U
EAST search: US-PGPUB; USPAT; USOCR; EPO; JPO; DERWENT	2/1/2016	E.U
Inventor search utilizing eDAN and EAST	2/1/2016	E.U
CPC search of G06F 13/4022	2/1/2016	E.U

INTERFERENCE SEARCH

US Class/ CPC Symbol	US Subclass / CPC Group	Date	Examiner

EAST Search History

EAST Search History (Prior Art)

Ref #	Hits	Search Query	DBs	Default Operator	Plurals	Time Stamp
L1	8	hub with (port or plug interface) and analog with (mux or multiplex$5) and hub with ((Integrated near Circuit) or IC) and hub with controller with usb	US-PGPUB; USPAT; USOCR; FPRS; EPO; JPO; DERWENT; IBM_TDB	OR	ON	2016/02/01 22:00
L2	2	"20060227759"	US-PGPUB; USPAT; USOCR; FPRS; EPO; JPO; DERWENT; IBM_TDB	OR	OFF	2016/02/01 22:01
L3	2	(vehicle or automobile or car) with usb with (peripheral or device) and usb with (plurality or multiple) with (port or plug interface) and G06F2213/3812.cpc.	US-PGPUB; USPAT; USOCR; FPRS; EPO; JPO; DERWENT; IBM_TDB	OR	ON	2016/02/01 22:01
L4	13698	G06F13/385.cpc.	US-PGPUB; USPAT; USOCR; FPRS; EPO; JPO; DERWENT; IBM_TDB	OR	ON	2016/02/01 22:01
L5	29	usb with (peripheral or device) and usb with (plurality or multiple or second or another) near (port or plug interface) with hub and switch$4 with (port or plug interface) and (simultaneously or concurrently) with (port or plug interface)	US-PGPUB; USPAT; USOCR; FPRS; EPO; JPO; DERWENT; IBM_TDB	OR	ON	2016/02/01 22:02
L6	68	usb with (peripheral or device) and usb with (plurality or multiple) with (port or plug interface) with hub and switch$4 with (port or plug interface) and (simultaneously or concurrently) with (port or plug interface)	US-PGPUB; USPAT; USOCR; FPRS; EPO; JPO; DERWENT; IBM_TDB	OR	ON	2016/02/01 22:02
L7	29	usb with (peripheral or device) and usb with (plurality or multiple or second or another) near (port or plug interface) with hub and switch$4 with (port or plug interface) and (simultaneously or concurrently) with (port or plug interface)	US-PGPUB; USPAT; USOCR; FPRS; EPO; JPO; DERWENT; IBM_TDB	OR	ON	2016/02/01 22:02
L8	25	Shyambabu Yeda.in. or Robert Voto.in.	US-PGPUB;	NEAR	ON	2016/02/01

		or Craig Petku.in.	USPAT; USOCR; FPRS; EPO; JPO; DERWENT; IBM_TDB			22:02
L9	2	8 and (vehicle or automobile or car) with usb with (peripheral or device) and otg	US-PGPUB; USPAT; USOCR; FPRS; EPO; JPO; DERWENT; IBM_TDB	OR	ON	2016/02/01 22:02
L10	6967	G06F13/4022.cpc.	US-PGPUB; USPAT; USOCR; FPRS; EPO; JPO; DERWENT; IBM_TDB	OR	ON	2016/02/01 22:06
L11	149	usb with hub and switch$4 with (port or plug interface) and G06F13/4022.cpc.	US-PGPUB; USPAT; USOCR; FPRS; EPO; JPO; DERWENT; IBM_TDB	OR	ON	2016/02/01 22:07
L12	74	usb with (host or computer) with hub and switch$4 with (port or plug interface) with device and G06F13/4022.cpc.	US-PGPUB; USPAT; USOCR; FPRS; EPO; JPO; DERWENT; IBM_TDB	OR	ON	2016/02/01 22:07

2/1/2016 10:08:29 PM
C:\Users\eunelus\Documents\EAST\Workspaces\14487947.wsp

Index of Claims	Application/Control No.	Applicant(s)/Patent Under Reexamination
	14487947	VOTO ET AL.
	Examiner	**Art Unit**
	ERNEST UNELUS	2181

✓	Rejected	-	Cancelled	N	Non-Elected	A	Appeal
=	Allowed	÷	Restricted	I	Interference	O	Objected

☐ Claims renumbered in the same order as presented by applicant ☐ CPA ☐ T.D. ☐ R.1.47

CLAIM		DATE								
Final	Original	08/13/2015	02/01/2016							
	1	✓	✓							
	2	✓	✓							
	3	✓	✓							
	4	✓	✓							
	5	✓	✓							
	6	✓	-							
	7	✓	✓							
	8	✓	✓							
	9	✓	✓							
	10	✓	✓							
	11	✓	✓							
	12	✓	-							
	13	✓	-							
	14	✓	-							
	15	✓	-							
	16	✓	-							
	17	✓	✓							
	18	✓	✓							
	19	✓	✓							
	20	✓	✓							
	21	✓	✓							
	22	✓	✓							
	23		✓							

Microchip Ex. 1002, p. 127
Microchip v. Aptiv
IPR2024-00495

IN THE UNITED STATES PATENT AND TRADEMARK OFFICE

Appl. No.	:	14/487,947	Confirmation No. 2147
Applicant	:	Unwired Technology LLC	
Inventors	:	Robert Voto, et al.	
Filed	:	09/16/2014	
TC/AU	:	2181	
Examiner	:	Ernest Unelus	
Docket No.	:	DP-322037 (formerly 40651-163154)	
Title	:	Flexible Mobile Device Connectivity to Automotive Systems with USB Hubs	

RESPONSE UNDER 37 CFR § 1.116

Dear Examiner Unelus:

This paper is in response to the final office action mailed on February 9, 2016 for the above referenced application. Please consider the remarks and arguments presented herein.

I.	Listing of the Claims	Page 2
II.	Remarks and Arguments	Page 5
III.	Conclusion	Page 8

AMENDMENTS TO THE CLAIMS

A listing of the pending claims is presented here for the Examiner's convenience.

1. (Previously presented) A system disposed within a vehicle, comprising:

an embedded Universal Serial Bus (USB) Host system;

a USB Hub interconnected to the embedded USB Host system;

a USB Bridge interconnected to the USB Hub; and

a USB routing switch interconnected to the USB Bridge, the USB Hub, and a USB Port, wherein the USB routing switch is configured to connect the USB Port to the USB Hub through the USB Bridge when a consumer device connected to the USB Port is acting as a USB Host, and wherein the USB routing switch is configured to connect the USB Port directly to the USB Hub when the consumer device connected to the USB Port is acting as a USB Device, thereby rendering the consumer device compatible with the embedded USB Host system.

2. (Previously presented) A system as recited in claim 1, wherein the USB routing switch is configured to connect a first USB Port of a plurality of USB Ports to the USB Hub through the USB Bridge when a first consumer device connected to the first USB Port is acting as a USB Host, and wherein the USB routing switch is configured to simultaneously connect a second USB Port of the plurality of USB Ports directly to the USB Hub when a second consumer device connected to the second USB Port is acting as a USB Device, thereby rendering the first and second consumer devices compatible to function simultaneously with the embedded USB Host system.

3. (Previously presented) A system as recited in claim 1, wherein the system is configured to recognize whether the consumer device connected to the USB Port is configured to act as a USB Host or as a USB Device and control the USB routing switch accordingly.

4. (Previously presented) A system as recited in claim 7, wherein the system is configured to dynamically switch operation of USB Ports connected to the USB Hub Module between USB Device mode and USB Host mode.

Microchip Ex. 1002, p. 129
Microchip v. Aptiv
IPR2024-00495

5. (Previously presented) A system as recited in claim 1, wherein the system further comprises an infotainment system containing the embedded USB Host system.

6. (Cancelled)

7. (Previously presented) A system as recited in claim 1, wherein the USB Hub, the USB Bridge, and the USB routing switch system are disposed within a USB Hub Module.

8. (Previously presented) A system as recited in claim 7, wherein the USB Hub Module is connected to the embedded USB Host system and a plurality of USB Ports connected to a plurality of consumer devices.

9. (Previously presented) A system as recited in claim 8, wherein the USB routing switch is configured to connect each consumer device of the plurality of consumer devices to either the USB Bridge or the USB Hub based on whether each consumer device attached to each USB Port in the plurality of USB Ports is configured to act as a USB Host or a USB Device.

10. (Previously presented) A system as recited in claim 1, wherein the USB routing switch comprises a plurality of USB analog multiplexing switches.

11. (Previously presented) A system as recited in claim 1, wherein the USB Bridge is configured to control the USB routing switch.

12. – 16. (Cancelled)

17. (Previously presented) A system as recited in claim 23, wherein the USB Hub, the USB Bridge, and the USB routing switch system are integrated in an Integrated Circuit (IC).

18. (Previously presented) A system as recited in claim 1, wherein the USB Bridge comprises a bridge controller as well as endpoint buffers.

19. (Previously presented) A system as recited in claim 18, wherein the endpoint buffers are configured to support a USB data connection pipe between an infotainment system and the consumer device.

Microchip Ex. 1002, p. 130
Microchip v. Aptiv
IPR2024-00495

20. (Previously presented) A system as recited in claim 1, wherein the system further comprises an infotainment system with a single USB host which is electrically connected to the USB Hub via a single USB data connection.

21. (Previously presented) A system as recited in claim 1, wherein the system further comprises an infotainment system, wherein the system is configured to support simultaneous active USB data connections between the infotainment system and multiple consumer devices, at least one of which is a USB Host while others are USB Devices.

22. (Previously presented) A system as recited in claim 1, wherein the system further comprises an infotainment system, wherein the system is configured to support simultaneous active USB data connections between the infotainment system and some combination of embedded devices and consumer devices that are USB Devices along with at least one that is a USB Host.

23. (Previously presented) A system as recited in claim 1, wherein the USB routing switch comprises digital routing logic.

Microchip Ex. 1002, p. 131
Microchip v. Aptiv
IPR2024-00495

REMARKS AND ARGUMENTS

Claim Rejections based on 35 USC § 102(a)(1)

Claims 1-5, 7-9, and 18-23 stand rejected under 35 USC § 102(a)(1) as being anticipated by Bohm, et al. [U.S. Patent Publication No. 2006/0227759], hereinafter referred to as Bohm.

Pending claim 1is directed to a system disposed within a vehicle that includes an embedded Universal Serial Bus (USB) Host system, a USB Hub interconnected to the embedded USB Host system, a USB Bridge interconnected to the USB Hub, and a USB routing switch interconnected to the USB Bridge, the USB Hub, and a USB Port. The USB routing switch is configured to connect the USB Port to the USB Hub through the USB Bridge when a consumer device connected to the USB Port is acting as a USB Host. The USB routing switch is configured to connect the USB Port directly to the USB Hub when the consumer device connected to the USB Port is acting as a USB Device, thereby rendering the consumer device compatible with the embedded USB Host system.

In Item 2, of the instant office action, Examiner asserts that Fig. 3 and paragraphs 0037 and 0040 of Bohm disclose all of the features of pending claim 1.

Particularly, Examiner asserts that the USB Hub interconnected to the USB Host system is shown by the USB switching hub 119 of Bohm and the USB Bridge interconnected to the USB Hub is shown by hub controller 203 of Bohm. Examiner also asserts that the USB routing switch is shown by the downstream switching logic 201 of Bohm.

Applicant respectfully points out the hub controller 203 and the downstream switching logic 201 are components of the USB switching hub 119, rather than a separate elements. Applicant submits that it not logical that the hub controller 203 and downstream switching logic 201 can be components of the USB switching hub 119 that are contained within USB switching hub 119 and at the very same time be interconnected to the same USB switching hub 119.

Applicant submits that the elements of Bohn have been improperly characterized in the rejection of claim 1. A person of ordinary skill in the art would recognize that a USB hub is used

Microchip Ex. 1002, p. 132
Microchip v. Aptiv
IPR2024-00495

to connect a USB Host system to one or more USB peripheral devices, as is shown in Fig. 3, and that the hub controller 203 and downstream switching logic 201 are typical components of such a USB hub. This person of ordinary skill in the art would not recognize that a USB bridge that is used to connect one USB host system to another USB host system is equivalent to a hub controller that is a component of a USB hub configured to interconnect a USB Host system to one or more USB peripheral devices. The person of ordinary skill in the art would also not recognize that a USB routing switch is equivalent to the downstream switching logic this is a component of a USB hub as described by Bohm. Therefore, Applicant submits that a person of ordinary skill in the art would not conclude that Bohm shows a USB Bridge interconnected to the USB Hub or a USB routing switch interconnected to the USB Bridge and the USB Hub as recited in Applicant's pending claim 1.

Consequently, Applicant submits that Bohm does not show the features of a USB Bridge that is interconnected to a USB Hub, a USB routing switch interconnected to the USB Bridge, and the USB routing switch being configured to connect the USB Port to the USB Hub through the USB Bridge when a consumer device connected to the USB Port is acting as a USB Host as recited in claim 1.

In Item 3 of the instant office action, Examiner asserts that paragraph 0041 of Bohm discloses the additionally claimed features of pending claim 2. Paragraph 0041 of Bohm states that the USB host 100 and the dual role peripheral device 207 acting as a USB host may communicate separately with different downstream devices 125a and 125b simultaneously through a first and second hub of the USB switching hub 119.

However, Bohm does not disclose that the USB host 100 may be connected directly to the dual role peripheral device 207 while acting as a USB host (first consumer device connected to the first USB Port acting as a USB Host) while simultaneously being connected to the downstream device 125a or 125b (second consumer device connected to the second USB Port acting as a USB Device).

Microchip Ex. 1002, p. 133
Microchip v. Aptiv
IPR2024-00495

Thus, Bohm does not show the features of the USB routing switch being configured to connect a first USB Port of a plurality of USB Ports to the USB Hub through the USB Bridge when a first consumer device connected to the first USB Port is acting as a USB Host, and wherein the USB routing switch is configured to simultaneously connect a second USB Port of the plurality of USB Ports directly to the USB Hub when a second consumer device connected to the second USB Port is acting as a USB Device, thereby rendering the first and second consumer devices compatible to function simultaneously with the embedded USB Host system as recited in pending claim 2.

Therefore, Applicant submits that Bohm does not show each and every element in Applicant's claim 1 or of claims 2-5, 7-9, and 18-23 dependent thereon, and so claims 1-5, 7-9, and 18-23 are not anticipated by Bohm and a rejection of these claims under 35 USC § 102(a)(1) is not proper. Applicant respectfully requests that the rejection of claims 1-5, 7-9, and 18-23 under 35 USC § 102(a)(1) be reconsidered and withdrawn and that the claims be allowed.

Claim Rejections based on 35 USC § 103(a)

Claims 10 and 17 stand rejected under 35 USC §103(a) as being unpatentable over Bohm in view of Wright [U.S. Patent No. 7,502,878].

Though dependent claims 10 and 17 each contains their own allowable subject matter, these claims are allowable at least due to their dependence on claim 1 which is believed to be in condition for allowance.

Microchip Ex. 1002, p. 134
Microchip v. Aptiv
IPR2024-00495

CONCLUSION

It is believed that only allowable claims remain in the application. Applicant respectfully requests that a timely Notice of Allowance be issued in this case.

If it would further prosecution of the application, the Examiner is urged to contact the undersigned at the phone number provided.

The Commissioner is hereby authorized to charge any fees associated with this communication and/or credit any overpayments to Delphi Technologies, Inc., Deposit Account No. 50-0831.

Respectfully submitted,

/Robert J. Myers/

Robert J. Myers
Reg. No. 69,783
Delphi Technologies, Inc.
Legal Staff – M/C 483-400-402
P.O. Box 5052
Troy, Michigan 48007-5052
(248) 813-2512
bob.myers@delphi.com

Microchip Ex. 1002, p. 135
Microchip v. Aptiv
IPR2024-00495

Electronic Acknowledgement Receipt

EFS ID:	25450387
Application Number:	14487947
International Application Number:	
Confirmation Number:	2147
Title of Invention:	FLEXIBLE MOBILE DEVICE CONNECTIVITY TO AUTOMOTIVE SYSTEMS WITH USB HUBS
First Named Inventor/Applicant Name:	Robert Voto
Customer Number:	279
Filer:	Robert James Myers/Kandace Powell
Filer Authorized By:	Robert James Myers
Attorney Docket Number:	40651-163154
Receipt Date:	11-APR-2016
Filing Date:	16-SEP-2014
Time Stamp:	12:46:27
Application Type:	Utility under 35 USC 111(a)

Payment information:

Submitted with Payment	no

File Listing:

Document Number	Document Description	File Name	File Size(Bytes)/ Message Digest	Multi Part /.zip	Pages (if appl.)
1	Response After Final Action	DP322037_FOA_Reply_09FE16.pdf	45130 6ce42656af531d6ff5e694e60fb3f4ddb7e8ac08	no	8

Warnings:

Information:

Total Files Size (in bytes):	45130

This Acknowledgement Receipt evidences receipt on the noted date by the USPTO of the indicated documents, characterized by the applicant, and including page counts, where applicable. It serves as evidence of receipt similar to a Post Card, as described in MPEP 503.

New Applications Under 35 U.S.C. 111
If a new application is being filed and the application includes the necessary components for a filing date (see 37 CFR 1.53(b)-(d) and MPEP 506), a Filing Receipt (37 CFR 1.54) will be issued in due course and the date shown on this Acknowledgement Receipt will establish the filing date of the application.

National Stage of an International Application under 35 U.S.C. 371
If a timely submission to enter the national stage of an international application is compliant with the conditions of 35 U.S.C. 371 and other applicable requirements a Form PCT/DO/EO/903 indicating acceptance of the application as a national stage submission under 35 U.S.C. 371 will be issued in addition to the Filing Receipt, in due course.

New International Application Filed with the USPTO as a Receiving Office
If a new international application is being filed and the international application includes the necessary components for an international filing date (see PCT Article 11 and MPEP 1810), a Notification of the International Application Number and of the International Filing Date (Form PCT/RO/105) will be issued in due course, subject to prescriptions concerning national security, and the date shown on this Acknowledgement Receipt will establish the international filing date of the application.

PTO/SB/06 (09-11)
Approved for use through 1/31/2014. OMB 0651-0032
U.S. Patent and Trademark Office; U.S. DEPARTMENT OF COMMERCE
Under the Paperwork Reduction Act of 1995, no persons are required to respond to a collection of information unless it displays a valid OMB control number.

PATENT APPLICATION FEE DETERMINATION RECORD Substitute for Form PTO-875	Application or Docket Number 14/487,947	Filing Date 09/16/2014	☐ To be Mailed

ENTITY: ☐ LARGE ☒ SMALL ☐ MICRO

APPLICATION AS FILED – PART I

FOR	(Column 1) NUMBER FILED	(Column 2) NUMBER EXTRA	RATE ($)	FEE ($)
☐ BASIC FEE (37 CFR 1.16(a), (b), or (c))	N/A	N/A	N/A	
☐ SEARCH FEE (37 CFR 1.16(k), (i), or (m))	N/A	N/A	N/A	
☐ EXAMINATION FEE (37 CFR 1.16(o), (p), or (q))	N/A	N/A	N/A	
TOTAL CLAIMS (37 CFR 1.16(i))	minus 20 =	*	X $ =	
INDEPENDENT CLAIMS (37 CFR 1.16(h))	minus 3 =	*	X $ =	
☐ APPLICATION SIZE FEE (37 CFR 1.16(s))	If the specification and drawings exceed 100 sheets of paper, the application size fee due is $310 ($155 for small entity) for each additional 50 sheets or fraction thereof. See 35 U.S.C. 41(a)(1)(G) and 37 CFR 1.16(s).			
☐ MULTIPLE DEPENDENT CLAIM PRESENT (37 CFR 1.16(j))				
* If the difference in column 1 is less than zero, enter "0" in column 2.			TOTAL	

APPLICATION AS AMENDED – PART II

AMENDMENT

04/11/2016	(Column 1) CLAIMS REMAINING AFTER AMENDMENT		(Column 2) HIGHEST NUMBER PREVIOUSLY PAID FOR	(Column 3) PRESENT EXTRA	RATE ($)	ADDITIONAL FEE ($)
Total (37 CFR 1.16(i))	* 17	Minus	** 22	=	X $ =	
Independent (37 CFR 1.16(h))	* 1	Minus	***3	=	X $ =	
☐ Application Size Fee (37 CFR 1.16(s))						
☐ FIRST PRESENTATION OF MULTIPLE DEPENDENT CLAIM (37 CFR 1.16(j))						
					TOTAL ADD'L FEE	

AMENDMENT

	(Column 1) CLAIMS REMAINING AFTER AMENDMENT		(Column 2) HIGHEST NUMBER PREVIOUSLY PAID FOR	(Column 3) PRESENT EXTRA	RATE ($)	ADDITIONAL FEE ($)
Total (37 CFR 1.16(i))	*	Minus	**	=	X $ =	
Independent (37 CFR 1.16(h))	*	Minus	***	=	X $ =	
☐ Application Size Fee (37 CFR 1.16(s))						
☐ FIRST PRESENTATION OF MULTIPLE DEPENDENT CLAIM (37 CFR 1.16(j))						
					TOTAL ADD'L FEE	

* If the entry in column 1 is less than the entry in column 2, write "0" in column 3.
** If the "Highest Number Previously Paid For" IN THIS SPACE is less than 20, enter "20".
*** If the "Highest Number Previously Paid For" IN THIS SPACE is less than 3, enter "3".
The "Highest Number Previously Paid For" (Total or Independent) is the highest number found in the appropriate box in column 1.

LIE
/ELMIRA Y. HALL/

This collection of information is required by 37 CFR 1.16. The information is required to obtain or retain a benefit by the public which is to file (and by the USPTO to process) an application. Confidentiality is governed by 35 U.S.C. 122 and 37 CFR 1.14. This collection is estimated to take 12 minutes to complete, including gathering, preparing, and submitting the completed application form to the USPTO. Time will vary depending upon the individual case. Any comments on the amount of time you require to complete this form and/or suggestions for reducing this burden, should be sent to the Chief Information Officer, U.S. Patent and Trademark Office, U.S. Department of Commerce, P.O. Box 1450, Alexandria, VA 22313-1450. DO NOT SEND FEES OR COMPLETED FORMS TO THIS ADDRESS. **SEND TO: Commissioner for Patents, P.O. Box 1450, Alexandria, VA 22313-1450.**
If you need assistance in completing the form, call 1-800-PTO-9199 and select option 2.

UNITED STATES PATENT AND TRADEMARK OFFICE

UNITED STATES DEPARTMENT OF COMMERCE
United States Patent and Trademark Office
Address: COMMISSIONER FOR PATENTS
P.O. Box 1450
Alexandria, Virginia 22313-1450
www.uspto.gov

APPLICATION NO.	FILING DATE	FIRST NAMED INVENTOR	ATTORNEY DOCKET NO.	CONFIRMATION NO.
14/487,947	09/16/2014	Robert Voto	40651-163154	2147

279 7590 05/16/2016
MARIA E. KITZ
CLARK HILL PLC
150 NORTH MICHIGAN AVENUE
SUITE 2700
CHICAGO, IL 60601

EXAMINER
UNELUS, ERNEST

ART UNIT	PAPER NUMBER
2181	

NOTIFICATION DATE	DELIVERY MODE
05/16/2016	ELECTRONIC

Please find below and/or attached an Office communication concerning this application or proceeding.

The time period for reply, if any, is set in the attached communication.

Notice of the Office communication was sent electronically on above-indicated "Notification Date" to the following e-mail address(es):

mkitz@clarkhill.com

PTOL-90A (Rev. 04/07)

Advisory Action Before the Filing of an Appeal Brief	**Application No.** 14/487,947	**Applicant(s)** VOTO ET AL.	
	Examiner ERNEST UNELUS	**Art Unit** 2181	**AIA (First Inventor to File) Status** Yes

--The MAILING DATE of this communication appears on the cover sheet with the correspondence address --

THE REPLY FILED 11 April 2016 FAILS TO PLACE THIS APPLICATION IN CONDITION FOR ALLOWANCE.

NO NOTICE OF APPEAL FILED

1. ☒ The reply was filed after a final rejection. No Notice of Appeal has been filed. To avoid abandonment of this application, applicant must timely file one of the following replies: (1) an amendment, affidavit, or other evidence, which places the application in condition for allowance; (2) a Notice of Appeal (with appeal fee) in compliance with 37 CFR 41.31; or (3) a Request for Continued Examination (RCE) in compliance with 37 CFR 1.114 if this is a utility or plant application. Note that RCEs are not permitted in design applications. The reply must be filed within one of the following time periods:
   a) ☐ The period for reply expires _____months from the mailing date of the final rejection.
   b) ☒ The period for reply expires on: (1) the mailing date of this Advisory Action; or (2) the date set forth in the final rejection, whichever is later. In no event, however, will the statutory period for reply expire later than SIX MONTHS from the mailing date of the final rejection.
   c) ☐ A prior Advisory Action was mailed more than 3 months after the mailing date of the final rejection in response to a first after-final reply filed within 2 months of the mailing date of the final rejection. The current period for reply expires months from the mailing date of *the prior Advisory Action* or SIX MONTHS from the mailing date of the final rejection, whichever is earlier.
   Examiner Note: If box 1 is checked, check either box (a), (b) or (c). ONLY CHECK BOX (b) WHEN THIS ADVISORY ACTION IS THE FIRST RESPONSE TO APPLICANT'S FIRST AFTER-FINAL REPLY WHICH WAS FILED WITHIN TWO MONTHS OF THE FINAL REJECTION. ONLY CHECK BOX (c) IN THE LIMITED SITUATION SET FORTH UNDER BOX (c). See MPEP 706.07(f).

Extensions of time may be obtained under 37 CFR 1.136(a). The date on which the petition under 37 CFR 1.136(a) and the appropriate extension fee have been filed is the date for purposes of determining the period of extension and the corresponding amount of the fee. The appropriate extension fee under 37 CFR 1.17(a) is calculated from: (1) the expiration date of the shortened statutory period for reply originally set in the final Office action; or (2) as set forth in (b) or (c) above, if checked. Any reply received by the Office later than three months after the mailing date of the final rejection, even if timely filed, may reduce any earned patent term adjustment. See 37 CFR 1.704(b).

NOTICE OF APPEAL

2. ☐ The Notice of Appeal was filed on _____. A brief in compliance with 37 CFR 41.37 must be filed within two months of the date of filing the Notice of Appeal (37 CFR 41.37(a)), or any extension thereof (37 CFR 41.37(e)), to avoid dismissal of the appeal. Since a Notice of Appeal has been filed, any reply must be filed within the time period set forth in 37 CFR 41.37(a).

AMENDMENTS

3. ☐ The proposed amendments filed after a final rejection, but prior to the date of filing a brief, will not be entered because
   a) ☐ They raise new issues that would require further consideration and/or search (see NOTE below);
   b) ☐ They raise the issue of new matter (see NOTE below);
   c) ☐ They are not deemed to place the application in better form for appeal by materially reducing or simplifying the issues for appeal; and/or
   d) ☐ They present additional claims without canceling a corresponding number of finally rejected claims.
   NOTE: _____. (See 37 CFR 1.116 and 41.33(a)).
4. ☐ The amendments are not in compliance with 37 CFR 1.121. See attached Notice of Non-Compliant Amendment (PTOL-324).
5. ☐ Applicant's reply has overcome the following rejection(s): _____.
6. ☐ Newly proposed or amended claim(s) _____ would be allowable if submitted in a separate, timely filed amendment canceling the non-allowable claim(s).
7. ☒ For purposes of appeal, the proposed amendment(s): (a) ☒ will not be entered, or (b) ☐ will be entered, and an explanation of how the new or amended claims would be rejected is provided below or appended.

AFFIDAVIT OR OTHER EVIDENCE

8. ☐ A declaration(s)/affidavit(s) under **37 CFR 1.130(b)** was/were filed on _____.
9. ☐ The affidavit or other evidence filed after final action, but before or on the date of filing a Notice of Appeal will not be entered because applicant failed to provide a showing of good and sufficient reasons why the affidavit or other evidence is necessary and was not earlier presented. See 37 CFR 1.116(e).
10. ☐ The affidavit or other evidence filed after the date of filing the Notice of Appeal, but prior to the date of filing a brief, will not be entered because the affidavit or other evidence failed to overcome all rejections under appeal and/or appellant fails to provide a showing of good and sufficient reasons why it is necessary and was not earlier presented. See 37 CFR 41.33(d)(1).
11. ☐ The affidavit or other evidence is entered. An explanation of the status of the claims after entry is below or attached.

REQUEST FOR RECONSIDERATION/OTHER

12. ☒ The request for reconsideration has been considered but does NOT place the application in condition for allowance because: See Continuation Sheet.
13. ☐ Note the attached Information *Disclosure Statement*(s). (PTO/SB/08) Paper No(s). _____
14. ☐ Other: _____.

STATUS OF CLAIMS

15. The status of the claim(s) is (or will be) as follows:
   Claim(s) allowed: 0.
   Claim(s) objected to: 0.
   Claim(s) rejected: 1-5, 7-11 and 17-23.
   Claim(s) withdrawn from consideration: .

/ERNEST UNELUS/
Primary Examiner, Art Unit 2181

Microchip Ex. 1002, p. 140
Microchip v. Aptiv
IPR2024-00495

Continuation of 12. does NOT place the application in condition for allowance because: Page 5 of applicant's remarks discloses "Applicant respectfully points out the hub controller 203 and the downstream switching
logic 201 are components of the USB switching hub 119, rather than a separate elements. Applicant submits that it not logical that the hub controller 203 and downstream switching logic 201 can be components of the USB switching hub 119 that are contained within USB switching hub 119 and at the very same time be interconnected to the same USB switching hub 119."

This argument is not persuasive: note, the USB switching hub 119 of Bohm discloses the function of claimed hub; similarly, hub controller 203a of Bohm teaches the function of claimed bridge and switching logic 201 of Bohm teaches the claimed function of a switch. With respect to item 3, note, the claimed language only called for simultaneously connection.

Microchip Ex. 1002, p. 141
Microchip v. Aptiv
IPR2024-00495

IN THE UNITED STATES PATENT AND TRADEMARK OFFICE

Appl. No.	:	14/487,947	Confirmation No. 2147
Applicant	:	Unwired Technology LLC	
Inventors	:	Robert Voto, et al.	
Filed	:	09/16/2014	
TC/AU	:	2181	
Examiner	:	Ernest Unelus	
Docket No.	:	DP-322037 (formerly 40651-163154)	
Title	:	Flexible Mobile Device Connectivity to Automotive Systems with USB Hubs	

RESPONSE UNDER 37 CFR § 1.116

Dear Examiner Unelus:

This paper is in response to the final office action mailed on February 9, 2016 for the above referenced application. Please consider the remarks and arguments presented herein.

I.	Listing of the Claims	Page 2
II.	Remarks and Arguments	Page 5
III.	Conclusion	Page 8

not entered
E.U. 05/03/2016

PTO/SB/81 (01-09)
Approved for use through 11/30/2011. OMB 0651-0035
U.S. Patent and Trademark Office; U.S. DEPARTMENT OF COMMERCE
Under the Paperwork Reduction Act of 1995, no persons are required to respond to a collection of information unless it displays a valid OMB control number.

POWER OF ATTORNEY OR REVOCATION OF POWER OF ATTORNEY WITH A NEW POWER OF ATTORNEY AND CHANGE OF CORRESPONDENCE ADDRESS

Application Number	14/487,947
Filing Date	09-16-2014
First Named Inventor	Robert M. Voto, et al.
Title	FLEXIBLE MOBILE DEVICE CONNECTIVITY ...
Art Unit	2181
Examiner Name	Ernest Unelus
Attorney Docket Number	DP-322037

I hereby revoke all previous powers of attorney given in the above-identified application.

☒ A Power of Attorney is submitted herewith.

OR

☐ I hereby appoint Practitioner(s) associated with the following Customer Number as my/our attorney(s) or agent(s) to prosecute the application identified above, and to transact all business in the United States Patent and Trademark Office connected therewith: 22851

OR

☐ I hereby appoint Practitioner(s) named below as my/our attorney(s) or agent(s) to prosecute the application identified above, and to transact all business in the United States Patent and Trademark Office connected therewith:

Practitioner(s) Name	Registration Number

Please recognize or change the correspondence address for the above-identified application to:

☒ The address associated with the above-mentioned Customer Number.

OR

☐ The address associated with Customer Number:

OR

☐ Firm or Individual Name					
Address					
City		State		Zip	
Country					
Telephone		Email			

I am the:

☐ Applicant/Inventor.

OR

☒ Assignee of record of the entire interest. See 37 CFR 3.71.
Statement under 37 CFR 3.73(b) (Form PTO/SB/96) submitted herewith or filed on March 17, 2016.

SIGNATURE of Applicant or Assignee of Record

Signature		Date	June 2, 2016
Name	Craig A. Baldwin	Telephone	248-813-1214
Title and Company	Assistant Secretary, Delphi Technologies, Inc.		

NOTE: Signatures of all the inventors or assignees of record of the entire interest or their representative(s) are required. Submit multiple forms if more than one signature is required, see below*.

☒ *Total of 2 forms are submitted.

This collection of information is required by 37 CFR 1.31, 1.32 and 1.33. The information is required to obtain or retain a benefit by the public which is to file (and by the USPTO to process) an application. Confidentiality is governed by 35 U.S.C. 122 and 37 CFR 1.11 and 1.14. This collection is estimated to take 3 minutes to complete, including gathering, preparing, and submitting the completed application form to the USPTO. Time will vary depending upon the individual case. Any comments on the amount of time you require to complete this form and/or suggestions for reducing this burden, should be sent to the Chief Information Officer, U.S. Patent and Trademark Office, U.S. Department of Commerce, P.O. Box 1450, Alexandria, VA 22313-1450. DO NOT SEND FEES OR COMPLETED FORMS TO THIS ADDRESS. SEND TO: **Commissioner for Patents, P.O. Box 1450, Alexandria, VA 22313-1450.**

If you need assistance in completing the form, call 1-800-PTO-9199 and select option 2.

PTO/AIA/96 (08-12)
Approved for use through 01/31/2013. OMB 0651-0031
U.S. Patent and Trademark Office; U.S. DEPARTMENT OF COMMERCE
Under the Paperwork Reduction Act of 1995, no persons are required to respond to a collection of information unless it displays a valid OMB control number.

STATEMENT UNDER 37 CFR 3.73(c)

Applicant/Patent Owner: Robert M. Voto, et al.

Application No./Patent No.: 14/487,947 Filed/Issue Date: 09-16-2014

Titled: FLEXIBLE MOBILE DEVICE CONNECTIVITY TO AUTOMOTIVE SYSTEMS WITH USB HUBS

Delphi Technologies, Inc., a corporation

(Name of Assignee) (Type of Assignee, e.g., corporation, partnership, university, government agency, etc.)

states that, for the patent application/patent identified above, it is (choose one of options 1, 2, 3 or 4 below):

1. ☑ The assignee of the entire right, title, and interest.

2. ☐ An assignee of less than the entire right, title, and interest (check applicable box):

☐ The extent (by percentage) of its ownership interest is _____%. Additional Statement(s) by the owners holding the balance of the interest must be submitted to account for 100% of the ownership interest.

☐ There are unspecified percentages of ownership. The other parties, including inventors, who together own the entire right, title and interest are:

Additional Statement(s) by the owner(s) holding the balance of the interest must be submitted to account for the entire right, title, and interest.

3. ☐ The assignee of an undivided interest in the entirety (a complete assignment from one of the joint inventors was made). The other parties, including inventors, who together own the entire right, title, and interest are:

Additional Statement(s) by the owner(s) holding the balance of the interest must be submitted to account for the entire right, title, and interest.

4. ☐ The recipient, via a court proceeding or the like (*e.g.*, bankruptcy, probate), of an undivided interest in the entirety (a complete transfer of ownership interest was made). The certified document(s) showing the transfer is attached.

The interest identified in option 1, 2 or 3 above (not option 4) is evidenced by either (choose one of options A or B below):

A. ☐ An assignment from the inventor(s) of the patent application/patent identified above. The assignment was recorded in the United States Patent and Trademark Office at Reel _____, Frame _____, or for which a copy thereof is attached.

B. ☑ A chain of title from the inventor(s), of the patent application/patent identified above, to the current assignee as follows:

1. From: Robert M. Voto, et al. To: Unwired Technology LLC

The document was recorded in the United States Patent and Trademark Office at Reel 033785, Frame 0399, or for which a copy thereof is attached.

2. From: Unwired Technology LLC To: Delphi Data connectivity US LLC

The document was recorded in the United States Patent and Trademark Office at Reel 038014, Frame 0604, or for which a copy thereof is attached.

This collection of information is required by 37 CFR 3.73(b). The information is required to obtain or retain a benefit by the public which is to file (and by the USPTO to process) an application. Confidentiality is governed by 35 U.S.C. 122 and 37 CFR 1.11 and 1.14. This collection is estimated to take 12 minutes to complete, including gathering, preparing, and submitting the completed application form to the USPTO. Time will vary depending upon the individual case. Any comments on the amount of time you require to complete this form and/or suggestions for reducing this burden, should be sent to the Chief Information Officer, U.S. Patent and Trademark Office, U.S. Department of Commerce, P.O. Box 1450, Alexandria, VA 22313-1450. DO NOT SEND FEES OR COMPLETED FORMS TO THIS ADDRESS. **SEND TO: Commissioner for Patents, P.O. Box 1450, Alexandria, VA 22313-1450.**

If you need assistance in completing the form, call 1-800-PTO-9199 and select option 2.

PTO/AIA/96 (08-12)
Approved for use through 01/31/2013. OMB 0651-0031
U.S. Patent and Trademark Office; U.S. DEPARTMENT OF COMMERCE
Under the Paperwork Reduction Act of 1995, no persons are required to respond to a collection of information unless it displays a valid OMB control number.

STATEMENT UNDER 37 CFR 3.73(c)

3. From: Delphi Data Connectivity US LLC To: Delphi Technologies, Inc.

The document was recorded in the United States Patent and Trademark Office at
Reel 038035, Frame 0127, or for which a copy thereof is attached.

4. From: _____ To: _____

The document was recorded in the United States Patent and Trademark Office at
Reel _____, Frame _____, or for which a copy thereof is attached.

5. From: _____ To: _____

The document was recorded in the United States Patent and Trademark Office at
Reel _____, Frame _____, or for which a copy thereof is attached.

6. From: _____ To: _____

The document was recorded in the United States Patent and Trademark Office at
Reel _____, Frame _____, or for which a copy thereof is attached.

☐ Additional documents in the chain of title are listed on a supplemental sheet(s).

☐ As required by 37 CFR 3.73(c)(1)(i), the documentary evidence of the chain of title from the original owner to the assignee was, or concurrently is being, submitted for recordation pursuant to 37 CFR 3.11.

[NOTE: A separate copy (i.e., a true copy of the original assignment document(s)) must be submitted to Assignment Division in accordance with 37 CFR Part 3, to record the assignment in the records of the USPTO. See MPEP 302.08]

The undersigned (whose title is supplied below) is authorized to act on behalf of the assignee.

Signature	June 2, 2016 Date
Craig A. Baldwin Printed or Typed Name	Assistant Secretary 37772 Title or Registration Number

Electronic Acknowledgement Receipt

EFS ID:	25949966
Application Number:	14487947
International Application Number:	
Confirmation Number:	2147
Title of Invention:	FLEXIBLE MOBILE DEVICE CONNECTIVITY TO AUTOMOTIVE SYSTEMS WITH USB HUBS
First Named Inventor/Applicant Name:	Robert Voto
Customer Number:	279
Filer:	Lawrence Dean Hazelton/Kandace Powell
Filer Authorized By:	Lawrence Dean Hazelton
Attorney Docket Number:	40651-163154
Receipt Date:	02-JUN-2016
Filing Date:	16-SEP-2014
Time Stamp:	14:09:42
Application Type:	Utility under 35 USC 111(a)

Payment information:

Submitted with Payment	no

File Listing:

Document Number	Document Description	File Name	File Size(Bytes)/ Message Digest	Multi Part /.zip	Pages (if appl.)
1	Transmittal Letter	DP322037_Trans_Ltr_POA.pdf	28407 6914ebc7f4aa0155440a3bf3ea186dfe2e191f03	no	1

Warnings:

The page size in the PDF is too large. The pages should be 8.5 x 11 or A4. If this PDF is submitted, the pages will be resized upon entry into the Image File Wrapper and may affect subsequent processing					
Information:					
2	Power of Attorney	DP322037_POWER.pdf	100140 82d539f2cbebe5825707f763390a17e932dbf7cd	no	1
Warnings:					
The page size in the PDF is too large. The pages should be 8.5 x 11 or A4. If this PDF is submitted, the pages will be resized upon entry into the Image File Wrapper and may affect subsequent processing					
Information:					
3	Assignee showing of ownership per 37 CFR 3.73	DP322037_373c_Statement.pdf	108824 4b7e9787ea581b24813ea59d09d612e0d07b8b86	no	2
Warnings:					
The page size in the PDF is too large. The pages should be 8.5 x 11 or A4. If this PDF is submitted, the pages will be resized upon entry into the Image File Wrapper and may affect subsequent processing					
Information:					
			Total Files Size (in bytes):	237371	

This Acknowledgement Receipt evidences receipt on the noted date by the USPTO of the indicated documents, characterized by the applicant, and including page counts, where applicable. It serves as evidence of receipt similar to a Post Card, as described in MPEP 503.

<u>New Applications Under 35 U.S.C. 111</u>
If a new application is being filed and the application includes the necessary components for a filing date (see 37 CFR 1.53(b)-(d) and MPEP 506), a Filing Receipt (37 CFR 1.54) will be issued in due course and the date shown on this Acknowledgement Receipt will establish the filing date of the application.

<u>National Stage of an International Application under 35 U.S.C. 371</u>
If a timely submission to enter the national stage of an international application is compliant with the conditions of 35 U.S.C. 371 and other applicable requirements a Form PCT/DO/EO/903 indicating acceptance of the application as a national stage submission under 35 U.S.C. 371 will be issued in addition to the Filing Receipt, in due course.

<u>New International Application Filed with the USPTO as a Receiving Office</u>
If a new international application is being filed and the international application includes the necessary components for an international filing date (see PCT Article 11 and MPEP 1810), a Notification of the International Application Number and of the International Filing Date (Form PCT/RO/105) will be issued in due course, subject to prescriptions concerning national security, and the date shown on this Acknowledgement Receipt will establish the international filing date of the application.

IN THE UNITED STATES PATENT AND TRADEMARK OFFICE

US Serial No.:	14/487,947
Filed:	September 16, 2014
Title:	Flexible Mobile Device Connectivity To Automotive Systems With USB Hubs
Inventor:	Robert M. Voto, et al.
Art Unit:	2181
Examiner:	Ernest Unelus
Confirmation No.:	2147
Attorney Docket:	DP-322037

TRANSMITTAL LETTER

Commissioner for Patents
P. O. Box 1450
Alexandria, VA 22313-1450

Dear Sir:

Enclosed are the following items for filing with the subject patent:

1. Revocation of Power with New Power (PTO Form PTO/SB/81); and

2. Statement Under 37 CFR 3.73(c).

Please charge the fee, if any, to Deposit Account No. 50-0831.

Respectfully submitted,

Craig A. Baldwin – Reg. No. 37,772
Delphi Technologies, Inc.
248-813-1214

PTO/SB/30EFS (07-09)
Approved for use through 07/31/2012. OMB 0651-0031
U.S. Patent and Trademark Office; U.S. DEPARTMENT OF COMMERCE
Under the Paperwork Reduction Act of 1995, no persons are required to respond to a collection of information unless it contains a valid OMB control number.

REQUEST FOR CONTINUED EXAMINATION(RCE)TRANSMITTAL
(Submitted Only via EFS-Web)

Application Number	14487947	Filing Date	2014-09-16	Docket Number (if applicable)	DP-322037	Art Unit	2181
First Named Inventor	Robert Voto, et al.			Examiner Name	Ernest Unelus		

This is a Request for Continued Examination (RCE) under 37 CFR 1.114 of the above-identified application.
Request for Continued Examination (RCE) practice under 37 CFR 1.114 does not apply to any utility or plant application filed prior to June 8, 1995, or to any design application. The Instruction Sheet for this form is located at WWW.USPTO.GOV

SUBMISSION REQUIRED UNDER 37 CFR 1.114

Note: If the RCE is proper, any previously filed unentered amendments and amendments enclosed with the RCE will be entered in the order in which they were filed unless applicant instructs otherwise. If applicant does not wish to have any previously filed unentered amendment(s) entered, applicant must request non-entry of such amendment(s).

☐ Previously submitted. If a final Office action is outstanding, any amendments filed after the final Office action may be considered as a submission even if this box is not checked.

- ☐ Consider the arguments in the Appeal Brief or Reply Brief previously filed on _____
- ☐ Other _____

☒ Enclosed

- ☒ Amendment/Reply
- ☐ Information Disclosure Statement (IDS)
- ☐ Affidavit(s)/ Declaration(s)
- ☐ Other _____

MISCELLANEOUS

☐ Suspension of action on the above-identified application is requested under 37 CFR 1.103(c) for a period of months _____
(Period of suspension shall not exceed 3 months; Fee under 37 CFR 1.17(i) required)

☐ Other _____

FEES

☒ **The RCE fee under 37 CFR 1.17(e) is required by 37 CFR 1.114 when the RCE is filed.**
The Director is hereby authorized to charge any underpayment of fees, or credit any overpayments, to Deposit Account No 500831

SIGNATURE OF APPLICANT, ATTORNEY, OR AGENT REQUIRED

X Patent Practitioner Signature
Applicant Signature

PTO/SB/30EFS (07-09)
Approved for use through 07/31/2012. OMB 0651-0031
U.S. Patent and Trademark Office; U.S. DEPARTMENT OF COMMERCE
Under the Paperwork Reduction Act of 1995, no persons are required to respond to a collection of information unless it contains a valid OMB control number.

Signature of Registered U.S. Patent Practitioner			
Signature	/Robert J. Myers/	Date (YYYY-MM-DD)	2016-06-06
Name	Robert J. Myers	Registration Number	69783

This collection of information is required by 37 CFR 1.114. The information is required to obtain or retain a benefit by the public which is to file (and by the USPTO to process) an application. Confidentiality is governed by 35 U.S.C. 122 and 37 CFR 1.11 and 1.14. This collection is estimated to take 12 minutes to complete, including gathering, preparing, and submitting the completed application form to the USPTO. Time will vary depending upon the individual case. Any comments on the amount of time you require to complete this form and/or suggestions for reducing this burden, should be sent to the Chief Information Officer, U.S. Patent and Trademark Office, U.S. Department of Commerce, P.O. Box 1450, Alexandria, VA 22313-1450.

If you need assistance in completing the form, call 1-800-PTO-9199 and select option 2.

Privacy Act Statement

The Privacy Act of 1974 (P.L. 93-579) requires that you be given certain information in connection with your submission of the attached form related to a patent application or patent. Accordingly, pursuant to the requirements of the Act, please be advised that: (1) the general authority for the collection of this information is 35 U.S.C. 2(b)(2); (2) furnishing of the information solicited is voluntary; and (3) the principal purpose for which the information is used by the U.S. Patent and Trademark Office is to process and/or examine your submission related to a patent application or patent. If you do not furnish the requested information, the U.S. Patent and Trademark Office may not be able to process and/or examine your submission, which may result in termination of proceedings or abandonment of the application or expiration of the patent.

The information provided by you in this form will be subject to the following routine uses:

1. The information on this form will be treated confidentially to the extent allowed under the Freedom of Information Act (5 U.S.C. 552) and the Privacy Act (5 U.S.C. 552a). Records from this system of records may be disclosed to the Department of Justice to determine whether the Freedom of Information Act requires disclosure of these records.

2. A record from this system of records may be disclosed, as a routine use, in the course of presenting evidence to a court, magistrate, or administrative tribunal, including disclosures to opposing counsel in the course of settlement negotiations.

3. A record in this system of records may be disclosed, as a routine use, to a Member of Congress submitting a request involving an individual, to whom the record pertains, when the individual has requested assistance from the Member with respect to the subject matter of the record.

4. A record in this system of records may be disclosed, as a routine use, to a contractor of the Agency having need for the information in order to perform a contract. Recipients of information shall be required to comply with the requirements of the Privacy Act of 1974, as amended, pursuant to 5 U.S.C. 552a(m).

5. A record related to an International Application filed under the Patent Cooperation Treaty in this system of records may be disclosed, as a routine use, to the International Bureau of the World Intellectual Property Organization, pursuant to the Patent Cooperation Treaty.

6. A record in this system of records may be disclosed, as a routine use, to another federal agency for purposes of National Security review (35 U.S.C. 181) and for review pursuant to the Atomic Energy Act (42 U.S.C. 218(c)).

7. A record from this system of records may be disclosed, as a routine use, to the Administrator, General Services, or his/her designee, during an inspection of records conducted by GSA as part of that agency's responsibility to recommend improvements in records management practices and programs, under authority of 44 U.S.C. 2904 and 2906. Such disclosure shall be made in accordance with the GSA regulations governing inspection of records for this purpose, and any other relevant (i.e., GSA or Commerce) directive. Such disclosure shall not be used to make determinations about individuals.

8. A record from this system of records may be disclosed, as a routine use, to the public after either publication of the application pursuant to 35 U.S.C. 122(b) or issuance of a patent pursuant to 35 U.S.C. 151. Further, a record may be disclosed, subject to the limitations of 37 CFR 1.14, as a routine use, to the public if the record was filed in an application which became abandoned or in which the proceedings were terminated and which application is referenced by either a published application, an application open to public inspections or an issued patent.

9. A record from this system of records may be disclosed, as a routine use, to a Federal, State, or local law enforcement agency, if the USPTO becomes aware of a violation or potential violation of law or regulation.

Electronic Patent Application Fee Transmittal

Application Number:	14487947
Filing Date:	16-Sep-2014
Title of Invention:	FLEXIBLE MOBILE DEVICE CONNECTIVITY TO AUTOMOTIVE SYSTEMS WITH USB HUBS
First Named Inventor/Applicant Name:	Robert Voto
Filer:	Lawrence Dean Hazelton/Kandace Powell
Attorney Docket Number:	40651-163154

Filed as Large Entity

Filing Fees for Utility under 35 USC 111(a)

Description	Fee Code	Quantity	Amount	Sub-Total in USD($)
Basic Filing:				
Pages:				
Claims:				
Miscellaneous-Filing:				
Petition:				
Patent-Appeals-and-Interference:				
Post-Allowance-and-Post-Issuance:				
Extension-of-Time:				

Description	Fee Code	Quantity	Amount	Sub-Total in USD($)
Extension - 1 month with $0 paid	1251	1	200	200
Miscellaneous:				
Request for Continued Examination	1801	1	1200	1200
		Total in USD ($)		**1400**

Electronic Acknowledgement Receipt

EFS ID:	25975552
Application Number:	14487947
International Application Number:	
Confirmation Number:	2147
Title of Invention:	FLEXIBLE MOBILE DEVICE CONNECTIVITY TO AUTOMOTIVE SYSTEMS WITH USB HUBS
First Named Inventor/Applicant Name:	Robert Voto
Customer Number:	279
Filer:	Lawrence Dean Hazelton/Kandace Powell
Filer Authorized By:	Lawrence Dean Hazelton
Attorney Docket Number:	40651-163154
Receipt Date:	06-JUN-2016
Filing Date:	16-SEP-2014
Time Stamp:	12:49:55
Application Type:	Utility under 35 USC 111(a)

Payment information:

Submitted with Payment	yes
Payment Type	DA
Payment was successfully received in RAM	$1400
RAM confirmation Number	060616INTEFSW00011372500831
Deposit Account	500831
Authorized User	Kandace Powell
The Director of the USPTO is hereby authorized to charge indicated fees and credit any overpayment as follows:	

File Listing:

Document Number	Document Description	File Name	File Size(Bytes)/ Message Digest	Multi Part /.zip	Pages (if appl.)
1	Amendment Submitted/Entered with Filing of CPA/RCE	DP322037_RCE_09FE16.pdf	109433 fccccaa86afb7280f38af80f0e79203e4f0a39f9	no	9
Warnings:					
Information:					
2	Request for Continued Examination (RCE)	DP322037_RCE_06JUN16_sb0030e_fill.pdf	697596 44aca1aee3ab296c4002157148e30835fd0ef384	no	3
Warnings:					
Information:					
3	Fee Worksheet (SB06)	fee-info.pdf	33024 5be7c4f1e26f56577ab429acc265eb6bf0141b6a	no	2
Warnings:					
Information:					
		Total Files Size (in bytes):	840053		

This Acknowledgement Receipt evidences receipt on the noted date by the USPTO of the indicated documents, characterized by the applicant, and including page counts, where applicable. It serves as evidence of receipt similar to a Post Card, as described in MPEP 503.

<u>New Applications Under 35 U.S.C. 111</u>
If a new application is being filed and the application includes the necessary components for a filing date (see 37 CFR 1.53(b)-(d) and MPEP 506), a Filing Receipt (37 CFR 1.54) will be issued in due course and the date shown on this Acknowledgement Receipt will establish the filing date of the application.

<u>National Stage of an International Application under 35 U.S.C. 371</u>
If a timely submission to enter the national stage of an international application is compliant with the conditions of 35 U.S.C. 371 and other applicable requirements a Form PCT/DO/EO/903 indicating acceptance of the application as a national stage submission under 35 U.S.C. 371 will be issued in addition to the Filing Receipt, in due course.

<u>New International Application Filed with the USPTO as a Receiving Office</u>
If a new international application is being filed and the international application includes the necessary components for an international filing date (see PCT Article 11 and MPEP 1810), a Notification of the International Application Number and of the International Filing Date (Form PCT/RO/105) will be issued in due course, subject to prescriptions concerning national security, and the date shown on this Acknowledgement Receipt will establish the international filing date of the application.

IN THE UNITED STATES PATENT AND TRADEMARK OFFICE

Appl. No.	:	14/487,947	Confirmation No. 2147
Applicant	:	Unwired Technology LLC	
Inventors	:	Robert Voto, et al.	
Filed	:	09/16/2014	
TC/AU	:	2181	
Examiner	:	Ernest Unelus	
Docket No.	:	DP-322037 (formerly 40651-163154)	
Title	:	Flexible Mobile Device Connectivity to Automotive Systems with USB Hubs	

AMENDMENT

Dear Examiner Unelus:

In conjunction with a **Request for Continued Examination** under 37 C.F.R § 1.114, filed concurrently with this Amendment, please amend the above identified application and consider the remarks and arguments set forth herein. The amendments, remarks, and arguments contained herein are responsive to a Final Office Action sent February 9, 2016 and an Advisory Action sent May 16, 2016.

I.	Amendments to the Claims	Page 2
II.	Remarks and Arguments	Page 5
III.	Conclusion	Page 9

PETITION FOR EXTENSION OF TIME

Applicant hereby petitions the Director of the United States Patent and Trademark Office under 37 C.F.R § 1.136(a) to extend the time for reply to the Office Action dated February 9, 2016 for one (1) month from May 9, 2016 to June 9, 2016. Please charge the fee for this extension according to 37 C.F.R § 1.17(a)(1) to Delphi Technologies, Inc. Deposit Account No. 50-0831, in accordance with the last paragraph of this Amendment.

LISTING OF THE CLAIMS

A listing of the pending claims is presented here for the Examiner's convenience.

1. (Previously presented) A system disposed within a vehicle, comprising:

an embedded Universal Serial Bus (USB) Host system;

a USB Hub interconnected to the embedded USB Host system;

a USB Bridge interconnected to the USB Hub; and

a USB routing switch interconnected to the USB Bridge, the USB Hub, and a USB Port, wherein the USB routing switch is configured to connect the USB Port to the USB Hub through the USB Bridge when a consumer device connected to the USB Port is acting as a USB Host, and wherein the USB routing switch is configured to connect the USB Port directly to the USB Hub when the consumer device connected to the USB Port is acting as a USB Device, thereby rendering the consumer device compatible with the embedded USB Host system.

2. (Previously presented) A system as recited in claim 1, wherein the USB routing switch is configured to connect a first USB Port of a plurality of USB Ports to the USB Hub through the USB Bridge when a first consumer device connected to the first USB Port is acting as a USB Host, and wherein the USB routing switch is configured to simultaneously connect a second USB Port of the plurality of USB Ports directly to the USB Hub when a second consumer device connected to the second USB Port is acting as a USB Device, thereby rendering the first and second consumer devices compatible to function simultaneously with the embedded USB Host system.

3. (Previously presented) A system as recited in claim 1, wherein the system is configured to recognize whether the consumer device connected to the USB Port is configured to act as a USB Host or as a USB Device and control the USB routing switch accordingly.

4. (Previously presented) A system as recited in claim 7, wherein the system is configured to dynamically switch operation of USB Ports connected to the USB Hub Module between USB Device mode and USB Host mode.

Microchip Ex. 1002, p. 157
Microchip v. Aptiv
IPR2024-00495

5. (Previously presented) A system as recited in claim 1, wherein the system further comprises an infotainment system containing the embedded USB Host system.

6. (Cancelled)

7. (Previously presented) A system as recited in claim 1, wherein the USB Hub, the USB Bridge, and the USB routing switch system are disposed within a USB Hub Module.

8. (Previously presented) A system as recited in claim 7, wherein the USB Hub Module is connected to the embedded USB Host system and a plurality of USB Ports connected to a plurality of consumer devices.

9. (Previously presented) A system as recited in claim 8, wherein the USB routing switch is configured to connect each consumer device of the plurality of consumer devices to either the USB Bridge or the USB Hub based on whether each consumer device attached to each USB Port in the plurality of USB Ports is configured to act as a USB Host or a USB Device.

10. (Previously presented) A system as recited in claim 1, wherein the USB routing switch comprises a plurality of USB analog multiplexing switches.

11. (Previously presented) A system as recited in claim 1, wherein the USB Bridge is configured to control the USB routing switch.

12. – 16. (Cancelled)

17. (Previously presented) A system as recited in claim 23, wherein the USB Hub, the USB Bridge, and the USB routing switch system are integrated in an Integrated Circuit (IC).

18. (Previously presented) A system as recited in claim 1, wherein the USB Bridge comprises a bridge controller as well as endpoint buffers.

19. (Previously presented) A system as recited in claim 18, wherein the endpoint buffers are configured to support a USB data connection pipe between an infotainment system and the consumer device.

Microchip Ex. 1002, p. 158
Microchip v. Aptiv
IPR2024-00495

20. (Previously presented) A system as recited in claim 1, wherein the system further comprises an infotainment system with a single USB host which is electrically connected to the USB Hub via a single USB data connection.

21. (Previously presented) A system as recited in claim 1, wherein the system further comprises an infotainment system, wherein the system is configured to support simultaneous active USB data connections between the infotainment system and multiple consumer devices, at least one of which is a USB Host while others are USB Devices.

22. (Previously presented) A system as recited in claim 1, wherein the system further comprises an infotainment system, wherein the system is configured to support simultaneous active USB data connections between the infotainment system and some combination of embedded devices and consumer devices that are USB Devices along with at least one that is a USB Host.

23. (Previously presented) A system as recited in claim 1, wherein the USB routing switch comprises digital routing logic.

REMARKS AND ARGUMENTS

Claim Rejections based on 35 USC § 102(a)(1)

Claims 1-5, 7-9, and 18-23 stand rejected under 35 USC § 102(a)(1) as being anticipated by Bohm, et al. [U.S. Patent Publication No. 2006/0227759], hereinafter referred to as Bohm.

Pending claim 1is directed to a system disposed within a vehicle that includes an embedded Universal Serial Bus (USB) Host system, a USB Hub interconnected to the embedded USB Host system, a USB Bridge interconnected to the USB Hub, and a USB routing switch interconnected to the USB Bridge, the USB Hub, and a USB Port. The USB routing switch is configured to connect the USB Port to the USB Hub through the USB Bridge when a consumer device connected to the USB Port is acting as a USB Host. The USB routing switch is configured to connect the USB Port directly to the USB Hub when the consumer device connected to the USB Port is acting as a USB Device, thereby rendering the consumer device compatible with the embedded USB Host system.

In Item 2, of the instant office action, Examiner asserts that Fig. 3 and paragraphs 0037 and 0040 of Bohm disclose all of the features of pending claim 1. Particularly, Examiner asserts that the USB Hub interconnected to the USB Host system is shown by the USB switching hub 119 of Bohm and the USB Bridge interconnected to the USB Hub is shown by hub controller 203 of Bohm. Examiner also asserts that the USB routing switch is shown by the downstream switching logic 201 of Bohm.

Applicant respectfully points out the hub controller 203 and the downstream switching logic 201 are components of the USB switching hub 119, rather than a separate elements.

The BPAI has interpreted Federal Circuit case law to say it's improper for the Examiner to rely on the same structure to dislose two separate claimed elements. In several anticipation rejections where this issue arose, the Board relied upon the following citations:

Lantech, Inc. v. Keip Machine Co., 32 F.3d 542 (Fed. Cir. 1994) (in infringement context, a single conveyor held to not meet claim element requiring at least two conveyors); and

Microchip Ex. 1002, p. 160
Microchip v. Aptiv
IPR2024-00495

In re Robertson, 169 F.3d 743 (Fed. Cir. 1999) (claim requiring three separate means not anticipated by structure containing two means where one of the two means was argued to meet two of the three claimed means).

Following are some of the BPAI decisions where the Board has applied the doctrine from *In re Robertson* and *Lantech* to anticipation rejections.

Ex parte Weideman: The claims were directed to a vehicle seat. The Board agreed that the reference disclosed the claimed seat back and seat bottom, but found the Examiner's rejection was "flawed."

> The Examiner finds that the horizontally extending portions of frame members 3, 4, also identified more specifically by reference numeral 7, not only constitute part of the seat bottom, but also constitute the structure in Lohr that reads on the claimed "center support extending forwardly from [the] central pillar". Consistent with the principle that all limitations in a claim must be considered to be meaningful, ***it is improper to rely on the same structure in the Lohr reference as being responsive to two different elements*** (seat bottom and center support) in claim 1. (*Weideman*, internal citations omitted.)

Ex parte Koutsky: The claims were directed to a vehicle seat suspension apparatus. The Board agreed that the flange and rollers in the reference correspond to the claimed "means for allowing reciprocating movement," but found the Examiner's reading of the reference with respect to other claimed elements was in error:

> However, the Examiner uses the same [flange] 56 and guide rail 34 as the elongated guide and guide engaging member. Thus, the Examiner has used the same element or structure in the Koutsky reference to satisfy two different limitations from the claimed subject matter. However, ***when a claim requires two separate elements using one element construed as performing two separate functions will not suffice to meet the terms of the claim.*** Accordingly, it is our finding that Koutsky does not anticipate the claimed subject matter on appeal. (*Koutsky*, internal citations omitted.)

Microchip Ex. 1002, p. 161
Microchip v. Aptiv
IPR2024-00495

Ex parte Konstant: The claims were directed to a storage rack, which included a horizontal deck beam interconnected between two columns. The beam included an upper flange supporting a locking cross bar, and an outer face in which an aperture was located. The Examiner applied this reference:

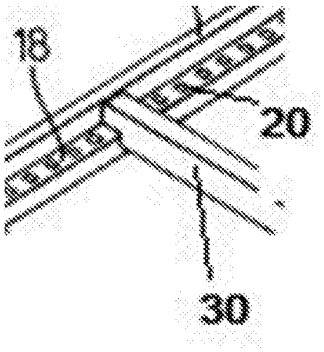

The Examiner found the reference's support surface (18) satisfied the "upper flange" (with locking cross bar 30), and that the same support surface 18 satisfied the claimed outer face containing an aperture (20). The Board reversed the rejection:

> The Examiner erroneously read both the upper flange/upper support width and the outer face on the same structure in Mulholland. Consistent with the principle that all limitations in a claim must be considered to be meaningful, it is improper to rely on the same structure in the Mulholland reference as being responsive to two different elements (the upper flange/upper support width and the outer face) in claims 1, 10, and 18. (*Konstant*, internal citations omitted.)

The rejection of claim 1 relies on the assertion that the USB switching hub 119 shows the claimed USB Hub interconnected to the USB Host system and that the hub controller 203 and the downstream switching logic 201, which are components of this USB switching hub 119, show the USB Bridge interconnected to the USB Hub and the USB routing switch respectively. Consequently, one element, the USB switching hub 119, is relied upon to show three different claimed elements: the USB Hub interconnected to the USB Host system, the USB Bridge interconnected to the USB Hub, and the USB routing switch. Therefore the rejection of claim 1

uses the same reasoning as was used in the cases cited in *Weideman*, *Koutsky*, and *Konstant* where this reasoning was determined to be improper.

In addition, the hub controller 203 and the downstream switching logic 201 are components of the USB switching hub 119, rather than a separate elements. Applicant submits that it not logical that the hub controller 203 and downstream switching logic 201 are components of the USB switching hub 119 and contained within USB switching hub 119 while at the very same time being separate elements that are interconnected to the same USB switching hub 119.

Therefore, Applicant respectfully submits that Bohm does not show a USB Bridge interconnected to the USB Hub or a USB routing switch interconnected to USB Bridge. Since Bohm does not show each and every element in Applicant's claim 1, it is not anticipated by Bohm and a rejection of claim 1 under 35 USC § 102(a)(1) is improper.

Though dependent claims 2-5, 7-9, and 18-23 each contains their own allowable subject matter, these claims are allowable at least due to their dependence on claim 1 which is believed to be in condition for allowance.

For all of the reasons listed above, Applicant submits that the rejection of Applicant's claim 1 and claims 2-5, 7-9, and 18-23 dependent thereon is improper. Applicant respectfully requests that the rejection of claims 1-5, 7-9, and 18-23 under 35 USC § 102(a)(1) be reconsidered and withdrawn and that the claims be allowed.

Claim Rejections based on 35 USC § 103(a)

Claims 10 and 17 stand rejected under 35 USC §103(a) as being unpatentable over Bohm in view of Wright [U.S. Patent No. 7,502,878].

Though dependent claims 10 and 17 each contains their own allowable subject matter, these claims are allowable at least due to their dependence on claim 1 which is believed to be in condition for allowance.

Microchip Ex. 1002, p. 163
Microchip v. Aptiv
IPR2024-00495

CONCLUSION

It is believed that only allowable claims remain in the application. Applicant respectfully requests that a timely Notice of Allowance be issued in this case.

If it would further prosecution of the application, the Examiner is urged to contact the undersigned at the phone number provided.

The Commissioner is hereby authorized to charge any fees associated with this communication and/or credit any overpayments to Delphi Technologies, Inc., Deposit Account No. 50-0831.

Respectfully submitted,

/Robert J. Myers/

Robert J. Myers
Reg. No. 69,783
Delphi Technologies, Inc.
Legal Staff – M/C 483-400-402
P.O. Box 5052
Troy, Michigan 48007-5052
(248) 813-2512
bob.myers@delphi.com

Microchip Ex. 1002, p. 164
Microchip v. Aptiv
IPR2024-00495

PTO/SB/06 (09-11)
Approved for use through 1/31/2014. OMB 0651-0032
U.S. Patent and Trademark Office; U.S. DEPARTMENT OF COMMERCE
Under the Paperwork Reduction Act of 1995, no persons are required to respond to a collection of information unless it displays a valid OMB control number.

PATENT APPLICATION FEE DETERMINATION RECORD Substitute for Form PTO-875	Application or Docket Number 14/487,947	Filing Date 09/16/2014	☐ To be Mailed

ENTITY: ☐ LARGE ☒ SMALL ☐ MICRO

APPLICATION AS FILED – PART I

FOR	(Column 1) NUMBER FILED	(Column 2) NUMBER EXTRA	RATE ($)	FEE ($)
☐ BASIC FEE (37 CFR 1.16(a), (b), or (c))	N/A	N/A	N/A	
☐ SEARCH FEE (37 CFR 1.16(k), (i), or (m))	N/A	N/A	N/A	
☐ EXAMINATION FEE (37 CFR 1.16(o), (p), or (q))	N/A	N/A	N/A	
TOTAL CLAIMS (37 CFR 1.16(i))	minus 20 =	*	x $ =	
INDEPENDENT CLAIMS (37 CFR 1.16(h))	minus 3 =	*	x $ =	
☐ APPLICATION SIZE FEE (37 CFR 1.16(s))	If the specification and drawings exceed 100 sheets of paper, the application size fee due is $310 ($155 for small entity) for each additional 50 sheets or fraction thereof. See 35 U.S.C. 41(a)(1)(G) and 37 CFR 1.16(s).			
☐ MULTIPLE DEPENDENT CLAIM PRESENT (37 CFR 1.16(j))				
* If the difference in column 1 is less than zero, enter "0" in column 2.			TOTAL	

APPLICATION AS AMENDED – PART II

AMENDMENT

06/06/2016	(Column 1) CLAIMS REMAINING AFTER AMENDMENT		(Column 2) HIGHEST NUMBER PREVIOUSLY PAID FOR	(Column 3) PRESENT EXTRA	RATE ($)	ADDITIONAL FEE ($)
Total (37 CFR 1.16(i))	* 17	Minus	** 22	= 0	x $40 =	0
Independent (37 CFR 1.16(h))	* 1	Minus	***2	= 0	x $210 =	0
☐ Application Size Fee (37 CFR 1.16(s))						
☐ FIRST PRESENTATION OF MULTIPLE DEPENDENT CLAIM (37 CFR 1.16(j))						
					TOTAL ADD'L FEE	0

AMENDMENT

	(Column 1) CLAIMS REMAINING AFTER AMENDMENT		(Column 2) HIGHEST NUMBER PREVIOUSLY PAID FOR	(Column 3) PRESENT EXTRA	RATE ($)	ADDITIONAL FEE ($)
Total (37 CFR 1.16(i))	*	Minus	**	=	x $ =	
Independent (37 CFR 1.16(h))	*	Minus	***	=	x $ =	
☐ Application Size Fee (37 CFR 1.16(s))						
☐ FIRST PRESENTATION OF MULTIPLE DEPENDENT CLAIM (37 CFR 1.16(j))						
					TOTAL ADD'L FEE	

* If the entry in column 1 is less than the entry in column 2, write "0" in column 3.
** If the "Highest Number Previously Paid For" IN THIS SPACE is less than 20, enter "20".
*** If the "Highest Number Previously Paid For" IN THIS SPACE is less than 3, enter "3".
The "Highest Number Previously Paid For" (Total or Independent) is the highest number found in the appropriate box in column 1.

LIE
/CHARLENE /. HERBERT/

This collection of information is required by 37 CFR 1.16. The information is required to obtain or retain a benefit by the public which is to file (and by the USPTO to process) an application. Confidentiality is governed by 35 U.S.C. 122 and 37 CFR 1.14. This collection is estimated to take 12 minutes to complete, including gathering, preparing, and submitting the completed application form to the USPTO. Time will vary depending upon the individual case. Any comments on the amount of time you require to complete this form and/or suggestions for reducing this burden, should be sent to the Chief Information Officer, U.S. Patent and Trademark Office, U.S. Department of Commerce, P.O. Box 1450, Alexandria, VA 22313-1450. DO NOT SEND FEES OR COMPLETED FORMS TO THIS ADDRESS. **SEND TO: Commissioner for Patents, P.O. Box 1450, Alexandria, VA 22313-1450.**
If you need assistance in completing the form, call 1-800-PTO-9199 and select option 2.

Doc Code: N572

UNITED STATES PATENT AND TRADEMARK OFFICE

UNITED STATES DEPARTMENT OF COMMERCE
United States Patent and Trademark Office
Address: COMMISSIONER FOR PATENTS
P.O. Box 1450
Alexandria, Virginia 22313-1450
www.uspto.gov

APPLICATION NUMBER	FILING DATE	FIRST NAMED APPLICANT	ATTY. DOCKET NO./TITLE
14/487,947	09/16/2014	Robert Voto	40651-163154

CONFIRMATION NO. 2147

OC000000083585974

279
MARIA E. KITZ
CLARK HILL PLC
150 NORTH MICHIGAN AVENUE
SUITE 2700
CHICAGO, IL 60601

Cc: DELPHI TECHNOLOGIES, INC.
P.O. BOX 5052
M/C 483-400-402
TROY, MI 48007-5052

Date Mailed: 06/10/2016

DENIAL OF REQUEST FOR POWER OF ATTORNEY

The request for Power of Attorney filed 06/02/16 is acknowledged. However, the request cannot be granted at this time for the reason stated below.

- ☐ The Power of Attorney you provided did not comply with the new Power of Attorney rules that became effective on June 25, 2004. See 37 CFR 1.32.
- ☐ The revocation is not signed by the applicant, the assignee of the entire interest, or one particular principal attorney having the authority to revoke.
- ☐ The Power of Attorney is from an assignee and the Certificate required by 37 CFR 3.73 has not been received.
- ☐ The person signing for the assignee has omitted their empowerment to sign on behalf of the assignee.
- ☐ The inventor(s) is without authority to appoint attorneys since the assignee has intervened as provided by 37 CFR 3.71.
- ☐ The signature(s) of , a co-inventor in this application, has been omitted. The Power of Attorney will be entered upon receipt of confirmation signed by said co-inventor(s).
- ☐ The person(s) appointed in the Power of Attorney is not registered to practice before the U.S. Patent and Trademark Office.
- ☐ Only one Customer Number can be designated for the Power of Attorney in an application. The Customer Number that was captured is the first Customer Number provided on the Power of Attorney document.

Doc Code: N572

UNITED STATES PATENT AND TRADEMARK OFFICE

UNITED STATES DEPARTMENT OF COMMERCE
United States Patent and Trademark Office
Address: COMMISSIONER FOR PATENTS
P.O. Box 1450
Alexandria, Virginia 22313-1450
www.uspto.gov

- ☐ A request under 37 CFR 1.48 to add an inventor was granted in this application, however, no power of attorney consistent with the power of attorney granted by the originally named inventive entity has been received. Thus, the addition of the inventor has resulted in the loss of power of attorney in the application. See 37 CFR 1.32(e).

- ☑ The power of attorney has not been accepted because the party who is giving power of attorney has not been identified. Power of attorney may only be signed by the applicant for patent (37 CFR 1.42) or the patent owner. A patent owner who was not the applicant must appoint any power of attorney in compliance with 37 CFR 3.71 and 3.73. See 37 CFR 1.32(b)(4).

- ☐ The power of attorney from the inventors has not been accepted because it is a copy from a prior national application for which benefit is claimed and the continuing application names an inventor who was not named as an inventor in the prior application.

- ☐ The power of attorney from the inventors has not been accepted because the power of attorney must be signed by the applicant for patent. See 37 CFR 1.32(b)(4).

- ☑ Any request to correct or update the name of the applicant must include an application data sheet (ADS) in compliance with 37 CFR 1.76 specifying the correct or updated name of the applicant in the applicant information section. Any request to change the applicant after an original applicant has been specified under 37 CFR 1.46(b) must include a new ADS in compliance with 37 CFR 1.76 specifying the applicant in the applicant information section and comply with 37 CFR 3.71 and 3.73. See 37 CFR 1.46(c).

Any inquiries regarding this notice should be directed to the Application Assistance Unit at 571-272-4200.

VH

Application Assistance Unit
571-272-4200

UNITED STATES PATENT AND TRADEMARK OFFICE

UNITED STATES DEPARTMENT OF COMMERCE
United States Patent and Trademark Office
Address: COMMISSIONER FOR PATENTS
P.O. Box 1450
Alexandria, Virginia 22313-1450
www.uspto.gov

APPLICATION NUMBER	FILING OR 371(C) DATE	FIRST NAMED APPLICANT	ATTY. DOCKET NO./TITLE
14/487,947	09/16/2014	Robert Voto	40651-163154

CONFIRMATION NO. 2147

MISCELLANEOUS NOTICE

OC000000083585974

279
MARIA E. KITZ
CLARK HILL PLC
150 NORTH MICHIGAN AVENUE
SUITE 2700
CHICAGO, IL 60601

Date Mailed: 06/13/2016

A communication which cannot be delivered in electronic form has been mailed to the applicant.

PTO/SB/81 (01-09)
Approved for use through 11/30/2011. OMB 0651-0035
U.S. Patent and Trademark Office; U.S. DEPARTMENT OF COMMERCE
Under the Paperwork Reduction Act of 1995, no persons are required to respond to a collection of information unless it displays a valid OMB control number.

POWER OF ATTORNEY OR REVOCATION OF POWER OF ATTORNEY WITH A NEW POWER OF ATTORNEY AND CHANGE OF CORRESPONDENCE ADDRESS

Application Number	14/487,947
Filing Date	09-16-2014
First Named Inventor	Robert M. Voto, et al.
Title	FLEXIBLE MOBILE DEVICE CONNECTIVITY ...
Art Unit	2181
Examiner Name	Ernest Unelus
Attorney Docket Number	DP-322037

I hereby revoke all previous powers of attorney given in the above-identified application.

☒ A Power of Attorney is submitted herewith.

OR

☐ I hereby appoint Practitioner(s) associated with the following Customer Number as my/our attorney(s) or agent(s) to prosecute the application identified above, and to transact all business in the United States Patent and Trademark Office connected therewith: 22851

OR

☐ I hereby appoint Practitioner(s) named below as my/our attorney(s) or agent(s) to prosecute the application identified above, and to transact all business in the United States Patent and Trademark Office connected therewith:

Practitioner(s) Name	Registration Number

Please recognize or change the correspondence address for the above-identified application to:

☒ The address associated with the above-mentioned Customer Number.

OR

☐ The address associated with Customer Number:

OR

☐ Firm or Individual Name					
Address					
City		State		Zip	
Country					
Telephone		Email			

I am the:

☐ Applicant/Inventor.

OR

☒ Assignee of record of the entire interest. See 37 CFR 3.71.
Statement under 37 CFR 3.73(b) (Form PTO/SB/96) submitted herewith or filed on March 17, 2016.

SIGNATURE of Applicant or Assignee of Record

Signature		Date	June 2, 2016
Name	Craig A. Baldwin	Telephone	248-813-1214
Title and Company	Assistant Secretary, Delphi Technologies, Inc.		

NOTE: Signatures of all the inventors or assignees of record of the entire interest or their representative(s) are required. Submit multiple forms if more than one signature is required, see below*.

☒ *Total of 2 forms are submitted.

This collection of information is required by 37 CFR 1.31, 1.32 and 1.33. The information is required to obtain or retain a benefit by the public which is to file (and by the USPTO to process) an application. Confidentiality is governed by 35 U.S.C. 122 and 37 CFR 1.11 and 1.14. This collection is estimated to take 3 minutes to complete, including gathering, preparing, and submitting the completed application form to the USPTO. Time will vary depending upon the individual case. Any comments on the amount of time you require to complete this form and/or suggestions for reducing this burden, should be sent to the Chief Information Officer, U.S. Patent and Trademark Office, U.S. Department of Commerce, P.O. Box 1450, Alexandria, VA 22313-1450. DO NOT SEND FEES OR COMPLETED FORMS TO THIS ADDRESS. SEND TO: **Commissioner for Patents, P.O. Box 1450, Alexandria, VA 22313-1450.**

If you need assistance in completing the form, call 1-800-PTO-9199 and select option 2.

PTO/AIA/96 (08-12)
Approved for use through 01/31/2013. OMB 0651-0031
U.S. Patent and Trademark Office; U.S. DEPARTMENT OF COMMERCE
Under the Paperwork Reduction Act of 1995, no persons are required to respond to a collection of information unless it displays a valid OMB control number.

STATEMENT UNDER 37 CFR 3.73(c)

Applicant/Patent Owner: Robert M. Voto, et al.

Application No./Patent No.: 14/487,947 Filed/Issue Date: 09-16-2014

Titled: FLEXIBLE MOBILE DEVICE CONNECTIVITY TO AUTOMOTIVE SYSTEMS WITH USB HUBS

Delphi Technologies, Inc., a corporation

(Name of Assignee) (Type of Assignee, e.g., corporation, partnership, university, government agency, etc.)

states that, for the patent application/patent identified above, it is (choose one of options 1, 2, 3 or 4 below):

1. [✓] The assignee of the entire right, title, and interest.

2. [ ] An assignee of less than the entire right, title, and interest (check applicable box):

[ ] The extent (by percentage) of its ownership interest is _____%. Additional Statement(s) by the owners holding the balance of the interest must be submitted to account for 100% of the ownership interest.

[ ] There are unspecified percentages of ownership. The other parties, including inventors, who together own the entire right, title and interest are:

Additional Statement(s) by the owner(s) holding the balance of the interest must be submitted to account for the entire right, title, and interest.

3. [ ] The assignee of an undivided interest in the entirety (a complete assignment from one of the joint inventors was made). The other parties, including inventors, who together own the entire right, title, and interest are:

Additional Statement(s) by the owner(s) holding the balance of the interest must be submitted to account for the entire right, title, and interest.

4. [ ] The recipient, via a court proceeding or the like (*e.g.*, bankruptcy, probate), of an undivided interest in the entirety (a complete transfer of ownership interest was made). The certified document(s) showing the transfer is attached.

The interest identified in option 1, 2 or 3 above (not option 4) is evidenced by either (choose one of options A or B below):

A. [ ] An assignment from the inventor(s) of the patent application/patent identified above. The assignment was recorded in the United States Patent and Trademark Office at Reel _____, Frame _____, or for which a copy thereof is attached.

B. [✓] A chain of title from the inventor(s), of the patent application/patent identified above, to the current assignee as follows:

1. From: Robert M. Voto, et al. To: Unwired Technology LLC

The document was recorded in the United States Patent and Trademark Office at Reel 033785, Frame 0399, or for which a copy thereof is attached.

2. From: Unwired Technology LLC To: Delphi Data connectivity US LLC

The document was recorded in the United States Patent and Trademark Office at Reel 038014, Frame 0604, or for which a copy thereof is attached.

This collection of information is required by 37 CFR 3.73(b). The information is required to obtain or retain a benefit by the public which is to file (and by the USPTO to process) an application. Confidentiality is governed by 35 U.S.C. 122 and 37 CFR 1.11 and 1.14. This collection is estimated to take 12 minutes to complete, including gathering, preparing, and submitting the completed application form to the USPTO. Time will vary depending upon the individual case. Any comments on the amount of time you require to complete this form and/or suggestions for reducing this burden, should be sent to the Chief Information Officer, U.S. Patent and Trademark Office, U.S. Department of Commerce, P.O. Box 1450, Alexandria, VA 22313-1450. DO NOT SEND FEES OR COMPLETED FORMS TO THIS ADDRESS. **SEND TO: Commissioner for Patents, P.O. Box 1450, Alexandria, VA 22313-1450.**

If you need assistance in completing the form, call 1-800-PTO-9199 and select option 2.

Under the Paperwork Reduction Act of 1995, no persons are required to respond to a collection of information unless it displays a valid OMB control number.

STATEMENT UNDER 37 CFR 3.73(c)

3. From: Delphi Data Connectivity US LLC To: Delphi Technologies, Inc.

The document was recorded in the United States Patent and Trademark Office at
Reel 038035, Frame 0127, or for which a copy thereof is attached.

4. From: _____ To: _____

The document was recorded in the United States Patent and Trademark Office at
Reel _____, Frame _____, or for which a copy thereof is attached.

5. From: _____ To: _____

The document was recorded in the United States Patent and Trademark Office at
Reel _____, Frame _____, or for which a copy thereof is attached.

6. From: _____ To: _____

The document was recorded in the United States Patent and Trademark Office at
Reel _____, Frame _____, or for which a copy thereof is attached.

☐ Additional documents in the chain of title are listed on a supplemental sheet(s).

☐ As required by 37 CFR 3.73(c)(1)(i), the documentary evidence of the chain of title from the original owner to the assignee was, or concurrently is being, submitted for recordation pursuant to 37 CFR 3.11.

[NOTE: A separate copy (i.e., a true copy of the original assignment document(s)) must be submitted to Assignment Division in accordance with 37 CFR Part 3, to record the assignment in the records of the USPTO. See MPEP 302.08]

The undersigned (whose title is supplied below) is authorized to act on behalf of the assignee.

Signature	June 2, 2016 Date
Craig A. Baldwin Printed or Typed Name	Assistant Secretary 37772 Title or Registration Number

Under the Paperwork Reduction Act of 1995, no persons are required to respond to a collection of information unless it contains a valid OMB control number.

Application Data Sheet 37 CFR 1.76	Attorney Docket Number	DP-322037 ~~40654-463464~~
	Application Number	

Title of Invention	FLEXIBLE MOBILE DEVICE CONNECTIVITY TO AUTOMOTIVE SYSTEMS WITH USB HUBS

The application data sheet is part of the provisional or nonprovisional application for which it is being submitted. The following form contains the bibliographic data arranged in a format specified by the United States Patent and Trademark Office as outlined in 37 CFR 1.76.
This document may be completed electronically and submitted to the Office in electronic format using the Electronic Filing System (EFS) or the document may be printed and included in a paper filed application.

Secrecy Order 37 CFR 5.2:

☐ Portions or all of the application associated with this Application Data Sheet may fall under a Secrecy Order pursuant to 37 CFR 5.2 (Paper filers only. Applications that fail under Secrecy Order may not be filed electronically.)

Inventor Information:

Inventor 1 Remove

Legal Name

Prefix	Given Name	Middle Name	Family Name	Suffix
	Robert		Voto	

Residence Information (Select One) ◉ US Residency ◯ Non US Residency ◯ Active US Military Service

City	Clarkston	State/Province	MI	Country of Residence	US

Mailing Address of Inventor:

Address 1	7054 Oakhurst Ridge		
Address 2			
City	Clarkston	State/Province	MI
Postal Code	46348	Country i	US

Inventor 2 Remove

Legal Name

Prefix	Given Name	Middle Name	Family Name	Suffix
	Shyambabu		Yeda	

Residence Information (Select One) ◉ US Residency ◯ Non US Residency ◯ Active US Military Service

City	Rochester Hills	State/Province	MI	Country of Residence	US

Mailing Address of Inventor:

Address 1	2134 Cattail Circle		
Address 2			
City	Rochester Hills	State/Province	MI
Postal Code	48309	Country i	US

Inventor 3 Remove

Legal Name

Prefix	Given Name	Middle Name	Family Name	Suffix
	Craig		Petku	

Residence Information (Select One) ◉ US Residency ◯ Non US Residency ◯ Active US Military Service

PTO/AIA/14 (11-15)
Approved for use through 04/30/2017. OMB 0651-0032
U.S. Patent and Trademark Office; U.S. DEPARTMENT OF COMMERCE
Under the Paperwork Reduction Act of 1995, no persons are required to respond to a collection of information unless it contains a valid OMB control number.

Application Data Sheet 37 CFR 1.76	Attorney Docket Number	DP-322037 ~~40651-163154~~
	Application Number	

Title of Invention	FLEXIBLE MOBILE DEVICE CONNECTIVITY TO AUTOMOTIVE SYSTEMS WITH USB HUBS

City	Clarkston	State/Province	MI	Country of Residence	US

Mailing Address of Inventor:

Address 1	5188 Iroquois Court		
Address 2			
City	Clarkston	**State/Province**	MI
Postal Code	48348	**Country**	

All Inventors Must Be Listed - Additional Inventor Information blocks may be generated within this form by selecting the **Add** button. Add

Correspondence Information:

Enter either Customer Number or complete the Correspondence Information section below. For further information see 37 CFR 1.33(a).

☐ **An Address is being provided for the correspondence information of this application.**

Customer Number	22851 ~~90279~~		
Email Address	~~ipdocket@clarkhill.com~~	Add Email	Remove Email

Application Information:

Title of the Invention	FLEXIBLE MOBILE DEVICE CONNECTIVITY TO AUTOMOTIVE SYSTEMS WITH USB HUBS		
Attorney Docket Number	DP-322037 ~~40651-163154~~	**Small Entity Status Claimed**	☐
Application Type	Nonprovisional		
Subject Matter	Utility		
Total Number of Drawing Sheets (if any)	8	**Suggested Figure for Publication (if any)**	

Filing By Reference:

Only complete this section when filing an application by reference under 35 U.S.C. 111(c) and 37 CFR 1.57(a). Do not complete this section if application papers including a specification and any drawings are being filed. Any domestic benefit or foreign priority information must be provided in the appropriate section(s) below (i.e., "Domestic Benefit/National Stage Information" and "Foreign Priority Information").

For the purposes of a filing date under 37 CFR 1.53(b), the description and any drawings of the present application are replaced by this reference to the previously filed application, subject to conditions and requirements of 37 CFR 1.57(a).

Application number of the previously filed application	Filing date (YYYY-MM-DD)	Intellectual Property Authority or Country

Publication Information:

☐ Request Early Publication (Fee required at time of Request 37 CFR 1.219)

☐ **Request Not to Publish.** I hereby request that the attached application not be published under 35 U.S.C. 122(b) and certify that the invention disclosed in the attached application **has not and will not** be the subject of an application filed in another country, or under a multilateral international agreement, that requires publication at eighteen months after filing.

Under the Paperwork Reduction Act of 1995, no persons are required to respond to a collection of information unless it contains a valid OMB control number.

Application Data Sheet 37 CFR 1.76	Attorney Docket Number	DP-322037 ~~48651-163164~~
	Application Number	
Title of Invention	FLEXIBLE MOBILE DEVICE CONNECTIVITY TO AUTOMOTIVE SYSTEMS WITH USB HUBS	

Representative Information:

Representative information should be provided for all practitioners having a power of attorney in the application. Providing this information in the Application Data Sheet does not constitute a power of attorney in the application (see 37 CFR 1.32).
Either enter Customer Number or complete the Representative Name section below. If both sections are completed the customer Number will be used for the Representative Information during processing.

Please Select One:	◉ Customer Number	◯ US Patent Practitioner	◯ Limited Recognition (37 CFR 11.9)
Customer Number	22851 ~~68279~~		

Domestic Benefit/National Stage Information:

This section allows for the applicant to either claim benefit under 35 U.S.C. 119(e), 120, 121, 365(c), or 386(c) or indicate National Stage entry from a PCT application. Providing benefit claim information in the Application Data Sheet constitutes the specific reference required by 35 U.S.C. 119(e) or 120, and 37 CFR 1.78.
When referring to the current application, please leave the "Application Number" field blank.

Prior Application Status			Remove
Application Number	Continuity Type	Prior Application Number	Filing or 371(c) Date (YYYY-MM-DD)
	Claims benefit of provisional	61882915	2013-09-26

Additional Domestic Benefit/National Stage Data may be generated within this form by selecting the **Add** button.

Foreign Priority Information:

This section allows for the applicant to claim priority to a foreign application. Providing this information in the application data sheet constitutes the claim for priority as required by 35 U.S.C. 119(b) and 37 CFR 1.55. When priority is claimed to a foreign application that is eligible for retrieval under the priority document exchange program (PDX)[1] the information will be used by the Office to automatically attempt retrieval pursuant to 37 CFR 1.55(i)(1) and (2). Under the PDX program, applicant bears the ultimate responsibility for ensuring that a copy of the foreign application is received by the Office from the participating foreign intellectual property office, or a certified copy of the foreign priority application is filed, within the time period specified in 37 CFR 1.55(g)(1).

			Remove
Application Number	Country[1]	Filing Date (YYYY-MM-DD)	Access Code[1] (if applicable)

Additional Foreign Priority Data may be generated within this form by selecting the **Add** button.

Under the Paperwork Reduction Act of 1995, no persons are required to respond to a collection of information unless it contains a valid OMB control number.

Application Data Sheet 37 CFR 1.76	Attorney Docket Number	DP-322037 ~~40651-163464~~
	Application Number	
Title of Invention	FLEXIBLE MOBILE DEVICE CONNECTIVITY TO AUTOMOTIVE SYSTEMS WITH USB HUBS	

Statement under 37 CFR 1.55 or 1.78 for AIA (First Inventor to File) Transition Applications

☐ This application (1) claims priority to or the benefit of an application filed before March 16, 2013 and (2) also contains, or contained at any time, a claim to a claimed invention that has an effective filing date on or after March 16, 2013.
NOTE: By providing this statement under 37 CFR 1.55 or 1.78, this application, with a filing date on or after March 16, 2013, will be examined under the first inventor to file provisions of the AIA.

Under the Paperwork Reduction Act of 1995, no persons are required to respond to a collection of information unless it contains a valid OMB control number.

Application Data Sheet 37 CFR 1.76	Attorney Docket Number	DP-322037 ~~40654-163454~~
	Application Number	
Title of Invention	FLEXIBLE MOBILE DEVICE CONNECTIVITY TO AUTOMOTIVE SYSTEMS WITH USB HUBS	

Authorization or Opt-Out of Authorization to Permit Access:

When this Application Data Sheet is properly signed and filed with the application, applicant has provided written authority to permit a participating foreign intellectual property (IP) office access to the instant application-as-filed (see paragraph A in subsection 1 below) and the European Patent Office (EPO) access to any search results from the instant application (see paragraph B in subsection 1 below).

Should applicant choose not to provide an authorization identified in subsection 1 below, applicant **must opt-out** of the authorization by checking the corresponding box A or B or both in subsection 2 below.

NOTE: This section of the Application Data Sheet is **ONLY** reviewed and processed with the **INITIAL** filing of an application. After the initial filing of an application, an Application Data Sheet cannot be used to provide or rescind authorization for access by a foreign IP office(s). Instead, Form PTO/SB/39 or PTO/SB/69 must be used as appropriate.

1. Authorization to Permit Access by a Foreign Intellectual Property Office(s)

A. Priority Document Exchange (PDX) - Unless box A in subsection 2 (opt-out of authorization) is checked, the undersigned hereby **grants the USPTO authority** to provide the European Patent Office (EPO), the Japan Patent Office (JPO), the Korean Intellectual Property Office (KIPO), the State Intellectual Property Office of the People's Republic of China (SIPO), the World Intellectual Property Organization (WIPO), and any other foreign intellectual property office participating with the USPTO in a bilateral or multilateral priority document exchange agreement in which a foreign application claiming priority to the instant patent application is filed, access to: (1) the instant patent application-as-filed and its related bibliographic data, (2) any foreign or domestic application to which priority or benefit is claimed by the instant application and its related bibliographic data, and (3) the date of filing of this Authorization. See 37 CFR 1.14(h)(1).

B. Search Results from U.S. Application to EPO - Unless box B in subsection 2 (opt-out of authorization) is checked, the undersigned hereby **grants the USPTO authority** to provide the EPO access to the bibliographic data and search results from the instant patent application when a European patent application claiming priority to the instant patent application is filed. See 37 CFR 1.14(h)(2).

The applicant is reminded that the EPO's Rule 141(1) EPC (European Patent Convention) requires applicants to submit a copy of search results from the instant application without delay in a European patent application that claims priority to the instant application.

2. Opt-Out of Authorizations to Permit Access by a Foreign Intellectual Property Office(s)

☐ A. Applicant **DOES NOT** authorize the USPTO to permit a participating foreign IP office access to the instant application-as-filed. If this box is checked, the USPTO will not be providing a participating foreign IP office with any documents and information identified in subsection 1A above.

☐ B. Applicant **DOES NOT** authorize the USPTO to transmit to the EPO any search results from the instant patent application. If this box is checked, the USPTO will not be providing the EPO with search results from the instant application.

NOTE: Once the application has published or is otherwise publicly available, the USPTO may provide access to the application in accordance with 37 CFR 1.14.

Under the Paperwork Reduction Act of 1995, no persons are required to respond to a collection of information unless it contains a valid OMB control number.

Application Data Sheet 37 CFR 1.76	Attorney Docket Number	DP-322037 ~~40651-163164~~
	Application Number	
Title of Invention	FLEXIBLE MOBILE DEVICE CONNECTIVITY TO AUTOMOTIVE SYSTEMS WITH USB HUBS	

Applicant Information:

Providing assignment information in this section does not substitute for compliance with any requirement of part 3 of Title 37 of CFR to have an assignment recorded by the Office.

Applicant 1

If the applicant is the inventor (or the remaining joint inventor or inventors under 37 CFR 1.45), this section should not be completed. The information to be provided in this section is the name and address of the legal representative who is the applicant under 37 CFR 1.43; or the name and address of the assignee, person to whom the inventor is under an obligation to assign the invention, or person who otherwise shows sufficient proprietary interest in the matter who is the applicant under 37 CFR 1.46. If the applicant is an applicant under 37 CFR 1.46 (assignee, person to whom the inventor is obligated to assign, or person who otherwise shows sufficient proprietary interest) together with one or more joint inventors, then the joint inventor or inventors who are also the applicant should be identified in this section.

Clear

◉ Assignee	○ Legal Representative under 35 U.S.C. 117	○ Joint Inventor
~~◉ Person to whom the inventor is obligated to assign.~~	○ Person who shows sufficient proprietary interest	

If applicant is the legal representative, indicate the authority to file the patent application, the inventor is:

Name of the Deceased or Legally Incapacitated Inventor:

If the Applicant is an Organization check here. ☒

Organization Name	Delphi Technologies, Inc. ~~Unwired Technology LLC~~		
Mailing Address Information For Applicant:			
Address 1	P. O. Box 5052 ~~7600 Jericho Turnpike~~		
Address 2	M/C: 483-400-402		
City	Troy ~~Woodbury~~	**State/Province**	MI ~~NY~~
Country	US	Postal Code	48007-5052 ~~11797~~
Phone Number		Fax Number	
Email Address			

Additional Applicant Data may be generated within this form by selecting the Add button.

Assignee Information including Non-Applicant Assignee Information:

Providing assignment information in this section does not substitute for compliance with any requirement of part 3 of Title 37 of CFR to have an assignment recorded by the Office.

Under the Paperwork Reduction Act of 1995, no persons are required to respond to a collection of information unless it contains a valid OMB control number.

Application Data Sheet 37 CFR 1.76	Attorney Docket Number	DP-322037 ~~40654-163164~~
	Application Number	
Title of Invention	FLEXIBLE MOBILE DEVICE CONNECTIVITY TO AUTOMOTIVE SYSTEMS WITH USB HUBS	

Assignee 1

Complete this section if assignee information, including non-applicant assignee information, is desired to be included on the patent application publication. An assignee-applicant identified in the "Applicant Information" section will appear on the patent application publication as an applicant. For an assignee-applicant, complete this section only if identification as an assignee is also desired on the patent application publication.

If the Assignee or Non-Applicant Assignee is an Organization check here. ☐

Prefix	Given Name	Middle Name	Family Name	Suffix

Mailing Address Information For Assignee including Non-Applicant Assignee:

Address 1			
Address 2			
City		**State/Province**	
Country		Postal Code	
Phone Number		Fax Number	
Email Address			

Additional Assignee or Non-Applicant Assignee Data may be generated within this form by selecting the Add button.

Signature:

NOTE: This Application Data Sheet must be signed in accordance with 37 CFR 1.33(b). **However, if this Application Data Sheet is submitted with the INITIAL filing of the application and either box A or B is not checked in subsection 2 of the "Authorization or Opt-Out of Authorization to Permit Access" section, then this form must also be signed in accordance with 37 CFR 1.14(c).**

This Application Data Sheet must be signed by a patent practitioner if one or more of the applicants is a **juristic entity** (e.g., corporation or association). If the applicant is two or more joint inventors, this form must be signed by a patent practitioner, all joint inventors who are the applicant, or one or more joint inventor-applicants who have been given power of attorney (e.g., see USPTO Form PTO/AIA/81) on behalf of all joint inventor-applicants.

See 37 CFR 1.4(d) for the manner of making signatures and certifications.

Signature	/Robert J. Myers/ ~~/James R. Foley/~~			Date (YYYY-MM-DD)	2016-06-16
First Name	Robert ~~James~~	Last Name	Myers ~~Foley~~	Registration Number	69783 ~~39579~~

Additional Signature may be generated within this form by selecting the Add button.

Under the Paperwork Reduction Act of 1995, no persons are required to respond to a collection of information unless it contains a valid OMB control number.

Application Data Sheet 37 CFR 1.76	Attorney Docket Number	DP-322037 ~~40654-463464~~
	Application Number	
Title of Invention	FLEXIBLE MOBILE DEVICE CONNECTIVITY TO AUTOMOTIVE SYSTEMS WITH USB HUBS	

This collection of information is required by 37 CFR 1.76. The information is required to obtain or retain a benefit by the public which is to file (and by the USPTO to process) an application. Confidentiality is governed by 35 U.S.C. 122 and 37 CFR 1.14. This collection is estimated to take 23 minutes to complete, including gathering, preparing, and submitting the completed application data sheet form to the USPTO. Time will vary depending upon the individual case. Any comments on the amount of time you require to complete this form and/or suggestions for reducing this burden, should be sent to the Chief Information Officer, U.S. Patent and Trademark Office, U.S. Department of Commerce, P.O. Box 1450, Alexandria, VA 22313-1450. DO NOT SEND FEES OR COMPLETED FORMS TO THIS ADDRESS. **SEND TO: Commissioner for Patents, P.O. Box 1450, Alexandria, VA 22313-1450.**

Privacy Act Statement

The Privacy Act of 1974 (P.L. 93-579) requires that you be given certain information in connection with your submission of the attached form related to a patent application or patent. Accordingly, pursuant to the requirements of the Act, please be advised that: (1) the general authority for the collection of this information is 35 U.S.C. 2(b)(2); (2) furnishing of the information solicited is voluntary; and (3) the principal purpose for which the information is used by the U.S. Patent and Trademark Office is to process and/or examine your submission related to a patent application or patent. If you do not furnish the requested information, the U.S. Patent and Trademark Office may not be able to process and/or examine your submission, which may result in termination of proceedings or abandonment of the application or expiration of the patent.

The information provided by you in this form will be subject to the following routine uses:

1. The information on this form will be treated confidentially to the extent allowed under the Freedom of Information Act (5 U.S.C. 552) and the Privacy Act (5 U.S.C. 552a). Records from this system of records may be disclosed to the Department of Justice to determine whether the Freedom of Information Act requires disclosure of these records.

2. A record from this system of records may be disclosed, as a routine use, in the course of presenting evidence to a court, magistrate, or administrative tribunal, including disclosures to opposing counsel in the course of settlement negotiations.

3. A record in this system of records may be disclosed, as a routine use, to a Member of Congress submitting a request involving an individual, to whom the record pertains, when the individual has requested assistance from the Member with respect to the subject matter of the record.

4. A record in this system of records may be disclosed, as a routine use, to a contractor of the Agency having need for the information in order to perform a contract. Recipients of information shall be required to comply with the requirements of the Privacy Act of 1974, as amended, pursuant to 5 U.S.C. 552a(m).

5. A record related to an International Application filed under the Patent Cooperation Treaty in this system of records may be disclosed, as a routine use, to the International Bureau of the World Intellectual Property Organization, pursuant to the Patent CooperationTreaty.

6. A record in this system of records may be disclosed, as a routine use, to another federal agency for purposes of National Security review (35 U.S.C. 181) and for review pursuant to the Atomic Energy Act (42 U.S.C. 218(c)).

7. A record from this system of records may be disclosed, as a routine use, to the Administrator, General Services, or his/her designee, during an inspection of records conducted by GSA as part of that agency's responsibility to recommend improvements in records management practices and programs, under authority of 44 U.S.C. 2904 and 2906. Such disclosure shall be made in accordance with the GSA regulations governing inspection of records for this purpose, and any other relevant (i.e., GSA or Commerce) directive. Such disclosure shall not be used to make determinations about individuals.

8. A record from this system of records may be disclosed, as a routine use, to the public after either publication of the application pursuant to 35 U.S.C. 122(b) or issuance of a patent pursuant to 35 U.S.C. 151. Further, a record may be disclosed, subject to the limitations of 37 CFR 1.14, as a routine use, to the public if the record was filed in an application which became abandoned or in which the proceedings were terminated and which application is referenced by either a published application, an application open to public inspections or an issued patent.

9. A record from this system of records may be disclosed, as a routine use, to a Federal, State, or local law enforcement agency, if the USPTO becomes aware of a violation or potential violation of law or regulation.

Electronic Acknowledgement Receipt

EFS ID:	26095604
Application Number:	14487947
International Application Number:	
Confirmation Number:	2147
Title of Invention:	FLEXIBLE MOBILE DEVICE CONNECTIVITY TO AUTOMOTIVE SYSTEMS WITH USB HUBS
First Named Inventor/Applicant Name:	Robert Voto
Customer Number:	279
Filer:	Lawrence Dean Hazelton/Kandace Powell
Filer Authorized By:	Lawrence Dean Hazelton
Attorney Docket Number:	40651-163154
Receipt Date:	17-JUN-2016
Filing Date:	16-SEP-2014
Time Stamp:	11:10:15
Application Type:	Utility under 35 USC 111(a)

Payment information:

Submitted with Payment	no

File Listing:

Document Number	Document Description	File Name	File Size(Bytes)/ Message Digest	Multi Part /.zip	Pages (if appl.)
1	Transmittal Letter	DP-322037_Trans_Ltr_Corrected_POA_17JN16.pdf	16191 094976273f7d3c8cfe44d8e67c0187ef4bee2507	no	2

Warnings:

Information:

2	Power of Attorney	DP322037_POWER.pdf	100140 82d539f2cbebe5825707f763390a17e932dbf7cd	no	1
Warnings:					
The page size in the PDF is too large. The pages should be 8.5 x 11 or A4. If this PDF is submitted, the pages will be resized upon entry into the Image File Wrapper and may affect subsequent processing					
Information:					
3	Assignee showing of ownership per 37 CFR 3.73	DP322037_373c_Statement.pdf	108824 4b7e9787ea581b24813ea59d09d612e0d07b8b86	no	2
Warnings:					
The page size in the PDF is too large. The pages should be 8.5 x 11 or A4. If this PDF is submitted, the pages will be resized upon entry into the Image File Wrapper and may affect subsequent processing					
Information:					
4	Application Data Sheet	DP322037_ADS_UPDATED_16JUN16.pdf	418043 f0a79df307649704f350be8c906084d21a746cbd	no	9
Warnings:					
Information:					
This is not an USPTO supplied ADS fillable form					
The page size in the PDF is too large. The pages should be 8.5 x 11 or A4. If this PDF is submitted, the pages will be resized upon entry into the Image File Wrapper and may affect subsequent processing					
			Total Files Size (in bytes):	643198	

This Acknowledgement Receipt evidences receipt on the noted date by the USPTO of the indicated documents, characterized by the applicant, and including page counts, where applicable. It serves as evidence of receipt similar to a Post Card, as described in MPEP 503.

<u>New Applications Under 35 U.S.C. 111</u>
If a new application is being filed and the application includes the necessary components for a filing date (see 37 CFR 1.53(b)-(d) and MPEP 506), a Filing Receipt (37 CFR 1.54) will be issued in due course and the date shown on this Acknowledgement Receipt will establish the filing date of the application.

<u>National Stage of an International Application under 35 U.S.C. 371</u>
If a timely submission to enter the national stage of an international application is compliant with the conditions of 35 U.S.C. 371 and other applicable requirements a Form PCT/DO/EO/903 indicating acceptance of the application as a national stage submission under 35 U.S.C. 371 will be issued in addition to the Filing Receipt, in due course.

<u>New International Application Filed with the USPTO as a Receiving Office</u>
If a new international application is being filed and the international application includes the necessary components for an international filing date (see PCT Article 11 and MPEP 1810), a Notification of the International Application Number and of the International Filing Date (Form PCT/RO/105) will be issued in due course, subject to prescriptions concerning national security, and the date shown on this Acknowledgement Receipt will establish the international filing date of the application.

IN THE UNITED STATES PATENT AND TRADEMARK OFFICE

Appl. No.	:	14/487,947	Confirmation No. 2147
Applicant	:	Unwired Technology LLC	
Inventors	:	Robert Voto, et al.	
Filed	:	09/16/2014	
TC/AU	:	2181	
Examiner	:	Ernest Unelus	
Docket No.	:	DP-322037 (formerly 40651-163154)	
Title	:	Flexible Mobile Device Connectivity to Automotive Systems with USB Hubs	

RESPONSE TO DENIAL OF REQUEST FOR POWER OF ATTORNEY

Commissioner for Patents
P. O. Box 1450
Alexandria, VA 22313-1450

Dear Sir:

This is sent in response to the "Denial of Request For Power of Attorney" for the subject patent application mailed June 10, 2016.

Enclosed are the following items for filing with the subject patent:

1. Revocation of Power of Attorney with a New Power of Attorney (PTO Form PTO/SB/81); and

2. Statement under 37 CFR §3.73(c).

3. Amended Application Data Sheet.

The Commissioner is hereby authorized to charge any fees associated with this communication and/or credit any overpayments to Delphi Technologies, Inc., Deposit Account No. 50-0831.

Respectfully submitted,

/Robert J. Myers/

Robert J. Myers
Reg. No. 69,783
Delphi Technologies, Inc.
Legal Staff – M/C 483-400-402
P.O. Box 5052
Troy, Michigan 48007-5052
(248) 813-2512
bob.myers@delphi.com

UNITED STATES PATENT AND TRADEMARK OFFICE

UNITED STATES DEPARTMENT OF COMMERCE
United States Patent and Trademark Office
Address: COMMISSIONER FOR PATENTS
P.O. Box 1450
Alexandria, Virginia 22313-1450
www.uspto.gov

NOTICE OF ALLOWANCE AND FEE(S) DUE

279 7590 06/20/2016
MARIA E. KITZ
CLARK HILL PLC
150 NORTH MICHIGAN AVENUE
SUITE 2700
CHICAGO, IL 60601

EXAMINER
UNELUS, ERNEST

ART UNIT	PAPER NUMBER
2181	

DATE MAILED: 06/20/2016

APPLICATION NO.	FILING DATE	FIRST NAMED INVENTOR	ATTORNEY DOCKET NO.	CONFIRMATION NO.
14/487,947	09/16/2014	Robert Voto	40651-163154	2147

TITLE OF INVENTION: FLEXIBLE MOBILE DEVICE CONNECTIVITY TO AUTOMOTIVE SYSTEMS WITH USB HUBS

APPLN. TYPE	ENTITY STATUS	ISSUE FEE DUE	PUBLICATION FEE DUE	PREV. PAID ISSUE FEE	TOTAL FEE(S) DUE	DATE DUE
nonprovisional	SMALL	$480	$0	$0	$480	09/20/2016

THE APPLICATION IDENTIFIED ABOVE HAS BEEN EXAMINED AND IS ALLOWED FOR ISSUANCE AS A PATENT. PROSECUTION ON THE MERITS IS CLOSED. THIS NOTICE OF ALLOWANCE IS NOT A GRANT OF PATENT RIGHTS. THIS APPLICATION IS SUBJECT TO WITHDRAWAL FROM ISSUE AT THE INITIATIVE OF THE OFFICE OR UPON PETITION BY THE APPLICANT. SEE 37 CFR 1.313 AND MPEP 1308.

THE ISSUE FEE AND PUBLICATION FEE (IF REQUIRED) MUST BE PAID WITHIN THREE MONTHS FROM THE MAILING DATE OF THIS NOTICE OR THIS APPLICATION SHALL BE REGARDED AS ABANDONED. THIS STATUTORY PERIOD CANNOT BE EXTENDED. SEE 35 U.S.C. 151. THE ISSUE FEE DUE INDICATED ABOVE DOES NOT REFLECT A CREDIT FOR ANY PREVIOUSLY PAID ISSUE FEE IN THIS APPLICATION. IF AN ISSUE FEE HAS PREVIOUSLY BEEN PAID IN THIS APPLICATION (AS SHOWN ABOVE), THE RETURN OF PART B OF THIS FORM WILL BE CONSIDERED A REQUEST TO REAPPLY THE PREVIOUSLY PAID ISSUE FEE TOWARD THE ISSUE FEE NOW DUE.

HOW TO REPLY TO THIS NOTICE:

I. Review the ENTITY STATUS shown above. If the ENTITY STATUS is shown as SMALL or MICRO, verify whether entitlement to that entity status still applies.

If the ENTITY STATUS is the same as shown above, pay the TOTAL FEE(S) DUE shown above.

If the ENTITY STATUS is changed from that shown above, on PART B - FEE(S) TRANSMITTAL, complete section number 5 titled "Change in Entity Status (from status indicated above)".

For purposes of this notice, small entity fees are 1/2 the amount of undiscounted fees, and micro entity fees are 1/2 the amount of small entity fees.

II. PART B - FEE(S) TRANSMITTAL, or its equivalent, must be completed and returned to the United States Patent and Trademark Office (USPTO) with your ISSUE FEE and PUBLICATION FEE (if required). If you are charging the fee(s) to your deposit account, section "4b" of Part B - Fee(s) Transmittal should be completed and an extra copy of the form should be submitted. If an equivalent of Part B is filed, a request to reapply a previously paid issue fee must be clearly made, and delays in processing may occur due to the difficulty in recognizing the paper as an equivalent of Part B.

III. All communications regarding this application must give the application number. Please direct all communications prior to issuance to Mail Stop ISSUE FEE unless advised to the contrary.

IMPORTANT REMINDER: Utility patents issuing on applications filed on or after Dec. 12, 1980 may require payment of maintenance fees. It is patentee's responsibility to ensure timely payment of maintenance fees when due.

PTOL-85 (Rev. 02/11)

Microchip Ex. 1002, p. 185
Microchip v. Aptiv
IPR2024-00495

PART B - FEE(S) TRANSMITTAL

Complete and send this form, together with applicable fee(s), to: Mail **Mail Stop ISSUE FEE**
Commissioner for Patents
P.O. Box 1450
Alexandria, Virginia 22313-1450
or Fax (571)-273-2885

INSTRUCTIONS: This form should be used for transmitting the ISSUE FEE and PUBLICATION FEE (if required). Blocks 1 through 5 should be completed where appropriate. All further correspondence including the Patent, advance orders and notification of maintenance fees will be mailed to the current correspondence address as indicated unless corrected below or directed otherwise in Block 1, by (a) specifying a new correspondence address; and/or (b) indicating a separate "FEE ADDRESS" for maintenance fee notifications.

CURRENT CORRESPONDENCE ADDRESS (Note: Use Block 1 for any change of address)

279 7590 06/20/2016
MARIA E. KITZ
CLARK HILL PLC
150 NORTH MICHIGAN AVENUE
SUITE 2700
CHICAGO, IL 60601

Note: A certificate of mailing can only be used for domestic mailings of the Fee(s) Transmittal. This certificate cannot be used for any other accompanying papers. Each additional paper, such as an assignment or formal drawing, must have its own certificate of mailing or transmission.

Certificate of Mailing or Transmission
I hereby certify that this Fee(s) Transmittal is being deposited with the United States Postal Service with sufficient postage for first class mail in an envelope addressed to the Mail Stop ISSUE FEE address above, or being facsimile transmitted to the USPTO (571) 273-2885, on the date indicated below.

(Depositor's name)
(Signature)
(Date)

APPLICATION NO.	FILING DATE	FIRST NAMED INVENTOR	ATTORNEY DOCKET NO.	CONFIRMATION NO.
14/487,947	09/16/2014	Robert Voto	40651-163154	2147

TITLE OF INVENTION: FLEXIBLE MOBILE DEVICE CONNECTIVITY TO AUTOMOTIVE SYSTEMS WITH USB HUBS

APPLN. TYPE	ENTITY STATUS	ISSUE FEE DUE	PUBLICATION FEE DUE	PREV. PAID ISSUE FEE	TOTAL FEE(S) DUE	DATE DUE
nonprovisional	SMALL	$480	$0	$0	$480	09/20/2016

EXAMINER	ART UNIT	CLASS-SUBCLASS
UNELUS, ERNEST	2181	710-014000

1. Change of correspondence address or indication of "Fee Address" (37 CFR 1.363).
❑ Change of correspondence address (or Change of Correspondence Address form PTO/SB/122) attached.
❑ "Fee Address" indication (or "Fee Address" Indication form PTO/SB/47; Rev 03-02 or more recent) attached. **Use of a Customer Number is required.**

2. For printing on the patent front page, list
(1) The names of up to 3 registered patent attorneys or agents OR, alternatively,
(2) The name of a single firm (having as a member a registered attorney or agent) and the names of up to 2 registered patent attorneys or agents. If no name is listed, no name will be printed.
1_____
2_____
3_____

3. ASSIGNEE NAME AND RESIDENCE DATA TO BE PRINTED ON THE PATENT (print or type)
PLEASE NOTE: Unless an assignee is identified below, no assignee data will appear on the patent. If an assignee is identified below, the document has been filed for recordation as set forth in 37 CFR 3.11. Completion of this form is NOT a substitute for filing an assignment.
(A) NAME OF ASSIGNEE (B) RESIDENCE: (CITY and STATE OR COUNTRY)

Please check the appropriate assignee category or categories (will not be printed on the patent) : ❑ Individual ❑ Corporation or other private group entity ❑ Government

4a. The following fee(s) are submitted:
❑ Issue Fee
❑ Publication Fee (No small entity discount permitted)
❑ Advance Order - # of Copies _____

4b. Payment of Fee(s): **(Please first reapply any previously paid issue fee shown above)**
❑ A check is enclosed.
❑ Payment by credit card. Form PTO-2038 is attached.
❑ The director is hereby authorized to charge the required fee(s), any deficiency, or credits any overpayment, to Deposit Account Number _____ (enclose an extra copy of this form).

5. **Change in Entity Status** (from status indicated above)
❑ Applicant certifying micro entity status. See 37 CFR 1.29 — NOTE: Absent a valid certification of Micro Entity Status (see forms PTO/SB/15A and 15B), issue fee payment in the micro entity amount will not be accepted at the risk of application abandonment.
❑ Applicant asserting small entity status. See 37 CFR 1.27 — NOTE: If the application was previously under micro entity status, checking this box will be taken to be a notification of loss of entitlement to micro entity status.
❑ Applicant changing to regular undiscounted fee status. — NOTE: Checking this box will be taken to be a notification of loss of entitlement to small or micro entity status, as applicable.

NOTE: This form must be signed in accordance with 37 CFR 1.31 and 1.33. See 37 CFR 1.4 for signature requirements and certifications.

Authorized Signature _____ Date _____
Typed or printed name _____ Registration No. _____

PTOL-85 Part B (10-13) Approved for use through 10/31/2013. OMB 0651-0033 U.S. Patent and Trademark Office; U.S. DEPARTMENT OF COMMERCE

Microchip Ex. 1002, p. 186
Microchip v. Aptiv
IPR2024-00495

UNITED STATES PATENT AND TRADEMARK OFFICE

UNITED STATES DEPARTMENT OF COMMERCE
United States Patent and Trademark Office
Address: COMMISSIONER FOR PATENTS
P.O. Box 1450
Alexandria, Virginia 22313-1450
www.uspto.gov

APPLICATION NO.	FILING DATE	FIRST NAMED INVENTOR	ATTORNEY DOCKET NO.	CONFIRMATION NO.
14/487,947	09/16/2014	Robert Voto	40651-163154	2147

279 7590 06/20/2016
MARIA E. KITZ
CLARK HILL PLC
150 NORTH MICHIGAN AVENUE
SUITE 2700
CHICAGO, IL 60601

EXAMINER
UNELUS, ERNEST

ART UNIT	PAPER NUMBER
2181	

DATE MAILED: 06/20/2016

Determination of Patent Term Adjustment under 35 U.S.C. 154 (b)
(Applications filed on or after May 29, 2000)

The Office has discontinued providing a Patent Term Adjustment (PTA) calculation with the Notice of Allowance.

Section 1(h)(2) of the AIA Technical Corrections Act amended 35 U.S.C. 154(b)(3)(B)(i) to eliminate the requirement that the Office provide a patent term adjustment determination with the notice of allowance. See Revisions to Patent Term Adjustment, 78 Fed. Reg. 19416, 19417 (Apr. 1, 2013). Therefore, the Office is no longer providing an initial patent term adjustment determination with the notice of allowance. The Office will continue to provide a patent term adjustment determination with the Issue Notification Letter that is mailed to applicant approximately three weeks prior to the issue date of the patent, and will include the patent term adjustment on the patent. Any request for reconsideration of the patent term adjustment determination (or reinstatement of patent term adjustment) should follow the process outlined in 37 CFR 1.705.

Any questions regarding the Patent Term Extension or Adjustment determination should be directed to the Office of Patent Legal Administration at (571)-272-7702. Questions relating to issue and publication fee payments should be directed to the Customer Service Center of the Office of Patent Publication at 1-(888)-786-0101 or (571)-272-4200.

PTOL-85 (Rev. 02/11)

Microchip Ex. 1002, p. 187
Microchip v. Aptiv
IPR2024-00495

OMB Clearance and PRA Burden Statement for PTOL-85 Part B

The Paperwork Reduction Act (PRA) of 1995 requires Federal agencies to obtain Office of Management and Budget approval before requesting most types of information from the public. When OMB approves an agency request to collect information from the public, OMB (i) provides a valid OMB Control Number and expiration date for the agency to display on the instrument that will be used to collect the information and (ii) requires the agency to inform the public about the OMB Control Number's legal significance in accordance with 5 CFR 1320.5(b).

The information collected by PTOL-85 Part B is required by 37 CFR 1.311. The information is required to obtain or retain a benefit by the public which is to file (and by the USPTO to process) an application. Confidentiality is governed by 35 U.S.C. 122 and 37 CFR 1.14. This collection is estimated to take 12 minutes to complete, including gathering, preparing, and submitting the completed application form to the USPTO. Time will vary depending upon the individual case. Any comments on the amount of time you require to complete this form and/or suggestions for reducing this burden, should be sent to the Chief Information Officer, U.S. Patent and Trademark Office, U.S. Department of Commerce, P.O. Box 1450, Alexandria, Virginia 22313-1450. DO NOT SEND FEES OR COMPLETED FORMS TO THIS ADDRESS. SEND TO: Commissioner for Patents, P.O. Box 1450, Alexandria, Virginia 22313-1450. Under the Paperwork Reduction Act of 1995, no persons are required to respond to a collection of information unless it displays a valid OMB control number.

Privacy Act Statement

The Privacy Act of 1974 (P.L. 93-579) requires that you be given certain information in connection with your submission of the attached form related to a patent application or patent. Accordingly, pursuant to the requirements of the Act, please be advised that: (1) the general authority for the collection of this information is 35 U.S.C. 2(b)(2); (2) furnishing of the information solicited is voluntary; and (3) the principal purpose for which the information is used by the U.S. Patent and Trademark Office is to process and/or examine your submission related to a patent application or patent. If you do not furnish the requested information, the U.S. Patent and Trademark Office may not be able to process and/or examine your submission, which may result in termination of proceedings or abandonment of the application or expiration of the patent.

The information provided by you in this form will be subject to the following routine uses:

1. The information on this form will be treated confidentially to the extent allowed under the Freedom of Information Act (5 U.S.C. 552) and the Privacy Act (5 U.S.C 552a). Records from this system of records may be disclosed to the Department of Justice to determine whether disclosure of these records is required by the Freedom of Information Act.
2. A record from this system of records may be disclosed, as a routine use, in the course of presenting evidence to a court, magistrate, or administrative tribunal, including disclosures to opposing counsel in the course of settlement negotiations.
3. A record in this system of records may be disclosed, as a routine use, to a Member of Congress submitting a request involving an individual, to whom the record pertains, when the individual has requested assistance from the Member with respect to the subject matter of the record.
4. A record in this system of records may be disclosed, as a routine use, to a contractor of the Agency having need for the information in order to perform a contract. Recipients of information shall be required to comply with the requirements of the Privacy Act of 1974, as amended, pursuant to 5 U.S.C. 552a(m).
5. A record related to an International Application filed under the Patent Cooperation Treaty in this system of records may be disclosed, as a routine use, to the International Bureau of the World Intellectual Property Organization, pursuant to the Patent Cooperation Treaty.
6. A record in this system of records may be disclosed, as a routine use, to another federal agency for purposes of National Security review (35 U.S.C. 181) and for review pursuant to the Atomic Energy Act (42 U.S.C. 218(c)).
7. A record from this system of records may be disclosed, as a routine use, to the Administrator, General Services, or his/her designee, during an inspection of records conducted by GSA as part of that agency's responsibility to recommend improvements in records management practices and programs, under authority of 44 U.S.C. 2904 and 2906. Such disclosure shall be made in accordance with the GSA regulations governing inspection of records for this purpose, and any other relevant (i.e., GSA or Commerce) directive. Such disclosure shall not be used to make determinations about individuals.
8. A record from this system of records may be disclosed, as a routine use, to the public after either publication of the application pursuant to 35 U.S.C. 122(b) or issuance of a patent pursuant to 35 U.S.C. 151. Further, a record may be disclosed, subject to the limitations of 37 CFR 1.14, as a routine use, to the public if the record was filed in an application which became abandoned or in which the proceedings were terminated and which application is referenced by either a published application, an application open to public inspection or an issued patent.
9. A record from this system of records may be disclosed, as a routine use, to a Federal, State, or local law enforcement agency, if the USPTO becomes aware of a violation or potential violation of law or regulation.

Notice of Allowability	Application No. 14/487,947	Applicant(s) VOTO ET AL.	
	Examiner ERNEST UNELUS	Art Unit 2181	AIA (First Inventor to File) Status Yes

-- The MAILING DATE of this communication appears on the cover sheet with the correspondence address--

All claims being allowable, PROSECUTION ON THE MERITS IS (OR REMAINS) CLOSED in this application. If not included herewith (or previously mailed), a Notice of Allowance (PTOL-85) or other appropriate communication will be mailed in due course. **THIS NOTICE OF ALLOWABILITY IS NOT A GRANT OF PATENT RIGHTS.** This application is subject to withdrawal from issue at the initiative of the Office or upon petition by the applicant. See 37 CFR 1.313 and MPEP 1308.

1. ☒ This communication is responsive to *Examiner's amendment on 06/09/2016*.
   ☐ A declaration(s)/affidavit(s) under **37 CFR 1.130(b)** was/were filed on_____.
2. ☐ An election was made by the applicant in response to a restriction requirement set forth during the interview on _____; the restriction requirement and election have been incorporated into this action.
3. ☒ The allowed claim(s) is/are *1-5,7-11 and 17-23*. As a result of the allowed claim(s), you may be eligible to benefit from the **Patent Prosecution Highway** program at a participating intellectual property office for the corresponding application. For more information, please see http://www.uspto.gov/patents/init_events/pph/index.jsp or send an inquiry to PPHfeedback@uspto.gov .
4. ☐ Acknowledgment is made of a claim for foreign priority under 35 U.S.C. § 119(a)-(d) or (f).

   Certified copies:

   a) ☐ All b) ☐ Some *c) ☐ None of the:
   1. ☐ Certified copies of the priority documents have been received.
   2. ☐ Certified copies of the priority documents have been received in Application No. _____ .
   3. ☐ Copies of the certified copies of the priority documents have been received in this national stage application from the International Bureau (PCT Rule 17.2(a)).

   * Certified copies not received: _____.

Applicant has THREE MONTHS FROM THE "MAILING DATE" of this communication to file a reply complying with the requirements noted below. Failure to timely comply will result in ABANDONMENT of this application.
THIS THREE-MONTH PERIOD IS NOT EXTENDABLE.

5. ☐ CORRECTED DRAWINGS (as "replacement sheets") must be submitted.
   ☐ including changes required by the attached Examiner's Amendment / Comment or in the Office action of Paper No./Mail Date _____.

   Identifying indicia such as the application number (see 37 CFR 1.84(c)) should be written on the drawings in the front (not the back) of each sheet. Replacement sheet(s) should be labeled as such in the header according to 37 CFR 1.121(d).
6. ☐ DEPOSIT OF and/or INFORMATION about the deposit of BIOLOGICAL MATERIAL must be submitted. Note the attached Examiner's comment regarding REQUIREMENT FOR THE DEPOSIT OF BIOLOGICAL MATERIAL.

Attachment(s)

1. ☐ Notice of References Cited (PTO-892)
2. ☐ Information Disclosure Statements (PTO/SB/08), Paper No./Mail Date _____
3. ☐ Examiner's Comment Regarding Requirement for Deposit of Biological Material
4. ☒ Interview Summary (PTO-413), Paper No./Mail Date *20160609* .
5. ☒ Examiner's Amendment/Comment
6. ☒ Examiner's Statement of Reasons for Allowance
7. ☐ Other _____.

/ERNEST UNELUS/
Primary Examiner, Art Unit 2181

Microchip Ex. 1002, p. 189
Microchip v. Aptiv
IPR2024-00495

DETAILED ACTION

The present application, filed on or after March 16, 2013, is being examined under the first inventor to file provisions of the AIA.

EXAMINER'S AMENDMENT

An examiner's amendment to the record appears below. Should the changes and/or additions be unacceptable to applicant, an amendment may be filed as provided by 37 CFR 1.312. To ensure consideration of such an amendment, it MUST be submitted no later than the payment of the issue fee.

Authorization for this examiner's amendment was given in a telephone interview with Mr. Robert J. Myers (Reg. No. 69,783) on June 8, 2016. The examiner proposed amendments to better place the application in condition for allowance, particularly adding the limitation that prior arts fail to teach. Mr. Myers agreed.

The application has been amended as follows:

Listing of Claims:

1. (Currently amended) A system disposed within a vehicle, comprising:

an embedded Universal Serial Bus (USB) Host system;

a USB Hub having a plurality of USB Ports and interconnected to the embedded USB Host system, said USB Hub configured to simultaneously broadcast data from the embedded USB Host system to each USB Port in the plurality of USB Ports and to transmit data from each USB Port to the embedded USB Host system;

a USB Bridge interconnected to the USB Hub[[;]] and configured to connect the embedded USB Host system to a second USB Host; and

a USB routing switch interconnected to the USB Bridge, the USB Hub, and [[a]] the plurality of USB ~~Port~~ Ports, wherein the USB routing switch is configured to connect ~~the~~ a first USB Port of the plurality of USB Ports to the USB Hub through the USB Bridge when a consumer device connected to the USB Port is ~~acting as a USB Host~~ the second USB Host and is configured to initiate bidirectional communication with the embedded USB Host, and wherein the USB routing switch is configured to connect the first USB Port directly to the USB Hub when the consumer device connected to the first USB Port is ~~acting as a~~ configured to only respond to communication from the embedded USB ~~Device~~ Host, thereby rendering the consumer device compatible with the embedded USB Host system.

2. (Currently amended) A system as recited in claim 1, wherein the USB routing switch is configured to connect [[a]] the first USB Port ~~of a plurality of USB Ports~~ to the USB Hub through the USB Bridge when a first consumer device connected to the first USB Port is ~~acting as a~~ the second USB Host, and wherein the USB routing switch is configured to simultaneously connect a second USB Port of the plurality of USB Ports directly to the USB Hub when a second consumer device connected to the second USB Port is ~~acting as a~~ the USB Device, thereby rendering the first and second consumer devices compatible to function simultaneously with the embedded USB Host system.

3. (Currently amended) A system as recited in claim 1, wherein the system is configured to recognize whether the consumer device connected to the USB Port is ~~configured to act as a~~ the second USB Host or ~~as a~~ the USB Device and control the USB routing switch accordingly.

4. (Previously presented) A system as recited in claim 7, wherein the system is configured to dynamically switch operation of USB Ports connected to the USB Hub Module between USB Device mode and USB Host mode.

5. (Previously presented) A system as recited in claim 1, wherein the system further comprises an infotainment system containing the embedded USB Host system.

6. (Cancelled)

7. (Previously presented) A system as recited in claim 1, wherein the USB Hub, the USB Bridge, and the USB routing switch system are disposed within a USB Hub Module.

8. (Currently amended) A system as recited in claim 7, wherein the USB Hub Module is connected to the embedded USB Host system and [[a]] the plurality of USB Ports connected to a plurality of consumer devices.

9. (Currently amended) A system as recited in claim 8, wherein the USB routing switch is configured to connect each consumer device of the plurality of consumer devices to either the USB Bridge or the USB Hub based on whether each consumer device attached to each USB Port in the plurality of USB Ports is ~~configured to act as a~~ the USB Host or [[a]] the USB Device.

10. (Previously presented) A system as recited in claim 1, wherein the USB routing switch comprises a plurality of USB analog multiplexing switches.

11. (Previously presented) A system as recited in claim 1, wherein the USB Bridge is configured to control the USB routing switch.

12. – 16. (Cancelled)

17. (Previously presented) A system as recited in claim 23, wherein the USB Hub, the USB Bridge, and the USB routing switch system are integrated in an Integrated Circuit (IC).

18. (Previously presented) A system as recited in claim 1, wherein the USB Bridge comprises a bridge controller as well as endpoint buffers.

19. (Previously presented) A system as recited in claim 18, wherein the endpoint buffers are configured to support a USB data connection pipe between an infotainment system and the consumer device.

20. (Currently amended) A system as recited in claim 1, wherein the system further comprises an infotainment system with ~~a single~~ the embedded USB ~~host~~ Host which is electrically connected to the USB Hub via a single USB data connection.

21. (Currently amended) A system as recited in claim 1, wherein the system further comprises an infotainment system, wherein the system is configured to support simultaneous active USB data connections between the infotainment system and multiple consumer devices, at least one of which is [[a]] the second USB Host while others are USB Devices.

22. (Currently amended) A system as recited in claim 1, wherein the system further comprises an infotainment system, wherein the system is configured to support simultaneous active USB data connections between the infotainment system and some combination of embedded devices and consumer devices that are USB Devices along with at least one that is [[a]] the second USB Host.

23. (Previously presented) A system as recited in claim 1, wherein the USB routing switch comprises digital routing logic.

ALLOWABLE SUBJECT MATTER

The primary reason for allowance of claim 1 in the instant application is that prior arts don't teach a peripheral device to communicate with a USB hub bi-directionally in a first mode and to communicate with the hub only uni-directionally in a second mode and said USB Hub configured to simultaneously broadcast data from an embedded USB Host system to a plurality of USB Ports on the hub and to transmit data from each USB Port to the embedded USB Host system.

The remaining claims 2-5, 7-11 and 17-23 are allowed by virtue of their dependencies on the independent claim. Hence, the examiner has allowed claims 1-5, 7-11 and 17-23.

Any comments considered necessary by applicant must be submitted no later than the payment of the issue fee and, to avoid processing delays, should preferably accompany the issue

fee. Such submissions should be clearly labeled "Comments on Statement of Reasons for Allowance."

CLOSING COMMENTS

Conclusion

a. STATUS OF CLAIMS IN THE APPLICATION

The following is a summary of the treatment and status of all claims in the application as recommended by **M.P.E.P. 707.07(i)**:

a(1) CLAIMS ALOWED IN THE APPLICATION

Per the instant office action, claims 1-5, 7-11 and 17-23 have been allowed.

b. DIRECTION OF FUTURE CORRESPONDENCES

Any inquiry concerning this communication or earlier communications from the examiner should be directed to Ernest Unelus whose telephone number is (571) 272-8596. The examiner can normally be reached on Monday to Friday 9:00 AM to 5:00 PM.

IMPORTANT NOTE

If attempts to reach the above noted Examiner by telephone are unsuccessful, the Examiner's supervisor, Mr. Idriss Alrobaye, can be reached at the following telephone number: Area Code (571) 270-1023.

The fax phone number for the organization where this application or proceeding is assigned is 571-273-8300. Information regarding the status of an application may be obtained from the Patent Application Information Retrieval (PAIR) system. Status

information for published applications may be obtained from either Private PAIR or Public PAIR. Status information for unpublished applications is available through Private PAIR only. For more information about the PMR system, see her//pair-direct.uspto.gov. Should you have questions on access to the Private PAIR system, contact the Electronic Business Center (EBC) at 866-217- 91 97 (toll-free).

/Ernest Unelus/
Primary Examiner
Art Unit 2181

Examiner-Initiated Interview Summary	Application No.	Applicant(s)	
	14/487,947	VOTO ET AL.	
	Examiner	Art Unit	
	ERNEST UNELUS	2181	

All participants (applicant, applicant's representative, PTO personnel):

(1) *ERNEST UNELUS*. (3)_____.

(2) *Robert J. Myers (Reg. No. 69,783)*. (4)_____.

Date of Interview: *08 June 2016*.

Type: ☒ Telephonic ☐ Video Conference
☐ Personal [copy given to: ☐ applicant ☐ applicant's representative]

Exhibit shown or demonstration conducted: ☐ Yes ☒ No.
If Yes, brief description: _____.

Issues Discussed ☐101 ☐112 ☒102 ☐103 ☐Others
(For each of the checked box(es) above, please describe below the issue and detailed description of the discussion)

Claim(s) discussed: *1*.

Identification of prior art discussed: *2006/0227759 to Bohm*.

Substance of Interview
(For each issue discussed, provide a detailed description and indicate if agreement was reached. Some topics may include: identification or clarification of a reference or a portion thereof, claim interpretation, proposed amendments, arguments of any applied references etc...)

The primary reason for allowance of claim 1 in the instant application is that prior arts don't teach a peripheral device to communicate with a USB hub bi-directionally in a first mode and to communicate with the hub only uni-directionally in a second mode and said USB Hub configured to simultaneously broadcast data from an embedded USB Host system to a plurality of USB Ports on the hub and to transmit data from each USB Port to the embedded USB Host system..

Applicant recordation instructions: It is not necessary for applicant to provide a separate record of the substance of interview.

Examiner recordation instructions: Examiners must summarize the substance of any interview of record. A complete and proper recordation of the substance of an interview should include the items listed in MPEP 713.04 for complete and proper recordation including the identification of the general thrust of each argument or issue discussed, a general indication of any other pertinent matters discussed regarding patentability and the general results or outcome of the interview, to include an indication as to whether or not agreement was reached on the issues raised.

☐ Attachment

/ERNEST UNELUS/
Primary Examiner, Art Unit 2181

Microchip Ex. 1002, p. 197
Microchip v. Aptiv
IPR2024-00495

Search Notes	Application/Control No.	Applicant(s)/Patent Under Reexamination
	14487947	VOTO ET AL.
	Examiner	**Art Unit**
	ERNEST UNELUS	2181

CPC- SEARCHED

Symbol	Date	Examiner
G06F 13/385, G06F 2213/3812	8/13/2015	E.U
G06F 13/4022	2/1/2016	E.U
G06F 13/4022, G06F 13/4045, G06F 13/385, G06F 2213/4004, G06F 2213/0042	6/9/2016	E.U

CPC COMBINATION SETS - SEARCHED

Symbol	Date	Examiner

US CLASSIFICATION SEARCHED

Class	Subclass	Date	Examiner
710	15	8/13/2015	E.U

SEARCH NOTES

Search Notes	Date	Examiner
EAST search: US-PGPUB; USPAT; USOCR; EPO; JPO; DERWENT	8/13/2015	E.U
Inventor search utilizing eDAN and EAST	8/13/2015	E.U
Limited text search of 710/14, 15 and CPC search of G06F 13/385, G06F 2213/3812	8/13/2015	E.U
EAST search: US-PGPUB; USPAT; USOCR; EPO; JPO; DERWENT	2/1/2016	E.U
Inventor search utilizing eDAN and EAST	2/1/2016	E.U
CPC search of G06F 13/4022	2/1/2016	E.U
EAST search: US-PGPUB; USPAT; USOCR; EPO; JPO; DERWENT	6/9/2016	E.U
Inventor search utilizing eDAN and EAST	6/9/2016	E.U
CPC search of G06F 13/4022, G06F 13/4045, G06F 13/385, G06F 2213/4004, G06F 2213/0042	6/9/2016	E.U

INTERFERENCE SEARCH

Microchip Ex. 1002, p. 198
Microchip v. Aptiv
IPR2024-00495

US Class/ CPC Symbol	US Subclass / CPC Group	Date	Examiner
G06F	13/4022	6/9/2016	E.U
G06F	13/385	6/9/2016	E.U

Microchip Ex. 1002, p. 199
Microchip v. Aptiv
IPR2024-00495

Issue Classification	Application/Control No.	Applicant(s)/Patent Under Reexamination
	14487947	VOTO ET AL.
	Examiner	**Art Unit**
	ERNEST UNELUS	2181

CPC						
Symbol					**Type**	**Version**
G06F		13	/	385	F	2013-01-01
G06F		13	/	4022	I	2013-01-01
G06F		13	/	4045	I	2013-01-01
G06F		2213	/	4004	A	2013-01-01
G06F		2213	/	0042	A	2013-01-01
			/			
			/			
			/			
			/			
			/			
			/			
			/			
			/			
			/			
			/			

CPC Combination Sets								
Symbol					**Type**	**Set**	**Ranking**	**Version**
			/					
			/					

NONE (Assistant Examiner)	(Date)	**Total Claims Allowed:** 17	
/ERNEST UNELUS/ Primary Examiner.Art Unit 2181 (Primary Examiner)	06/09/2016 (Date)	O.G. Print Claim(s) 1	O.G. Print Figure 4

U.S. Patent and Trademark Office

Part of Paper No. 20160609

Issue Classification	Application/Control No.	Applicant(s)/Patent Under Reexamination
	14487947	VOTO ET AL.
	Examiner	**Art Unit**
	ERNEST UNELUS	2181

US ORIGINAL CLASSIFICATION		INTERNATIONAL CLASSIFICATION	
CLASS	SUBCLASS	CLAIMED	NON-CLAIMED

CROSS REFERENCE(S)

CLASS	SUBCLASS (ONE SUBCLASS PER BLOCK)				

NONE (Assistant Examiner)	(Date)	**Total Claims Allowed:** 17	
/ERNEST UNELUS/ Primary Examiner.Art Unit 2181 (Primary Examiner)	06/09/2016 (Date)	O.G. Print Claim(s) 1	O.G. Print Figure 4

U.S. Patent and Trademark Office

Part of Paper No. 20160609

Issue Classification	Application/Control No.	Applicant(s)/Patent Under Reexamination
	14487947	VOTO ET AL.
	Examiner	**Art Unit**
	ERNEST UNELUS	2181

☐ Claims renumbered in the same order as presented by applicant ☐ CPA ☐ T.D. ☐ R.1.47

Final	Original	Final	Original	Final	Original	Final	Original	Final	Original	Final	Original	Final	Original	Final	Original
1	1	11	17												
2	2	12	18												
3	3	13	19												
4	4	14	20												
5	5	15	21												
	6	16	22												
6	7	17	23												
7	8														
8	9														
9	10														
10	11														
	12														
	13														
	14														
	15														
	16														

NONE (Assistant Examiner)	(Date)	**Total Claims Allowed:** 17	
/ERNEST UNELUS/ Primary Examiner.Art Unit 2181 (Primary Examiner)	06/09/2016 (Date)	O.G. Print Claim(s) 1	O.G. Print Figure 4

U.S. Patent and Trademark Office

Part of Paper No. 20160609

EAST Search History

EAST Search History (Prior Art)

Ref #	Hits	Search Query	DBs	Default Operator	Plurals	Time Stamp
L1	71	usb with (peripheral or device) and usb with (plurality or multiple) with (port or plug interface) with hub and switch$4 with (port or plug interface) and (simultaneously or concurrently) with (port or plug interface)	US-PGPUB; USPAT; USOCR; FPRS; EPO; JPO; DERWENT; IBM_TDB	OR	ON	2016/06/09 11:41
L2	161	usb with (peripheral or device) and usb with (plurality or multiple or second or another) with (port or plug interface) with hub and switch$4 with (port or plug interface) and (simultaneously or concurrently) with (port or plug interface)	US-PGPUB; USPAT; USOCR; FPRS; EPO; JPO; DERWENT; IBM_TDB	OR	ON	2016/06/09 11:41
L3	32	usb with (peripheral or device) and usb with (plurality or multiple or second or another) near (port or plug interface) with hub and switch$4 with (port or plug interface) and (simultaneously or concurrently) with (port or plug interface)	US-PGPUB; USPAT; USOCR; FPRS; EPO; JPO; DERWENT; IBM_TDB	OR	ON	2016/06/09 11:42
L5	3	(vehicle or automobile or car) with usb with (peripheral or device) and usb with (plurality or multiple) with (port or plug interface) and G06F2213/3812.cpc.	US-PGPUB; USPAT; USOCR; FPRS; EPO; JPO; DERWENT; IBM_TDB	OR	ON	2016/06/09 12:07
L6	5	(vehicle or automobile or car) with usb with (peripheral or device) and usb with (plurality or multiple) with (port or plug interface) and G06F13/385.cpc.	US-PGPUB; USPAT; USOCR; FPRS; EPO; JPO; DERWENT; IBM_TDB	OR	ON	2016/06/09 12:07
L7	14293	G06F13/385.cpc.	US-PGPUB; USPAT; USOCR; FPRS; EPO; JPO; DERWENT; IBM_TDB	OR	ON	2016/06/09 12:07
L8	30	usb with (peripheral or device) and usb with (plurality or multiple or second or another) with (port or plug interface) with hub and switch$4 with (port or plug interface) and (simultaneously or concurrently) with (port or plug interface) and 710/$.ccls.	US-PGPUB; USPAT; USOCR; FPRS; EPO; JPO; DERWENT; IBM_TDB	OR	ON	2016/06/09 12:10
L9	0	usb with (peripheral or device) and usb	US-PGPUB;	OR	ON	2016/06/09

		with (plurality or multiple or second or another) with (port or plug interface) with hub and switch$4 with (port or plug interface) and (simultaneously or concurrently) with (port or plug interface) and 710/14.ccls.	USPAT; USOCR; FPRS; EPO; JPO; DERWENT; IBM_TDB			12:26
L10	8	usb with (peripheral or device) and usb with (plurality or multiple or second or another) with (port or plug interface) with hub and switch$4 with (port or plug interface) and (simultaneously or concurrently) with (port or plug interface) and G06F13/4022.cpc.	US-PGPUB; USPAT; USOCR; FPRS; EPO; JPO; DERWENT; IBM_TDB	OR	ON	2016/06/09 12:26
L11	1	usb with (peripheral or device) and usb with (plurality or multiple or second or another) with (port or plug interface) with hub and switch$4 with (port or plug interface) and (simultaneously or concurrently) with (port or plug interface) and G06F13/4068.cpc.	US-PGPUB; USPAT; USOCR; FPRS; EPO; JPO; DERWENT; IBM_TDB	OR	ON	2016/06/09 12:27
L12	9	usb with (peripheral or device) and usb with (plurality or multiple or second or another) with (port or plug interface) with hub and switch$4 with (port or plug interface) and (simultaneously or concurrently) with (port or plug interface) and G06F13/4045.cpc.	US-PGPUB; USPAT; USOCR; FPRS; EPO; JPO; DERWENT; IBM_TDB	OR	ON	2016/06/09 12:27
L13	5	usb with (peripheral or device) and usb with (plurality or multiple or second or another) with (port or plug interface) with hub and switch$4 with (port or plug interface) and (simultaneously or concurrently) with (port or plug interface) and bridg$3 and G06F13/4022.cpc.	US-PGPUB; USPAT; USOCR; FPRS; EPO; JPO; DERWENT; IBM_TDB	OR	ON	2016/06/09 12:34
L14	3	usb with (peripheral or device) and usb with (plurality or multiple or second or another) with (port or plug interface) with hub and switch$4 with (port or plug interface) and (simultaneously or concurrently) with (port or plug interface) and bridg$3 and G06F2213/0042.cpc.	US-PGPUB; USPAT; USOCR; FPRS; EPO; JPO; DERWENT; IBM_TDB	OR	ON	2016/06/09 13:13
L15	7439	G06F13/4022.cpc.	US-PGPUB; USPAT; USOCR; FPRS; EPO; JPO; DERWENT; IBM_TDB	OR	ON	2016/06/09 13:16
L16	25	Shyambabu Yeda.in. or Robert Voto.in. or Craig Petku.in.	US-PGPUB; USPAT; USOCR; FPRS; EPO; JPO; DERWENT; IBM_TDB	NEAR	ON	2016/06/09 13:16
L17	1	16 and (vehicle or automobile or car) with usb with (peripheral or device) and bridge	US-PGPUB; USPAT; USOCR; FPRS; EPO;	OR	ON	2016/06/09 13:18

			JPO; DERWENT; IBM_TDB			
L18	1	usb with (peripheral or device) and usb with (plurality or multiple or second or another) with (port or plug interface) with hub and switch$4 with (port or plug interface) and (simultaneously or concurrently) with (port or plug interface) and G06F13/4027.cpc.	US-PGPUB; USPAT; USOCR; FPRS; EPO; JPO; DERWENT; IBM_TDB	OR	ON	2016/06/09 13:36

6/9/2016 1:46:09 PM
C:\Users\eunelus\Documents\EAST\Workspaces\14487947.wsp

Microchip Ex. 1002, p. 205
Microchip v. Aptiv
IPR2024-00495

UNITED STATES PATENT AND TRADEMARK OFFICE

UNITED STATES DEPARTMENT OF COMMERCE
United States Patent and Trademark Office
Address: COMMISSIONER FOR PATENTS
P.O. Box 1450
Alexandria, Virginia 22313-1450
www.uspto.gov

BIB DATA SHEET

CONFIRMATION NO. 2147

SERIAL NUMBER	FILING or 371(c) DATE	CLASS	GROUP ART UNIT	ATTORNEY DOCKET NO.
14/487,947	09/16/2014 RULE	710	2181	40651-163154

APPLICANTS
Unwired Technology LLC, Woodbury, NY

INVENTORS
Robert Voto, Clarkston, MI;
Shyambabu Yeda, Rochester Hills, MI;
Craig Petku, Clarkston, MI;

**** CONTINUING DATA ****************************
This appln claims benefit of 61/882,915 09/26/2013

**** FOREIGN APPLICATIONS ****************************

**** IF REQUIRED, FOREIGN FILING LICENSE GRANTED **** ** SMALL ENTITY **
09/22/2014

Foreign Priority claimed ☐ Yes ☑ No 35 USC 119(a-d) conditions met ☐ Yes ☐ No Verified and Acknowledged /ERNEST UNELUS/ Examiner's Signature	☐ Met after Allowance E.U Initials	STATE OR COUNTRY	SHEETS DRAWINGS	TOTAL CLAIMS	INDEPENDENT CLAIMS
		MI	8	~~22~~ 17	1

ADDRESS

MARIA E. KITZ
CLARK HILL PLC
150 NORTH MICHIGAN AVENUE
SUITE 2700
CHICAGO, IL 60601
UNITED STATES

TITLE

FLEXIBLE MOBILE DEVICE CONNECTIVITY TO AUTOMOTIVE SYSTEMS WITH USB HUBS

FILING FEE RECEIVED		
880	FEES: Authority has been given in Paper No._____ to charge/credit DEPOSIT ACCOUNT No._____ for following:	☐ All Fees ☐ 1.16 Fees (Filing) ☐ 1.17 Fees (Processing Ext. of time) ☐ 1.18 Fees (Issue) ☐ Other _____ ☐ Credit

Index of Claims	Application/Control No.	Applicant(s)/Patent Under Reexamination
	14487947	VOTO ET AL.
	Examiner	**Art Unit**
	ERNEST UNELUS	2181

✓	Rejected	-	Cancelled	N	Non-Elected	A	Appeal
=	Allowed	÷	Restricted	I	Interference	O	Objected

☐ Claims renumbered in the same order as presented by applicant ☐ CPA ☐ T.D. ☐ R.1.47

CLAIM		DATE								
Final	Original	08/13/2015	02/01/2016	06/09/2016						
1	1	✓	✓	=						
2	2	✓	✓	=						
3	3	✓	✓	=						
4	4	✓	✓	=						
5	5	✓	✓	=						
	6	✓	-	-						
6	7	✓	✓	=						
7	8	✓	✓	=						
8	9	✓	✓	=						
9	10	✓	✓	=						
10	11	✓	✓	=						
	12	✓	-	-						
	13	✓	-	-						
	14	✓	-	-						
	15	✓	-	-						
	16	✓	-	-						
11	17	✓	✓	=						
12	18	✓	✓	=						
13	19	✓	✓	=						
14	20	✓	✓	=						
15	21	✓	✓	=						
16	22	✓	✓	=						
17	23		✓	=						

Microchip Ex. 1002, p. 207
Microchip v. Aptiv
IPR2024-00495

UNITED STATES PATENT AND TRADEMARK OFFICE

UNITED STATES DEPARTMENT OF COMMERCE
United States Patent and Trademark Office
Address: COMMISSIONER FOR PATENTS
P.O. Box 1450
Alexandria, Virginia 22313-1450
www.uspto.gov

APPLICATION NUMBER	FILING or 371(c) DATE	GRP ART UNIT	FIL FEE REC'D	ATTY.DOCKET.NO	TOT CLAIMS	IND CLAIMS
14/487,947	09/16/2014	2181	880	40651-163154	22	1

CONFIRMATION NO. 2147

CORRECTED FILING RECEIPT

279
MARIA E. KITZ
CLARK HILL PLC
150 NORTH MICHIGAN AVENUE
SUITE 2700
CHICAGO, IL 60601

Date Mailed: 06/23/2016

Receipt is acknowledged of this non-provisional patent application. The application will be taken up for examination in due course. Applicant will be notified as to the results of the examination. Any correspondence concerning the application must include the following identification information: the U.S. APPLICATION NUMBER, FILING DATE, NAME OF APPLICANT, and TITLE OF INVENTION. Fees transmitted by check or draft are subject to collection. Please verify the accuracy of the data presented on this receipt. **If an error is noted on this Filing Receipt, please submit a written request for a Filing Receipt Correction. Please provide a copy of this Filing Receipt with the changes noted thereon. If you received a "Notice to File Missing Parts" for this application, please submit any corrections to this Filing Receipt with your reply to the Notice. When the USPTO processes the reply to the Notice, the USPTO will generate another Filing Receipt incorporating the requested corrections**

Inventor(s)

Robert Voto, Clarkston, MI;
Shyambabu Yeda, Rochester Hills, MI;
Craig Petku, Clarkston, MI;

Applicant(s)

Delphi Technologies, Inc., Troy, MI

Power of Attorney: The patent practitioners associated with Customer Number 00279

Domestic Priority data as claimed by applicant

This appln claims benefit of 61/882,915 09/26/2013

Foreign Applications for which priority is claimed (You may be eligible to benefit from the **Patent Prosecution Highway** program at the USPTO. Please see http://www.uspto.gov for more information.) - None.
Foreign application information must be provided in an Application Data Sheet in order to constitute a claim to foreign priority. See 37 CFR 1.55 and 1.76.

Permission to Access Application via Priority Document Exchange: Yes

Permission to Access Search Results: No

Applicant may provide or rescind an authorization for access using Form PTO/SB/39 or Form PTO/SB/69 as appropriate.

If Required, Foreign Filing License Granted: 09/22/2014

Microchip Ex. 1002, p. 208
Microchip v. Aptiv
IPR2024-00495

The country code and number of your priority application, to be used for filing abroad under the Paris Convention, is **US 14/487,947**

Projected Publication Date: Not Applicable

Non-Publication Request: No

Early Publication Request: No
**** SMALL ENTITY ****
Title

FLEXIBLE MOBILE DEVICE CONNECTIVITY TO AUTOMOTIVE SYSTEMS WITH USB HUBS

Preliminary Class

710

Statement under 37 CFR 1.55 or 1.78 for AIA (First Inventor to File) Transition Applications: No

PROTECTING YOUR INVENTION OUTSIDE THE UNITED STATES

Since the rights granted by a U.S. patent extend only throughout the territory of the United States and have no effect in a foreign country, an inventor who wishes patent protection in another country must apply for a patent in a specific country or in regional patent offices. Applicants may wish to consider the filing of an international application under the Patent Cooperation Treaty (PCT). An international (PCT) application generally has the same effect as a regular national patent application in each PCT-member country. The PCT process **simplifies** the filing of patent applications on the same invention in member countries, but **does not result** in a grant of "an international patent" and does not eliminate the need of applicants to file additional documents and fees in countries where patent protection is desired.

Almost every country has its own patent law, and a person desiring a patent in a particular country must make an application for patent in that country in accordance with its particular laws. Since the laws of many countries differ in various respects from the patent law of the United States, applicants are advised to seek guidance from specific foreign countries to ensure that patent rights are not lost prematurely.

Applicants also are advised that in the case of inventions made in the United States, the Director of the USPTO must issue a license before applicants can apply for a patent in a foreign country. The filing of a U.S. patent application serves as a request for a foreign filing license. The application's filing receipt contains further information and guidance as to the status of applicant's license for foreign filing.

Applicants may wish to consult the USPTO booklet, "General Information Concerning Patents" (specifically, the section entitled "Treaties and Foreign Patents") for more information on timeframes and deadlines for filing foreign patent applications. The guide is available either by contacting the USPTO Contact Center at 800-786-9199, or it can be viewed on the USPTO website at http://www.uspto.gov/web/offices/pac/doc/general/index.html.

For information on preventing theft of your intellectual property (patents, trademarks and copyrights), you may wish to consult the U.S. Government website, http://www.stopfakes.gov. Part of a Department of Commerce initiative, this website includes self-help "toolkits" giving innovators guidance on how to protect intellectual property in specific countries such as China, Korea and Mexico. For questions regarding patent enforcement issues, applicants may call the U.S. Government hotline at 1-866-999-HALT (1-866-999-4258).

Microchip Ex. 1002, p. 209
Microchip v. Aptiv
IPR2024-00495

LICENSE FOR FOREIGN FILING UNDER

Title 35, United States Code, Section 184

Title 37, Code of Federal Regulations, 5.11 & 5.15

GRANTED

The applicant has been granted a license under 35 U.S.C. 184, if the phrase "IF REQUIRED, FOREIGN FILING LICENSE GRANTED" followed by a date appears on this form. Such licenses are issued in all applications where the conditions for issuance of a license have been met, regardless of whether or not a license may be required as set forth in 37 CFR 5.15. The scope and limitations of this license are set forth in 37 CFR 5.15(a) unless an earlier license has been issued under 37 CFR 5.15(b). The license is subject to revocation upon written notification. The date indicated is the effective date of the license, unless an earlier license of similar scope has been granted under 37 CFR 5.13 or 5.14.

This license is to be retained by the licensee and may be used at any time on or after the effective date thereof unless it is revoked. This license is automatically transferred to any related applications(s) filed under 37 CFR 1.53(d). This license is not retroactive.

The grant of a license does not in any way lessen the responsibility of a licensee for the security of the subject matter as imposed by any Government contract or the provisions of existing laws relating to espionage and the national security or the export of technical data. Licensees should apprise themselves of current regulations especially with respect to certain countries, of other agencies, particularly the Office of Defense Trade Controls, Department of State (with respect to Arms, Munitions and Implements of War (22 CFR 121-128)); the Bureau of Industry and Security, Department of Commerce (15 CFR parts 730-774); the Office of Foreign AssetsControl, Department of Treasury (31 CFR Parts 500+) and the Department of Energy.

NOT GRANTED

No license under 35 U.S.C. 184 has been granted at this time, if the phrase "IF REQUIRED, FOREIGN FILING LICENSE GRANTED" DOES NOT appear on this form. Applicant may still petition for a license under 37 CFR 5.12, if a license is desired before the expiration of 6 months from the filing date of the application. If 6 months has lapsed from the filing date of this application and the licensee has not received any indication of a secrecy order under 35 U.S.C. 181, the licensee may foreign file the application pursuant to 37 CFR 5.15(b).

SelectUSA

The United States represents the largest, most dynamic marketplace in the world and is an unparalleled location for business investment, innovation, and commercialization of new technologies. The U.S. offers tremendous resources and advantages for those who invest and manufacture goods here. Through SelectUSA, our nation works to promote and facilitate business investment. SelectUSA provides information assistance to the international investor community; serves as an ombudsman for existing and potential investors; advocates on behalf of U.S. cities, states, and regions competing for global investment; and counsels U.S. economic development organizations on investment attraction best practices. To learn more about why the United States is the best country in the world to develop technology, manufacture products, deliver services, and grow your business, visit http://www.SelectUSA.gov or call +1-202-482-6800.

PART B - FEE(S) TRANSMITTAL

Complete and send this form, together with applicable fee(s), to: Mail **Mail Stop ISSUE FEE**
Commissioner for Patents
P.O. Box 1450
Alexandria, Virginia 22313-1450
or Fax (571)-273-2885

INSTRUCTIONS: This form should be used for transmitting the ISSUE FEE and PUBLICATION FEE (if required). Blocks 1 through 5 should be completed where appropriate. All further correspondence including the Patent, advance orders and notification of maintenance fees will be mailed to the current correspondence address as indicated unless corrected below or directed otherwise in Block 1, by (a) specifying a new correspondence address; and/or (b) indicating a separate "FEE ADDRESS" for maintenance fee notifications.

CURRENT CORRESPONDENCE ADDRESS (Note: Use Block 1 for any change of address)

279 7580 06/20/2016
MARIA E. KITZ
CLARK HILL PLC
150 NORTH MICHIGAN AVENUE
SUITE 2700
CHICAGO, IL 60601

Note: A certificate of mailing can only be used for domestic mailings of the Fee(s) Transmittal. This certificate cannot be used for any other accompanying papers. Each additional paper, such as an assignment or formal drawing, must have its own certificate of mailing or transmission.

Certificate of Mailing or Transmission
I hereby certify that this Fee(s) Transmittal is being deposited with the United States Postal Service with sufficient postage for first class mail in an envelope addressed to the Mail Stop ISSUE FEE address above, or being facsimile transmitted to the USPTO (571) 273-2885, on the date indicated below.

(Depositor's name)
(Signature)
(Date)

APPLICATION NO.	FILING DATE	FIRST NAMED INVENTOR	ATTORNEY DOCKET NO.	CONFIRMATION NO.
14/487,947	09/16/2014	Robert Voto	40651-163154	2147

TITLE OF INVENTION: FLEXIBLE MOBILE DEVICE CONNECTIVITY TO AUTOMOTIVE SYSTEMS WITH USB HUBS

APPLN. TYPE	ENTITY STATUS	ISSUE FEE DUE	PUBLICATION FEE DUE	PREV. PAID ISSUE FEE	TOTAL FEE(S) DUE	DATE DUE
nonprovisional	SMALL	$480	$0	$0	$480	09/20/2016

EXAMINER	ART UNIT	CLASS-SUBCLASS
UNELUS, ERNEST	2181	710-014000

1. Change of correspondence address or indication of "Fee Address" (37 CFR 1.363).
- ☐ Change of correspondence address (or Change of Correspondence Address form PTO/SB/122) attached.
- ☐ "Fee Address" indication (or "Fee Address" Indication form PTO/SB/47; Rev 03-02 or more recent) attached. **Use of a Customer Number is required.**

2. For printing on the patent front page, list
(1) The names of up to 3 registered patent attorneys or agents OR, alternatively,
(2) The name of a single firm (having as a member a registered attorney or agent) and the names of up to 2 registered patent attorneys or agents. If no name is listed, no name will be printed.

1 Robert J. Myers
2
3

3. ASSIGNEE NAME AND RESIDENCE DATA TO BE PRINTED ON THE PATENT (print or type)

PLEASE NOTE: Unless an assignee is identified below, no assignee data will appear on the patent. If an assignee is identified below, the document has been filed for recordation as set forth in 37 CFR 3.11. Completion of this form is NOT a substitute for filing an assignment.

(A) NAME OF ASSIGNEE: Delphi Technologies, Inc.
(B) RESIDENCE: (CITY and STATE OR COUNTRY): Troy, MI

Please check the appropriate assignee category or categories (will not be printed on the patent): ☐ Individual ☒ Corporation or other private group entity ☐ Government

4a. The following fee(s) are submitted:
- ☒ Issue Fee
- ☐ Publication Fee (No small entity discount permitted)
- ☐ Advance Order - # of Copies .....

4b. Payment of Fee(s): **(Please first reapply any previously paid issue fee shown above)**
- ☐ A check is enclosed.
- ☐ Payment by credit card. Form PTO-2038 is attached.
- ☒ The director is hereby authorized to charge the required fee(s), any deficiency, or credits any overpayment, to Deposit Account Number 50-0221 (enclose an extra copy of this form).

5. **Change in Entity Status** (from status indicated above)
- ☐ Applicant certifying micro entity status. See 37 CFR 1.29 — NOTE: Absent a valid certification of Micro Entity Status (see forms PTO/SB/15A and 15B), issue fee payment in the micro entity amount will not be accepted at the risk of application abandonment.
- ☐ Applicant asserting small entity status. See 37 CFR 1.27 — NOTE: If the application was previously under micro entity status, checking this box will be taken to be a notification of loss of entitlement to micro entity status.
- ☐ Applicant changing to regular undiscounted fee status. — NOTE: Checking this box will be taken to be a notification of loss of entitlement to small or micro entity status, as applicable.

NOTE: This form must be signed in accordance with 37 CFR 1.31 and 1.33. See 37 CFR 1.4 for signature requirements and certifications.

Authorized Signature: Landace Powell — Date: 06 Sep 2016
Typed or printed name: Landace Powell — Registration No. .....

Microchip Ex. 1002, p. 211
Microchip v. Aptiv
IPR2024-00495

Electronic Patent Application Fee Transmittal

Application Number:	14487947
Filing Date:	16-Sep-2014
Title of Invention:	FLEXIBLE MOBILE DEVICE CONNECTIVITY TO AUTOMOTIVE SYSTEMS WITH USB HUBS
First Named Inventor/Applicant Name:	Robert Voto
Filer:	Lawrence Dean Hazelton/Kandace Powell
Attorney Docket Number:	40651-163154

Filed as Large Entity

Filing Fees for Utility under 35 USC 111(a)

Description	Fee Code	Quantity	Amount	Sub-Total in USD($)
Basic Filing:				
Pages:				
Claims:				
Miscellaneous-Filing:				
Petition:				
Patent-Appeals-and-Interference:				
Post-Allowance-and-Post-Issuance:				
Utility Appl Issue Fee	1501	1	960	960

Description	Fee Code	Quantity	Amount	Sub-Total in USD($)
Extension-of-Time:				
Miscellaneous:				
			Total in USD ($)	**960**

Electronic Acknowledgement Receipt

EFS ID:	26842360
Application Number:	14487947
International Application Number:	
Confirmation Number:	2147
Title of Invention:	FLEXIBLE MOBILE DEVICE CONNECTIVITY TO AUTOMOTIVE SYSTEMS WITH USB HUBS
First Named Inventor/Applicant Name:	Robert Voto
Customer Number:	279
Filer:	Lawrence Dean Hazelton/Kandace Powell
Filer Authorized By:	Lawrence Dean Hazelton
Attorney Docket Number:	40651-163154
Receipt Date:	06-SEP-2016
Filing Date:	16-SEP-2014
Time Stamp:	15:41:23
Application Type:	Utility under 35 USC 111(a)

Payment information:

Submitted with Payment	yes
Payment Type	DA
Payment was successfully received in RAM	$960
RAM confirmation Number	090716INTEFSW00002374500831
Deposit Account	500831
Authorized User	Kandace Powell
The Director of the USPTO is hereby authorized to charge indicated fees and credit any overpayment as follows:	

37 CFR 1.20 (Post Issuance fees)

37 CFR 1.21 (Miscellaneous fees and charges)

File Listing:

Document Number	Document Description	File Name	File Size(Bytes)/ Message Digest	Multi Part /.zip	Pages (if appl.)
1	Issue Fee Payment (PTO-85B)	DP322307_PTOL_85.pdf	136702 fdd74588b35eea9a3bf529f55f2e1410f8cbf15a	no	1
Warnings:					
The page size in the PDF is too large. The pages should be 8.5 x 11 or A4. If this PDF is submitted, the pages will be resized upon entry into the Image File Wrapper and may affect subsequent processing					
Information:					
2	Fee Worksheet (SB06)	fee-info.pdf	31006 7194c40b2cfcf5a99cfd8112d4802c67c4013bb9	no	2
Warnings:					
Information:					
		Total Files Size (in bytes):	167708		

This Acknowledgement Receipt evidences receipt on the noted date by the USPTO of the indicated documents, characterized by the applicant, and including page counts, where applicable. It serves as evidence of receipt similar to a Post Card, as described in MPEP 503.

<u>New Applications Under 35 U.S.C. 111</u>
If a new application is being filed and the application includes the necessary components for a filing date (see 37 CFR 1.53(b)-(d) and MPEP 506), a Filing Receipt (37 CFR 1.54) will be issued in due course and the date shown on this Acknowledgement Receipt will establish the filing date of the application.

<u>National Stage of an International Application under 35 U.S.C. 371</u>
If a timely submission to enter the national stage of an international application is compliant with the conditions of 35 U.S.C. 371 and other applicable requirements a Form PCT/DO/EO/903 indicating acceptance of the application as a national stage submission under 35 U.S.C. 371 will be issued in addition to the Filing Receipt, in due course.

<u>New International Application Filed with the USPTO as a Receiving Office</u>
If a new international application is being filed and the international application includes the necessary components for an international filing date (see PCT Article 11 and MPEP 1810), a Notification of the International Application Number and of the International Filing Date (Form PCT/RO/105) will be issued in due course, subject to prescriptions concerning national security, and the date shown on this Acknowledgement Receipt will establish the international filing date of the application.

UNITED STATES PATENT AND TRADEMARK OFFICE

UNITED STATES DEPARTMENT OF COMMERCE
United States Patent and Trademark Office
Address: COMMISSIONER FOR PATENTS
P.O. Box 1450
Alexandria, Virginia 22313-1450
www.uspto.gov

APPLICATION NO.	ISSUE DATE	PATENT NO.	ATTORNEY DOCKET NO.	CONFIRMATION NO.
14/487,947	10/04/2016	9460037	40651-163154	2147

279 7590 09/14/2016

Amy Lazzari
CLARK HILL PLC
150 NORTH MICHIGAN AVENUE
SUITE 2700
CHICAGO, IL 60601

ISSUE NOTIFICATION

The projected patent number and issue date are specified above.

Determination of Patent Term Adjustment under 35 U.S.C. 154 (b)
(application filed on or after May 29, 2000)

The Patent Term Adjustment is 0 day(s). Any patent to issue from the above-identified application will include an indication of the adjustment on the front page.

If a Continued Prosecution Application (CPA) was filed in the above-identified application, the filing date that determines Patent Term Adjustment is the filing date of the most recent CPA.

Applicant will be able to obtain more detailed information by accessing the Patent Application Information Retrieval (PAIR) WEB site (http://pair.uspto.gov).

Any questions regarding the Patent Term Extension or Adjustment determination should be directed to the Office of Patent Legal Administration at (571)-272-7702. Questions relating to issue and publication fee payments should be directed to the Application Assistance Unit (AAU) of the Office of Data Management (ODM) at (571)-272-4200.

APPLICANT(s) (Please see PAIR WEB site http://pair.uspto.gov for additional applicants):

Robert Voto, Clarkston, MI;
Delphi Technologies, Inc., Troy, MI
Shyambabu Yeda, Rochester Hills, MI;
Craig Petku, Clarkston, MI;

The United States represents the largest, most dynamic marketplace in the world and is an unparalleled location for business investment, innovation, and commercialization of new technologies. The USA offers tremendous resources and advantages for those who invest and manufacture goods here. Through SelectUSA, our nation works to encourage and facilitate business investment. To learn more about why the USA is the best country in the world to develop technology, manufacture products, and grow your business, visit SelectUSA.gov.

IR103 (Rev. 10/09)

PATENT ASSIGNMENT COVER SHEET

Electronic Version v1.1
Stylesheet Version v1.2

EPAS ID: PAT5157768

SUBMISSION TYPE:	NEW ASSIGNMENT
NATURE OF CONVEYANCE:	ASSIGNMENT

CONVEYING PARTY DATA

Name	Execution Date
DELPHI TECHNOLOGIES INC.	01/01/2018

RECEIVING PARTY DATA

Name:	APTIV TECHNOLOGIES LIMITED
Street Address:	ERIN COURT, BISHOP'S COURT HILL
City:	ST. MICHAEL
State/Country:	BARBADOS

PROPERTY NUMBERS Total: 966

Property Type	Number
Patent Number:	6646845
Patent Number:	6286222
Patent Number:	6401047
Patent Number:	6286221
Patent Number:	6358104
Patent Number:	6246936
Patent Number:	6329779
Patent Number:	6500030
Patent Number:	6575607
Patent Number:	6441726
Patent Number:	6447131
Patent Number:	6407696
Patent Number:	6380757
Patent Number:	6305957
Patent Number:	6356827
Patent Number:	6408784
Patent Number:	6434486
Patent Number:	6404157
Patent Number:	6302552
Patent Number:	6422062
Patent Number:	6404328

Property Type	Number
Patent Number:	6469659
Patent Number:	6384355
Patent Number:	6559763
Patent Number:	6613468
Patent Number:	6678166
Patent Number:	6464050
Patent Number:	6662912
Patent Number:	6366153
Patent Number:	6479766
Patent Number:	6723979
Patent Number:	6447132
Patent Number:	6620535
Patent Number:	6692859
Patent Number:	7037615
Patent Number:	6553294
Patent Number:	6828559
Patent Number:	6435530
Patent Number:	6542802
Patent Number:	6453224
Patent Number:	6548914
Patent Number:	7000946
Patent Number:	6542792
Patent Number:	6485337
Patent Number:	6424898
Patent Number:	6554318
Patent Number:	6874378
Patent Number:	6434958
Patent Number:	6873714
Patent Number:	6650252
Patent Number:	6644689
Patent Number:	6583753
Patent Number:	6864015
Patent Number:	7085687
Patent Number:	6761568
Patent Number:	6492938
Patent Number:	6624503
Patent Number:	6850825
Patent Number:	6556166

Property Type	Number
Patent Number:	7003032
Patent Number:	8197981
Patent Number:	6533230
Patent Number:	7279243
Patent Number:	7025903
Patent Number:	6860224
Patent Number:	6767411
Patent Number:	6561305
Patent Number:	6564694
Patent Number:	6749038
Patent Number:	6762427
Patent Number:	6438477
Patent Number:	6438476
Patent Number:	6566616
Patent Number:	6578871
Patent Number:	6662094
Patent Number:	6868745
Patent Number:	7352355
Patent Number:	6753780
Patent Number:	6552294
Patent Number:	6605877
Patent Number:	6897819
Patent Number:	6927674
Patent Number:	6897770
Patent Number:	6362731
Patent Number:	6668221
Patent Number:	6714848
Patent Number:	6722922
Patent Number:	6888265
Patent Number:	6692316
Patent Number:	6356851
Patent Number:	6936989
Patent Number:	6650978
Patent Number:	6910827
Patent Number:	6905901
Patent Number:	6803743
Patent Number:	6932769
Patent Number:	6837751

Property Type	Number
Patent Number:	6925114
Patent Number:	6663250
Patent Number:	6859144
Patent Number:	7000948
Patent Number:	6683534
Patent Number:	6818842
Patent Number:	6669426
Patent Number:	7324715
Patent Number:	7037349
Patent Number:	7178139
Patent Number:	6847001
Patent Number:	6794987
Patent Number:	7598846
Patent Number:	7133752
Patent Number:	7095501
Patent Number:	6889146
Patent Number:	7252559
Patent Number:	6833535
Patent Number:	6984466
Patent Number:	7435490
Patent Number:	7001682
Patent Number:	7147953
Patent Number:	7144644
Patent Number:	6942942
Patent Number:	6967064
Patent Number:	7279246
Patent Number:	6921596
Patent Number:	7410016
Patent Number:	7422812
Patent Number:	7001685
Patent Number:	7537849
Patent Number:	7131264
Patent Number:	7582375
Patent Number:	7008716
Patent Number:	6997278
Patent Number:	7512461
Patent Number:	7131665
Patent Number:	6739889

Property Type	Number
Patent Number:	7202792
Patent Number:	7024294
Patent Number:	7201984
Patent Number:	7412058
Patent Number:	7606327
Patent Number:	6824406
Patent Number:	6886417
Patent Number:	7120554
Patent Number:	7064721
Patent Number:	7162153
Patent Number:	6917890
Patent Number:	7021811
Patent Number:	7457699
Patent Number:	7217300
Patent Number:	7575826
Patent Number:	7166001
Patent Number:	7002699
Patent Number:	7350954
Patent Number:	7280662
Patent Number:	7523237
Patent Number:	7308347
Patent Number:	6987229
Patent Number:	7015709
Patent Number:	6950629
Patent Number:	7261604
Patent Number:	7231177
Patent Number:	7190325
Patent Number:	7206679
Patent Number:	6925370
Patent Number:	7499283
Patent Number:	7736903
Patent Number:	7252400
Patent Number:	6966233
Patent Number:	6927678
Patent Number:	7441257
Patent Number:	7351102
Patent Number:	6935687
Patent Number:	7163075

Property Type	Number
Patent Number:	7449648
Patent Number:	7191269
Patent Number:	7149089
Patent Number:	7366643
Patent Number:	7875997
Patent Number:	7230998
Patent Number:	7386056
Patent Number:	7656966
Patent Number:	7645532
Patent Number:	7215713
Patent Number:	7280613
Patent Number:	7751497
Patent Number:	7657225
Patent Number:	7230992
Patent Number:	6896524
Patent Number:	7095569
Patent Number:	7331671
Patent Number:	7362885
Patent Number:	7512159
Patent Number:	7785725
Patent Number:	7473228
Patent Number:	7499696
Patent Number:	7326482
Patent Number:	7179558
Patent Number:	7009551
Patent Number:	7049859
Patent Number:	7021952
Patent Number:	7156697
Patent Number:	7039514
Patent Number:	7306755
Patent Number:	7997542
Patent Number:	7423665
Patent Number:	7700044
Patent Number:	7504839
Patent Number:	7697766
Patent Number:	7674538
Patent Number:	7306871
Patent Number:	7689008

Property Type	Number
Patent Number:	7294827
Patent Number:	7623966
Patent Number:	7095567
Patent Number:	7254820
Patent Number:	7323686
Patent Number:	7008270
Patent Number:	7818989
Patent Number:	7424354
Patent Number:	7364301
Patent Number:	7499779
Patent Number:	7660655
Patent Number:	7575665
Patent Number:	7623950
Patent Number:	7230523
Patent Number:	7791670
Patent Number:	7697886
Patent Number:	7777778
Patent Number:	7026549
Patent Number:	7148482
Patent Number:	7146276
Patent Number:	7385520
Patent Number:	7403845
Patent Number:	7693481
Patent Number:	7050908
Patent Number:	7781123
Patent Number:	7564907
Patent Number:	7720184
Patent Number:	7590399
Patent Number:	7830983
Patent Number:	7350934
Patent Number:	8642345
Patent Number:	8455262
Patent Number:	7279132
Patent Number:	7478875
Patent Number:	7937672
Patent Number:	7773697
Patent Number:	7822149
Patent Number:	7439866

Property Type	Number
Patent Number:	7269483
Patent Number:	7474262
Patent Number:	7119705
Patent Number:	7176390
Patent Number:	7539661
Patent Number:	7570170
Patent Number:	7324191
Patent Number:	7486835
Patent Number:	7403848
Patent Number:	7422819
Patent Number:	7094081
Patent Number:	7552792
Patent Number:	7798276
Patent Number:	7295771
Patent Number:	7288009
Patent Number:	7325870
Patent Number:	7410212
Patent Number:	7224270
Patent Number:	7048584
Patent Number:	7412314
Patent Number:	7998632
Patent Number:	7546194
Patent Number:	8218411
Patent Number:	7611327
Patent Number:	7501938
Patent Number:	7425889
Patent Number:	7327225
Patent Number:	7180257
Patent Number:	7589487
Patent Number:	7474068
Patent Number:	7538500
Patent Number:	7094099
Patent Number:	7253722
Patent Number:	7415337
Patent Number:	7422283
Patent Number:	7623594
Patent Number:	7352145
Patent Number:	8658013

Property Type	Number
Patent Number:	7176776
Patent Number:	7372055
Patent Number:	7492962
Patent Number:	7348880
Patent Number:	7463161
Patent Number:	7474264
Patent Number:	7324043
Patent Number:	7245261
Patent Number:	7436270
Patent Number:	7861517
Patent Number:	7349783
Patent Number:	7322392
Patent Number:	7944967
Patent Number:	7828478
Patent Number:	7710249
Patent Number:	7858214
Patent Number:	7351973
Patent Number:	7480351
Patent Number:	7706978
Patent Number:	7931707
Patent Number:	7472007
Patent Number:	7528731
Patent Number:	7252553
Patent Number:	7438152
Patent Number:	7548270
Patent Number:	7580325
Patent Number:	7918381
Patent Number:	8168347
Patent Number:	7423540
Patent Number:	7310190
Patent Number:	7505841
Patent Number:	7204716
Patent Number:	7241156
Patent Number:	8042631
Patent Number:	7657994
Patent Number:	7659639
Patent Number:	7351098
Patent Number:	7650034

Property Type	Number
Patent Number:	7742621
Patent Number:	7201595
Patent Number:	7749012
Patent Number:	7267583
Patent Number:	7558555
Patent Number:	7468660
Patent Number:	7439458
Patent Number:	7462795
Patent Number:	7697913
Patent Number:	7468673
Patent Number:	7217891
Patent Number:	7876926
Patent Number:	7676892
Patent Number:	7448924
Patent Number:	7610250
Patent Number:	7689325
Patent Number:	7710333
Patent Number:	7675820
Patent Number:	7565126
Patent Number:	7578593
Patent Number:	7477181
Patent Number:	7635443
Patent Number:	7594629
Patent Number:	7371115
Patent Number:	7676087
Patent Number:	7351073
Patent Number:	7347738
Patent Number:	7332674
Patent Number:	7347743
Patent Number:	7646422
Patent Number:	7331831
Patent Number:	7745771
Patent Number:	7179136
Patent Number:	7396255
Patent Number:	7835834
Patent Number:	7868828
Patent Number:	7940955
Patent Number:	7370970

Property Type	Number
Patent Number:	7439507
Patent Number:	7351089
Patent Number:	7512516
Patent Number:	7278890
Patent Number:	8356682
Patent Number:	7758989
Patent Number:	7700215
Patent Number:	7201587
Patent Number:	7266469
Patent Number:	7423224
Patent Number:	7917111
Patent Number:	7687720
Patent Number:	7408116
Patent Number:	7438585
Patent Number:	7534962
Patent Number:	7771884
Patent Number:	8034499
Patent Number:	7759901
Patent Number:	7413479
Patent Number:	7735920
Patent Number:	7675296
Patent Number:	7804796
Patent Number:	7615713
Patent Number:	7805231
Patent Number:	7410114
Patent Number:	7645943
Patent Number:	7438497
Patent Number:	7726985
Patent Number:	7972422
Patent Number:	7384309
Patent Number:	7503793
Patent Number:	7434481
Patent Number:	8545153
Patent Number:	7800344
Patent Number:	7408123
Patent Number:	7940962
Patent Number:	7668525
Patent Number:	7618057

Property Type	Number
Patent Number:	8988884
Patent Number:	7733659
Patent Number:	8087165
Patent Number:	8284559
Patent Number:	8035976
Patent Number:	8493739
Patent Number:	8498126
Patent Number:	8570757
Patent Number:	8625292
Patent Number:	8731862
Patent Number:	8477509
Patent Number:	8593821
Patent Number:	8599568
Patent Number:	8625293
Patent Number:	8982561
Patent Number:	8947860
Patent Number:	8724335
Patent Number:	8830687
Patent Number:	8749988
Patent Number:	9119288
Patent Number:	9013881
Patent Number:	9237683
Patent Number:	9173332
Patent Number:	7422480
Patent Number:	7598455
Patent Number:	7710236
Patent Number:	7864544
Patent Number:	7635212
Patent Number:	7588466
Patent Number:	7331801
Patent Number:	7701321
Patent Number:	7617066
Patent Number:	8391780
Patent Number:	8011936
Patent Number:	7753713
Patent Number:	7498896
Patent Number:	7876204
Patent Number:	7601019

Property Type	Number
Patent Number:	7485012
Patent Number:	7957333
Patent Number:	7805120
Patent Number:	8055445
Patent Number:	7970175
Patent Number:	8104173
Patent Number:	7365102
Patent Number:	8199198
Patent Number:	7889234
Patent Number:	7523679
Patent Number:	7679378
Patent Number:	8045500
Patent Number:	8013539
Patent Number:	8116711
Patent Number:	7658642
Patent Number:	7790983
Patent Number:	7632118
Patent Number:	7869533
Patent Number:	7534138
Patent Number:	7636064
Patent Number:	7864118
Patent Number:	7641511
Patent Number:	7692096
Patent Number:	7674972
Patent Number:	8008589
Patent Number:	7963787
Patent Number:	8046135
Patent Number:	7510407
Patent Number:	7901820
Patent Number:	8050460
Patent Number:	7639171
Patent Number:	7932835
Patent Number:	7903629
Patent Number:	7609530
Patent Number:	7708919
Patent Number:	8055020
Patent Number:	8446381
Patent Number:	7876106

Property Type	Number
Patent Number:	8190139
Patent Number:	8116524
Patent Number:	8155380
Patent Number:	8051877
Patent Number:	8047860
Patent Number:	8400261
Patent Number:	7749031
Patent Number:	7868251
Patent Number:	8027168
Patent Number:	8180527
Patent Number:	8022834
Patent Number:	8045337
Patent Number:	8053128
Patent Number:	8115676
Patent Number:	7914278
Patent Number:	7651346
Patent Number:	7752925
Patent Number:	9276267
Patent Number:	8421641
Patent Number:	8237455
Patent Number:	7896435
Patent Number:	7757997
Patent Number:	7658645
Patent Number:	7668690
Patent Number:	8198992
Patent Number:	8092061
Patent Number:	8107915
Patent Number:	7780485
Patent Number:	7635286
Patent Number:	8052492
Patent Number:	7806007
Patent Number:	8094001
Patent Number:	7727022
Patent Number:	8164911
Patent Number:	8681507
Patent Number:	9042119
Patent Number:	9854683
Patent Number:	7722416

Property Type	Number
Patent Number:	8158909
Patent Number:	8249798
Patent Number:	7641499
Patent Number:	7896952
Patent Number:	7727020
Patent Number:	8091960
Patent Number:	7960652
Patent Number:	7794274
Patent Number:	7880480
Patent Number:	8154394
Patent Number:	8011253
Patent Number:	8499644
Patent Number:	8184856
Patent Number:	8092245
Patent Number:	8049174
Patent Number:	8213928
Patent Number:	7810444
Patent Number:	8760886
Patent Number:	8264856
Patent Number:	9237685
Patent Number:	8004212
Patent Number:	8004400
Patent Number:	8456177
Patent Number:	7855030
Patent Number:	7891260
Patent Number:	8477513
Patent Number:	9042467
Patent Number:	8232017
Patent Number:	9692079
Patent Number:	9356307
Patent Number:	8604968
Patent Number:	9063230
Patent Number:	9271430
Patent Number:	8164045
Patent Number:	7726972
Patent Number:	8336351
Patent Number:	8660737
Patent Number:	8011598

Property Type	Number
Patent Number:	8224623
Patent Number:	8500287
Patent Number:	8124037
Patent Number:	7833674
Patent Number:	8457844
Patent Number:	8489283
Patent Number:	8377705
Patent Number:	8360803
Patent Number:	8022346
Patent Number:	8500194
Patent Number:	8266798
Patent Number:	8350684
Patent Number:	8363957
Patent Number:	7932772
Patent Number:	8207796
Patent Number:	8564423
Patent Number:	7980872
Patent Number:	8375575
Patent Number:	9456531
Patent Number:	7931479
Patent Number:	8836538
Patent Number:	7905755
Patent Number:	8598475
Patent Number:	8400323
Patent Number:	8438862
Patent Number:	8816995
Patent Number:	8259952
Patent Number:	8837140
Patent Number:	8105113
Patent Number:	8219286
Patent Number:	8259962
Patent Number:	8466438
Patent Number:	9112219
Patent Number:	8420278
Patent Number:	8833945
Patent Number:	8129951
Patent Number:	8277055
Patent Number:	8920993

Property Type	Number
Patent Number:	7955104
Patent Number:	8305773
Patent Number:	9125293
Patent Number:	8379769
Patent Number:	8599971
Patent Number:	8646176
Patent Number:	8713771
Patent Number:	8043106
Patent Number:	8181343
Patent Number:	9229531
Patent Number:	8757825
Patent Number:	9063560
Patent Number:	8641142
Patent Number:	8650351
Patent Number:	8573994
Patent Number:	8488303
Patent Number:	8267702
Patent Number:	8558713
Patent Number:	9111669
Patent Number:	9063327
Patent Number:	8813579
Patent Number:	9322724
Patent Number:	8287306
Patent Number:	8539283
Patent Number:	8362992
Patent Number:	8305678
Patent Number:	8333622
Patent Number:	8363325
Patent Number:	8279510
Patent Number:	8480798
Patent Number:	9052736
Patent Number:	8440358
Patent Number:	8235744
Patent Number:	8926107
Patent Number:	8832934
Patent Number:	8210864
Patent Number:	8548407
Patent Number:	8277243

Property Type	Number
Patent Number:	D669033
Patent Number:	8323046
Patent Number:	8333603
Patent Number:	8038455
Patent Number:	8833185
Patent Number:	9190224
Patent Number:	8442425
Patent Number:	8441394
Patent Number:	8387457
Patent Number:	9839152
Patent Number:	8408765
Patent Number:	9227513
Patent Number:	8559981
Patent Number:	8579240
Patent Number:	8398282
Patent Number:	9172177
Patent Number:	8197982
Patent Number:	8827744
Patent Number:	9725003
Patent Number:	8485853
Patent Number:	8585447
Patent Number:	9153834
Patent Number:	9379571
Patent Number:	9707853
Patent Number:	8379302
Patent Number:	8556666
Patent Number:	8746889
Patent Number:	8477401
Patent Number:	8610841
Patent Number:	8842043
Patent Number:	8680936
Patent Number:	8553334
Patent Number:	8613470
Patent Number:	8823641
Patent Number:	9280208
Patent Number:	9297897
Patent Number:	8947217
Patent Number:	8622774

Property Type	Number
Patent Number:	8758035
Patent Number:	8973989
Patent Number:	8412413
Patent Number:	8503088
Patent Number:	8784127
Patent Number:	9047518
Patent Number:	9690320
Patent Number:	8489316
Patent Number:	8584315
Patent Number:	9662983
Patent Number:	8659408
Patent Number:	9004954
Patent Number:	9126502
Patent Number:	9118911
Patent Number:	8884169
Patent Number:	9282655
Patent Number:	8925189
Patent Number:	9011186
Patent Number:	8882521
Patent Number:	9005490
Patent Number:	9039450
Patent Number:	9291184
Patent Number:	D680952
Patent Number:	D686984
Patent Number:	D686985
Patent Number:	9024804
Patent Number:	8712364
Patent Number:	9293745
Patent Number:	9017897
Patent Number:	9061603
Patent Number:	9236758
Patent Number:	8823551
Patent Number:	9304042
Patent Number:	9369001
Patent Number:	9715986
Patent Number:	9407038
Patent Number:	8977090
Patent Number:	8991045

Property Type	Number
Patent Number:	9042809
Patent Number:	9071016
Patent Number:	9391393
Patent Number:	9061591
Patent Number:	8992251
Patent Number:	9297892
Patent Number:	8926344
Patent Number:	8965599
Patent Number:	9622355
Patent Number:	8930045
Patent Number:	9616829
Patent Number:	9099809
Patent Number:	9114720
Patent Number:	9368910
Patent Number:	9112278
Patent Number:	9356300
Patent Number:	9455516
Patent Number:	9153879
Patent Number:	9118130
Patent Number:	9520601
Patent Number:	9698434
Patent Number:	9494024
Patent Number:	9647291
Patent Number:	9537243
Patent Number:	8992258
Patent Number:	9812717
Patent Number:	9054454
Patent Number:	9117573
Patent Number:	9099814
Patent Number:	9270055
Patent Number:	9190739
Patent Number:	9153878
Patent Number:	9960502
Patent Number:	9153889
Patent Number:	9289848
Patent Number:	9666880
Patent Number:	9172183
Patent Number:	9653845

Property Type	Number
Patent Number:	8978201
Patent Number:	9917434
Patent Number:	9928941
Patent Number:	9042717
Patent Number:	9270318
Patent Number:	9153899
Patent Number:	9379394
Patent Number:	9531020
Patent Number:	9366281
Patent Number:	9142907
Patent Number:	9362659
Patent Number:	9231124
Patent Number:	9231310
Patent Number:	9379530
Patent Number:	9397485
Patent Number:	9331413
Patent Number:	9476283
Patent Number:	9640829
Patent Number:	9321365
Patent Number:	9502911
Patent Number:	9300069
Patent Number:	9328596
Patent Number:	9568600
Patent Number:	9228882
Patent Number:	9356438
Patent Number:	9376028
Patent Number:	9227526
Patent Number:	9281619
Patent Number:	9543747
Patent Number:	9887529
Patent Number:	9310468
Patent Number:	9293812
Patent Number:	9843132
Patent Number:	9577367
Patent Number:	9541637
Patent Number:	9621874
Patent Number:	9300085
Patent Number:	9728896

Property Type	Number
Patent Number:	9362676
Patent Number:	9594155
Patent Number:	9450226
Patent Number:	9784820
Patent Number:	9407026
Patent Number:	9590348
Patent Number:	9506803
Patent Number:	9664775
Patent Number:	9395538
Patent Number:	9404774
Patent Number:	9379486
Patent Number:	9504172
Patent Number:	9472885
Patent Number:	9508344
Patent Number:	9559379
Patent Number:	9911056
Patent Number:	9862318
Patent Number:	9711898
Patent Number:	9680332
Patent Number:	9469176
Patent Number:	9691514
Patent Number:	7233769
Patent Number:	8290173
Patent Number:	8208654
Patent Number:	7937118
Patent Number:	7076204
Patent Number:	6987947
Patent Number:	7359671
Patent Number:	7603080
Patent Number:	9167057
Patent Number:	9592528
Patent Number:	9537249
Patent Number:	9711902
Patent Number:	9568344
Patent Number:	9726514
Patent Number:	9619420
Patent Number:	9460037
Patent Number:	9645962

Property Type	Number
Patent Number:	9475461
Patent Number:	9810782
Patent Number:	9698501
Patent Number:	9910151
Patent Number:	9693459
Patent Number:	9350116
Patent Number:	9455523
Patent Number:	9499202
Patent Number:	9618936
Patent Number:	9555807
Patent Number:	9470777
Patent Number:	9472899
Patent Number:	9431771
Patent Number:	9768554
Patent Number:	9705228
Patent Number:	9781361
Patent Number:	10023120
Patent Number:	9608357
Patent Number:	9493083
Patent Number:	9590367
Patent Number:	9983301
Patent Number:	9923327
Patent Number:	9493118
Patent Number:	9727056
Patent Number:	9588517
Patent Number:	9604639
Patent Number:	9594378
Patent Number:	9637120
Patent Number:	9750151
Patent Number:	9537227
Patent Number:	9787031
Patent Number:	10082168
Patent Number:	D773964
Patent Number:	D802518
Patent Number:	9914475
Patent Number:	9762003
Patent Number:	9975437
Patent Number:	10032545

Property Type	Number
Patent Number:	9541639
Patent Number:	9627785
Patent Number:	9783130
Patent Number:	9798054
Patent Number:	9863866
Patent Number:	10031624
Patent Number:	7438610
Patent Number:	9836977
Patent Number:	9762001
Patent Number:	10021469
Patent Number:	9952319
Patent Number:	9764741
Patent Number:	10037696
Patent Number:	9864374
Patent Number:	10017134
Patent Number:	9953476
Patent Number:	9898008
Patent Number:	9671785
Patent Number:	9910440
Patent Number:	9989966
Patent Number:	10025311
Patent Number:	9787002
Patent Number:	9840232
Patent Number:	9841813
Patent Number:	9653846
Patent Number:	9840253
Patent Number:	9842500
Patent Number:	9634435
Patent Number:	9634445
Patent Number:	10019014
Patent Number:	9915003
Patent Number:	9667000
Patent Number:	9758114
Patent Number:	9653859
Patent Number:	9755362
Patent Number:	9960550
Patent Number:	10090622
Patent Number:	9692153

Property Type	Number
Patent Number:	9899128
Patent Number:	10090614
Patent Number:	9929508
Patent Number:	9705225
Patent Number:	9870001
Patent Number:	9944318
Patent Number:	9927810
Patent Number:	9853396
Patent Number:	10090608
Patent Number:	10008786
Patent Number:	9780487
Patent Number:	9912101
Patent Number:	9893479
Patent Number:	10014583
Patent Number:	10026321
Patent Number:	9928939
Patent Number:	10089875
Patent Number:	10078334
Patent Number:	10031231
Patent Number:	9865968
Patent Number:	9793639
Patent Number:	9899758
Patent Number:	10021797
Patent Number:	9901018
Patent Number:	9978707
Patent Number:	9917381
Patent Number:	10037472
Patent Number:	10086809
Patent Number:	9906003
Patent Number:	9991620
Patent Number:	9917402
Patent Number:	10020599
Patent Number:	10025316
Patent Number:	9954347
Patent Number:	10028391
Patent Number:	9929509
Patent Number:	9979167
Patent Number:	10079446

Property Type	Number
Patent Number:	10017659
Patent Number:	6168445
Patent Number:	6430120
Patent Number:	6099154
Patent Number:	6087976
Patent Number:	6018131
Patent Number:	6323487
Patent Number:	6236004
Patent Number:	6161822
Patent Number:	6094160
Patent Number:	6006881
Patent Number:	6481701
Patent Number:	6157881
Patent Number:	5969599
Patent Number:	5964817
Patent Number:	6222442
Patent Number:	6219606
Patent Number:	6186486
Patent Number:	6430489
Patent Number:	6166454
Patent Number:	6898498
Patent Number:	6139351
Patent Number:	6270115
Patent Number:	6356854
Patent Number:	6414265
Patent Number:	6230494
Patent Number:	6392166
Patent Number:	6151540
Patent Number:	6420797
Patent Number:	6220876
Patent Number:	6402321
Patent Number:	6043937
Patent Number:	6236308

CORRESPONDENCE DATA

Fax Number:

Correspondence will be sent to the e-mail address first; if that is unsuccessful, it will be sent using a fax number, if provided; if that is unsuccessful, it will be sent via US Mail.

Phone: 2488131214

Email:	craig.a.baldwin@aptiv.com
Correspondent Name:	CRAIG A. BALDWIN
Address Line 1:	5725 INNOVATION DRIVE
Address Line 4:	TROY, MICHIGAN 48098

NAME OF SUBMITTER:	CRAIG A. BALDWIN
SIGNATURE:	/Craig A. Baldwin/
DATE SIGNED:	09/25/2018
	This document serves as an Oath/Declaration (37 CFR 1.63).

Total Attachments: 19

source=Confirmatory Assignment DTI to ATL Jan 1 2018 Granted Patents#page1.tif
source=Confirmatory Assignment DTI to ATL Jan 1 2018 Granted Patents#page2.tif
source=Confirmatory Assignment DTI to ATL Jan 1 2018 Granted Patents#page3.tif
source=Confirmatory Assignment DTI to ATL Jan 1 2018 Granted Patents#page4.tif
source=Confirmatory Assignment DTI to ATL Jan 1 2018 Granted Patents#page5.tif
source=Confirmatory Assignment DTI to ATL Jan 1 2018 Granted Patents#page6.tif
source=Confirmatory Assignment DTI to ATL Jan 1 2018 Granted Patents#page7.tif
source=Confirmatory Assignment DTI to ATL Jan 1 2018 Granted Patents#page8.tif
source=Confirmatory Assignment DTI to ATL Jan 1 2018 Granted Patents#page9.tif
source=Confirmatory Assignment DTI to ATL Jan 1 2018 Granted Patents#page10.tif
source=Confirmatory Assignment DTI to ATL Jan 1 2018 Granted Patents#page11.tif
source=Confirmatory Assignment DTI to ATL Jan 1 2018 Granted Patents#page12.tif
source=Confirmatory Assignment DTI to ATL Jan 1 2018 Granted Patents#page13.tif
source=Confirmatory Assignment DTI to ATL Jan 1 2018 Granted Patents#page14.tif
source=Confirmatory Assignment DTI to ATL Jan 1 2018 Granted Patents#page15.tif
source=Confirmatory Assignment DTI to ATL Jan 1 2018 Granted Patents#page16.tif
source=Confirmatory Assignment DTI to ATL Jan 1 2018 Granted Patents#page17.tif
source=Confirmatory Assignment DTI to ATL Jan 1 2018 Granted Patents#page18.tif
source=Confirmatory Assignment DTI to ATL Jan 1 2018 Granted Patents#page19.tif

Confirmatory Assignment

Whereas, **DELPHI TECHNOLOGIES, INC.**, of 5725 Delphi Drive, Troy, Michigan 48098,U.S.A, hereinafter called Assignor, is the assignee of record of the entire right, title and interest in the U.S. Patents listed in the attached **Appendix** (hereinafter the "Assigned Patent Rights") by assignment recorded with the U.S. Patent and Trademark Office; and

Whereas, **APTIV TECHNOLOGIES LIMITED**, a company incorporated in accordance with the Companies Act CAP 308 of the laws of Barbados (company no. 41949) and licensed to operate as an International Business Company, whose registered office is at Erin Court, Bishop's Court Hill, St. Michael, Barbados, hereinafter called Assignee, desires to acquire the Assignor's entire right, title, and interest including rights to recover for past infringement in the Assigned Patents.

Therefore, for valuable consideration, receipt of which is hereby acknowledged, the above named Assignor, hereby sells, assigns and transfers to the above named Assignee, its successors and assigns, the Assignor's entire right, title and interest including rights to recover for past infringement in the Assigned Patents; and Assignor will execute without further consideration all papers deemed necessary by the Assignee in connection with said Assigned Patents when called upon to do so by the Assignee.

This Assignment is made effective as of January 1, 2018.

ASSIGNOR:
Delphi Technologies, Inc.

By: _____

Name: CRAIG A. BALDWIN

Title: ASSISTANT SECRETARY

1/18

APPENDIX
List of Assigned Patent Rights

Case Number	Country	Application No.	Filing Date	Patent No.	Patent Date
DP-300140	US	09/667095	21-Sep-2000	6646845	11-Nov-2003
DP-300307	US	09/482044	13-Jan-2000	6286222	11-Sep-2001
DP-300308	US	09/482042	13-Jan-2000	6401047	04-Jun-2002
DP-300309	US	09/482043	13-Jan-2000	6286221	11-Sep-2001
DP-300384	US	09/480069	10-Jan-2000	6358104	19-Mar-2002
DP-300436	US	09/412936	05-Oct-1999	6246936	12-Jun-2001
DP-300504	US	09/648971	28-Aug-2000	6329779	11-Dec-2001
DP-301058	US	09/774273	30-Jan-2001	6500030	31-Dec-2002
DP-301097	US	09/541708	03-Apr-2000	6575607	10-Jun-2003
DP-301098	US	09/541563	03-Apr-2000	6441726	27-Aug-2002
DP-301126	US	09/648973	28-Aug-2000	6447131	10-Sep-2002
DP-301180	US	09/570691	12-May-2000	6407696	18-Jun-2002
DP-301258	US	09/586802	05-Jun-2000	6380757	30-Apr-2002
DP-301347	US	09/512725	24-Feb-2000	6305957	23-Oct-2001
DP-301395	US	09/579481	30-May-2000	6356827	12-Mar-2002
DP-301580	US	09/579482	30-May-2000	6408784	25-Jun-2002
DP-301685	US	09/648972	28-Aug-2000	6434486	13-Aug-2002
DP-301916	US	09/626996	27-Jul-2000	6404157	11-Jun-2002
DP-302024	US	09/580618	30-May-2000	6302552	16-Oct-2001
DP-302041	US	09/650131	29-Aug-2000	6422062	23-Jul-2002
DP-302088	US	09/696748	24-Oct-2000	6404328	11-Jun-2002
DP-302089	US	09/847207	03-May-2001	6469659	22-Oct-2002
DP-302127	US	09/944617	04-Sep-2001	6384355	07-May-2002
DP-302135	US	09/840553	23-Apr-2001	6559763	06-May-2003
DP-302559	US	09/747434	22-Dec-2000	6613468	02-Sep-2003
DP-302676	US	09/689720	13-Oct-2000	6678166	13-Jan-2004
DP-302729	US	09/821870	30-Mar-2001	6464050	15-Oct-2002
DP-302729	US	10/200648	22-Jul-2002	6662912	16-Dec-2003
DP-302748	US	09/567527	09-May-2000	6366153	02-Apr-2002
DP-302749	US	09/816024	26-Mar-2001	6479766	12-Nov-2002
DP-302773	US	09/793452	27-Feb-2001	6723979	20-Apr-2004
DP-302870	US	09/785978	20-Feb-2001	6447132	10-Sep-2002
DP-302891	US	09/852245	09-May-2001	6620535	16-Sep-2003
DP-302892	US	09/852246	09-May-2001	6692859	17-Feb-2004
DP-302902	US	09/781687	12-Feb-2001	7037615	02-May-2006
DP-303016	US	09/690141	16-Oct-2000	6553294	22-Apr-2003
DP-303025	US	10/294492	14-Nov-2002	6828559	07-Dec-2004
DP-303150	US	09/775301	01-Feb-2001	6435530	20-Aug-2002
DP-303229	US	09/895742	02-Jul-2001	6542802	01-Apr-2003
DP-303232	US	09/690104	16-Oct-2000	6453224	17-Sep-2002
DP-303233	US	09/688586	16-Oct-2000	6548914	15-Apr-2003
DP-303258	US	10/348356	21-Jan-2003	7000946	21-Feb-2006
DP-303289	US	09/725645	29-Nov-2000	6542792	01-Apr-2003
DP-303407	US	09/935072	22-Aug-2001	6485337	26-Nov-2002
DP-303460	US	09/888065	22-Jun-2001	6424898	23-Jul-2002
DP-303528	US	09/796237	28-Feb-2001	6554318	29-Apr-2003
DP-303565	US	10/604548	30-Jul-2003	6874378	05-Apr-2005
DP-303730	US	09/767923	24-Jan-2001	6434958	20-Aug-2002
DP-303736	US	10/078871	19-Feb-2002	6873714	29-Mar-2005
DP-303917	US	09/940945	28-Aug-2001	6650252	18-Nov-2003

DP-304272	US	10/068752	08-Feb-2002	6644689	11-Nov-2003
DP-304294	US	10/115770	03-Apr-2002	6583753	24-Jun-2003
DP-304345	US	09/907062	17-Jul-2001	6864015	08-Mar-2005
DP-304449	US	10/393027	20-Mar-2003	7085687	01-Aug-2006
DP-304589	US	10/350665	24-Jan-2003	6761568	13-Jul-2004
DP-304664	US	10/072230	11-Feb-2002	6492938	10-Dec-2002
DP-304693	US	10/106753	26-Mar-2002	6624503	23-Sep-2003
DP-304694	US	10/061786	04-Feb-2002	6850825	01-Feb-2005
DP-304695	US	10/078872	19-Feb-2002	6556166	29-Apr-2003
DP-304828	US	10/075985	15-Feb-2002	7003032	21-Feb-2006
DP-304867	US	11/095063	31-Mar-2005	8197981	12-Jun-2012
DP-304936	US	10/015112	12-Dec-2001	6533230	18-Mar-2003
DP-304959	US	11/347140	03-Feb-2006	7279243	09-Oct-2007
DP-304989	US	09/996622	29-Nov-2001	7025903	11-Apr-2006
DP-305026	US	10/068754	08-Feb-2002	6860224	01-Mar-2005
DP-305031	US	10/099861	15-Mar-2002	6767411	27-Jul-2004
DP-305060	US	09/851464	08-May-2001	6561305	13-May-2003
DP-305063	US	09/897818	29-Jun-2001	6564694	20-May-2003
DP-305090	US	10/079131	20-Feb-2002	6749038	15-Jun-2004
DP-305117	US	10/327698	20-Dec-2002	6762427	13-Jul-2004
DP-305158	US	10/083730	27-Feb-2002	6438477	20-Aug-2002
DP-305159	US	10/083729	27-Feb-2002	6438476	20-Aug-2002
DP-305214	US	10/000670	31-Oct-2001	6566616	20-May-2003
DP-305298	US	09/972638	09-Oct-2001	6578871	17-Jun-2003
DP-305537	US	10/075984	15-Feb-2002	6662094	09-Dec-2003
DP-305561	US	10/140086	07-May-2002	6868745	22-Mar-2005
DP-305608	US	10/281863	28-Oct-2002	7352355	01-Apr-2008
DP-305712	US	10/099832	15-Mar-2002	6753780	22-Jun-2004
DP-305907	US	90/007517	22-Apr-2005	6552294C1	19-Sep-2006
DP-306006	US	10/082419	26-Feb-2002	6605877	12-Aug-2003
DP-306032	US	10/670431	23-Sep-2003	6897819	24-May-2005
DP-306104	US	10/103202	21-Mar-2002	6927674	09-Aug-2005
DP-306152	US	10/042576	09-Jan-2002	6897770	24-May-2005
DP-306152	US	09/730992	06-Dec-2000	6362731	26-Mar-2002
DP-306187	US	10/154362	23-May-2002	6668221	23-Dec-2003
DP-306215	US	10/319325	13-Dec-2002	6714848	30-Mar-2004
DP-306300	US	10/112955	02-Apr-2002	6722922	20-Apr-2004
DP-306314	US	10/243615	13-Sep-2002	6888265	03-May-2005
DP-306356	US	10/122177	16-Apr-2002	6692316	17-Feb-2004
DP-306520	US	09/245260	05-Feb-1999	6356851	12-Mar-2002
DP-306615	US	10/216151	09-Aug-2002	6936989	30-Aug-2005
DP-306663	US	10/159691	31-May-2002	6650978	18-Nov-2003
DP-306974	US	10/391106	18-Mar-2003	6910827	28-Jun-2005
DP-306976	US	10/107766	27-Mar-2002	6905901	14-Jun-2005
DP-306988	US	10/264932	04-Oct-2002	6803743	12-Oct-2004
DP-307001	US	10/447306	28-May-2003	6932769	23-Aug-2005
DP-307020	US	10/205245	25-Jul-2002	6837751	04-Jan-2005
DP-307046	US	10/263017	02-Oct-2002	6925114	02-Aug-2005
DP-307054	US	10/061691	01-Feb-2002	6663250	16-Dec-2003
DP-307073	US	10/358978	05-Feb-2003	6859144	22-Feb-2005
DP-307106	US	10/718331	20-Nov-2003	7000948	21-Feb-2006
DP-307424	US	10/159661	31-May-2002	6683534	27-Jan-2004
DP-307459	US	10/325538	19-Dec-2002	6818842	16-Nov-2004
DP-307499	US	10/170888	13-Jun-2002	6669426	30-Dec-2003
DP-307520	US	10/317750	12-Dec-2002	7324715	29-Jan-2008
DP-307529	US	10/229550	28-Aug-2002	7037349	02-May-2006

DP-307541	US	10/229832	27-Aug-2002	7178139	13-Feb-2007
DP-307603	US	10/226179	22-Aug-2002	6847001	25-Jan-2005
DP-307616	US	10/186784	01-Jul-2002	6794987	21-Sep-2004
DP-307767	US	10/784638	23-Feb-2004	7598846	06-Oct-2009
DP-307853	US	10/680534	07-Oct-2003	7133752	07-Nov-2006
DP-307898	US	10/348496	21-Jan-2003	7095501	22-Aug-2006
DP-307941	US	10/653463	02-Sep-2003	6889146	03-May-2005
DP-308059	US	11/580547	13-Oct-2006	7252559	07-Aug-2007
DP-308099	US	10/377424	28-Feb-2003	6833535	21-Dec-2004
DP-308120	US	10/178829	24-Jun-2002	6984466	10-Jan-2006
DP-308121	US	11/593672	07-Nov-2006	7435490	14-Oct-2008
DP-308126	US	10/178863	24-Jun-2002	7001682	21-Feb-2006
DP-308128	US	10/178282	24-Jun-2002	7147953	12-Dec-2006
DP-308129	US	10/178825	24-Jun-2002	7144644	05-Dec-2006
DP-308130	US	10/178114	24-Jun-2002	6942942	13-Sep-2005
DP-308132	US	10/178860	24-Jun-2002	6967064	22-Nov-2005
DP-308133	US	10/178878	24-Jun-2002	7279246	09-Oct-2007
DP-308136	US	10/178808	24-Jun-2002	6921596	26-Jul-2005
DP-308137	US	10/178125	24-Jun-2002	7410016	12-Aug-2008
DP-308138	US	10/178133	24-Jun-2002	7422812	09-Sep-2008
DP-308141	US	10/357748	04-Feb-2003	7001685	21-Feb-2006
DP-308160	US	10/238093	10-Sep-2002	7537849	26-May-2009
DP-308207	US	10/353304	29-Jan-2003	7131264	07-Nov-2006
DP-308217	US	11/199533	08-Aug-2005	7582375	01-Sep-2009
DP-308223	US	10/389452	14-Mar-2003	7008716	07-Mar-2006
DP-308224	US	10/666768	18-Sep-2003	6997278	14-Feb-2006
DP-308423	US	10/722706	25-Nov-2003	7512461	31-Mar-2009
DP-308580	US	10/706001	12-Nov-2003	7131665	07-Nov-2006
DP-308638	US	10/448683	30-May-2003	6739889	25-May-2004
DP-308723	US	10/291913	11-Nov-2002	7202792	10-Apr-2007
DP-308753	US	10/653698	02-Sep-2003	7024294	04-Apr-2006
DP-308846	US	10/606849	26-Jun-2003	7201984	10-Apr-2007
DP-308877	US	10/391107	18-Mar-2003	7412058	12-Aug-2008
DP-308984	US	10/628822	28-Jul-2003	7606327	20-Oct-2009
DP-309050	US	10/606919	26-Jun-2003	6824406	30-Nov-2004
DP-309055	US	10/665095	17-Sep-2003	6886417	03-May-2005
DP-309063	US	10/804245	18-Mar-2004	7120554	10-Oct-2006
DP-309088	US	10/607661	27-Jun-2003	7064721	20-Jun-2006
DP-309154	US	10/603540	25-Jun-2003	7162153	09-Jan-2007
DP-309213	US	10/447375	29-May-2003	6917890	12-Jul-2005
DP-309214	US	10/461097	13-Jun-2003	7021811	04-Apr-2006
DP-309337	US	10/761580	21-Jan-2004	7457699	25-Nov-2008
DP-309432	US	10/607609	27-Jun-2003	7217300	15-May-2007
DP-309451	US	11/825037	03-Jul-2007	7575826	18-Aug-2009
DP-309549	US	11/019041	21-Dec-2004	7166001	23-Jan-2007
DP-309576	US	10/784648	23-Feb-2004	7002699	21-Feb-2006
DP-309644	US	11/194173	01-Aug-2005	7350954	01-Apr-2008
DP-309659	US	10/700208	03-Nov-2003	7280662	09-Oct-2007
DP-309678	US	11/098143	31-Mar-2005	7523237	21-Apr-2009
DP-309769	US	10/618952	14-Jul-2003	7308347	11-Dec-2007
DP-309772	US	10/618905	14-Jul-2003	6987229	17-Jan-2006
DP-309779	US	10/843775	12-May-2004	7015709	21-Mar-2006
DP-309795	US	10/763910	23-Jan-2004	6950629	27-Sep-2005
DP-309820	US	10/741590	22-Dec-2003	7261604	28-Aug-2007
DP-309911	US	10/714009	13-Nov-2003	7231177	12-Jun-2007
DP-309976	US	10/781608	18-Feb-2004	7190325	13-Mar-2007

DP-310048	US	10/754055	08-Jan-2004	7206679	17-Apr-2007
DP-310128	US	10/679744	06-Oct-2003	6925370	02-Aug-2005
DP-310163	US	10/902672	29-Jul-2004	7499283	03-Mar-2009
DP-310180	US	11/243556	05-Oct-2005	7736903	15-Jun-2010
DP-310191	US	10/965990	15-Oct-2004	7252400	07-Aug-2007
DP-310204	US	10/679802	06-Oct-2003	6966233	22-Nov-2005
DP-310363	US	10/643044	18-Aug-2003	6927678	09-Aug-2005
DP-310378	US	10/797417	10-Mar-2004	7441257	21-Oct-2008
DP-310617	US	11/134646	20-May-2005	7351102	01-Apr-2008
DP-310627	US	10/784649	23-Feb-2004	6935687	30-Aug-2005
DP-310630	US	10/884737	02-Jul-2004	7163075	16-Jan-2007
DP-310648	US	11/250174	13-Oct-2005	7449648	11-Nov-2008
DP-310686	US	10/903543	30-Jul-2004	7191269	13-Mar-2007
DP-310692	US	10/757226	14-Jan-2004	7149089	12-Dec-2006
DP-310734	US	10/909186	30-Jul-2004	7366643	29-Apr-2008
DP-310764	US	10/566035	05-Feb-2008	7875997	25-Jan-2011
DP-310806	US	10/847944	18-May-2004	7230998	12-Jun-2007
DP-310806	US	10/995721	22-Nov-2004	7386056	10-Jun-2008
DP-310806	US	11/789600	25-Apr-2007	7656966	02-Feb-2010
DP-310812	US	10/909577	02-Aug-2004	7645532	12-Jan-2010
DP-310815	US	10/946657	22-Sep-2004	7215713	08-May-2007
DP-310822	US	10/946678	22-Sep-2004	7280613	09-Oct-2007
DP-310823	US	11/474735	26-Jun-2006	7751497	06-Jul-2010
DP-310823	US	11/474747	26-Jun-2006	7657225	02-Feb-2010
DP-310824	US	10/995946	22-Nov-2004	7230992	12-Jun-2007
DP-310831	US	10/767989	29-Jan-2004	6896524	24-May-2005
DP-310833	US	10/831828	26-Apr-2004	7095569	22-Aug-2006
DP-310844	US	10/813192	29-Mar-2004	7331671	19-Feb-2008
DP-310845	US	10/828005	20-Apr-2004	7362885	22-Apr-2008
DP-310855	US	10/931665	01-Sep-2004	7512159	31-Mar-2009
DP-310871	US	11/003897	03-Dec-2004	7785725	31-Aug-2010
DP-310891	US	10/887502	08-Jul-2004	7473228	06-Jan-2009
DP-310926	US	10/995013	22-Nov-2004	7499696	03-Mar-2009
DP-310950	US	10/793302	04-Mar-2004	7326482	05-Feb-2008
DP-310952	US	10/892591	15-Jul-2004	7179558	20-Feb-2007
DP-310999	US	10/974346	27-Oct-2004	7009551	07-Mar-2006
DP-311125	US	10/740333	18-Dec-2003	7049859	23-May-2006
DP-311161	US	11/045841	28-Jan-2005	7021952	04-Apr-2006
DP-311162	US	11/035600	14-Jan-2005	7156697	02-Jan-2007
DP-311257	US	10/797407	10-Mar-2004	7039514	02-May-2006
DP-311280	US	11/068024	28-Feb-2005	7306755	11-Dec-2007
DP-311280	US	11/983252	08-Nov-2007	7997542	16-Aug-2011
DP-311311	US	10/734317	12-Dec-2003	7423665	09-Sep-2008
DP-311315	US	11/033677	12-Jan-2005	7700044	20-Apr-2010
DP-311364	US	10/956318	01-Oct-2004	7504839	17-Mar-2009
DP-311370	US	11/082608	17-Mar-2005	7697766	13-Apr-2010
DP-311375	US	10/793354	04-Mar-2004	7674538	09-Mar-2010
DP-311376	US	10/793303	04-Mar-2004	7306871	11-Dec-2007
DP-311385	US	11/150684	10-Jun-2005	7689008	30-Mar-2010
DP-311441	US	10/711476	21-Sep-2004	7294827	13-Nov-2007
DP-311443	US	11/056904	11-Feb-2005	7623966	24-Nov-2009
DP-311476	US	10/919163	16-Aug-2004	7095567	22-Aug-2006
DP-311560	US	11/053521	08-Feb-2005	7254820	07-Aug-2007
DP-311591	US	11/282135	18-Nov-2005	7323686	29-Jan-2008
DP-311635	US	10/999776	30-Nov-2004	7008270	07-Mar-2006
DP-311685	US	12/482508	11-Jun-2009	7818989	26-Oct-2010

DP-311693	US	10/958815	05-Oct-2004	7424354	09-Sep-2008
DP-311701	US	10/986240	11-Nov-2004	7364301	29-Apr-2008
DP-311719	US	11/238776	29-Sep-2005	7499779	03-Mar-2009
DP-311720	US	10/958749	05-Oct-2004	7660655	09-Feb-2010
DP-311725	US	11/116509	28-Apr-2005	7575665	18-Aug-2009
DP-311866	US	11/149816	09-Jun-2005	7623950	24-Nov-2009
DP-311869	US	11/031232	07-Jan-2005	7230523	12-Jun-2007
DP-311871	US	11/126606	11-May-2005	7791670	07-Sep-2010
DP-311953	US	11/132581	19-May-2005	7697886	13-Apr-2010
DP-311969	US	10/974282	27-Oct-2004	7777778	17-Aug-2010
DP-311981	US	11/051833	04-Feb-2005	7026549	11-Apr-2006
DP-311983	US	10/808835	25-Mar-2004	7148482	12-Dec-2006
DP-312070	US	10/939778	13-Sep-2004	7146276	05-Dec-2006
DP-312079	US	11/146921	06-Jun-2005	7385520	10-Jun-2008
DP-312081	US	11/146939	06-Jun-2005	7403845	22-Jul-2008
DP-312097	US	11/029144	04-Jan-2005	7693481	06-Apr-2010
DP-312098	US	11/087041	22-Mar-2005	7050908	23-May-2006
DP-312197	US	11/145647	06-Jun-2005	7781123	24-Aug-2010
DP-312230	US	11/153696	15-Jun-2005	7564907	21-Jul-2009
DP-312231	US	11/201718	11-Aug-2005	7720184	18-May-2010
DP-312232	US	11/201883	11-Aug-2005	7590399	15-Sep-2009
DP-312235	US	11/069254	01-Mar-2005	7830983	09-Nov-2010
DP-312236	US	11/122196	03-May-2005	7350934	01-Apr-2008
DP-312277	US	13/785535	05-Mar-2013	8642345	04-Feb-2014
DP-312277	US	11/903141	20-Sep-2007	8455262	04-Jun-2013
DP-312277	US	11/033703	12-Jan-2005	7279132	09-Oct-2007
DP-312329	US	11/147148	06-Jun-2005	7478875	20-Jan-2009
DP-312354	US	12/210709	15-Sep-2008	7937672	03-May-2011
DP-312427	US	11/088129	23-Mar-2005	7773697	10-Aug-2010
DP-312428	US	11/143044	02-Jun-2005	7822149	26-Oct-2010
DP-312447	US	11/199800	09-Aug-2005	7439866	21-Oct-2008
DP-312484	US	10/921722	19-Aug-2004	7269483	11-Sep-2007
DP-312498	US	11/172684	01-Jul-2005	7474262	06-Jan-2009
DP-312499	US	10/978260	30-Oct-2004	7119705	10-Oct-2006
DP-312500	US	11/070068	02-Mar-2005	7176390	13-Feb-2007
DP-312506	US	11/143054	02-Jun-2005	7539661	26-May-2009
DP-312528	US	11/147906	08-Jun-2005	7570170	04-Aug-2009
DP-312542	US	11/096532	01-Apr-2005	7324191	29-Jan-2008
DP-312606	US	11/082546	17-Mar-2005	7486835	03-Feb-2009
DP-312647	US	10/919162	16-Aug-2004	7403848	22-Jul-2008
DP-312660	US	11/158369	22-Jun-2005	7422819	09-Sep-2008
DP-312701	US	11/088420	24-Mar-2005	7094081	22-Aug-2006
DP-312707	US	11/073438	07-Mar-2005	7552792	30-Jun-2009
DP-312707	US	12/467721	18-May-2009	7798276	21-Sep-2010
DP-312716	US	11/113521	25-Apr-2005	7295771	13-Nov-2007
DP-312721	US	11/221592	08-Sep-2005	7288009	30-Oct-2007
DP-312723	US	11/222028	08-Sep-2005	7325870	05-Feb-2008
DP-312727	US	11/222229	08-Sep-2005	7410212	12-Aug-2008
DP-312733	US	11/146928	06-Jun-2005	7224270	29-May-2007
DP-312785	US	11/159908	23-Jun-2005	7048584	23-May-2006
DP-312807	US	10/940397	14-Sep-2004	7412314	12-Aug-2008
DP-312822	US	11/133512	20-May-2005	7998632	16-Aug-2011
DP-312844	US	11/330028	10-Jan-2006	7546194	09-Jun-2009
DP-312861	US	11/352110	10-Feb-2006	8218411	10-Jul-2012
DP-312871	US	11/167790	27-Jun-2005	7611327	03-Nov-2009
DP-312913	US	11/135176	23-May-2005	7501938	10-Mar-2009

DP-312914	US	11/123421	06-May-2005	7425889	16-Sep-2008
DP-312956	US	11/147905	08-Jun-2005	7327225	05-Feb-2008
DP-312987	US	11/362672	27-Feb-2006	7180257	20-Feb-2007
DP-312988	US	11/362665	27-Feb-2006	7589487	15-Sep-2009
DP-312989	US	11/362643	27-Feb-2006	7474068	06-Jan-2009
DP-312989	US	12/218712	17-Jul-2008	7538500	26-May-2009
DP-313008	US	10/978660	01-Nov-2004	7094099	22-Aug-2006
DP-313030	US	11/149820	09-Jun-2005	7253722	07-Aug-2007
DP-313032	US	11/189260	26-Jul-2005	7415337	19-Aug-2008
DP-313039	US	11/146926	06-Jun-2005	7422283	09-Sep-2008
DP-313059	US	11/364320	28-Feb-2006	7623594	24-Nov-2009
DP-313066	US	11/363218	27-Feb-2006	7352145	01-Apr-2008
DP-313071	US	11/292179	01-Dec-2005	8658013	25-Feb-2014
DP-313119	US	11/417409	04-May-2006	7176776	13-Feb-2007
DP-313135	US	11/171069	30-Jun-2005	7372055	13-May-2008
DP-313273	US	11/212052	25-Aug-2005	7492962	17-Feb-2009
DP-313275	US	11/183639	18-Jul-2005	7348880	25-Mar-2008
DP-313277	US	11/292553	02-Dec-2005	7463161	09-Dec-2008
DP-313279	US	11/156124	17-Jun-2005	7474264	06-Jan-2009
DP-313289	US	11/219400	02-Sep-2005	7324043	29-Jan-2008
DP-313326	US	11/179866	12-Jul-2005	7245261	17-Jul-2007
DP-313330	US	11/313204	20-Dec-2005	7436270	14-Oct-2008
DP-313340	US	11/271716	09-Nov-2005	7861517	04-Jan-2011
DP-313414	US	11/150730	09-Jun-2005	7349783	25-Mar-2008
DP-313424	US	11/155429	17-Jun-2005	7322392	29-Jan-2008
DP-313477	US	11/191856	28-Jul-2005	7944967	17-May-2011
DP-313480	US	11/138532	26-May-2005	7828478	09-Nov-2010
DP-313484	US	11/496803	01-Aug-2006	7710249	04-May-2010
DP-313496	US	11/231703	21-Sep-2005	7858214	28-Dec-2010
DP-313503	US	11/353523	14-Feb-2006	7351973	01-Apr-2008
DP-313507	US	11/268120	07-Nov-2005	7480351	20-Jan-2009
DP-313528	US	11/219207	02-Sep-2005	7706978	27-Apr-2010
DP-313555	US	11/110043	20-Apr-2005	7931707	26-Apr-2011
DP-313595	US	11/219233	02-Sep-2005	7472007	30-Dec-2008
DP-313597	US	11/158388	22-Jun-2005	7528731	05-May-2009
DP-313600	US	11/261697	28-Oct-2005	7252553	07-Aug-2007
DP-313619	US	11/174162	30-Jun-2005	7438152	21-Oct-2008
DP-313636	US	11/222285	08-Sep-2005	7548270	16-Jun-2009
DP-313659	US	11/287954	28-Nov-2005	7580325	25-Aug-2009
DP-313663	US	11/287841	28-Nov-2005	7918381	05-Apr-2011
DP-313712	US	11/250678	14-Oct-2005	8168347	01-May-2012
DP-313772	US	11/317431	23-Dec-2005	7423540	09-Sep-2008
DP-313786	US	11/351010	09-Feb-2006	7310190	18-Dec-2007
DP-313789	US	11/218671	02-Sep-2005	7505841	17-Mar-2009
DP-313799	US	11/365305	01-Mar-2006	7204716	17-Apr-2007
DP-313827	US	11/496598	31-Jul-2006	7241156	10-Jul-2007
DP-313832	US	11/370285	08-Mar-2006	8042631	25-Oct-2011
DP-313852	US	11/253515	19-Oct-2005	7657994	09-Feb-2010
DP-313863	US	11/475636	27-Jun-2006	7659639	09-Feb-2010
DP-313899	US	11/403271	13-Apr-2006	7351098	01-Apr-2008
DP-313992	US	11/300621	14-Dec-2005	7650034	19-Jan-2010
DP-313993	US	11/452116	13-Jun-2006	7742621	22-Jun-2010
DP-314016	US	11/327274	06-Jan-2006	7201595	10-Apr-2007
DP-314016	US	11/712006	28-Feb-2007	7749012	06-Jul-2010
DP-314034	US	11/523282	19-Sep-2006	7267583	11-Sep-2007
DP-314084	US	11/282024	17-Nov-2005	7558555	07-Jul-2009

DP-314094	US	11/243011	04-Oct-2005	7468660	23-Dec-2008
DP-314122	US	11/509858	25-Aug-2006	7439458	21-Oct-2008
DP-314123	US	11/496190	31-Jul-2006	7462795	09-Dec-2008
DP-314126	US	11/311884	19-Dec-2005	7697913	13-Apr-2010
DP-314165	US	11/473625	23-Jun-2006	7468673	23-Dec-2008
DP-314197	US	11/239646	29-Sep-2005	7217891	15-May-2007
DP-314205	US	11/592824	03-Nov-2006	7876926	25-Jan-2011
DP-314219	US	11/341148	27-Jan-2006	7676892	16-Mar-2010
DP-314246	US	11/543604	05-Oct-2006	7448924	11-Nov-2008
DP-314262	US	11/527907	27-Sep-2006	7610250	27-Oct-2009
DP-314306	US	11/494786	26-Jul-2006	7689325	30-Mar-2010
DP-314316	US	11/437363	19-May-2006	7710333	04-May-2010
DP-314335	US	11/787497	17-Apr-2007	7675820	09-Mar-2010
DP-314338	US	11/407454	20-Apr-2006	7565126	21-Jul-2009
DP-314360	US	11/444841	01-Jun-2006	7578593	25-Aug-2009
DP-314367	US	11/706017	14-Feb-2007	7477181	13-Jan-2009
DP-314372	US	11/403358	13-Apr-2006	7635443	22-Dec-2009
DP-314396	US	11/450647	09-Jun-2006	7594629	29-Sep-2009
DP-314409	US	11/639836	15-Dec-2006	7371115	13-May-2008
DP-314418	US	11/523986	20-Sep-2006	7676087	09-Mar-2010
DP-314496	US	11/643522	21-Dec-2006	7351073	01-Apr-2008
DP-314537	US	11/403270	13-Apr-2006	7347738	25-Mar-2008
DP-314545	US	11/406622	19-Apr-2006	7332674	19-Feb-2008
DP-314551	US	11/406933	19-Apr-2006	7347743	25-Mar-2008
DP-314573	US	11/542980	04-Oct-2006	7646422	12-Jan-2010
DP-314578	US	11/595663	10-Nov-2006	7331831	19-Feb-2008
DP-314633	US	11/732296	03-Apr-2007	7745771	29-Jun-2010
DP-314670	US	11/523358	19-Sep-2006	7179136	20-Feb-2007
DP-314691	US	11/523414	19-Sep-2006	7396255	08-Jul-2008
DP-314717	US	11/484873	11-Jul-2006	7835834	16-Nov-2010
DP-314719	US	12/001293	11-Dec-2007	7868828	11-Jan-2011
DP-314728	US	11/493279	26-Jul-2006	7940955	10-May-2011
DP-314752	US	11/452669	14-Jun-2006	7370970	13-May-2008
DP-314792	US	11/609778	12-Dec-2006	7439507	21-Oct-2008
DP-314840	US	11/796083	26-Apr-2007	7351089	01-Apr-2008
DP-314863	US	11/982653	02-Nov-2007	7512516	31-Mar-2009
DP-314866	US	11/493264	26-Jul-2006	7278890	09-Oct-2007
DP-314893	US	11/645849	27-Dec-2006	8356682	22-Jan-2013
DP-314896	US	11/527908	27-Sep-2006	7758989	20-Jul-2010
DP-314897	US	11/406873	19-Apr-2006	7700215	20-Apr-2010
DP-314914	US	11/496682	31-Jul-2006	7201587	10-Apr-2007
DP-314951	US	11/442560	25-May-2006	7266469	04-Sep-2007
DP-314983	US	11/640164	15-Dec-2006	7423224	09-Sep-2008
DP-315071	US	11/544440	04-Oct-2006	7917111	29-Mar-2011
DP-315096	US	12/215012	24-Jun-2008	7687720	30-Mar-2010
DP-315096	US	11/473648	23-Jun-2006	7408116	05-Aug-2008
DP-315112	US	11/711258	27-Feb-2007	7438585	21-Oct-2008
DP-315125	US	11/483788	10-Jul-2006	7534962	19-May-2009
DP-315130	US	11/406958	19-Apr-2006	7771884	10-Aug-2010
DP-315140	US	11/784125	05-Apr-2007	8034499	11-Oct-2011
DP-315142	US	11/895034	22-Aug-2007	7759901	20-Jul-2010
DP-315171	US	11/707292	16-Feb-2007	7413479	19-Aug-2008
DP-315174	US	11/961220	20-Dec-2007	7735920	15-Jun-2010
DP-315191	US	11/519043	11-Sep-2006	7675296	09-Mar-2010
DP-315268	US	11/459415	24-Jul-2006	7804796	28-Sep-2010
DP-315293	US	11/633958	05-Dec-2006	7615713	10-Nov-2009

DP-315309	US	11/478347	29-Jun-2006	7805231	28-Sep-2010
DP-315350	US	11/519537	12-Sep-2006	7410114	12-Aug-2008
DP-315362	US	11/827442	11-Jul-2007	7645943	12-Jan-2010
DP-315373	US	11/717461	13-Mar-2007	7438497	21-Oct-2008
DP-315389	US	11/708446	20-Feb-2007	7726985	01-Jun-2010
DP-315392	US	11/804885	21-May-2007	7972422	05-Jul-2011
DP-315425	US	11/654823	18-Jan-2007	7384309	10-Jun-2008
DP-315428	US	11/654861	18-Jan-2007	7503793	17-Mar-2009
DP-315449	US	11/706016	14-Feb-2007	7434481	14-Oct-2008
DP-315485	US	12/011885	30-Jan-2008	8545153	01-Oct-2013
DP-315488	US	11/708500	20-Feb-2007	7800344	21-Sep-2010
DP-315516	US	11/600396	16-Nov-2006	7408123	05-Aug-2008
DP-315567	US	11/890066	03-Aug-2007	7940962	10-May-2011
DP-315597	US	11/712719	01-Mar-2007	7668525	23-Feb-2010
DP-315608	US	11/779114	17-Jul-2007	7618057	17-Nov-2009
DP-315624	US	14/048082	08-Oct-2013	8988884	24-Mar-2015
DP-315624	US	11/893357	15-Aug-2007	7733659	08-Jun-2010
DP-315624	US	12/713423	26-Feb-2010	8087165	03-Jan-2012
DP-315624	US	12/759731	14-Apr-2010	8284559	09-Oct-2012
DP-315624	US	12/764195	21-Apr-2010	8035976	11-Oct-2011
DP-315624	US	13/208635	12-Aug-2011	8493739	23-Jul-2013
DP-315624	US	13/208655	12-Aug-2011	8498126	30-Jul-2013
DP-315624	US	13/208670	12-Aug-2011	8570757	29-Oct-2013
DP-315624	US	13/208687	12-Aug-2011	8625292	07-Jan-2014
DP-315624	US	13/208714	12-Aug-2011	8731862	20-May-2014
DP-315624	US	13/208727	12-Aug-2011	8477509	02-Jul-2013
DP-315624	US	13/208746	12-Aug-2011	8593821	26-Nov-2013
DP-315624	US	13/208769	12-Aug-2011	8599568	03-Dec-2013
DP-315624	US	13/208795	12-Aug-2011	8625293	07-Jan-2014
DP-315624	US	13/903335	28-May-2013	8982561	17-Mar-2015
DP-315624	US	13/905246	30-May-2013	8947860	03-Feb-2015
DP-315624	US	13/479888	24-May-2012	8724335	13-May-2014
DP-315624	US	13/479914	24-May-2012	8830687	09-Sep-2014
DP-315624	US	13/479983	24-May-2012	8749988	10-Jun-2014
DP-315624	US	14/620782	12-Feb-2015	9119288	25-Aug-2015
DP-315624	US	13/865458	18-Apr-2013	9013881	21-Apr-2015
DP-315624	US	14/024826	12-Sep-2013	9237683	12-Jan-2016
DP-315624	US	14/030739	18-Sep-2013	9173332	27-Oct-2015
DP-315629	US	11/788521	20-Apr-2007	7422480	09-Sep-2008
DP-315642	US	11/712720	01-Mar-2007	7598455	06-Oct-2009
DP-315646	US	11/827093	10-Jul-2007	7710236	04-May-2010
DP-315647	US	11/888611	01-Aug-2007	7864544	04-Jan-2011
DP-315650	US	11/724483	15-Mar-2007	7635212	27-Dec-2009
DP-315660	US	11/893591	16-Aug-2007	7588466	15-Sep-2009
DP-315811	US	11/706535	15-Feb-2007	7331801	19-Feb-2008
DP-315815	US	11/801500	10-May-2007	7701321	20-Apr-2010
DP-315818	US	11/906724	03-Oct-2007	7617066	10-Nov-2009
DP-315901	US	11/824022	29-Jun-2007	8391780	05-Mar-2013
DP-315915	US	12/866283	05-Aug-2010	8011936	06-Sep-2011
DP-315937	US	11/811900	12-Jun-2007	7753713	13-Jul-2010
DP-315952	US	11/796518	27-Apr-2007	7498896	03-Mar-2009
DP-315996	US	12/011327	25-Jan-2008	7876204	25-Jan-2011
DP-316007	US	11/821248	22-Jun-2007	7601019	13-Oct-2009
DP-316022	US	11/823687	28-Jun-2007	7485012	03-Feb-2009
DP-316075	US	11/901893	19-Sep-2007	7957333	07-Jun-2011
DP-316076	US	11/787590	17-Apr-2007	7805120	28-Sep-2010

DP-316159	US	12/284721	24-Sep-2008	8055445	08-Nov-2011
DP-316164	US	11/796807	30-Apr-2007	7970175	28-Jun-2011
DP-316166	US	12/082011	08-Apr-2008	8104173	31-Jan-2012
DP-316175	US	11/710820	26-Feb-2007	7365102	29-Apr-2008
DP-316201	US	11/879853	18-Jul-2007	8199198	12-Jun-2012
DP-316203	US	12/008372	10-Jan-2008	7889234	15-Feb-2011
DP-316226	US	11/801980	11-May-2007	7523679	28-Apr-2009
DP-316243	US	11/890038	03-Aug-2007	7679378	16-Mar-2010
DP-316275	US	11/895807	27-Aug-2007	8045500	25-Oct-2011
DP-316279	US	12/229240	21-Aug-2008	8013539	06-Sep-2011
DP-316298	US	11/881424	27-Jul-2007	8116711	14-Feb-2012
DP-316304	US	11/899878	07-Sep-2007	7658642	09-Feb-2010
DP-316332	US	11/890037	03-Aug-2007	7790983	07-Sep-2010
DP-316346	US	12/079850	27-Mar-2008	7632118	15-Dec-2009
DP-316372	US	11/895806	27-Aug-2007	7869533	11-Jan-2011
DP-316426	US	12/001820	13-Dec-2007	7534138	19-May-2009
DP-316472	US	11/899200	05-Sep-2007	7636064	22-Dec-2009
DP-316472	US	12/612128	04-Nov-2009	7864118	04-Jan-2011
DP-316492	US	11/998934	03-Dec-2007	7641511	05-Jan-2010
DP-316504	US	11/999883	07-Dec-2007	7692096	06-Apr-2010
DP-316505	US	11/986324	21-Nov-2007	7674972	09-Mar-2010
DP-316515	US	12/287898	14-Oct-2008	8008589	30-Aug-2011
DP-316550	US	12/148571	21-Apr-2008	7963787	21-Jun-2011
DP-316568	US	12/221456	01-Aug-2008	8046135	25-Oct-2011
DP-316574	US	12/001308	11-Dec-2007	7510407	31-Mar-2009
DP-316608	US	12/080589	04-Apr-2008	7901820	08-Mar-2011
DP-316634	US	12/220942	30-Jul-2008	8050460	01-Nov-2011
DP-316638	US	12/072794	28-Feb-2008	7639171	29-Dec-2009
DP-316677	US	12/011249	25-Jan-2008	7932835	26-Apr-2011
DP-316719	US	12/362712	30-Jan-2009	7903629	08-Mar-2011
DP-316731	US	11/983248	08-Nov-2007	7609530	27-Oct-2009
DP-316780	US	12/151653	08-May-2008	7708919	04-May-2010
DP-316810	US	12/231331	29-Aug-2008	8055020	08-Nov-2011
DP-316856	US	12/676175	03-Mar-2010	8446381	21-May-2013
DP-316905	US	12/150439	28-Apr-2008	7876106	25-Jan-2011
DP-316951	US	12/218711	17-Jul-2008	8190139	29-May-2012
DP-316953	US	12/231299	29-Aug-2008	8116524	14-Feb-2012
DP-316955	US	12/231550	29-Aug-2008	8155380	10-Apr-2012
DP-316986	US	12/082626	10-Apr-2008	8051877	08-Nov-2011
DP-316987	US	12/228447	13-Aug-2008	8047860	01-Nov-2011
DP-316998	US	12/732323	26-Mar-2010	8400261	19-Mar-2013
DP-317026	US	12/080451	03-Apr-2008	7749031	06-Jul-2010
DP-317028	US	12/082025	08-Apr-2008	7868251	11-Jan-2011
DP-317064	US	12/228446	13-Aug-2008	8027168	27-Sep-2011
DP-317066	US	12/287177	07-Oct-2008	8180527	15-May-2012
DP-317079	US	12/291481	10-Nov-2008	8022834	20-Sep-2011
DP-317090	US	12/080517	03-Apr-2008	8045337	25-Oct-2011
DP-317093	US	12/082334	10-Apr-2008	8053128	08-Nov-2011
DP-317186	US	12/229297	21-Aug-2008	8115676	14-Feb-2012
DP-317220	US	12/389659	20-Feb-2009	7914278	29-Mar-2011
DP-317232	US	12/151393	06-May-2008	7651346	26-Jan-2010
DP-317258	US	12/284741	25-Sep-2008	7752925	13-Jul-2010
DP-317275	US	12/284499	23-Sep-2008	9276267	01-Mar-2016
DP-317331	US	12/752187	01-Apr-2010	8421641	16-Apr-2013
DP-317333	US	12/432975	30-Apr-2009	8237455	07-Aug-2012
DP-317341	US	12/218083	11-Jul-2008	7896435	01-Mar-2011

DP-317367	US	12/221184	31-Jul-2008	7757997	20-Jul-2010
DP-317368	US	12/228352	12-Aug-2008	7658645	09-Feb-2010
DP-317376	US	12/152302	14-May-2008	7668690	23-Feb-2010
DP-317385	US	12/468336	19-May-2009	8198992	12-Jun-2012
DP-317435	US	12/423937	15-Apr-2009	8092061	10-Jan-2012
DP-317438	US	12/150414	28-Apr-2008	8107915	31-Jan-2012
DP-317470	US	12/228329	12-Aug-2008	7780485	24-Aug-2010
DP-317471	US	12/287873	14-Oct-2008	7635286	22-Dec-2009
DP-317484	US	12/291813	13-Nov-2008	8052492	08-Nov-2011
DP-317489	US	12/288145	16-Oct-2008	7806007	05-Oct-2010
DP-317490	US	12/334627	15-Dec-2008	8094001	10-Jan-2012
DP-317497	US	12/358773	23-Jan-2009	7727022	01-Jun-2010
DP-317499	US	12/370319	12-Feb-2009	8164911	24-Apr-2012
DP-317499	US	13/344807	06-Jan-2012	8681507	25-Mar-2014
DP-317499	US	14/100794	09-Dec-2013	9042119	26-May-2015
DP-317499	US	14/627060	20-Feb-2015	9854683	26-Dec-2017
DP-317504	US	12/286789	02-Oct-2008	7722416	25-May-2010
DP-317511	US	12/157662	12-Jun-2008	8158909	17-Apr-2012
DP-317524	US	12/468880	20-May-2009	8249798	21-Aug-2012
DP-317561	US	12/229938	28-Aug-2008	7641499	05-Jan-2010
DP-317580	US	12/082779	14-Apr-2008	7896952	01-Mar-2011
DP-317612	US	12/231724	05-Sep-2008	7727020	01-Jun-2010
DP-317663	US	12/433923	01-May-2009	8091960	10-Jan-2012
DP-317666	US	12/286776	02-Oct-2008	7960652	14-Jun-2011
DP-317675	US	12/220944	30-Jul-2008	7794274	14-Sep-2010
DP-317682	US	12/433011	30-Apr-2009	7880480	01-Feb-2011
DP-317683	US	12/433993	01-May-2009	8154394	10-Apr-2012
DP-317687	US	12/484547	15-Jun-2009	8011253	06-Sep-2011
DP-317687	US	13/191527	27-Jul-2011	8499644	06-Aug-2013
DP-317708	US	12/220425	24-Jul-2008	8184856	22-May-2012
DP-317764	US	12/287774	14-Oct-2008	8092245	10-Jan-2012
DP-317776	US	12/287103	06-Oct-2008	8049174	01-Nov-2011
DP-317777	US	12/276439	24-Nov-2008	8213928	03-Jul-2012
DP-317792	US	12/229939	28-Aug-2008	7810444	12-Oct-2010
DP-317793	US	13/455389	25-Apr-2012	8760886	24-Jun-2014
DP-317793	US	12/713650	26-Feb-2010	8264856	11-Sep-2012
DP-317793	US	14/460559	15-Aug-2014	9237685	12-Jan-2016
DP-317823	US	12/288881	24-Oct-2008	8004212	23-Aug-2011
DP-317832	US	12/290969	05-Nov-2008	8004400	23-Aug-2011
DP-317999	US	13/568201	07-Aug-2012	8456177	04-Jun-2013
DP-318052	US	12/433920	01-May-2009	7855030	21-Dec-2010
DP-318069	US	12/366146	05-Feb-2009	7891260	22-Feb-2011
DP-318136	US	13/071961	25-Mar-2011	8477513	02-Jul-2013
DP-318175	US	13/874506	01-May-2013	9042467	26-May-2015
DP-318293	US	12/788946	27-May-2010	8232017	31-Jul-2012
DP-318294	US	12/538964	11-Aug-2009	9692079	27-Jun-2017
DP-318295	US	12/788834	27-May-2010	9356307	31-May-2016
DP-318323	US	13/119307	16-Mar-2011	8604968	10-Dec-2013
DP-318323	US	14/073489	06-Nov-2013	9063230	23-Jun-2015
DP-318326	US	14/000763	21-Aug-2013	9271430	23-Feb-2016
DP-318345	US	12/698385	02-Feb-2010	8164045	24-Apr-2012
DP-318361	US	12/505088	17-Jul-2009	7726972	01-Jun-2010
DP-318380	US	12/477237	03-Jun-2009	8336351	25-Dec-2012
DP-318385	US	13/202817	23-Aug-2011	8660737	25-Feb-2014
DP-318415	US	12/560967	16-Sep-2009	8011598	06-Sep-2011
DP-318420	US	12/757119	09-Apr-2010	8224623	17-Jul-2012

DP-318476	US	12/630066	03-Dec-2009	8500287	06-Aug-2013
DP-318535	US	12/635756	11-Dec-2009	8124037	28-Feb-2012
DP-318536	US	12/564324	22-Sep-2009	7833674	16-Nov-2010
DP-318574	US	12/758218	12-Apr-2010	8457844	04-Jun-2013
DP-318574	US	13/761384	07-Feb-2013	8489283	16-Jul-2013
DP-318575	US	12/688164	15-Jan-2010	8377705	19-Feb-2013
DP-318582	US	12/883319	16-Sep-2010	8360803	29-Jan-2013
DP-318609	US	12/412470	27-Mar-2009	8022346	20-Sep-2011
DP-318642	US	12/908088	20-Oct-2010	8500194	06-Aug-2013
DP-318672	US	12/575675	08-Oct-2009	8266798	18-Sep-2012
DP-318677	US	12/636821	14-Dec-2009	8350684	08-Jan-2013
DP-318682	US	12/536675	06-Aug-2009	8363957	29-Jan-2013
DP-318684	US	12/610659	02-Nov-2009	7932772	26-Apr-2011
DP-318688	US	12/582116	20-Oct-2009	8207796	26-Jun-2012
DP-318724	US	12/838086	16-Jul-2010	8564423	22-Oct-2013
DP-318762	US	12/723741	15-Mar-2010	7980872	19-Jul-2011
DP-318769	US	12/708911	19-Feb-2010	8375575	19-Feb-2013
DP-318769	US	13/668461	05-Nov-2012	9456531	27-Sep-2016
DP-318808	US	12/619958	17-Nov-2009	7931479	26-Apr-2011
DP-318863	US	12/887872	22-Sep-2010	8836538	16-Sep-2014
DP-318890	US	12/575689	08-Oct-2009	7905755	15-Mar-2011
DP-318899	US	13/379760	21-Dec-2011	8598475	03-Dec-2013
DP-318913	US	12/642938	21-Dec-2009	8400323	19-Mar-2013
DP-318988	US	12/606245	27-Oct-2009	8438862	14-May-2013
DP-319012	US	13/640614	11-Oct-2012	8816995	26-Aug-2014
DP-319014	US	12/709672	22-Feb-2010	8259952	04-Sep-2012
DP-319015	US	13/393865	02-Mar-2012	8837140	16-Sep-2014
DP-319019	US	12/764618	21-Apr-2010	8105113	31-Jan-2012
DP-319082	US	12/768903	28-Apr-2010	8219286	10-Jul-2012
DP-319101	US	12/709722	22-Feb-2010	8259962	04-Sep-2012
DP-319155	US	12/841422	22-Jul-2010	8466438	18-Jun-2013
DP-319162	US	12/840578	21-Jul-2010	9112219	18-Aug-2015
DP-319164	US	12/981881	30-Dec-2010	8420278	16-Apr-2013
DP-319190	US	13/640684	11-Oct-2012	8833945	16-Sep-2014
DP-319199	US	12/837602	16-Jul-2010	8129951	06-Mar-2012
DP-319207	US	12/840526	21-Jul-2010	8277055	02-Oct-2012
DP-319208	US	13/714664	14-Dec-2012	8920993	30-Dec-2014
DP-319212	US	12/719584	08-Mar-2010	7955104	07-Jun-2011
DP-319213	US	12/787452	26-May-2010	8305773	06-Nov-2012
DP-319213	US	13/550856	17-Jul-2012	9125293	01-Sep-2015
DP-319219	US	12/721010	10-Mar-2010	8379769	19-Feb-2013
DP-319219	US	13/705527	05-Dec-2012	8599971	03-Dec-2013
DP-319226	US	13/017733	31-Jan-2011	8646176	11-Feb-2014
DP-319230	US	13/011956	24-Jan-2011	8713771	06-May-2014
DP-319240	US	12/750146	30-Mar-2010	8043106	25-Oct-2011
DP-319241	US	12/883838	16-Sep-2010	8181343	22-May-2012
DP-319280	US	13/992529	07-Jun-2013	9229531	05-Jan-2016
DP-319294	US	13/635451	17-Sep-2012	8757825	24-Jun-2014
DP-319308	US	13/635930	19-Sep-2012	9063560	23-Jun-2015
DP-319340	US	12/938724	03-Nov-2010	8641142	04-Feb-2014
DP-319364	US	13/175003	01-Jul-2011	8650351	11-Feb-2014
DP-319365	US	13/874688	01-May-2013	8573994	05-Nov-2013
DP-319384	US	13/097249	29-Apr-2011	8488303	16-Jul-2013
DP-319385	US	13/115342	25-May-2011	8267702	18-Sep-2012
DP-319424	US	12/938757	03-Nov-2010	8558713	15-Oct-2013
DP-319426	US	13/816496	12-Feb-2013	9111669	18-Aug-2015

DP-319431	US	13/810467	16-Jan-2013	9063327	23-Jun-2015
DP-319433	US	13/813212	30-Jan-2013	8813579	26-Aug-2014
DP-319434	US	13/808613	07-Jan-2013	9322724	26-Apr-2016
DP-319443	US	13/113286	23-May-2011	8287306	16-Oct-2012
DP-319450	US	13/009931	20-Jan-2011	8539283	17-Sep-2013
DP-319453	US	12/840576	21-Jul-2010	8362992	29-Jan-2013
DP-319456	US	12/980475	29-Dec-2010	8305678	06-Nov-2012
DP-319462	US	12/961099	06-Dec-2010	8333622	18-Dec-2012
DP-319467	US	12/881242	14-Sep-2010	8363325	29-Jan-2013
DP-319468	US	12/958767	02-Dec-2010	8279510	02-Oct-2012
DP-319475	US	12/980528	29-Dec-2010	8480798	09-Jul-2013
DP-319482	US	13/876487	28-Mar-2013	9052736	09-Jun-2015
DP-319484	US	13/315448	09-Dec-2011	8440358	14-May-2013
DP-319493	US	13/018841	01-Feb-2011	8235744	07-Aug-2012
DP-319503	US	14/123981	03-Dec-2013	8926107	06-Jan-2015
DP-319511	US	13/305096	28-Nov-2011	8832934	16-Sep-2014
DP-319518	US	13/072146	25-Mar-2011	8210864	03-Jul-2012
DP-319521	US	13/209932	15-Aug-2011	8548407	01-Oct-2013
DP-319528	US	13/072171	25-Mar-2011	8277243	02-Oct-2012
DP-319529	US	29/376111	01-Oct-2010	D669033	16-Oct-2012
DP-319551	US	13/113301	23-May-2011	8323046	04-Dec-2012
DP-319552	US	13/113313	23-May-2011	8333603	18-Dec-2012
DP-319578	US	12/913864	28-Oct-2010	8038455	18-Oct-2011
DP-319590	US	14/006379	20-Sep-2013	8833185	16-Sep-2014
DP-319641	US	13/983333	02-Aug-2013	9190224	17-Nov-2015
DP-319693	US	13/267505	06-Oct-2011	8442425	14-May-2013
DP-319700	US	13/179716	11-Jul-2011	8441394	14-May-2013
DP-319724	US	13/209993	15-Aug-2011	8387457	05-Mar-2013
DP-319740	US	14/002777	03-Sep-2013	9839152	05-Dec-2017
DP-319784	US	13/106402	12-May-2011	8408765	02-Apr-2013
DP-319829	US	14/344630	13-Mar-2014	9227513	05-Jan-2016
DP-319831	US	13/118816	31-May-2011	8559981	15-Oct-2013
DP-319837	US	13/178165	07-Jul-2011	8579240	12-Nov-2013
DP-319847	US	13/106433	12-May-2011	8398282	19-Mar-2013
DP-319852	US	14/117075	12-Nov-2013	9172177	27-Oct-2015
DP-319862	US	13/296580	15-Nov-2011	8197982	12-Jun-2012
DP-319902	US	13/428435	23-Mar-2012	8827744	09-Sep-2014
DP-319907	US	14/708526	11-May-2015	9725003	08-Aug-2017
DP-319916	US	13/288561	03-Nov-2011	8485853	16-Jul-2013
DP-319917	US	13/421932	16-Mar-2012	8585447	19-Nov-2013
DP-319920	US	13/301023	21-Nov-2011	9153834	06-Oct-2015
DP-319929	US	13/450881	19-Apr-2012	9379571	28-Jun-2016
DP-319929	US	15/159312	19-May-2016	9707853	18-Jul-2017
DP-319930	US	13/163993	20-Jun-2011	8379302	19-Feb-2013
DP-319949	US	13/399068	17-Feb-2012	8556666	15-Oct-2013
DP-319975	US	13/282555	27-Oct-2011	8746889	10-Jun-2014
DP-319979	US	13/314249	08-Dec-2011	8477401	02-Jul-2013
DP-319983	US	13/283988	28-Oct-2011	8610841	17-Dec-2013
DP-319993	US	13/336640	23-Dec-2011	8842043	23-Sep-2014
DP-320010	US	13/299410	18-Nov-2011	8680936	25-Mar-2014
DP-320014	US	13/297980	16-Nov-2011	8553334	08-Oct-2013
DP-320028	US	13/396138	14-Feb-2012	8613470	24-Dec-2013
DP-320037	US	13/477737	22-May-2012	8823641	02-Sep-2014
DP-320072	US	14/358370	15-May-2014	9280208	08-Mar-2016
DP-320102	US	14/097406	05-Dec-2013	9297897	29-Mar-2016
DP-320104	US	13/744463	18-Jan-2013	8947217	03-Feb-2015

DP-320105	US	13/450936	19-Apr-2012	8622774	07-Jan-2014
DP-320106	US	13/466378	07-Jun-2012	8758035	24-Jun-2014
DP-320115	US	13/364904	02-Feb-2012	8973989	10-Mar-2015
DP-320123	US	13/332725	21-Dec-2011	8412413	02-Apr-2013
DP-320134	US	13/332739	21-Dec-2011	8503088	06-Aug-2013
DP-320140	US	13/493124	11-Jun-2012	8784127	22-Jul-2014
DP-320152	US	13/650182	12-Oct-2012	9047518	02-Jun-2015
DP-320166	US	14/424054	26-Feb-2015	9690320	27-Jun-2017
DP-320187	US	13/535957	28-Jun-2012	8489316	16-Jul-2013
DP-320189	US	13/465066	07-May-2012	8584315	19-Nov-2013
DP-320227	US	14/420696	10-Feb-2015	9662983	30-May-2017
DP-320240	US	13/477122	22-May-2012	8659408	25-Feb-2014
DP-320244	US	13/749967	25-Jan-2013	9004954	14-Apr-2015
DP-320254	US	13/585200	14-Aug-2012	9126502	08-Sep-2015
DP-320278	US	13/761238	07-Feb-2013	9118911	25-Aug-2015
DP-320289	US	13/539553	02-Jul-2012	8884169	11-Nov-2014
DP-320335	US	13/710841	11-Dec-2012	9282655	08-Mar-2016
DP-320341	US	13/590578	21-Aug-2012	8925189	06-Jan-2015
DP-320354	US	13/926463	25-Jun-2013	9011186	21-Apr-2015
DP-320356	US	13/692301	03-Dec-2012	8882521	11-Nov-2014
DP-320357	US	13/714564	14-Dec-2012	9005490	14-Apr-2015
DP-320380	US	13/741838	15-Jan-2013	9039450	26-May-2015
DP-320390	US	13/928660	27-Jun-2013	9291184	22-Mar-2016
DP-320392	US	29/434360	12-Oct-2012	D680952	30-Apr-2013
DP-320393	US	29/437832	21-Nov-2012	D686984	30-Jul-2013
DP-320394	US	29/437833	21-Nov-2012	D686985	30-Jul-2013
DP-320402	US	13/617883	14-Sep-2012	9024804	05-May-2015
DP-320404	US	13/621960	18-Sep-2012	8712364	29-Apr-2014
DP-320443	US	13/584979	14-Aug-2012	9293745	22-Mar-2016
DP-320450	US	13/713554	13-Dec-2012	9017897	28-Apr-2015
DP-320505	US	13/571511	10-Aug-2012	9061603	23-Jun-2015
DP-320588	US	13/677369	15-Nov-2012	9236758	12-Jan-2016
DP-320589	US	13/788021	07-Mar-2013	8823551	02-Sep-2014
DP-320590	US	13/744618	18-Jan-2013	9304042	05-Apr-2016
DP-320651	US	13/895413	16-May-2013	9369001	14-Jun-2016
DP-320655	US	14/425948	04-Mar-2015	9715986	25-Jul-2017
DP-320672	US	14/426796	09-Mar-2015	9407038	02-Aug-2016
DP-320676	US	13/688765	29-Nov-2012	8977090	10-Mar-2015
DP-320680	US	13/795046	12-Mar-2013	8991045	31-Mar-2015
DP-320686	US	13/846983	19-Mar-2013	9042809	26-May-2015
DP-320701	US	14/045549	03-Oct-2013	9071016	30-Jun-2015
DP-320726	US	14/434853	10-Apr-2015	9391393	12-Jul-2016
DP-320765	US	13/961299	07-Aug-2013	9061591	23-Jun-2015
DP-320779	US	13/846965	19-Mar-2013	8992251	31-Mar-2015
DP-320804	US	13/855431	02-Apr-2013	9297892	29-Mar-2016
DP-320818	US	13/742660	16-Jan-2013	8926344	06-Jan-2015
DP-320821	US	13/874513	01-May-2013	8965599	24-Feb-2015
DP-320834	US	13/936266	08-Jul-2013	9622355	11-Apr-2017
DP-320835	US	13/874519	01-May-2013	8930045	06-Jan-2015
DP-320839	US	13/942023	15-Jul-2013	9616829	11-Apr-2017
DP-320851	US	14/108814	17-Dec-2013	9099809	04-Aug-2015
DP-320893	US	13/939531	11-Jul-2013	9114720	25-Aug-2015
DP-320900	US	14/470016	27-Aug-2014	9368910	14-Jun-2016
DP-320901	US	13/904300	29-May-2013	9112278	18-Aug-2015
DP-320902	US	14/036342	25-Sep-2013	9356300	31-May-2016
DP-320905	US	14/520696	22-Oct-2014	9455516	27-Sep-2016

DP-320909	US	14/261542	25-Apr-2014	9153879	06-Oct-2015
DP-320927	US	14/174157	06-Feb-2014	9118130	25-Aug-2015
DP-320937	US	14/013708	29-Aug-2013	9520601	13-Dec-2016
DP-320938	US	14/013784	29-Aug-2013	9698434	04-Jul-2017
DP-320939	US	14/013818	29-Aug-2013	9494024	15-Nov-2016
DP-320942	US	14/013838	29-Aug-2013	9647291	09-May-2017
DP-320944	US	14/783928	12-Oct-2015	9537243	03-Jan-2017
DP-320951	US	13/871210	26-Apr-2013	8992258	31-Mar-2015
DP-320953	US	14/032512	20-Sep-2013	9812717	07-Nov-2017
DP-320954	US	13/930057	28-Jun-2013	9054454	09-Jun-2015
DP-320966	US	13/905553	30-May-2013	9117573	25-Aug-2015
DP-320972	US	13/942850	16-Jul-2013	9099814	04-Aug-2015
DP-320976	US	14/249426	10-Apr-2014	9270055	23-Feb-2016
DP-320977	US	13/925227	24-Jun-2013	9190739	17-Nov-2015
DP-320979	US	14/065873	29-Oct-2013	9153878	06-Oct-2015
DP-320980	US	15/282343	30-Sep-2016	9960502	01-May-2018
DP-320983	US	14/150136	08-Jan-2014	9153889	06-Oct-2015
DP-320986	US	14/017384	04-Sep-2013	9289848	22-Mar-2016
DP-321001	US	14/105487	13-Dec-2013	9666880	30-May-2017
DP-321004	US	14/330217	14-Jul-2014	9172183	27-Oct-2015
DP-321018	US	15/029128	13-Apr-2016	9653845	16-May-2017
DP-321027	US	13/961998	08-Aug-2013	8978201	17-Mar-2015
DP-321040	US	14/421190	12-Feb-2015	9917434	13-Mar-2018
DP-321047	US	15/109866	06-Jul-2016	9928941	27-Mar-2018
DP-321051	US	13/955725	31-Jul-2013	9042717	26-May-2015
DP-321062	US	14/406868	10-Dec-2014	9270318	23-Feb-2016
DP-321084	US	14/048214	08-Oct-2013	9153899	06-Oct-2015
DP-321089	US	14/081092	15-Nov-2013	9379394	28-Jun-2016
DP-321090	US	14/081068	15-Nov-2013	9531020	27-Dec-2016
DP-321099	US	14/071978	05-Nov-2013	9366281	14-Jun-2016
DP-321112	US	14/101482	10-Dec-2013	9142907	22-Sep-2015
DP-321113	US	14/101488	10-Dec-2013	9362659	07-Jun-2016
DP-321134	US	14/036017	25-Sep-2013	9231124	05-Jan-2016
DP-321158	US	14/035101	24-Sep-2013	9231310	05-Jan-2016
DP-321160	US	14/097553	05-Dec-2013	9379530	28-Jun-2016
DP-321178	US	14/533500	05-Nov-2014	9397485	19-Jul-2016
DP-321184	US	14/321922	02-Jul-2014	9331413	03-May-2016
DP-321194	US	14/249433	10-Apr-2014	9476283	25-Oct-2016
DP-321203	US	14/098830	06-Dec-2013	9640829	02-May-2017
DP-321219	US	14/269701	05-May-2014	9321365	26-Apr-2016
DP-321256	US	14/425157	02-Mar-2015	9502911	22-Nov-2016
DP-321273	US	14/179947	13-Feb-2014	9300069	29-Mar-2016
DP-321292	US	14/159585	21-Jan-2014	9328596	03-May-2016
DP-321349	US	14/197404	05-Mar-2014	9568600	14-Feb-2017
DP-321391	US	14/109353	17-Dec-2013	9228882	05-Jan-2016
DP-321437	US	14/191563	27-Feb-2014	9356438	31-May-2016
DP-321444	US	14/269714	05-May-2014	9376028	28-Jun-2016
DP-321451	US	14/191636	27-Feb-2014	9227526	05-Jan-2016
DP-321457	US	14/250658	11-Apr-2014	9281619	08-Mar-2016
DP-321495	US	14/274857	12-May-2014	9543747	10-Jan-2017
DP-321495	US	15/225888	02-Aug-2016	9887529	06-Feb-2018
DP-321498	US	14/277894	15-May-2014	9310468	12-Apr-2016
DP-321517	US	14/270422	06-May-2014	9293812	22-Mar-2016
DP-321554	US	15/316596	06-Dec-2016	9843132	12-Dec-2017
DP-321566	US	14/638387	04-Mar-2015	9577367	21-Feb-2017
DP-321568	US	14/445569	29-Jul-2014	9541637	10-Oct-2017

DP-321587	US	14/472910	29-Aug-2014	9621874	11-Apr-2017
DP-321630	US	14/463688	20-Aug-2014	9300085	29-Mar-2016
DP-321639	US	14/852719	14-Sep-2015	9728896	08-Aug-2017
DP-321646	US	14/476893	04-Sep-2014	9362676	07-Jun-2016
DP-321651	US	14/454754	08-Aug-2014	9594155	14-Mar-2017
DP-321654	US	14/570451	15-Dec-2014	9450226	20-Sep-2016
DP-321668	US	14/491192	19-Sep-2014	9784820	10-Oct-2017
DP-321674	US	14/694310	23-Apr-2015	9407026	02-Aug-2016
DP-321681	US	14/852713	14-Sep-2015	9590348	07-Mar-2017
DP-321687	US	14/488741	17-Sep-2014	9506803	29-Nov-2016
DP-321689	US	14/499990	29-Sep-2014	9664775	30-May-2017
DP-321718	US	14/497570	26-Sep-2014	9395538	19-Jul-2016
DP-321737	US	14/486176	15-Sep-2014	9404774	02-Aug-2016
DP-321740	US	14/548380	20-Nov-2014	9379486	28-Jun-2016
DP-321761	US	14/578646	22-Dec-2014	9504172	22-Nov-2016
DP-321792	US	14/563053	08-Dec-2014	9472885	18-Oct-2016
DP-321818	US	14/514555	15-Oct-2014	9508344	29-Nov-2016
DP-321833	US	14/662902	19-Mar-2015	9559379	31-Jan-2017
DP-321873	US	14/952025	25-Nov-2015	9911056	06-Mar-2018
DP-321878	US	14/953848	30-Nov-2015	9862318	09-Jan-2018
DP-321888	US	15/064695	09-Mar-2016	9711898	18-Jul-2017
DP-321929	US	14/700682	30-Apr-2015	9680332	13-Jun-2017
DP-321951	US	14/592408	08-Jan-2015	9469176	18-Oct-2016
DP-321954	US	14/602402	22-Jan-2015	9691514	27-Jun-2017
DP-321956	US	11/282974	18-Nov-2005	7233769	19-Jun-2007
DP-321956	US	11/467112	24-Aug-2006	8290173	16-Oct-2012
DP-321956	US	11/747080	10-May-2007	8208654	26-Jun-2012
DP-321956	US	11/933004	31-Oct-2007	7937118	03-May-2011
DP-321956	US	10/189091	03-Jul-2002	7076204	11-Jul-2006
DP-321956	US	10/691899	22-Oct-2003	6987947	17-Jan-2006
DP-321956	US	11/266900	04-Nov-2005	7359671	15-Apr-2008
DP-321956	US	11/279548	12-Apr-2006	7603080	13-Oct-2009
DP-321962	US	13/069046	22-Mar-2011	9167057	20-Oct-2015
DP-321964	US	14/693335	22-Apr-2015	9592528	14-Mar-2017
DP-321991	US	15/011970	01-Feb-2016	9537249	03-Jan-2017
DP-321993	US	15/202724	06-Jul-2016	9711902	18-Jul-2017
DP-322002	US	14/616943	09-Feb-2015	9568344	14-Feb-2017
DP-322006	US	14/744128	19-Jun-2015	9726514	08-Aug-2017
DP-322037	US	15/268728	19-Sep-2016	9619420	11-Apr-2017
DP-322037	US	14/487947	16-Sep-2014	9460037	04-Oct-2016
DP-322037	US	15/257096	06-Sep-2016	9645962	09-May-2017
DP-322101	US	14/751413	26-Jun-2015	9475461	25-Oct-2016
DP-322118	US	14/664420	20-Mar-2015	9810782	07-Nov-2017
DP-322119	US	15/083623	29-Mar-2016	9698501	04-Jul-2017
DP-322138	US	14/663052	19-Mar-2015	9910151	06-Mar-2018
DP-322139	US	14/801422	16-Jul-2015	9693459	27-Jun-2017
DP-322142	US	14/735406	10-Jun-2015	9350116	24-May-2016
DP-322143	US	14/818429	05-Aug-2015	9455523	27-Sep-2016
DP-322154	US	14/687375	15-Apr-2015	9499202	22-Nov-2016
DP-322156	US	14/730586	04-Jun-2015	9618936	11-Apr-2017
DP-322157	US	14/701796	01-May-2015	9555807	31-Jan-2017
DP-322213	US	14/854929	15-Sep-2015	9470777	18-Oct-2016
DP-322214	US	14/932261	04-Nov-2015	9472899	18-Oct-2016
DP-322220	US	14/932230	04-Nov-2015	9431771	30-Aug-2016
DP-322224	US	14/862672	23-Sep-2015	9768554	19-Sep-2017
DP-322228	US	14/830786	20-Aug-2015	9705228	11-Jul-2017

DP-322230	US	14/842392	01-Sep-2015	9781361	03-Oct-2017
DP-322233	US	15/084856	30-Mar-2016	10023120	17-Jul-2018
DP-322234	US	14/851223	11-Sep-2015	9608357	28-Mar-2017
DP-322235	US	14/746019	22-Jun-2015	9493083	15-Nov-2016
DP-322248	US	14/843215	02-Sep-2015	9590367	07-Mar-2017
DP-322255	US	14/873815	02-Oct-2015	9983301	29-May-2018
DP-322264	US	15/278169	28-Sep-2016	9923327	20-Mar-2018
DP-322288	US	14/748522	24-Jun-2015	9493118	15-Nov-2016
DP-322291	US	14/748530	24-Jun-2015	9727056	08-Aug-2017
DP-322292	US	14/798937	14-Jul-2015	9588517	07-Mar-2017
DP-322294	US	14/838826	28-Aug-2015	9604639	28-Mar-2017
DP-322295	US	14/815343	31-Jul-2015	9594378	14-Mar-2017
DP-322303	US	14/748551	24-Jun-2015	9637120	02-May-2017
DP-322306	US	14/974780	18-Dec-2015	9750151	29-Aug-2017
DP-322338	US	14/972768	17-Dec-2015	9537227	03-Jan-2017
DP-322345	US	15/208841	13-Jul-2016	9787031	10-Oct-2017
DP-322349	US	14/972738	17-Dec-2015	10082168	25-Sep-2018
DP-322355	US	29/535850	11-Aug-2015	D773964	13-Dec-2016
DP-322356	US	29/535855	11-Aug-2015	D802518	14-Nov-2017
DP-322372	US	14/874760	05-Oct-2015	9914475	13-Mar-2018
DP-322379	US	15/335948	27-Oct-2016	9762003	12-Sep-2017
DP-322431	US	14/976420	21-Dec-2015	9975437	22-May-2018
DP-322433	US	15/386438	21-Dec-2016	10032545	24-Jul-2018
DP-322435	US	14/880376	12-Oct-2015	9541639	10-Jan-2017
DP-322437	US	15/189576	22-Jun-2016	9627785	18-Apr-2017
DP-322446	US	14/955139	01-Dec-2015	9783130	10-Oct-2017
DP-322448	US	15/084880	30-Mar-2016	9798054	24-Oct-2017
DP-322455	US	14/967819	14-Dec-2015	9863866	09-Jan-2018
DP-322464	US	15/368741	05-Dec-2016	10031624	24-Jul-2018
DP-322502	US	11/818777	15-Jun-2007	7438610	21-Oct-2008
DP-322530	US	15/175494	07-Jun-2016	9836977	05-Dec-2017
DP-322537	US	15/011957	01-Feb-2016	9762001	12-Sep-2017
DP-322538	US	15/375261	12-Dec-2016	10021469	10-Jul-2018
DP-322543	US	14/962092	08-Dec-2015	9952319	24-Apr-2018
DP-322561	US	15/007283	27-Jan-2016	9764741	19-Sep-2017
DP-322564	US	15/086815	31-Mar-2016	10037696	31-Jul-2018
DP-322565	US	15/146504	04-May-2016	9864374	09-Jan-2018
DP-322570	US	15/159371	19-May-2016	10017134	10-Jul-2018
DP-322577	US	15/204036	07-Jul-2016	9953476	24-Apr-2018
DP-322580	US	15/076951	22-Mar-2016	9898008	20-Feb-2018
DP-322583	US	15/083538	29-Mar-2016	9671785	06-Jun-2017
DP-322588	US	15/154192	13-May-2016	9910440	06-Mar-2018
DP-322591	US	15/160655	20-May-2016	9989966	05-Jun-2018
DP-322597	US	15/336942	28-Oct-2016	10025311	17-Jul-2018
DP-322617	US	15/196326	29-Jun-2016	9787002	10-Oct-2017
DP-322638	US	15/237746	16-Aug-2016	9840232	12-Dec-2017
DP-322642	US	14/977874	22-Dec-2015	9841813	12-Dec-2017
DP-322664	US	15/177763	09-Jun-2016	9653846	16-May-2017
DP-322685	US	15/181915	14-Jun-2016	9840253	12-Dec-2017
DP-322687	US	15/177985	09-Jun-2016	9842500	12-Dec-2017
DP-322695	US	15/159278	19-May-2016	9634435	25-Apr-2017
DP-322730	US	15/182748	15-Jun-2016	9634445	25-Apr-2017
DP-322750	US	15/154076	13-May-2016	10019014	10-Jul-2018
DP-322780	US	15/469894	27-Mar-2017	9915003	13-Mar-2018
DP-322807	US	15/177910	09-Jun-2016	9667000	30-May-2017
DP-322808	US	15/159346	19-May-2016	9758114	12-Sep-2017

DP-322814	US	15/095515	11-Apr-2016	9653859	16-May-2017
DP-322841	US	15/208855	13-Jul-2016	9755362	05-Sep-2017
DP-322865	US	15/218128	25-Jul-2016	9960550	01-May-2018
DP-322867	US	15/603950	24-May-2017	10090622	02-Oct-2018
DP-322898	US	15/227642	03-Aug-2016	9692153	27-Jun-2017
DP-322919	US	15/413589	24-Jan-2017	9899128	20-Feb-2018
DP-322926	US	15/296321	18-Oct-2016	10090614	02-Oct-2018
DP-322934	US	15/499491	27-Apr-2017	9929508	27-Mar-2018
DP-322945	US	15/233310	10-Aug-2016	9705225	11-Jul-2017
DP-322957	US	15/229997	05-Aug-2016	9870001	16-Jan-2018
DP-322989	US	15/264121	13-Sep-2016	9944318	17-Apr-2018
DP-323073	US	15/268695	19-Sep-2016	9927810	27-Mar-2018
DP-323120	US	15/369006	05-Dec-2016	9853396	26-Dec-2017
DP-323127	US	15/280522	29-Sep-2016	10090608	02-Oct-2018
DP-323130	US	15/336923	28-Oct-2016	10008786	26-Jun-2018
DP-323143	US	15/427725	08-Feb-2017	9780487	03-Oct-2017
DP-323143	US	15/687627	28-Aug-2017	9912101	06-Mar-2018
DP-323193	US	15/382990	19-Dec-2016	9893479	13-Feb-2018
DP-323207	US	15/292754	13-Oct-2016	10014583	03-Jul-2018
DP-323239	US	15/339175	31-Oct-2016	10026321	17-Jul-2018
DP-323247	US	15/375464	12-Dec-2016	9928939	27-Mar-2018
DP-323248	US	15/256784	06-Sep-2016	10089875	02-Oct-2018
DP-323273	US	15/371635	07-Dec-2016	10078334	18-Sep-2018
DP-323275	US	15/262467	12-Sep-2016	10031231	24-Jul-2018
DP-323290	US	15/414693	25-Jan-2017	9865968	09-Jan-2018
DP-323291	US	15/422552	02-Feb-2017	9793639	17-Oct-2017
DP-323292	US	15/414701	25-Jan-2017	9899758	20-Feb-2018
DP-323312	US	15/499463	27-Apr-2017	10021797	10-Jul-2018
DP-323546	US	15/490249	18-Apr-2017	9901018	20-Feb-2018
DP-323562	US	15/467659	23-Mar-2017	9978707	22-May-2018
DP-323588	US	15/432001	14-Feb-2017	9917381	13-Mar-2018
DP-323606	US	15/465296	21-Mar-2017	10037472	31-Jul-2018
DP-323722	US	15/584779	02-May-2017	10086809	02-Oct-2018
DP-323724	US	15/436894	20-Feb-2017	9906003	27-Feb-2018
DP-323752	US	15/604812	25-May-2017	9991620	05-Jun-2018
DP-323753	US	15/612059	02-Jun-2017	9917402	13-Mar-2018
DP-323783	US	15/647666	12-Jul-2017	10020599	10-Jul-2018
DP-323800	US	15/467611	23-Mar-2017	10025316	17-Jul-2018
DP-323802	US	15/626701	19-Jun-2017	9954347	24-Apr-2018
DP-323872	US	15/653609	19-Jul-2017	10028391	17-Jul-2018
DP-323877	US	15/619985	12-Jun-2017	9929509	27-Mar-2018
DP-324167	US	15/687590	28-Aug-2017	9979167	22-May-2018
DP-324204	US	15/817366	20-Nov-2017	10079446	18-Sep-2018
DP-324282	US	15/728079	09-Oct-2017	10017659	10-Jul-2018
H-198409	US	09/238538	27-Jan-1999	6168445	02-Jan-2001
H-199017	US	09/237313	26-Jan-1999	6430120	06-Aug-2002
H-200116	US	09/178236	23-Oct-1998	6099154	08-Aug-2000
H-201370	US	09/257841	25-Feb-1999	6087976	11-Jul-2000
H-201538	US	09/237312	26-Jan-1999	6018131	25-Jan-2000
H-201627	US	09/237309	26-Jan-1999	6323487	27-Nov-2001
H-201832	US	09/381314	16-Sep-1999	6236004	22-May-2001
H-201876	US	09/187701	06-Nov-1998	6161822	19-Dec-2000
H-202237	US	09/329642	10-Jun-1999	6094160	25-Jul-2000
H-203138	US	09/154290	16-Sep-1998	6006881	28-Dec-1999
H-203561	US	09/802478	09-Mar-2001	6481701	19-Nov-2002
H-203642	US	09/190729	09-Nov-1998	6157881	05-Dec-2000

H-203644	US	09/188988	09-Nov-1998	5969599	19-Oct-1999
H-203645	US	09/188487	09-Nov-1998	5964817	12-Oct-1999
H-203651	US	09/280945	29-Mar-1999	6222442	24-Apr-2001
H-203655	US	09/192523	16-Nov-1998	6219606	17-Apr-2001
H-203820	US	09/365084	30-Jul-1999	6186486	13-Feb-2001
H-203827	US	09/197878	23-Nov-1998	6430489	06-Aug-2002
H-203927	US	09/404514	23-Sep-1999	6166454	26-Dec-2000
H-203932	US	09/349214	06-Jul-1999	6898498	24-May-2005
H-204086	US	09/438867	12-Nov-1999	6139351	31-Oct-2000
H-204209	US	09/404482	23-Sep-1999	6270115	07-Aug-2001
H-204286	US	09/286326	05-Apr-1999	6356854	12-Mar-2002
H-204313	US	09/634071	08-Aug-2000	6414265	02-Jul-2002
H-204534	US	09/241171	01-Feb-1999	6230494	15-May-2001
H-204664	US	09/707605	08-Nov-2000	6392166	21-May-2002
H-204666	US	09/309848	11-May-1999	6151540	21-Nov-2000
H-204684	US	09/252415	18-Feb-1999	6420797	16-Jul-2002
H-204709	US	09/448752	24-Nov-1999	6220876	24-Apr-2001
H-204873	US	09/431345	29-Oct-1999	6402321	11-Jun-2002
H-204996	US	09/266378	11-Mar-1999	6043937	28-Mar-2000
H-205202	US	09/307856	10-May-1999	6236308	22-May-2001

PTO/SB/81 (01-09)
Approved for use through 03/31/2021. OMB 0651-0035
U.S. Patent and Trademark Office, U.S. DEPARTMENT OF COMMERCE
Under the Paperwork Reduction Act of 1995, no persons are required to respond to a collection of information unless it displays a valid OMB control number.

POWER OF ATTORNEY OR REVOCATION OF POWER OF ATTORNEY WITH A NEW POWER OF ATTORNEY AND CHANGE OF CORRESPONDENCE ADDRESS

Application Number	14/487,947
Filing Date	2014-09-16
First Named Inventor	Robert Voto, et al.
Title	Flexible Mobile Device Connectivity to Automotive Systems with USB Hubs
Art Unit	2181
Examiner Name	Ernest Unelus
Attorney Docket Number	7021.145US1 (formerly DP-322037)

I hereby revoke all previous powers of attorney given in the above-identified application.

☐ A Power of Attorney is submitted herewith.

OR

☒ I hereby appoint Practitioner(s) associated with the following Customer Number as my/our attorney(s) or agent(s) to prosecute the application identified above, and to transact all business in the United States Patent and Trademark Office connected therewith:

171991

OR

☐ I hereby appoint Practitioner(s) named below as my/our attorney(s) or agent(s) to prosecute the application identified above, and to transact all business in the United States Patent and Trademark Office connected therewith:

Practitioner(s) Name	Registration Number

Please recognize or change the correspondence address for the above-identified application to:

☒ The address associated with the above-mentioned Customer Number.

OR

☐ The address associated with Customer Number:

OR

☐ Firm or Individual Name					
Address					
City		State		Zip	
Country					
Telephone		Email			

I am the:

☐ Applicant/Inventor.

OR

☒ Assignee of record of the entire interest. See 37 CFR 3.71.
Statement under 37 CFR 3.73(b) (Form PTO/SB/96) submitted herewith or filed on _____.

SIGNATURE of Applicant or Assignee of Record

Signature	DocuSigned by: David Ford 61EA80D0BF154AC...	Date	May 5, 2022
Name	David J. Ford	Telephone	248-813-1234
Title and Company	Assistant Secretary, Aptiv Technologies Limited		

NOTE: Signatures of all the inventors or assignees of record of the entire interest or their representative(s) are required. Submit multiple forms if more than one signature is required, see below*.

☒ *Total of 1 forms are submitted.

This collection of information is required by 37 CFR 1.31, 1.32 and 1.33. The information is required to obtain or retain a benefit by the public which is to file (and by the USPTO to process) an application. Confidentiality is governed by 35 U.S.C. 122 and 37 CFR 1.11 and 1.14. This collection is estimated to take 3 minutes to complete, including gathering, preparing, and submitting the completed application form to the USPTO. Time will vary depending upon the individual case. Any comments on the amount of time you require to complete this form and/or suggestions for reducing this burden, should be sent to the Chief Information Officer, U.S. Patent and Trademark Office, U.S. Department of Commerce, P.O. Box 1450, Alexandria, VA 22313-1450. DO NOT SEND FEES OR COMPLETED FORMS TO THIS ADDRESS. **SEND TO: Commissioner for Patents, P.O. Box 1450, Alexandria, VA 22313-1450.**

If you need assistance in completing the form, call 1-800-PTO-9199 and select option 2.

Privacy Act Statement

The Privacy Act of 1974 (P.L. 93-579) requires that you be given certain information in connection with your submission of the attached form related to a patent application or patent. Accordingly, pursuant to the requirements of the Act, please be advised that: (1) the general authority for the collection of this information is 35 U.S.C. 2(b)(2); (2) furnishing of the information solicited is voluntary; and (3) the principal purpose for which the information is used by the U.S. Patent and Trademark Office is to process and/or examine your submission related to a patent application or patent. If you do not furnish the requested information, the U.S. Patent and Trademark Office may not be able to process and/or examine your submission, which may result in termination of proceedings or abandonment of the application or expiration of the patent.

The information provided by you in this form will be subject to the following routine uses:

1. The information on this form will be treated confidentially to the extent allowed under the Freedom of Information Act (5 U.S.C. 552) and the Privacy Act (5 U.S.C 552a). Records from this system of records may be disclosed to the Department of Justice to determine whether disclosure of these records is required by the Freedom of Information Act.
2. A record from this system of records may be disclosed, as a routine use, in the course of presenting evidence to a court, magistrate, or administrative tribunal, including disclosures to opposing counsel in the course of settlement negotiations.
3. A record in this system of records may be disclosed, as a routine use, to a Member of Congress submitting a request involving an individual, to whom the record pertains, when the individual has requested assistance from the Member with respect to the subject matter of the record.
4. A record in this system of records may be disclosed, as a routine use, to a contractor of the Agency having need for the information in order to perform a contract. Recipients of information shall be required to comply with the requirements of the Privacy Act of 1974, as amended, pursuant to 5 U.S.C. 552a(m).
5. A record related to an International Application filed under the Patent Cooperation Treaty in this system of records may be disclosed, as a routine use, to the International Bureau of the World Intellectual Property Organization, pursuant to the Patent Cooperation Treaty.
6. A record in this system of records may be disclosed, as a routine use, to another federal agency for purposes of National Security review (35 U.S.C. 181) and for review pursuant to the Atomic Energy Act (42 U.S.C. 218(c)).
7. A record from this system of records may be disclosed, as a routine use, to the Administrator, General Services, or his/her designee, during an inspection of records conducted by GSA as part of that agency's responsibility to recommend improvements in records management practices and programs, under authority of 44 U.S.C. 2904 and 2906. Such disclosure shall be made in accordance with the GSA regulations governing inspection of records for this purpose, and any other relevant (i.e., GSA or Commerce) directive. Such disclosure shall not be used to make determinations about individuals.
8. A record from this system of records may be disclosed, as a routine use, to the public after either publication of the application pursuant to 35 U.S.C. 122(b) or issuance of a patent pursuant to 35 U.S.C. 151. Further, a record may be disclosed, subject to the limitations of 37 CFR 1.14, as a routine use, to the public if the record was filed in an application which became abandoned or in which the proceedings were terminated and which application is referenced by either a published application, an application open to public inspection or an issued patent.
9. A record from this system of records may be disclosed, as a routine use, to a Federal, State, or local law enforcement agency, if the USPTO becomes aware of a violation or potential violation of law or regulation.

Electronic Acknowledgement Receipt

EFS ID:	45675269
Application Number:	14487947
International Application Number:	
Confirmation Number:	2147
Title of Invention:	FLEXIBLE MOBILE DEVICE CONNECTIVITY TO AUTOMOTIVE SYSTEMS WITH USB HUBS
First Named Inventor/Applicant Name:	Robert Voto
Customer Number:	279
Filer:	Robert James Myers/LaTasha Hill
Filer Authorized By:	Robert James Myers
Attorney Docket Number:	40651-163154
Receipt Date:	10-MAY-2022
Filing Date:	16-SEP-2014
Time Stamp:	12:43:09
Application Type:	Utility under 35 USC 111(a)

Payment information:

Submitted with Payment	no

File Listing:

Document Number	Document Description	File Name	File Size(Bytes)/ Message Digest	Multi Part /.zip	Pages (if appl.)
1	Power of Attorney	7021145US1_POA.pdf	175437 a42a37d24aae059403cb46244df05917acfe143c	no	2

Warnings:

Information:					
2	Assignee showing of ownership per 37 CFR 3.73	7021145US1_STATEMENT373.pdf	151193 563bfecce4b1a2659c448e4fec4df9d276873977	no	2
Warnings:					
Information:					
3	Miscellaneous Incoming Letter	7021145US1_SUPP-SHEET.pdf	11581 a8194bb1e31934b1685d6c63e0188bf3a9d7b9a6	no	1
Warnings:					
Information:					
			Total Files Size (in bytes):	338211	

This Acknowledgement Receipt evidences receipt on the noted date by the USPTO of the indicated documents, characterized by the applicant, and including page counts, where applicable. It serves as evidence of receipt similar to a Post Card, as described in MPEP 503.

<u>New Applications Under 35 U.S.C. 111</u>
If a new application is being filed and the application includes the necessary components for a filing date (see 37 CFR 1.53(b)-(d) and MPEP 506), a Filing Receipt (37 CFR 1.54) will be issued in due course and the date shown on this Acknowledgement Receipt will establish the filing date of the application.
<u>National Stage of an International Application under 35 U.S.C. 371</u>
If a timely submission to enter the national stage of an international application is compliant with the conditions of 35 U.S.C. 371 and other applicable requirements a Form PCT/DO/EO/903 indicating acceptance of the application as a national stage submission under 35 U.S.C. 371 will be issued in addition to the Filing Receipt, in due course.
<u>New International Application Filed with the USPTO as a Receiving Office</u>
If a new international application is being filed and the international application includes the necessary components for an international filing date (see PCT Article 11 and MPEP 1810), a Notification of the International Application Number and of the International Filing Date (Form PCT/RO/105) will be issued in due course, subject to prescriptions concerning national security, and the date shown on this Acknowledgement Receipt will establish the international filing date of the application.

PTO/SB/96 (07-18)
Approved for use through 11/30/2020. OMB 0651-0031
U.S. Patent and Trademark Office; U.S. DEPARTMENT OF COMMERCE
Under the Paperwork Reduction Act of 1995, no persons are required to respond to a collection of information unless it displays a valid OMB control number.

STATEMENT UNDER 37 CFR 3.73(b)

Applicant/Patent Owner: Aptiv Technologies Limited

Application No./Patent No.: 14/487,947 / 9,460,037 Filed/Issue Date: 2014-09-16 / 2016-10-04

Titled: Flexible Mobile Device Connectivity to Automotive Systems with USB Hubs

Aptiv Technologies Limited, a Company
(Name of Assignee) (Type of Assignee, e.g., corporation, partnership, university, government agency, etc.

states that it is:

1. [X] the assignee of the entire right, title, and interest in;

2. [ ] an assignee of less than the entire right, title, and interest in
(The extent (by percentage) of its ownership interest is _____ %); or

3. [ ] the assignee of an undivided interest in the entirety of (a complete assignment from one of the joint inventors was made)

the patent application/patent identified above, by virtue of either:

A. [ ] An assignment from the inventor(s) of the patent application/patent identified above. The assignment was recorded in the United States Patent and Trademark Office at Reel_____, Frame_____, or a copy* is attached.

OR

B. [X] A chain of title from the inventor(s), of the patent application/patent identified above, to the current assignee as follows:

1. From: Voto, Robert; Veda, Shyambabu; Petku, Craig To: Unwired Technology LLC

__The document was recorded in the United States Patent and Trademark Office at
Reel 033785, Frame 0399, or a copy* is attached.

2. From: Unwired Technology LLC To: Delphi Data Connectivity US LLC

The document was recorded in the United States Patent and Trademark Office at
Reel 038014, Frame 0604, or a copy* is attached.

3. From: Delphi Data Connectivity US LLC To: Delphi Technologies, Inc.

The document was recorded in the United States Patent and Trademark Office at
Reel 038035, Frame 0127, or a copy* is attached.

[X] Additional documents in the chain of title are listed on a supplemental sheet(s).

[ ] *As required by 37 CFR 3.73(b)(1)(i), if a copy/copies is/are attached, the documentary evidence of the chain of title from the original owner to the assignee was, or concurrently is being, submitted for recordation pursuant to 37 CFR 3.11.

[NOTE: A separate copy (*i.e.*, a true copy of the original assignment document(s)) must be submitted to Assignment Division in accordance with 37 CFR Part 3, to record the assignment in the records of the USPTO. See MPEP 302.]

The undersigned (whose title is supplied below) is authorized to act on behalf of the assignee.

DocuSigned by:
David Ford
61EA80D0BF154AC...
Signature

5/5/2022
Date

David Ford
Printed or Typed Name

Asst. Secretary
Title or Registration Number

This collection of information is required by 37 CFR 3.73(b). The information is required to obtain or retain a benefit by the public which is to file (and by the USPTO to process) an application. Confidentiality is governed by 35 U.S.C. 122 and 37 CFR 1.11 and 1.14. This collection is estimated to take 12 minutes to complete, including gathering, preparing, and submitting the completed application form to the USPTO. Time will vary depending upon the individual case. Any comments on the amount of time you require to complete this form and/or suggestions for reducing this burden, should be sent to the Chief Information Officer, U.S. Patent and Trademark Office, U.S. Department of Commerce, P.O. Box 1450, Alexandria, VA 22313-1450. DO NOT SEND FEES OR COMPLETED FORMS TO THIS ADDRESS. **SEND TO: Commissioner for Patents, P.O. Box 1450, Alexandria, VA 22313-1450.**

If you need assistance in completing the form, call 1-800-PTO-9199 and select option 2.

Privacy Act Statement

The **Privacy Act of 1974 (P.L. 93-579)** requires that you be given certain information in connection with your submission of the attached form related to a patent application or patent. Accordingly, pursuant to the requirements of the Act, please be advised that: (1) the general authority for the collection of this information is 35 U.S.C. 2(b)(2); (2) furnishing of the information solicited is voluntary; and (3) the principal purpose for which the information is used by the U.S. Patent and Trademark Office is to process and/or examine your submission related to a patent application or patent. If you do not furnish the requested information, the U.S. Patent and Trademark Office may not be able to process and/or examine your submission, which may result in termination of proceedings or abandonment of the application or expiration of the patent.

The information provided by you in this form will be subject to the following routine uses:

1. The information on this form will be treated confidentially to the extent allowed under the Freedom of Information Act (5 U.S.C. 552) and the Privacy Act (5 U.S.C 552a). Records from this system of records may be disclosed to the Department of Justice to determine whether disclosure of these records is required by the Freedom of Information Act.
2. A record from this system of records may be disclosed, as a routine use, in the course of presenting evidence to a court, magistrate, or administrative tribunal, including disclosures to opposing counsel in the course of settlement negotiations.
3. A record in this system of records may be disclosed, as a routine use, to a Member of Congress submitting a request involving an individual, to whom the record pertains, when the individual has requested assistance from the Member with respect to the subject matter of the record.
4. A record in this system of records may be disclosed, as a routine use, to a contractor of the Agency having need for the information in order to perform a contract. Recipients of information shall be required to comply with the requirements of the Privacy Act of 1974, as amended, pursuant to 5 U.S.C. 552a(m).
5. A record related to an International Application filed under the Patent Cooperation Treaty in this system of records may be disclosed, as a routine use, to the International Bureau of the World Intellectual Property Organization, pursuant to the Patent Cooperation Treaty.
6. A record in this system of records may be disclosed, as a routine use, to another federal agency for purposes of National Security review (35 U.S.C. 181) and for review pursuant to the Atomic Energy Act (42 U.S.C. 218(c)).
7. A record from this system of records may be disclosed, as a routine use, to the Administrator, General Services, or his/her designee, during an inspection of records conducted by GSA as part of that agency's responsibility to recommend improvements in records management practices and programs, under authority of 44 U.S.C. 2904 and 2906. Such disclosure shall be made in accordance with the GSA regulations governing inspection of records for this purpose, and any other relevant (*i.e.*, GSA or Commerce) directive. Such disclosure shall not be used to make determinations about individuals.
8. A record from this system of records may be disclosed, as a routine use, to the public after either publication of the application pursuant to 35 U.S.C. 122(b) or issuance of a patent pursuant to 35 U.S.C. 151. Further, a record may be disclosed, subject to the limitations of 37 CFR 1.14, as a routine use, to the public if the record was filed in an application which became abandoned or in which the proceedings were terminated and which application is referenced by either a published application, an application open to public inspection or an issued patent.
9. A record from this system of records may be disclosed, as a routine use, to a Federal, State, or local law enforcement agency, if the USPTO becomes aware of a violation or potential violation of law or regulation.

Supplemental Sheet for Statement Under 37 CFR 3.73(b)

Applicant/Patent Owner: Aptiv Technologies Limited

Application No./Patent No. 4/487,947 / 9,460,037

Filed /Issue Date 2014-09-16 / 2016-10-04

Titled: Flexible Mobile Device Connectivity to Automotive Systems with USB Hubs

4. From: Delphi Technologies, Inc. To: Aptiv Technologies Limited

   The document was recorded in the United States Patent and Trademark office at

   Reel 047143, Frame 0874

UNITED STATES PATENT AND TRADEMARK OFFICE

UNITED STATES DEPARTMENT OF COMMERCE
United States Patent and Trademark Office
Address: COMMISSIONER FOR PATENTS
P.O. Box 1450
Alexandria, Virginia 22313-1450
www.uspto.gov

APPLICATION NUMBER	FILING OR 371(C) DATE	FIRST NAMED APPLICANT	ATTY.DOCKET NO./TITLE	REQUEST ID
14/487,947	09/16/2014	Robert Voto	7021 145US1 (formerly DP	165990

Acknowledgement of Loss of Entitlement to Entity Status Discount

The entity status change request below filed through Private PAIR on 05/13/2022 has been accepted.

CERTIFICATIONS:

Change of Entity Status:

X Applicant changing to regular undiscounted fee status.
NOTE: Checking this box will be taken to be notification of loss of entitlement to small or micro entity status, as applicable.

This portion must be completed by the signatory or signatories making the entity status change in accordance with 37 CFR 1.4(d)(4).

Signature:	/Robert Myers/
Name:	Robert Myers
Registration Number:	69783

UNITED STATES PATENT AND TRADEMARK OFFICE

UNITED STATES DEPARTMENT OF COMMERCE
United States Patent and Trademark Office
Address: COMMISSIONER FOR PATENTS
P.O. Box 1450
Alexandria, Virginia 22313-1450
www.uspto.gov

APPLICATION NUMBER	FILING OR 371(C) DATE	FIRST NAMED APPLICANT	ATTY. DOCKET NO./TITLE
14/487,947	09/16/2014	Robert Voto	7021 145US1 (formerly DP

CONFIRMATION NO. 2147

171991
Billion & Armitage - Aptiv
7401 Metro Blvd.
Suite 425
Minneapolis, MN 55439

POA ACCEPTANCE LETTER

OC000000133825452

Date Mailed: 05/13/2022

NOTICE OF ACCEPTANCE OF POWER OF ATTORNEY

This is in response to the Power of Attorney filed 05/10/2022.

The Power of Attorney in this application is accepted. Correspondence in this application will be mailed to the above address as provided by 37 CFR 1.33.

Questions about the contents of this notice and the requirements it sets forth should be directed to the Office of Data Management, Application Assistance Unit, at **(571) 272-4000** or **(571) 272-4200** or **1-888-786-0101**.

/tmwilliams/

Microchip Ex. 1002, p. 271
Microchip v. Aptiv
IPR2024-00495

UNITED STATES PATENT AND TRADEMARK OFFICE

UNITED STATES DEPARTMENT OF COMMERCE
United States Patent and Trademark Office
Address: COMMISSIONER FOR PATENTS
P.O. Box 1450
Alexandria, Virginia 22313-1450
www.uspto.gov

APPLICATION NUMBER	FILING OR 371(C) DATE	FIRST NAMED APPLICANT	ATTY. DOCKET NO./TITLE
14/487,947	09/16/2014	Robert Voto	40651-163154

CONFIRMATION NO. 2147

POWER OF ATTORNEY NOTICE

OC000000133825270

279
IP Docket
Clark Hill PLC
130 East Randolph Street
Suite 3900
Chicago, IL 60601

Date Mailed: 05/13/2022

NOTICE REGARDING CHANGE OF POWER OF ATTORNEY

This is in response to the Power of Attorney filed 05/10/2022.

- The Power of Attorney to you in this application has been revoked by the assignee who has intervened as provided by 37 CFR 3.71. Future correspondence will be mailed to the new address of record(37 CFR 1.33).

Questions about the contents of this notice and the requirements it sets forth should be directed to the Office of Data Management, Application Assistance Unit, at **(571) 272-4000** or **(571) 272-4200** or **1-888-786-0101**.

/tmwilliams/

Microchip Ex. 1002, p. 272
Microchip v. Aptiv
IPR2024-00495