PTO/AIA/14 (11-15)
Approved for use through 04/30/2017. OMB 0651-0032
U.S. Patent and Trademark Office; U.S. DEPARTMENT OF COMMERCE
Under the Paperwork Reduction Act of 1995, no persons are required to respond to a collection of information unless it contains a valid OMB control number.

| Application Data Sheet 37 CFR 1.76 | Attorney Docket Number | DP-322037 CIP |
|---|---|---|
| | Application Number | |
| Title of Invention | FLEXIBLE MOBILE DEVICE CONNECTIVITY TO AUTOMOTIVE SYSTEMS WITH USB HUBS | |

The application data sheet is part of the provisional or nonprovisional application for which it is being submitted. The following form contains the bibliographic data arranged in a format specified by the United States Patent and Trademark Office as outlined in 37 CFR 1.76.
This document may be completed electronically and submitted to the Office in electronic format using the Electronic Filing System (EFS) or the document may be printed and included in a paper filed application.

## Secrecy Order 37 CFR 5.2:

☐ Portions or all of the application associated with this Application Data Sheet may fall under a Secrecy Order pursuant to 37 CFR 5.2 (Paper filers only. Applications that fall under Secrecy Order may not be filed electronically.)

## Inventor Information:

**Inventor 1** Remove

**Legal Name**

| Prefix | Given Name | Middle Name | Family Name | Suffix |
|---|---|---|---|---|
| | Robert | M. | Voto | |

**Residence Information (Select One)** ● US Residency Non US Residency Active US Military Service

| City | Clarkston | State/Province | MI | Country of Residence i | US |
|---|---|---|---|---|---|

**Mailing Address of Inventor:**

| | |
|---|---|
| Address 1 | 7054 Oakhurst Ridge |
| Address 2 | |
| City | Clarkston |
| State/Province | MI |
| Postal Code | 48348 |
| Country i | US |

**Inventor 2** Remove

**Legal Name**

| Prefix | Given Name | Middle Name | Family Name | Suffix |
|---|---|---|---|---|
| | Shyambabu | | Yeda | |

**Residence Information (Select One)** ◉ US Residency Non US Residency Active US Military Service

| City | Rochester Hills | State/Province | MI | Country of Residence i | US |
|---|---|---|---|---|---|

**Mailing Address of Inventor:**

| | |
|---|---|
| Address 1 | 2134 Cattail Circle |
| Address 2 | |
| City | Rochester Hills |
| State/Province | MI |
| Postal Code | 46309 |
| Country i | US |

**Inventor 3** Remove

**Legal Name**

| Prefix | Given Name | Middle Name | Family Name | Suffix |
|---|---|---|---|---|
| | Craig | Allan | Petku | |

**Residence Information (Select One)** ◉ US Residency Non US Residency Active US Military Service

Under the Paperwork Reduction Act of 1995, no persons are required to respond to a collection of information unless it contains a valid OMB control number.

| Application Data Sheet 37 CFR 1.76 | Attorney Docket Number | DP-322037 CIP |
|---|---|---|
| | Application Number | |
| Title of Invention | FLEXIBLE MOBILE DEVICE CONNECTIVITY TO AUTOMOTIVE SYSTEMS WITH USB HUBS | |

| City | Clarkston | State/Province | MI | Country of Residence i | US |
|---|---|---|---|---|---|

**Mailing Address of Inventor:**

| | | | |
|---|---|---|---|
| **Address 1** | 5188 Iroquois Court | | |
| **Address 2** | | | |
| **City** | Clarkston | **State/Province** | MI |
| **Postal Code** | 48348 | **Country** i | US |

All Inventors Must Be Listed - Additional Inventor Information blocks may be generated within this form by selecting the **Add** button. Add

## Correspondence Information:

**Enter either Customer Number or complete the Correspondence Information section below. For further information see 37 CFR 1.33(a).**

☐ **An Address is being provided for the correspondence Information of this application.**

| | | | |
|---|---|---|---|
| **Customer Number** | 22851 | | |
| **Email Address** | | Add Email | Remove Email |

## Application Information:

| | | | |
|---|---|---|---|
| **Title of the Invention** | FLEXIBLE MOBILE DEVICE CONNECTIVITY TO AUTOMOTIVE SYSTEMS WITH USB HUBS | | |
| **Attorney Docket Number** | DP-322037 CIP | **Small Entity Status Claimed** | ☐ |
| **Application Type** | Nonprovisional | | |
| **Subject Matter** | Utility | | |
| **Total Number of Drawing Sheets (if any)** | 10 | **Suggested Figure for Publication (if any)** | |

## Filing By Reference:

Only complete this section when filing an application by reference under 35 U.S.C. 111(c) and 37 CFR 1.57(a). Do not complete this section if application papers including a specification and any drawings are being filed. Any domestic benefit or foreign priority information must be provided in the appropriate section(s) below (i.e., "Domestic Benefit/National Stage Information" and "Foreign Priority Information").

For the purposes of a filing date under 37 CFR 1.53(b), the description and any drawings of the present application are replaced by this reference to the previously filed application, subject to conditions and requirements of 37 CFR 1.57(a).

| Application number of the previously filed application | Filing date (YYYY-MM-DD) | Intellectual Property Authority or Country i |
|---|---|---|
| | | |

## Publication Information:

☐ Request Early Publication (Fee required at time of Request 37 CFR 1.219)

☐ **Request Not to Publish.** I hereby request that the attached application not be published under 35 U.S.C. 122(b) and certify that the invention disclosed in the attached application **has not and will not** be the subject of an application filed in another country, or under a multilateral international agreement, that requires publication at eighteen months after filing.

Under the Paperwork Reduction Act of 1995, no persons are required to respond to a collection of information unless it contains a valid OMB control number.

| Application Data Sheet 37 CFR 1.76 | Attorney Docket Number | DP-322037 CIP |
|---|---|---|
| | Application Number | |
| Title of Invention | FLEXIBLE MOBILE DEVICE CONNECTIVITY TO AUTOMOTIVE SYSTEMS WITH USB HUBS | |

## Representative Information:

Representative information should be provided for all practitioners having a power of attorney in the application. Providing this information in the Application Data Sheet does not constitute a power of attorney in the application (see 37 CFR 1.32).
Either enter Customer Number or complete the Representative Name section below. If both sections are completed the customer Number will be used for the Representative Information during processing.

| | | | |
|---|---|---|---|
| Please Select One: | ● Customer Number | US Patent Practitioner | ◯ Limited Recognition (37 CFR 11.9) |
| Customer Number | 22851 | | |

## Domestic Benefit/National Stage Information:

This section allows for the applicant to either claim benefit under 35 U.S.C. 119(e), 120, 121, 365(c), or 386(c) or indicate National Stage entry from a PCT application. Providing benefit claim information in the Application Data Sheet constitutes the specific reference required by 35 U.S.C. 119(e) or 120, and 37 CFR 1.78.
When referring to the current application, please leave the "Application Number" field blank.

| Prior Application Status | Pending | | Remove |
|---|---|---|---|
| Application Number | Continuity Type | Prior Application Number | Filing or 371(c) Date (YYYY-MM-DD) |
| | Continuation in part of | 14487947 | 2014-09-16 |
| Prior Application Status | | | Remove |
| Application Number | Continuity Type | Prior Application Number | Filing or 371(c) Date (YYYY-MM-DD) |
| 14487947 | Claims benefit of provisional | 61882915 | 2013-09-26 |

Additional Domestic Benefit/National Stage Data may be generated within this form by selecting the **Add** button. Add

## Foreign Priority Information:

This section allows for the applicant to claim priority to a foreign application. Providing this information in the application data sheet constitutes the claim for priority as required by 35 U.S.C. 119(b) and 37 CFR 1.55. When priority is claimed to a foreign application that is eligible for retrieval under the priority document exchange program (PDX)[i] the information will be used by the Office to automatically attempt retrieval pursuant to 37 CFR 1.55(i)(1) and (2). Under the PDX program, applicant bears the ultimate responsibility for ensuring that a copy of the foreign application is received by the Office from the participating foreign intellectual property office, or a certified copy of the foreign priority application is filed, within the time period specified in 37 CFR 1.55(g)(1).

Under the Paperwork Reduction Act of 1995, no persons are required to respond to a collection of information unless it contains a valid OMB control number.

| **Application Data Sheet 37 CFR 1.76** | Attorney Docket Number | DP-322037 CIP |
|---|---|---|
| | Application Number | |
| Title of Invention | FLEXIBLE MOBILE DEVICE CONNECTIVITY TO AUTOMOTIVE SYSTEMS WITH USB HUBS | |

Remove

| Application Number | Country[i] | Filing Date (YYYY-MM-DD) | Access Code[i] (if applicable) |
|---|---|---|---|
| | | | |

Additional Foreign Priority Data may be generated within this form by selecting the **Add** button. Add

## Statement under 37 CFR 1.55 or 1.78 for AIA (First Inventor to File) Transition Applications

☐ This application (1) claims priority to or the benefit of an application filed before March 16, 2013 and (2) also contains, or contained at any time, a claim to a claimed invention that has an effective filing date on or after March 16, 2013.
NOTE: By providing this statement under 37 CFR 1.55 or 1.78, this application, with a filing date on or after March 16, 2013, will be examined under the first inventor to file provisions of the AIA.

| Application Data Sheet 37 CFR 1.76 | Attorney Docket Number | DP-322037 CIP |
|---|---|---|
| | Application Number | |
| Title of Invention | FLEXIBLE MOBILE DEVICE CONNECTIVITY TO AUTOMOTIVE SYSTEMS WITH USB HUBS | |

## Authorization or Opt-Out of Authorization to Permit Access:

When this Application Data Sheet is properly signed and filed with the application, applicant has provided written authority to permit a participating foreign intellectual property (IP) office access to the instant application-as-filed (see paragraph A in subsection 1 below) and the European Patent Office (EPO) access to any search results from the instant application (see paragraph B in subsection 1 below).

Should applicant choose not to provide an authorization identified in subsection 1 below, applicant **must opt-out** of the authorization by checking the corresponding box A or B or both in subsection 2 below.

**NOTE**: This section of the Application Data Sheet is **ONLY** reviewed and processed with the **INITIAL** filing of an application. After the initial filing of an application, an Application Data Sheet cannot be used to provide or rescind authorization for access by a foreign IP office(s). Instead, Form PTO/SB/39 or PTO/SB/69 must be used as appropriate.

**1. Authorization to Permit Access by a Foreign Intellectual Property Office(s)**

**A. Priority Document Exchange (PDX)** - Unless box A in subsection 2 (opt-out of authorization) is checked, the undersigned hereby **grants the USPTO authority** to provide the European Patent Office (EPO), the Japan Patent Office (JPO), the Korean Intellectual Property Office (KIPO), the State Intellectual Property Office of the People's Republic of China (SIPO), the World Intellectual Property Organization (WIPO), and any other foreign intellectual property office participating with the USPTO in a bilateral or multilateral priority document exchange agreement in which a foreign application claiming priority to the instant patent application is filed, access to: (1) the instant patent application-as-filed and its related bibliographic data, (2) any foreign or domestic application to which priority or benefit is claimed by the instant application and its related bibliographic data, and (3) the date of filing of this Authorization. See 37 CFR 1.14(h)(1).

**B. Search Results from U.S. Application to EPO** - Unless box B in subsection 2 (opt-out of authorization) is checked, the undersigned hereby **grants the USPTO authority** to provide the EPO access to the bibliographic data and search results from the instant patent application when a European patent application claiming priority to the instant patent application is filed. See 37 CFR 1.14(h)(2).

The applicant is reminded that the EPO's Rule 141(1) EPC (European Patent Convention) requires applicants to submit a copy of search results from the instant application without delay in a European patent application that claims priority to the instant application.

**2. Opt-Out of Authorizations to Permit Access by a Foreign Intellectual Property Office(s)**

☐ A. Applicant **DOES NOT** authorize the USPTO to permit a participating foreign IP office access to the instant application-as-filed. If this box is checked, the USPTO will not be providing a participating foreign IP office with any documents and information identified in subsection 1A above.

☐ B. Applicant **DOES NOT** authorize the USPTO to transmit to the EPO any search results from the instant patent application. If this box is checked, the USPTO will not be providing the EPO with search results from the instant application.

**NOTE:** Once the application has published or is otherwise publicly available, the USPTO may provide access to the application in accordance with 37 CFR 1.14.

Under the Paperwork Reduction Act of 1995, no persons are required to respond to a collection of information unless it contains a valid OMB control number.

| Application Data Sheet 37 CFR 1.76 | Attorney Docket Number | DP-322037 CIP |
|---|---|---|
| | Application Number | |
| Title of Invention | FLEXIBLE MOBILE DEVICE CONNECTIVITY TO AUTOMOTIVE SYSTEMS WITH USB HUBS | |

## Applicant Information:

Providing assignment information in this section does not substitute for compliance with any requirement of part 3 of Title 37 of CFR to have an assignment recorded by the Office.

**Applicant** 1 Remove

If the applicant is the inventor (or the remaining joint inventor or inventors under 37 CFR 1.45), this section should not be completed. The information to be provided in this section is the name and address of the legal representative who is the applicant under 37 CFR 1.43; or the name and address of the assignee, person to whom the inventor is under an obligation to assign the invention, or person who otherwise shows sufficient proprietary interest in the matter who is the applicant under 37 CFR 1.46. If the applicant is an applicant under 37 CFR 1.46 (assignee, person to whom the inventor is obligated to assign, or person who otherwise shows sufficient proprietary interest) together with one or more joint inventors, then the joint inventor or inventors who are also the applicant should be identified in this section.

Clear

| ● Assignee | Legal Representative under 35 U.S.C. 117 | Joint Inventor |
|---|---|---|
| Person to whom the inventor is obligated to assign. | Person who shows sufficient proprietary interest | |

If applicant is the legal representative, indicate the authority to file the patent application, the inventor is:

Name of the Deceased or Legally Incapacitated Inventor:

If the Applicant is an Organization check here. ☒

| Organization Name | DELPHI TECHNOLOGIES, INC. | | |
|---|---|---|---|
| **Mailing Address Information For Applicant:** | | | |
| **Address 1** | P. O. BOX 5052 | | |
| Address 2 | M/C: 483-400-402 | | |
| **City** | TROY | **State/Province** | MI |
| **Country** | US | Postal Code | 48007-5052 |
| Phone Number | | Fax Number | |
| Email Address | | | |

Additional Applicant Data may be generated within this form by selecting the Add button. Add

## Assignee Information including Non-Applicant Assignee Information:

Providing assignment information in this section does not substitute for compliance with any requirement of part 3 of Title 37 of CFR to have an assignment recorded by the Office.

Under the Paperwork Reduction Act of 1995, no persons are required to respond to a collection of information unless it contains a valid OMB control number.

| **Application Data Sheet 37 CFR 1.76** | Attorney Docket Number | DP-322037 CIP |
|---|---|---|
| | Application Number | |
| Title of Invention | FLEXIBLE MOBILE DEVICE CONNECTIVITY TO AUTOMOTIVE SYSTEMS WITH USB HUBS | |

**Assignee 1**

Complete this section if assignee information, including non-applicant assignee information, is desired to be included on the patent application publication. An assignee-applicant identified in the "Applicant Information" section will appear on the patent application publication as an applicant. For an assignee-applicant, complete this section only if identification as an assignee is also desired on the patent application publication.

Remove

If the Assignee or Non-Applicant Assignee is an Organization check here. ☐

| Prefix | **Given Name** | Middle Name | **Family Name** | Suffix |
|---|---|---|---|---|
| | | | | |

**Mailing Address Information For Assignee including Non-Applicant Assignee:**

| | | | |
|---|---|---|---|
| **Address 1** | | | |
| Address 2 | | | |
| **City** | | **State/Province** | |
| **Country** i | | Postal Code | |
| Phone Number | | Fax Number | |
| Email Address | | | |

Additional Assignee or Non-Applicant Assignee Data may be generated within this form by selecting the Add button. Add

## Signature:

Remove

**NOTE:** This Application Data Sheet must be signed in accordance with 37 CFR 1.33(b). **However, if this Application Data Sheet is submitted with the INITIAL filing of the application and either box A or B is not checked in subsection 2 of the "Authorization or Opt-Out of Authorization to Permit Access" section, then this form must also be signed in accordance with 37 CFR 1.14(c).**

This Application Data Sheet **must** be signed by a patent practitioner if one or more of the applicants is a **juristic entity** (e.g., corporation or association). If the applicant is two or more joint inventors, this form must be signed by a patent practitioner, **all** joint inventors who are the applicant, or one or more joint inventor-applicants who have been given power of attorney (e.g., see USPTO Form PTO/AIA/81) on behalf of **all** joint inventor-applicants.

See 37 CFR 1.4(d) for the manner of making signatures and certifications.

| **Signature** | /Robert J. Myers/ | | | Date (YYYY-MM-DD) | 2016-09-06 |
|---|---|---|---|---|---|
| First Name | Robert | Last Name | Myers | Registration Number | 69783 |

Additional Signature may be generated within this form by selecting the Add button. Add

| **Application Data Sheet 37 CFR 1.76** | Attorney Docket Number | DP-322037 CIP |
|---|---|---|
| | Application Number | |
| Title of Invention | FLEXIBLE MOBILE DEVICE CONNECTIVITY TO AUTOMOTIVE SYSTEMS WITH USB HUBS | |

This collection of information is required by 37 CFR 1.76. The information is required to obtain or retain a benefit by the public which is to file (and by the USPTO to process) an application. Confidentiality is governed by 35 U.S.C. 122 and 37 CFR 1.14. This collection is estimated to take 23 minutes to complete, including gathering, preparing, and submitting the completed application data sheet form to the USPTO. Time will vary depending upon the individual case. Any comments on the amount of time you require to complete this form and/or suggestions for reducing this burden, should be sent to the Chief Information Officer, U.S. Patent and Trademark Office, U.S. Department of Commerce, P.O. Box 1450, Alexandria, VA 22313-1450. DO NOT SEND FEES OR COMPLETED FORMS TO THIS ADDRESS. **SEND TO: Commissioner for Patents, P.O. Box 1450, Alexandria, VA 22313-1450.**

# Privacy Act Statement

The Privacy Act of 1974 (P.L. 93-579) requires that you be given certain information in connection with your submission of the attached form related to a patent application or patent. Accordingly, pursuant to the requirements of the Act, please be advised that: (1) the general authority for the collection of this information is 35 U.S.C. 2(b)(2); (2) furnishing of the information solicited is voluntary; and (3) the principal purpose for which the information is used by the U.S. Patent and Trademark Office is to process and/or examine your submission related to a patent application or patent. If you do not furnish the requested information, the U.S. Patent and Trademark Office may not be able to process and/or examine your submission, which may result in termination of proceedings or abandonment of the application or expiration of the patent.

The information provided by you in this form will be subject to the following routine uses:

1 The information on this form will be treated confidentially to the extent allowed under the Freedom of Information Act (5 U.S.C. 552) and the Privacy Act (5 U.S.C. 552a). Records from this system of records may be disclosed to the Department of Justice to determine whether the Freedom of Information Act requires disclosure of these records.

2. A record from this system of records may be disclosed, as a routine use, in the course of presenting evidence to a court, magistrate, or administrative tribunal, including disclosures to opposing counsel in the course of settlement negotiations.

3 A record in this system of records may be disclosed, as a routine use, to a Member of Congress submitting a request involving an individual, to whom the record pertains, when the individual has requested assistance from the Member with respect to the subject matter of the record.

4. A record in this system of records may be disclosed, as a routine use, to a contractor of the Agency having need for the information in order to perform a contract. Recipients of information shall be required to comply with the requirements of the Privacy Act of 1974, as amended, pursuant to 5 U.S.C. 552a(m).

5. A record related to an International Application filed under the Patent Cooperation Treaty in this system of records may be disclosed, as a routine use, to the International Bureau of the World Intellectual Property Organization, pursuant to the Patent CooperationTreaty.

6. A record in this system of records may be disclosed, as a routine use, to another federal agency for purposes of National Security review (35 U.S.C. 181) and for review pursuant to the Atomic Energy Act (42 U.S.C. 218(c)).

7. A record from this system of records may be disclosed, as a routine use, to the Administrator, General Services, or his/her designee, during an inspection of records conducted by GSA as part of that agency's responsibility to recommend improvements in records management practices and programs, under authority of 44 U.S.C. 2904 and 2906. Such disclosure shall be made in accordance with the GSA regulations governing inspection of records for this purpose, and any other relevant (i.e., GSA or Commerce) directive. Such disclosure shall not be used to make determinations about individuals.

8. A record from this system of records may be disclosed, as a routine use, to the public after either publication of the application pursuant to 35 U.S.C. 122(b) or issuance of a patent pursuant to 35 U.S.C. 151. Further, a record may be disclosed, subject to the limitations of 37 CFR 1.14, as a routine use, to the public if the record was filed in an application which became abandoned or in which the proceedings were terminated and which application is referenced by either a published application, an application open to public inspections or an issued patent.

9. A record from this system of records may be disclosed, as a routine use, to a Federal, State, or local law enforcement agency, if the USPTO becomes aware of a violation or potential violation of law or regulation.

# FLEXIBLE MOBILE DEVICE CONNECTIVITY TO AUTOMOTIVE SYSTEMS WITH USB HUBS

## CROSS-REFERENCE TO RELATED APPLICATION

**[0001]** This application is a continuation-in-part application and claims benefit under 35 U.S.C. § 120 of U.S. Patent Application No. 14/487,947, filed September 16, 2014, which claimed priority under 35 U.S.C. § 119(e) of U.S. Provisional Patent Application No. 61/882,915, filed on September 26, 2013, the entire disclosure of each of which are hereby incorporated herein by reference.

## TECHNICAL FIELD OF THE INVENTION

**[0002]** The present invention generally relates to Universal Serial Bus (USB) connectivity between, for example, mobile consumer devices and vehicle electronic systems. More specifically, the present invention relates to a system which is configured to provide that consumer devices that act as either USB host or USB device can connect to a vehicle's embedded USB host that does not have USB On the Go (OTG) capability through an embedded USB hub in the vehicle.

## BACKGROUND OF THE INVENTION

**[0003]** Historically, mobile consumer devices such as media players, smart phones, tablets and the like have relied on connections to other devices, such as laptop or desktop personal computers (PCs) to acquire content, exchange data, and charge the device's internal battery. For many years now, that has been accomplished through USB ports on each device. The use of USB technology is suitable for such needs since it is commonly



Microchip Ex. 1006, p. 10
Microchip v. Aptiv
IPR2024-00495

available, familiar to the end user, cost effective and ubiquitous. USB protocols require a point-to-point connection in which one end is the USB host or master, and the other end is a USB device or slave. In this way, the flow of messages between the two devices is managed and controlled, whereby the USB device responds to messages initiated by the USB host. Historically, PCs have provided USB host ports for connection to simpler USB devices such as printers, memory sticks, mobile phones, etc. The USB host has a greater burden of software and hardware requirements than a USB device, so it has made sense to designate the PC as the USB host in such systems.

**[0004]** In vehicle systems that employ USB connections, the same concepts apply. In such systems, the vehicle is typically the USB host. The USB host function is often embedded into a component of the vehicle infotainment system, such as into the radio or other control module. Typically, multiple USB ports are strategically designed into the vehicle in locations convenient for the driver and passengers to connect their consumer devices. Once a consumer device is connected to one of the ports, the device begins charging and the vehicle infotainment system can access content on the consumer device. This is useful to enable features such as streaming music, video and other services the device may provide.

**[0005]** Such a system requires that each of the USB ports be physically connected to the vehicle's USB host in a manner suitable for USB data flow. This is accomplished through electrical cabling which is embedded in the vehicle, and which connects each of the ports to the USB host. Since there can be many USB ports in a vehicle, and each port requires a cable to connect the port to the USB host, it is desirable to share cabling when possible to minimize cost and mass of the vehicle. This is accomplished through the use



**Microchip Ex. 1006, p. 11**
**Microchip v. Aptiv**
**IPR2024-00495**

of USB hubs. USB hubs allow a single USB host to connect to multiple USB devices over a single cable between the USB host and the USB hub. As shown in Figures 1 and 2, a single USB hub can connect one USB host to several USB devices. Specifically, Figure 1 illustrates a system wherein a self-powered USB hub module 110 having a plurality of USB ports 112 connects to a plurality of USB devices via a plurality of consumer-facing USB ports 114, while Figure 2 illustrates a system wherein a self-powered USB hub module 210 provides not only a plurality of USB ports 212 which are in communication with a plurality of consumer-facing USB ports 214, but also a Secure Digital (SD) card reader 216 which is connected to a consumer-facing SD card connector 218. Other portions of Figures 1 and 2, such as Power Management 116, 220, are standard in the industry and self-explanatory upon viewing Figures 1 and 2.

**[0006]** Furthermore, as shown in Figure 3, multiple USB hubs can be tiered, such that USB hubs connect to other USB hubs. Specifically, Figure 3 illustrates a vehicle system architecture that includes a central vehicle microcontroller 310 (also referred to as the head unit 310). Connected to the head unit 310 are components or systems such as displays 312 , the audio or entertainment system 314, and the driver controls 316. The head unit 310 may be architected as a single module encompassing all functions or distributed such that various functions are managed by individual modules. The head unit 310 includes a Root USB hub 318 which is typically connected to one or more downstream USB hubs 320 A-D distributed throughout the vehicle. Each USB hub 320 has a plurality of downstream ports 322 (at least one of which may be an SD reader 324 or USB audio device-not shown), thereby effectively providing that each USB port 320 A-D in the vehicle has a connection to the USB host 318 or head unit 310. In Figure 3,



Microchip Ex. 1006, p. 12
Microchip v. Aptiv
IPR2024-00495

for example, the Root Hub is embedded in the radio, and is connected to four (4) self-powered USB hubs 320 A-D, wherein one is in the vehicle's center console 320A, one is in the vehicle's center stack 320B, and two are in the vehicle's rear seats 320C, 320D.

**[0007]** Recently, mobile devices such as smart phones have gained in popularity. This is, in part, due to their usefulness as standalone computing devices. With advances in consumer electronic technology and increases in the speed of mobile networks, these devices are no longer reliant on being connected to PCs to access content. These smart mobile devices now have many of the same hardware resources, connectivity and software operating systems that only PCs had in past years. As has been the case with desktop PCs, accessories for these mobile devices have become available to aid in their ease of use. These accessories have included devices such as keyboards, mice, displays, touchscreen, audio systems, and other interface devices. These accessories commonly connect via a USB connection. By way of established convention in the consumer electronics market, these accessories are typically low cost and limited in USB capability to act only as a USB device. To connect them to a smart phone, the smart phone must be the USB host. Therefore, leading mobile device manufacturers and system designers have begun designing their mobile device products (i.e. smart phones, tablets, etc.) to support both USB host and USB device roles. In other words, the phone may configure itself such that it can function as a USB device when it needs to be, or as a USB host when it needs to be. Recently, the system level design thinking has shifted towards viewing smart phones as the USB host, and any device connecting thereto as the USB device. Again, this is not surprising since this is exactly how laptops and PCs work today. Extending this trend into the future, it can be predicted that the smart phone will



**Microchip Ex. 1006, p. 13**
**Microchip v. Aptiv**
**IPR2024-00495**

act primarily as the USB host, and will rarely or never act as a USB device. This presents some problems for automotive systems.

**[0008]** As explained previously, automotive systems have a USB host and require USB devices to connect to it. If a phone acts as a USB host, then the system will not function since by USB convention, two USB hosts cannot directly connect with each other. Automotive manufacturers desire compatibility with smart phones and are therefore motivated to adapt to this changing technology. A redesign of the USB architecture in the vehicle is thus necessary such that the vehicle can act either as the USB host (when necessary to connect to USB devices such as memory sticks, thumb drives, etc.) or USB device (when necessary to connect to USB hosts, such as a smart phone which demands to be USB host rather than USB device.

**[0009]** The USB organization has added a standard that addresses the need for devices to act as either USB host or USB device and as such can be considered a "dual role" USB controller. It is referred to in USB nomenclature as "On The Go" or "OTG" for short. Any device that meets the OTG standard can act as either USB host or USB device and can change roles dynamically. Therefore, one possible approach to modifying the vehicle USB architecture to support all use cases is to upgrade the vehicle's USB host to USB OTG. This solution addresses the issue but has some disadvantages. First, USB hubs do not support OTG and can no longer be used in the system. Each consumer accessible USB port that supports OTG must have a dedicated wire link to a dedicated OTG controller in the head unit thus negating the wiring savings associated with use of USB hubs. As a result several costly cables may need to be added to the vehicle's electrical system. Second, there may not be enough OTG controllers available in the



Microchip Ex. 1006, p. 14
Microchip v. Aptiv
IPR2024-00495

head unit to connect to each of the vehicle's user accessible USB ports. This then forces the vehicle designer to choose a limited number of the many USB ports in the vehicle to support the OTG function and run dedicated USB cables to them. This can lead to user confusion and dissatisfaction since only certain consumer ports support the required functionality. Also, ports that support OTG may be co-located with other physically identical ports that do not. If the user chooses the wrong one, the applications they desire to run from the consumer device that requires USB host mode won't work.

**[0010]** Another possible solution is to implement custom USB hubs wherein the USB hub is able to dynamically swap its upstream port with one it's downstream ports when commanded to do so. System solutions built with this concept still require OTG controllers in the head unit but benefit from the fact that no additional wires need to be installed in the car. The existing USB cable between the USB OTG host and the USB hub can facilitate the necessary USB communications between the USB OTG controller in the head unit and a consumer device in USB host (such as a smart phone). This solution also has some disadvantages however. For example, when the USB hub is commanded to swap it's upstream port with a downstream port, all other downstream ports of the USB hubs lose their data connection with the head unit . While in this mode the head unit access to the other downstream ports of the USB hub cease. This may prevent use of certain vehicle system functions such as navigation or audio playback that may need consistent access to the other downstream ports of the hub to function. Furthermore, it requires the head unit to have an available USB OTG port and a signaling path to control the hub upstream/downstream port configuration.



**Microchip Ex. 1006, p. 15**
**Microchip v. Aptiv**
**IPR2024-00495**

**[0011]** The subject matter discussed in the background section should not be assumed to be prior art merely as a result of its mention in the background section. Similarly, a problem mentioned in the background section or associated with the subject matter of the background section should not be assumed to have been previously recognized in the prior art. The subject matter in the background section merely represents different approaches, which in and of themselves may also be inventions.

## BRIEF SUMMARY OF THE INVENTION

**[0012]** According to an embodiment of this invention, a Universal Serial Bus (USB) hub module is provided. The USB hub module includes an upstream USB port configured to be interconnected to a USB host and a plurality of downstream USB ports configured to be interconnected to a plurality of USB enabled consumer devices. The USB hub module also includes a USB hub that is interconnected to the upstream USB port and the plurality of downstream USB ports. The USB hub is configured to broadcast data from the upstream USB port to each downstream USB port and to transmit data from each downstream USB port to the upstream USB port. The USB hub module further includes a USB bridge interconnected to the USB hub that is configured to connect the upstream USB port to a USB host and a USB routing switch interconnected to the USB bridge, the USB hub, and the plurality of downstream USB ports. The USB routing switch is configured to connect a first downstream USB port of the plurality of downstream USB ports to the upstream USB port through the USB bridge when a consumer device connected to the first downstream USB port is the USB host. The USB routing switch is further configured to initiate bidirectional communication with the upstream USB port. The USB routing switch is configured to connect the first



Microchip Ex. 1006, p. 16
Microchip v. Aptiv
IPR2024-00495

downstream USB port directly to the USB hub when the consumer device connected to the first downstream USB port is configured to only respond to communication from the upstream USB port, thereby rendering the consumer device compatible with a device connected to the upstream USB port.

**[0013]** The USB routing switch may be configured to connect the first downstream USB port to the USB hub through the USB bridge when a first consumer device connected to the first downstream USB port is acting as the USB host. The USB routing switch is configured to simultaneously connect a second downstream USB port of the plurality of downstream USB ports directly to the USB hub when a second consumer device connected to the second downstream USB port is acting as a USB device, thereby rendering the first and second consumer devices compatible to communicate simultaneously with the upstream USB port.

**[0014]** The USB hub module may be configured to recognize whether the consumer device connected to the first downstream USB port is configured to act as the USB host or as a USB device and control the USB routing switch accordingly.

**[0015]** The USB hub module may be configured to dynamically switch operation of the plurality of downstream USB between a USB device mode and a USB host mode.

**[0016]** The USB routing switch may be configured to connect the consumer device to either the USB bridge or the USB hub based on whether the consumer device attached to each downstream USB port in the plurality of downstream USB ports is configured to act as the USB host or a USB device.



**Microchip Ex. 1006, p. 17**
**Microchip v. Aptiv**
**IPR2024-00495**

**[0017]** The USB routing switch may include a plurality of USB analog multiplexing switches. The USB routing switch may include digital routing logic

**[0018]** The USB bridge may be configured to control the USB routing switch and may include a bridge controller as well as endpoint buffers. The endpoint buffers may be configured to support a USB data connection pipe between an infotainment system and the consumer device.

**[0019]** The USB hub module may further include a logic circuit configured to provide data handshaking to negotiate electrical power transfer from the USB hub module to a first consumer device that is connected to the first downstream USB port. The USB hub module may also include a power supply circuit configured to provide electrical power from the USB hub module to the first consumer device. The logic circuit may include a communication control stack. The power supply circuit may include adjustable voltage power supplies.

**[0020]** According to another embodiment of the invention, an integrated circuit (IC) is provided. The integrated circuit includes a USB hub that is configured to be interconnected to an upstream USB port and a plurality of downstream USB ports. The USB hub is configured to broadcast data from the upstream USB port to each downstream USB port and to transmit data from each downstream USB port to the upstream USB port. The IC also includes a USB bridge interconnected to the USB hub and configured to connect the upstream USB port to a USB host and a USB routing switch interconnected to the USB bridge, the USB hub, and the plurality of downstream USB ports. The USB routing switch is configured to connect a first downstream USB



**Microchip Ex. 1006, p. 18**
**Microchip v. Aptiv**
**IPR2024-00495**

port of the plurality of downstream USB ports to the upstream USB port through the USB bridge when a consumer device connected to the first downstream USB port is the USB host. The USB routing switch is further configured to initiate bidirectional communication with the upstream USB port. The USB routing switch is configured to connect the first downstream USB port directly to the USB hub when the consumer device connected to the first downstream USB port is configured to only respond to communication from the upstream USB port, thereby rendering the consumer device compatible with a device connected to the upstream USB port.

**[0021]** The USB routing switch may be configured to connect the first downstream USB port to the USB hub through the USB bridge when a first consumer device connected to the first downstream USB port is acting as the USB host. In this instance, the USB routing switch is configured to simultaneously connect a second downstream USB port of the plurality of downstream USB ports directly to the USB hub when a second consumer device connected to the second downstream USB port is acting as a USB device, thereby rendering the first and second consumer devices compatible to communicate simultaneously with the upstream USB port.

**[0022]** The USB routing switch may be configured to connect the consumer device to either the USB bridge or the USB hub based on whether the consumer device attached to each downstream USB port in the plurality of downstream USB ports is configured to act as the USB host or a USB device. The USB bridge may be configured to control the USB routing switch.



**Microchip Ex. 1006, p. 19**
**Microchip v. Aptiv**
**IPR2024-00495**

**[0023]** The IC may further include a logic circuit that is configured to provide data handshaking to negotiate electrical power transfer from the USB hub module to a first consumer device connected to the first downstream USB port. The logic circuit may include a communication control stack.

**[0024]** Still other embodiments are entirely possible, some of which are described and illustrated herein. For example, the concept can be extended to include additional embedded USB device functions such as USB HID and USB Audio. Further it is also envisioned that all consumer facing USB ports of the USB hub module can emulate or otherwise support dual role USB capability provided that each downstream port has a Bridge to support USB host mode for the connected device and a direct connection to the USB hub to support USB device mode. In all cases, compliance to USB protocols and architectures is preferably maintained.

## BRIEF DESCRIPTION OF THE SEVERAL VIEWS OF THE DRAWING

**[0025]** The organization and manner of the structure and operation of the invention, together with further objects and advantages thereof, may best be understood by reference to the following description taken in connection with the accompanying drawings wherein like reference numerals identify like elements in which:

**[0026]** Figure 1 illustrates a system wherein a multiple port self-powered USB hub functions to connect a single USB host to a plurality of USB ports;

**[0027]** Figure 2 illustrates a system wherein a self-powered USB hub provides not only a plurality of USB ports, but also a Secure Digital (SD) card reader;



**Microchip Ex. 1006, p. 20**
**Microchip v. Aptiv**
**IPR2024-00495**

**[0028]** Figure 3 illustrates a vehicle infotainment system structure wherein multiple USB hubs are connected together or tiered, such that USB hubs feed other USB hubs;

**[0029]** Figure 4 illustrates a system which is in accordance with an embodiment of the present invention, wherein a USB hub, USB bridge and a switching device are provided as discrete components;

**[0030]** Figure 5 illustrates a system which is in accordance with an alternative embodiment of the present invention, wherein USB routing/switching logic and a USB bridge are integrated with a USB hub in a combination USB hub/bridge integrated circuit (IC);

**[0031]** Figure 6 illustrates the different components of the combination USB hub/bridge IC shown in Figure 5;

**[0032]** Figure 7 illustrates one possible endpoint configuration of the USB bridge shown in Figures 5 and 6;

**[0033]** Figure 8 illustrates an example implementation of a head unit software architecture;

**[0034]** Figure 9 illustrates an example of a USB hub power module; and

**[0035]** Figure 10 illustrates another example of a USB hub power module.

## DETAILED DESCRIPTION OF THE INVENTION

**[0036]** While this invention may be susceptible to embodiment in different forms, there are specific embodiments shown in the drawings and will be described herein in



**Microchip Ex. 1006, p. 21**
**Microchip v. Aptiv**
**IPR2024-00495**

detail, with the understanding that the present disclosure is to be considered an exemplification of the principles of the invention, and is not intended to limit the invention to that as illustrated.

**[0037]** Figure 4 illustrates a system which is in accordance with an embodiment of the present invention. The system is configured to effectively render a vehicle's embedded USB host compatible with consumer devices which are configured to also act as USB host or USB device. The system is in the form of a self-powered USB hub module 410 having a USB hub 412, a USB bridge 414, and a switching device 416 implemented as discrete devices. The USB hub 412 is preferably provided in the form of an integrated circuit (IC), and is configured (via an upstream USB port 418) connected to a vehicle's embedded USB host (such as a USB host in a head unit-not shown) via vehicle internal wiring, such as, in one embodiment, via a single USB data cable 420 between the head unit and USB hub 412. The USB hub 412 also includes a plurality of downstream USB ports 422, at least one of which is connected to the USB bridge 414 (which also is preferably provided in the form of an integrated circuit (IC)). At least one downstream USB port 422 of the USB hub 412 is connected to the switching device 416 (such as USB analog multiplexing switches, for example). The switching device 416 is configured to be connected to at least one USB port 422 in the vehicle for connection to a consumer device. The USB bridge 414 is configured to effectively control the switching device 416 although other control mechanisms are envisioned. The USB hub module 410 is configured such that signals received from at least one USB port 422 are received by the switching device 416, and the switching device 416 routes the signals to the USB bridge 414 or the USB hub 412. In the case where the consumer device is acting as USB



**Microchip Ex. 1006, p. 22**
**Microchip v. Aptiv**
**IPR2024-00495**

host, the USB bridge 414 processes the USB packets from the downstream USB port 422 and provides them to the USB hub 412, thereby rendering the consumer device compatible with the vehicle's embedded USB host. In the case where the consumer device is acting as USB device, the USB bridge 414 controls the switching device 416 such that the switching device 416 provides the USB signaling directly to the USB hub 412, bypassing the USB bridge 414.

**[0038]** As shown in Figure 4, the system also includes Power Management structure 424, as well as some other conventional structure not specifically shown in Figure 4, but which would be readily assumed to be present by one having ordinary skill in the art.

**[0039]** In use, the head unit controls the switching device 416 via the USB bridge hardware or any other convenient means of control. The head unit software application may choose to enable, for example, a phone on any one of the consumer USB ports, by requesting, commanding or otherwise knowing the phone is required to be in USB host mode and commanding the routing of the specific USB port the phone is attached to the USB bridge 414. Once routed to the USB bridge 414, the phone will detect a USB device is connected and the phone will begin the standard USB enumeration sequence. The detection and enumeration processes are defined by USB standards and not explained here in detail. However, for purposes of describing the operation of the invention, a general understanding is provided herein. The enumeration process follows a strict sequence of USB descriptor requests from the USB host and USB descriptor responses from the USB device that allow the Host to determine the capabilities and functions of the USB device and configure the USB device for operation. Once the complete set of device descriptors are known the USB host will then load the appropriate



**Microchip Ex. 1006, p. 23**
**Microchip v. Aptiv**
**IPR2024-00495**

USB driver(s) and applications to support in the functionality that the USB device provides. In the scope of this invention it is envisioned that the responses to the descriptor requests made by the phone (USB host) are either answered locally by the Bridge or preferably, the requests are forwarded through the USB bridge 414 to the head unit where its device drivers process the request and return the response. The descriptor responses from the device driver are conveyed to the USB bridge 414, which then, in turn, passes them to the phone. By passing descriptor request to the head unit drivers and returning the responses from the head unit drivers back to the consumer device, the USB bridge 414 appears as a transparent component in the USB system architecture. The system capabilities are controlled by the head unit and the system remains flexible without need for changes to the USB bridge firmware or hardware when the system designer requires changes to the descriptor responses. Once the consumer device completes the enumeration process, the head unit's USB functional capabilities are known to the consumer device and the consumer device may enable use of those functions over USB communication. At this point, the consumer device or the head unit may begin activating any number of supported services such as data connections, streaming audio and streaming video to and from the vehicle via the USB bridge 414.

**[0040]** Another embodiment of the present invention can be provided, wherein the bridge is configured to act as an OTG port thus negating the need for switches and/or routing logic. In this case there would exist one Bridge functional block for each downstream port. This embodiment would effectively be a more generalized case of the example illustrated in Figure 4. Figure 4 shows just one USB bridge 414 that any one of the downstream USB ports 422 can be routed to. With just one USB bridge 414, only



**Microchip Ex. 1006, p. 24**
**Microchip v. Aptiv**
**IPR2024-00495**

one downstream USB port 422 can be connected to a USB host at a time. However, if each downstream port of the USB hub has a dedicated USB bridge, then multiple downstream ports can support connection to USB host devices at the same time. Thus, any consumer port can be in either USB host or USB device mode at any time independently of the others.

**[0041]** Figure 5 illustrates an alternative embodiment of a USB hub module 510 wherein the switching device 516 comprises USB routing logic, and both the switching device 516 and the USB bridge 514 are integrated with the USB hub 512 in a combination USB hub/bridge integrated circuit (IC) 526. This configuration has cost and size advantages over building it with discrete components connected together on a printed circuit board.

**[0042]** Figure 6 illustrates the internal components of the USB hub/bridge IC 526 shown in Figure 5. As shown, preferably the components of the USB bridge 614 include a bridge controller 628 as well as endpoint buffers 630. While the exact configuration of endpoints is effectively up to the system designer to choose for a particular need, a specific example of one possible endpoint configuration is shown in Figure 7; however, many others are possible.

**[0043]** As shown in Figure 7, the endpoints of the USB bridge 614 may be designed to support multiple pipes of Bulk USB data connections between the host A (head unit) and host B (consumer device). In the USB bridge 614, the IN endpoints of device A are connected to the OUT endpoints of device B and the OUT endpoints of device A 732 are connected to the IN endpoints of device B 734. The design of the USB bridge 614 may



**Microchip Ex. 1006, p. 25**
**Microchip v. Aptiv**
**IPR2024-00495**

be such that the data flow between the endpoints may be direct or buffered. For example, in the case of direct connection, once a USB packet is received from host A on a device A OUT endpoint, the internal logic of the USB bridge 614 moves to packet to the device B IN endpoint if it is available. If device B IN endpoint is full or otherwise not available then subsequent attempts of Host A to send more packets to device A in the USB bridge 614 will be rejected until such time that the device B IN endpoint is clear and the contents of the device A OUT buffer is moved to it. Alternatively, there may exist a local buffer in the USB bridge 614 between the endpoints of device A and B. For example, packets received on an OUT endpoint of device A are placed in a local memory device for temporary storage until device B IN endpoint is ready for them. The OUT endpoints are thus capable of receiving multiple packets from the Host until the buffer is full. Likewise the IN endpoints may, at times, transmit multiple packets until the buffer is empty. Such buffers are not required, but are envisioned, to improve system throughput performance in certain circumstances where one of the USB hosts is occasionally busy and not keeping up with USB transactions at the same rate as the other USB host. Regardless of the buffer configuration, the USB bridge hardware has IN and OUT endpoints on device A mapped to OUT and IN endpoints respectively on device B, thus forming a bidirectional bridge that passes USB traffic between two USB hosts with bandwidth sufficient to support the application requirements of the system.

**[0044]** Also shown in Figure 7, device A 732 and device B 734 provide a bidirectional control endpoint connected to their respective USB hosts. Control endpoints are required per the USB standard to support USB defined control messages between the host and device both during and after the enumeration sequence. Optionally,



**Microchip Ex. 1006, p. 26**
**Microchip v. Aptiv**
**IPR2024-00495**

USB endpoints may also be utilized per USB standard to employ messages intended to control user defined custom device specific behavior, referred to as vendor specific messages. As can be seen in Figure 7, the control endpoints are mapped to the bridge controller 628. The BC logic may be implemented in hardware or preferably software. The bridge controller 628 provides the capability to send, receive and process USB standard control endpoint messages as well as vendor specific messages essential to the control and operation of the USB bridge 614. At system startup, host A requests and receives descriptors from the bridge controller 628 via the control endpoint. Once complete, host A then loads the bridge driver in its software stack and configures the custom Bridge hardware for operation. Host A can then control the functions of the USB bridge 614, such as USB switch routing control. The system is now ready to accept connection with USB host mode consumer devices on device B 734 of the USB bridge 614. When such a connection is made, the bridge controller 628 will notify the bridge driver in host A by sending a message on the control endpoint to host A. Further, host B will begin sending descriptor requests on the control endpoint to device B 734 in the USB bridge 614. The bridge controller 628 receives theses requests, encapsulates them with information that identifies them as descriptor requests from host B and passes them to the bridge driver on host A using the control endpoint. The host A bridge driver receives these requests, identifies them as descriptor requests and passes the requests on to other software components in host A system and waits for the descriptor responses. The descriptor responses are encapsulated by the bridge driver to indicate they are descriptor responses that are to be forwarded to host B. The response is then sent to the bridge controller 628 via the control endpoint. The bridge controller 628 receives them,



**Microchip Ex. 1006, p. 27**
**Microchip v. Aptiv**
**IPR2024-00495**

identifies them as descriptor responses that should be forwarded to device B and places them on the control endpoint for device B 734. This process of receiving and forwarding messages back and forth between the two hosts continues until the enumeration process is complete with host B. From that point on the two hosts may begin to use the IN and OUT endpoints to transfer application data and services over the bulk endpoints.

**[0045]** Figure 8 illustrates one possible configuration of the system architecture including software components in the head unit 310 interfacing with the USB hub module 410. There are multiple ways that the operating system and software architecture can be constructed to support the functions of the USB hub module 410. In Figure 8, a typical Linux implementation is shown including the USB hub module 410 and the head unit 310. The system design utilizes standard Linux kernel components and configurations and should be familiar to those skilled in the art. The head unit's USB host controller hardware is driven by the host controller driver. the host controller driver is connected to the USB core. The USB core connects the host controller driver with the standard USB Linux device drivers and the custom bridge driver. The bridge driver is configured to optionally connect directly to the user space application software or to the USB gadget driver depending on system architecture. The custom bridge driver plays a dual role of both controlling the functions of the bridge hardware as well as providing a data path between the gadget device drivers and applications running on the head unit 310. The architecture illustrated is capable of handling both the operation and data paths associated with the USB bridge 414 and the USB hub 412 at the same time, thus allowing concurrent operation of consumer devices operating in USB device mode with consumer devices operating in USB host mode. In one embodiment, the USB hub module 410



**Microchip Ex. 1006, p. 28**
**Microchip v. Aptiv**
**IPR2024-00495**

supports simultaneous active USB data connections between the head unit 310 and multiple consumer devices, at least one of which being in host mode while the others are in device mode. In another embodiment, the USB hub module 410 supports simultaneous active USB data connections between the head unit 310 and some combination of embedded and consumer USB devices along with at least one device being in host mode. While it is understood that the software functions of the head unit 310 are essential to building a complete system, the designs of which can vary significantly and this example is provided only as a means of demonstrating one way to utilize the functionality of the present invention.

**[0046]** Figures 9 illustrates a USB hub power module 910 that includes USB power delivery capability as described USB Power Delivery Specification Rev. 3.0 v1.0 published March 25, 2106 by the USB Implementer's Forum, Inc. This technology provides the means for the USB hub power module 910 to provide greater charging capabilities to the consumer devices connected to the downstream ports. The USB hub power module 910 has at least one downstream port connector 936 that conforms to the USB Type C standard as described in the USB Type-C Cable and Connector Specification, Revision 1.2 published March 25, 2106 by the USB Implementer's Forum, Inc. In addition to the functions of the USB hub module 410, 510, or 610 discussed above, this USB hub power module 910 further includes adjustable voltage power supplies 938, power control logic circuits 940 to facilitate handshaking over the CC1 and CC2 pins, and a communication control stack that is integral to the logic circuits. The USB Type-C connector requirements include data transmissions between the electrical power provider (source) and the electrical power consumer (sink) on CC1 and CC2 pins



**Microchip Ex. 1006, p. 29**
**Microchip v. Aptiv**
**IPR2024-00495**

defined in the USB Type C standard as a handshaking function. The source in this case is the USB hub power module 910 and the sink is the consumer device (not shown) connected to the downstream port connector 936. To facilitate the handshake function on the CC1 and CC2 pins, additional logic circuits in the form of separate discrete IC's and passive components may be added to the USB hub power module 910 as shown in Figure 9. To facilitate the handshake function on the CC1 and CC2 pins and control the adjustable power supplies 938, additional logic circuits may be added to the USB hub power module 910 in the form of separate discrete IC's and passive components. Preferably, the logic circuits, communication stack, and physical layer interface functions would be integrated in the USB hub/bridge IC 926, thereby reducing bill of material costs and manufacturing costs.

**[0047]** As alternate embodiment of the USB hub power module 1010 is shown in Figure 10. The power control logic circuits are further integrated in a USB hub/bridge IC 1026, thereby further reducing bill of material costs and manufacturing costs.

**[0048]** While this invention has been described in terms of the preferred embodiments thereof, it is not intended to be so limited, but rather only to the extent set forth in the claims that follow. Moreover, the use of the terms first, second, etc. does not denote any order of importance, but rather the terms first, second, etc. are used to distinguish one element from another. Furthermore, the use of the terms a, an, etc. do not denote a limitation of quantity, but rather denote the presence of at least one of the referenced items.



**Microchip Ex. 1006, p. 30**
**Microchip v. Aptiv**
**IPR2024-00495**

**WE CLAIM:**

1. A Universal Serial Bus (USB) hub module, comprising:

an upstream USB port;

a plurality of downstream USB ports;

a USB hub interconnected to the upstream USB port and the plurality of downstream USB ports, said USB hub configured to broadcast data from the upstream USB port to each downstream USB port and to transmit data from each downstream USB port to the upstream USB port;

a USB bridge interconnected to the USB hub and configured to connect the upstream USB port to a USB host; and

a USB routing switch interconnected to the USB bridge, the USB hub, and the plurality of downstream USB ports, wherein the USB routing switch is configured to connect a first downstream USB port of the plurality of downstream USB ports to the upstream USB port through the USB bridge when a consumer device connected to the first downstream USB port is the USB host and is configured to initiate bidirectional communication with the upstream USB port, and wherein the USB routing switch is configured to connect the first downstream USB port directly to the USB hub when the consumer device connected to the first downstream USB port is configured to only respond to communication from the upstream USB port, thereby rendering the consumer device compatible with a device connected to the upstream USB port.

2. The USB hub module according to claim 1, wherein the USB routing switch is configured to connect the first downstream USB port to the USB hub through the USB bridge when a first consumer device connected to the first downstream USB port is acting



Microchip Ex. 1006, p. 31
Microchip v. Aptiv
IPR2024-00495

as the USB host, and wherein the USB routing switch is configured to simultaneously connect a second downstream USB port of the plurality of downstream USB ports directly to the USB hub when a second consumer device connected to the second downstream USB port is acting as a USB device, thereby rendering the first and second consumer devices compatible to communicate simultaneously with the upstream USB port.

3. The USB hub module according to claim 1, wherein the USB hub module is configured to recognize whether the consumer device connected to the first downstream USB port is configured to act as the USB host or as a USB device and control the USB routing switch accordingly.

4. The USB hub module according to claim 1, wherein the USB hub module is configured to dynamically switch operation of the plurality of downstream USB between a USB device mode and a USB host mode.

5. The USB hub module according to claim 1, wherein the USB routing switch is configured to connect the consumer device to either the USB bridge or the USB hub based on whether the consumer device attached to each downstream USB port in the plurality of downstream USB ports is configured to act as the USB host or a USB device.

6. The USB hub module according to claim 1, wherein the USB routing switch comprises a plurality of USB analog multiplexing switches.

7. The USB hub module according to claim 1, wherein the USB bridge is configured to control the USB routing switch.



**Microchip Ex. 1006, p. 32**
**Microchip v. Aptiv**
**IPR2024-00495**

8. The USB hub module according to claim 1, wherein the USB bridge comprises a bridge controller as well as endpoint buffers.

9. The USB hub module according to claim 8, wherein the endpoint buffers are configured to support a USB data connection pipe between an infotainment system and the consumer device.

10. The USB hub module according to claim 1, wherein the USB routing switch comprises digital routing logic.

11. The USB hub module according to claim 1, wherein the USB hub module further comprises a logic circuit configured to provide data handshaking to negotiate electrical power transfer from the USB hub module to a first consumer device connected to the first downstream USB port, and wherein the USB hub module further comprises a power supply circuit configured to provide electrical power from the USB hub module to the first consumer device.

12. The USB hub module according to claim 11, wherein the logic circuit includes a communication control stack.

13. The USB hub module according to claim 11, wherein the power supply circuit includes adjustable voltage power supplies.

14. An integrated circuit, comprising:

a USB hub configured to be interconnected to an upstream USB port and a plurality of downstream USB ports, said USB hub configured to broadcast data from the



Microchip Ex. 1006, p. 33
Microchip v. Aptiv
IPR2024-00495

upstream USB port to each downstream USB port and to transmit data from each downstream USB port to the upstream USB port;

a USB bridge interconnected to the USB hub and configured to connect the upstream USB port to a USB host; and

a USB routing switch interconnected to the USB bridge, the USB hub, and the plurality of downstream USB ports, wherein the USB routing switch is configured to connect a first downstream USB port of the plurality of downstream USB ports to the upstream USB port through the USB bridge when a consumer device connected to the first downstream USB port is the USB host and is configured to initiate bidirectional communication with the upstream USB port, and wherein the USB routing switch is configured to connect the first downstream USB port directly to the USB hub when the consumer device connected to the first downstream USB port is configured to only respond to communication from the upstream USB port, thereby rendering the consumer device compatible with a device connected to the upstream USB port.

15. The integrated circuit according to claim 14, wherein the USB routing switch is configured to connect the first downstream USB port to the USB hub through the USB bridge when a first consumer device connected to the first downstream USB port is acting as the USB host, and wherein the USB routing switch is configured to simultaneously connect a second downstream USB port of the plurality of downstream USB ports directly to the USB hub when a second consumer device connected to the second downstream USB port is acting as a USB device, thereby rendering the first and second consumer devices compatible to communicate simultaneously with the upstream USB port.



**Microchip Ex. 1006, p. 34**
**Microchip v. Aptiv**
**IPR2024-00495**

16. The integrated circuit according to claim 14, wherein the USB routing switch is configured to connect the consumer device to either the USB bridge or the USB hub based on whether the consumer device attached to each downstream USB port in the plurality of downstream USB ports is configured to act as the USB host or a USB device.

17. The integrated circuit according to claim 14, wherein the USB bridge is configured to control the USB routing switch.

18. The integrated circuit according to claim 14, wherein the integrated circuit further comprises a logic circuit configured to provide data handshaking to negotiate electrical power transfer from the USB hub module to a first consumer device connected to the first downstream USB port.

19. The integrated circuit according to claim 18, wherein the logic circuit includes a communication control stack.



**Microchip Ex. 1006, p. 35**
**Microchip v. Aptiv**
**IPR2024-00495**

## ABSTRACT OF THE DISCLOSURE

A USB hub module which is configured to enable a vehicle's embedded USB host to connect to multiple mobile devices through a USB hub, regardless of whether the mobile devices are configured to act as USB hosts or USB devices, without providing USB OTG controllers or additional vehicle wiring or inhibiting functionality of consumer devices connected the module while one consumer device connected to the module operates in USB host mode. Preferably, the module is configured so that no additional cabling or hardware changes are required to the head unit. The module can be employed between the embedded USB host, USB hub and at least one consumer accessible USB port. When the consumer device is acting as a USB host, signals between the consumer device and the vehicle's embedded USB host are processed through a bridge, thereby rendering the consumer device compatible with the embedded USB host.



**Microchip Ex. 1006, p. 36**
**Microchip v. Aptiv**
**IPR2024-00495**

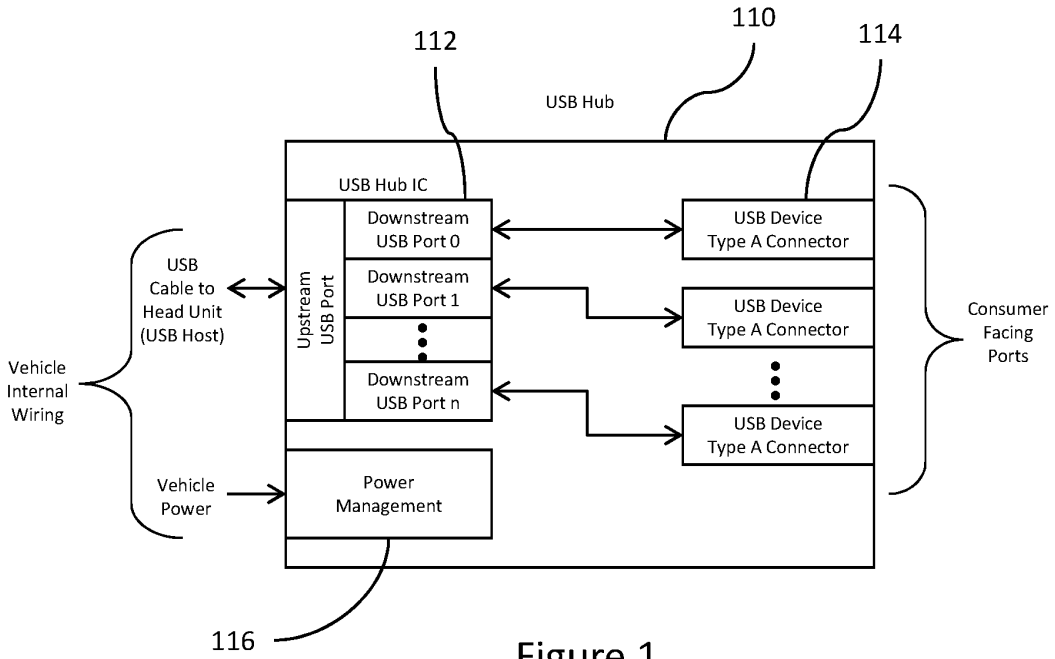


Figure 1

PRIOR ART

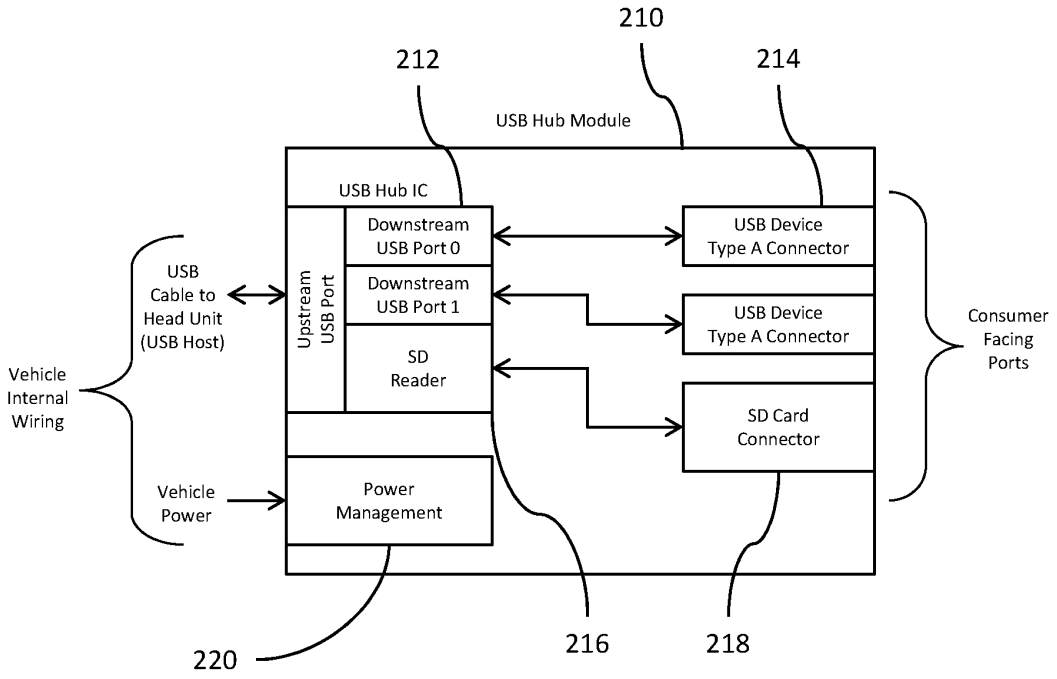


Figure 2

PRIOR ART

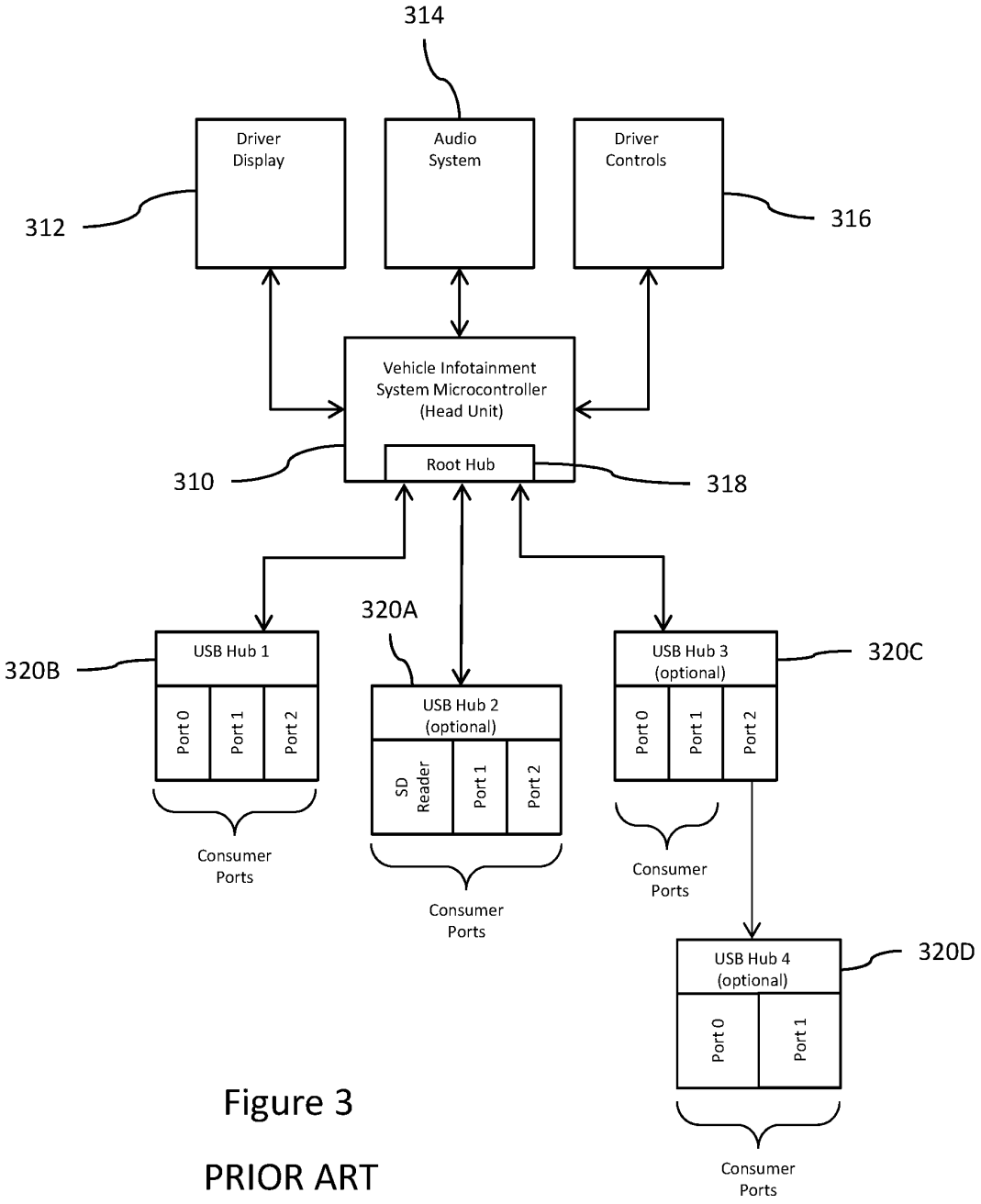


Figure 3

PRIOR ART

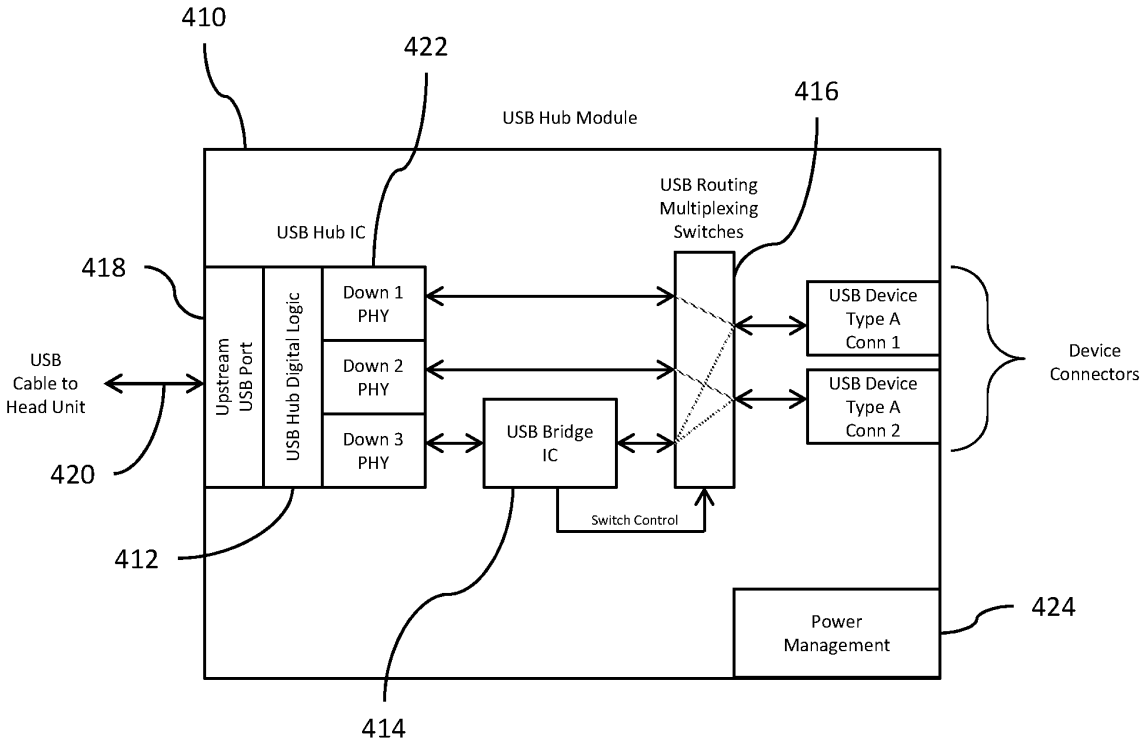
410
422
416
USB Hub Module
USB Routing
Multiplexing
Switches
USB Hub IC
418
Upstream
USB Port
USB Hub Digital Logic
Down 1
PHY
Down 2
PHY
Down 3
PHY
USB
Cable to
Head Unit
420
USB Bridge
IC
USB Device
Type A
Conn 1
USB Device
Type A
Conn 2
Device
Connectors
Switch Control
412
Power
Management
424
414

Figure 4

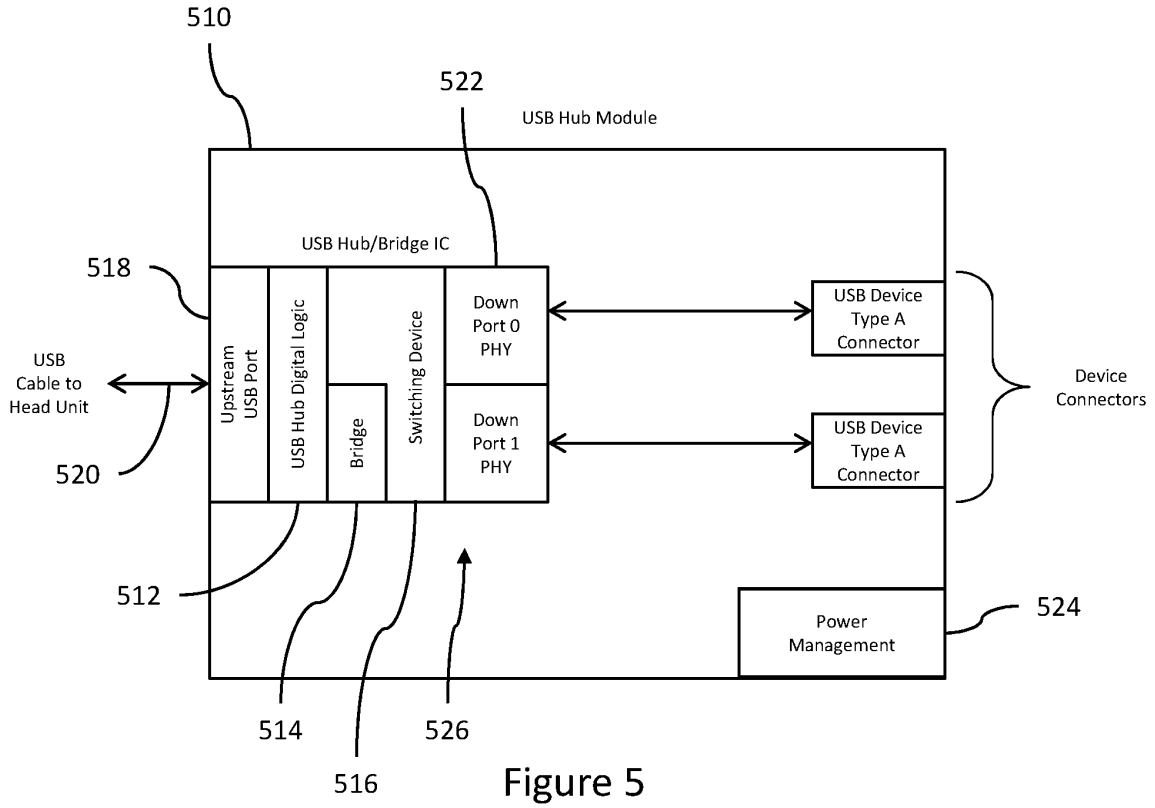
510
522
USB Hub Module
USB Hub/Bridge IC
518
USB Cable to Head Unit
520
Upstream USB Port
USB Hub Digital Logic
Bridge
Switching Device
Down Port 0 PHY
Down Port 1 PHY
USB Device Type A Connector
USB Device Type A Connector
Device Connectors
512
514
516
526
Power Management
524

Figure 5

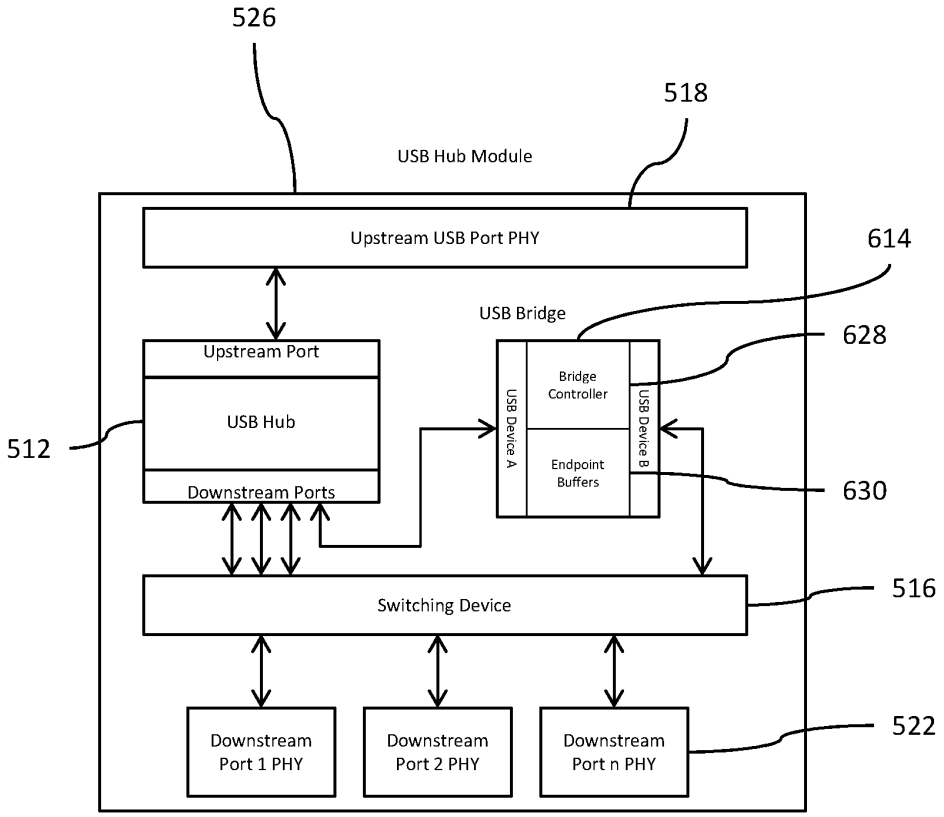
526
518
USB Hub Module
Upstream USB Port PHY
614
USB Bridge
628
Upstream Port
USB Hub
512
Downstream Ports
USB Device A
Bridge Controller
Endpoint Buffers
USB Device B
630
Switching Device
516
Downstream Port 1 PHY
Downstream Port 2 PHY
Downstream Port n PHY
522

Figure 6

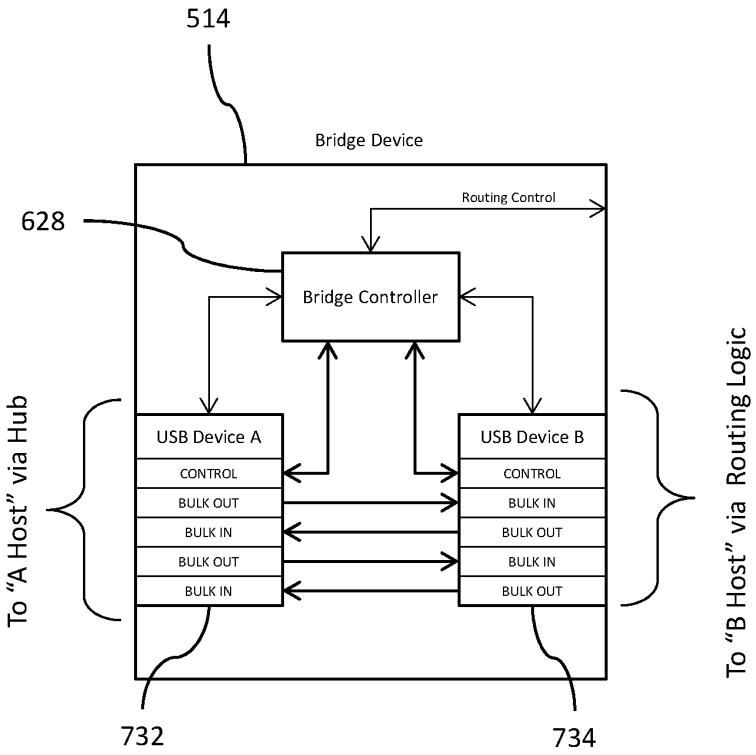
514
Bridge Device
628
Routing Control
Bridge Controller
USB Device A
CONTROL
BULK OUT
BULK IN
BULK OUT
BULK IN
USB Device B
CONTROL
BULK IN
BULK OUT
BULK IN
BULK OUT
To "A Host" via Hub
To "B Host" via Routing Logic
732
734

Figure 7

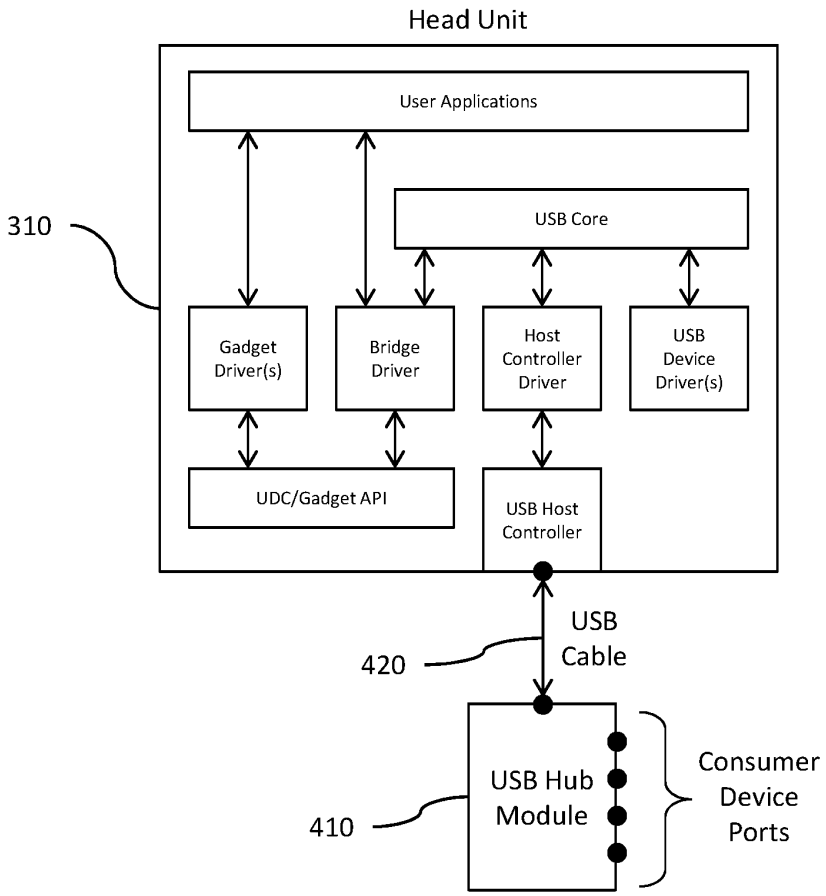
Head Unit
User Applications
USB Core
310
Gadget Driver(s)
Bridge Driver
Host Controller Driver
USB Device Driver(s)
UDC/Gadget API
USB Host Controller
USB Cable
420
USB Hub Module
410
Consumer Device Ports

Figure 8

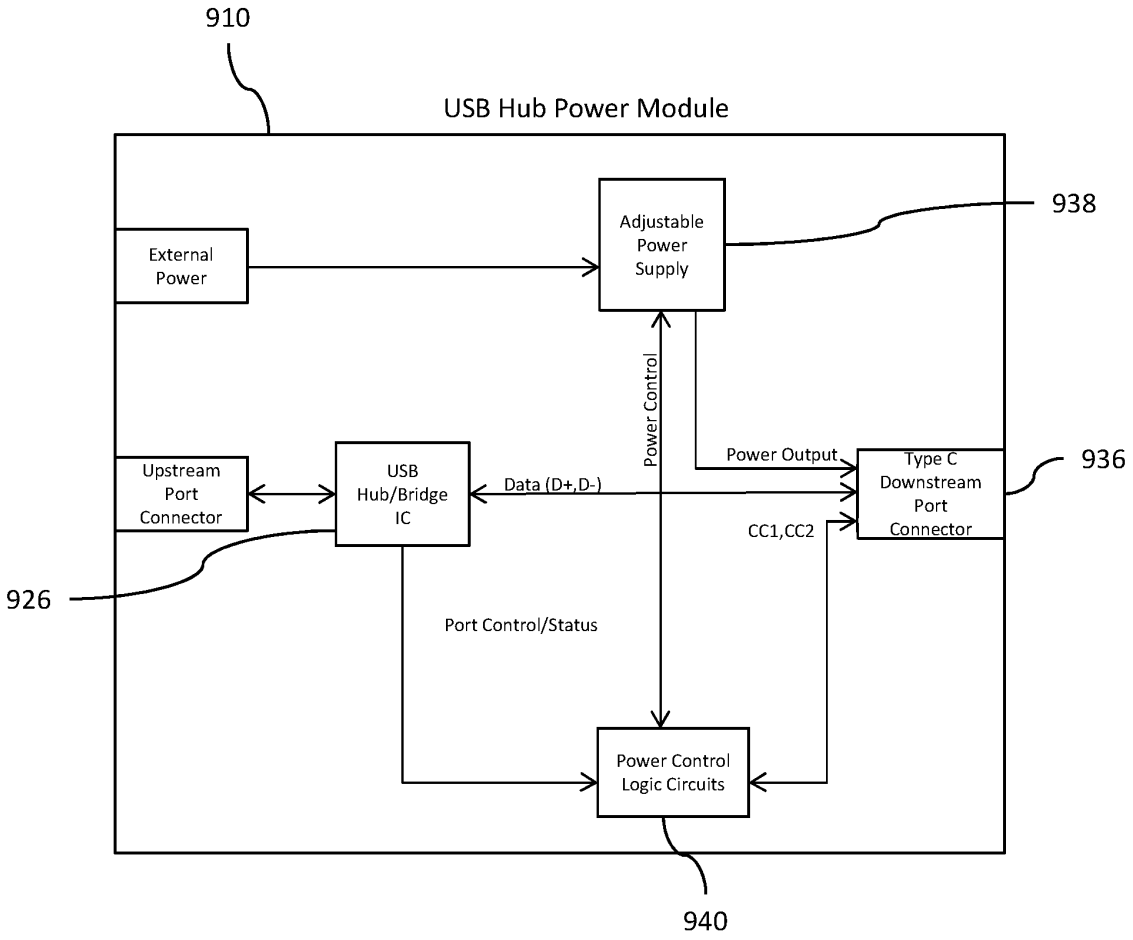
910
USB Hub Power Module
938
External Power
Adjustable Power Supply
Power Control
Power Output
Type C Downstream Port Connector
936
Upstream Port Connector
USB Hub/Bridge IC
Data (D+,D-)
CC1,CC2
926
Port Control/Status
Power Control Logic Circuits
940

Figure 9

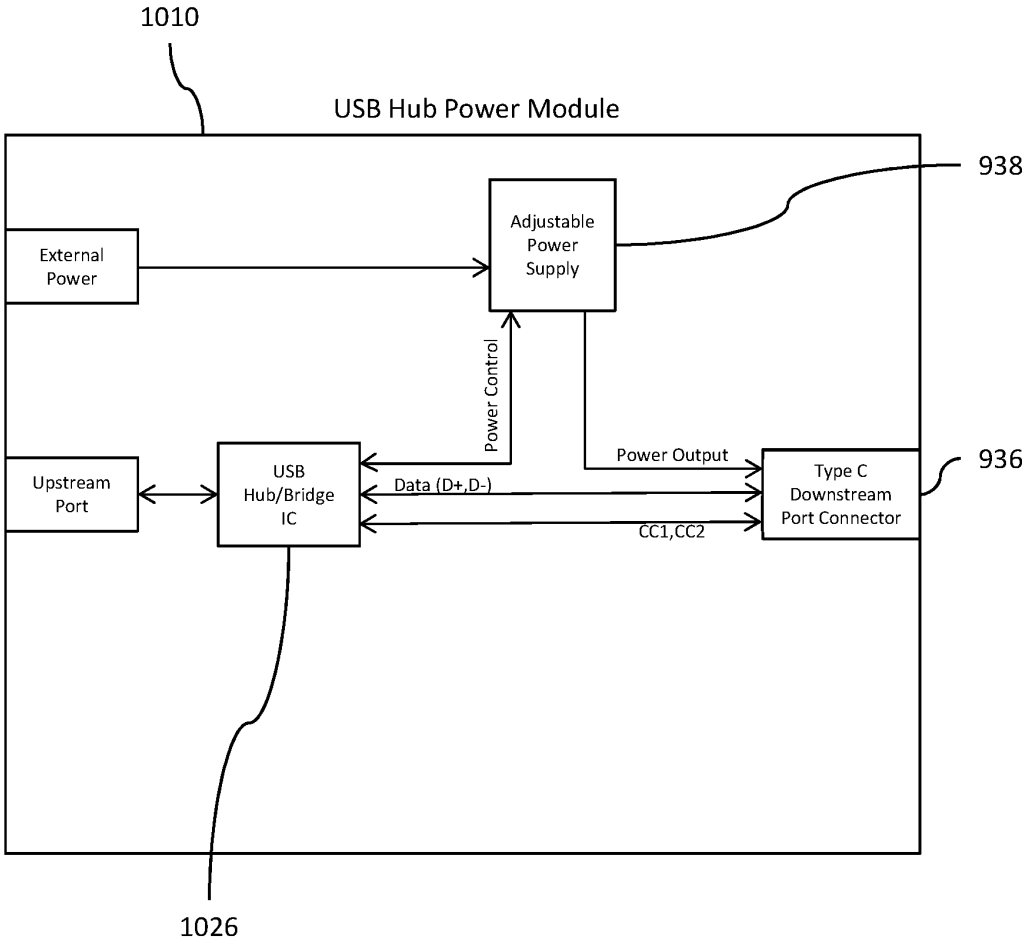
1010
USB Hub Power Module
938
External Power
Adjustable Power Supply
Power Control
Power Output
Upstream Port
USB Hub/Bridge IC
Data (D+,D-)
Type C Downstream Port Connector
936
CC1,CC2
1026

Figure 10

# Electronic Patent Application Fee Transmittal

| | |
|---|---|
| **Application Number:** | |
| **Filing Date:** | |
| **Title of Invention:** | FLEXIBLE MOBILE DEVICE CONNECTIVITY TO AUTOMOTIVE SYSTEMS WITH USB HUBS |
| **First Named Inventor/Applicant Name:** | ROBERT M. VOTO |
| **Filer:** | Lawrence Dean Hazelton/Kandace Powell |
| **Attorney Docket Number:** | DP-322037 CIP |

Filed as Large Entity

**Filing Fees for Utility under 35 USC 111(a)**

| Description | Fee Code | Quantity | Amount | Sub-Total in USD($) |
|---|---|---|---|---|
| **Basic Filing:** | | | | |
| Utility application filing | 1011 | 1 | 280 | 280 |
| Utility Search Fee | 1111 | 1 | 600 | 600 |
| Utility Examination Fee | 1311 | 1 | 720 | 720 |
| **Pages:** | | | | |
| **Claims:** | | | | |
| **Miscellaneous-Filing:** | | | | |
| Late Filing Fee for Oath or Declaration | 1051 | 1 | 140 | 140 |
| **Petition:** | | | | |

| Description | Fee Code | Quantity | Amount | Sub-Total in USD($) |
|---|---|---|---|---|
| **Patent-Appeals-and-Interference:** | | | | |
| **Post-Allowance-and-Post-Issuance:** | | | | |
| **Extension-of-Time:** | | | | |
| **Miscellaneous:** | | | | |
| | | | **Total in USD ($)** | **1740** |

# Electronic Acknowledgement Receipt

| | |
|---|---|
| **EFS ID:** | 26840492 |
| **Application Number:** | 15257096 |
| **International Application Number:** | |
| **Confirmation Number:** | 3519 |
| **Title of Invention:** | FLEXIBLE MOBILE DEVICE CONNECTIVITY TO AUTOMOTIVE SYSTEMS WITH USB HUBS |
| **First Named Inventor/Applicant Name:** | ROBERT M. VOTO |
| **Customer Number:** | 22851 |
| **Filer:** | Lawrence Dean Hazelton/Kandace Powell |
| **Filer Authorized By:** | Lawrence Dean Hazelton |
| **Attorney Docket Number:** | DP-322037 CIP |
| **Receipt Date:** | 06-SEP-2016 |
| **Filing Date:** | |
| **Time Stamp:** | 14:43:39 |
| **Application Type:** | Utility under 35 USC 111(a) |

## Payment information:

| | |
|---|---|
| Submitted with Payment | yes |
| Payment Type | DA |
| Payment was successfully received in RAM | $1740 |
| RAM confirmation Number | 090716INTEFSW00000992500831 |
| Deposit Account | 500831 |
| Authorized User | Kandace Powell |

The Director of the USPTO is hereby authorized to charge indicated fees and credit any overpayment as follows:

37 CFR 1.16 (National application filing, search, and examination fees)

37 CFR 1.17 (Patent application and reexamination processing fees)

37 CFR 1.19 (Document supply fees)

37 CFR 1.21 (Miscellaneous fees and charges)

## File Listing:

| Document Number | Document Description | File Name | File Size(Bytes)/ Message Digest | Multi Part /.zip | Pages (if appl.) |
|---|---|---|---|---|---|
| 1 | Application Data Sheet | DP322037CIP_ADS_aia0014.pdf | 1823168<br>259e53c5172a366434a4e2d147af1cd2d964f603 | no | 9 |
| **Warnings:** | | | | | |
| **Information:** | | | | | |
| 2 | | DP322037_CIP_appl_final.pdf | 118294<br>2e9406674ee090ccd17af70ee5f351f2a90e9289 | yes | 27 |
| | **Multipart Description/PDF files in .zip description** | | | | |
| | **Document Description** | | **Start** | **End** | |
| | Specification | | 1 | 21 | |
| | Claims | | 22 | 26 | |
| | Abstract | | 27 | 27 | |
| **Warnings:** | | | | | |
| **Information:** | | | | | |
| 3 | Drawings-only black and white line drawings | DP322037CIP_prelim_drawings.pdf | 92889<br>c0c18b3bf3e95fd38a5e6b3056010358add632d2 | no | 10 |
| **Warnings:** | | | | | |
| **Information:** | | | | | |
| 4 | Fee Worksheet (SB06) | fee-info.pdf | 37136<br>29c5e5bdd009526f5a66a118802301ba97a761ec | no | 2 |
| **Warnings:** | | | | | |
| **Information:** | | | | | |
| | | **Total Files Size (in bytes):** | 2071487 | | |

**This Acknowledgement Receipt evidences receipt on the noted date by the USPTO of the indicated documents, characterized by the applicant, and including page counts, where applicable. It serves as evidence of receipt similar to a Post Card, as described in MPEP 503.**

**New Applications Under 35 U.S.C. 111**
**If a new application is being filed and the application includes the necessary components for a filing date (see 37 CFR 1.53(b)-(d) and MPEP 506), a Filing Receipt (37 CFR 1.54) will be issued in due course and the date shown on this Acknowledgement Receipt will establish the filing date of the application.**

**National Stage of an International Application under 35 U.S.C. 371**
**If a timely submission to enter the national stage of an international application is compliant with the conditions of 35 U.S.C. 371 and other applicable requirements a Form PCT/DO/EO/903 indicating acceptance of the application as a national stage submission under 35 U.S.C. 371 will be issued in addition to the Filing Receipt, in due course.**

**New International Application Filed with the USPTO as a Receiving Office**
**If a new international application is being filed and the international application includes the necessary components for an international filing date (see PCT Article 11 and MPEP 1810), a Notification of the International Application Number and of the International Filing Date (Form PCT/RO/105) will be issued in due course, subject to prescriptions concerning national security, and the date shown on this Acknowledgement Receipt will establish the international filing date of the application.**

UNITED STATES PATENT AND TRADEMARK OFFICE

UNITED STATES DEPARTMENT OF COMMERCE
United States Patent and Trademark Office
Address: COMMISSIONER FOR PATENTS
P.O. Box 1450
Alexandria, Virginia 22313-1450
www.uspto.gov

| APPLICATION NUMBER | FILING or 371(c) DATE | GRP ART UNIT | FIL FEE REC'D | ATTY.DOCKET.NO | TOT CLAIMS | IND CLAIMS |
|---|---|---|---|---|---|---|
| 15/257,096 | 09/06/2016 | 2185 | 1740 | DP-322037 CIP | 19 | 2 |

**CONFIRMATION NO. 3519**

**FILING RECEIPT**

22851
Delphi Technologies, Inc.
P.O. Box 5052
M/C 483-400-402
Troy, MI 48007-5052

OC000000085845585

Date Mailed: 09/16/2016

Receipt is acknowledged of this non-provisional patent application. The application will be taken up for examination in due course. Applicant will be notified as to the results of the examination. Any correspondence concerning the application must include the following identification information: the U.S. APPLICATION NUMBER, FILING DATE, NAME OF APPLICANT, and TITLE OF INVENTION. Fees transmitted by check or draft are subject to collection. Please verify the accuracy of the data presented on this receipt. **If an error is noted on this Filing Receipt, please submit a written request for a Filing Receipt Correction. Please provide a copy of this Filing Receipt with the changes noted thereon. If you received a "Notice to File Missing Parts" for this application, please submit any corrections to this Filing Receipt with your reply to the Notice. When the USPTO processes the reply to the Notice, the USPTO will generate another Filing Receipt incorporating the requested corrections**

**Inventor(s)**

Robert M. Voto, Clarkston, MI;
Shyambabu Yeda, Rochester Hills, MI;
Craig Allan Petku, Clarkston, MI;

**Applicant(s)**

DELPHI TECHNOLOGIES, INC., TROY, MI;

**Power of Attorney:** None

**Domestic Priority data as claimed by applicant**

This application is a CIP of 14/487,947 09/16/2014 PAT 9460037
which claims benefit of 61/882,915 09/26/2013

**Foreign Applications** for which priority is claimed (You may be eligible to benefit from the **Patent Prosecution Highway** program at the USPTO. Please see http://www.uspto.gov for more information.) - None.
*Foreign application information must be provided in an Application Data Sheet in order to constitute a claim to foreign priority. See 37 CFR 1.55 and 1.76.*

**Permission to Access Application via Priority Document Exchange:** Yes

**Permission to Access Search Results:** Yes

Applicant may provide or rescind an authorization for access using Form PTO/SB/39 or Form PTO/SB/69 as appropriate.

**If Required, Foreign Filing License Granted:** 09/15/2016



**Microchip Ex. 1006, p. 52**
**Microchip v. Aptiv**
**IPR2024-00495**

The country code and number of your priority application, to be used for filing abroad under the Paris Convention, is **US 15/257,096**

**Projected Publication Date:** 12/22/2016

**Non-Publication Request:** No

**Early Publication Request:** No
**Title**

FLEXIBLE MOBILE DEVICE CONNECTIVITY TO AUTOMOTIVE SYSTEMS WITH USB HUBS

**Preliminary Class**

710

**Statement under 37 CFR 1.55 or 1.78 for AIA (First Inventor to File) Transition Applications:** No

## PROTECTING YOUR INVENTION OUTSIDE THE UNITED STATES

Since the rights granted by a U.S. patent extend only throughout the territory of the United States and have no effect in a foreign country, an inventor who wishes patent protection in another country must apply for a patent in a specific country or in regional patent offices. Applicants may wish to consider the filing of an international application under the Patent Cooperation Treaty (PCT). An international (PCT) application generally has the same effect as a regular national patent application in each PCT-member country. The PCT process **simplifies** the filing of patent applications on the same invention in member countries, but **does not result** in a grant of "an international patent" and does not eliminate the need of applicants to file additional documents and fees in countries where patent protection is desired.

Almost every country has its own patent law, and a person desiring a patent in a particular country must make an application for patent in that country in accordance with its particular laws. Since the laws of many countries differ in various respects from the patent law of the United States, applicants are advised to seek guidance from specific foreign countries to ensure that patent rights are not lost prematurely.

Applicants also are advised that in the case of inventions made in the United States, the Director of the USPTO must issue a license before applicants can apply for a patent in a foreign country. The filing of a U.S. patent application serves as a request for a foreign filing license. The application's filing receipt contains further information and guidance as to the status of applicant's license for foreign filing.

Applicants may wish to consult the USPTO booklet, "General Information Concerning Patents" (specifically, the section entitled "Treaties and Foreign Patents") for more information on timeframes and deadlines for filing foreign patent applications. The guide is available either by contacting the USPTO Contact Center at 800-786-9199, or it can be viewed on the USPTO website at http://www.uspto.gov/web/offices/pac/doc/general/index.html.

For information on preventing theft of your intellectual property (patents, trademarks and copyrights), you may wish to consult the U.S. Government website, http://www.stopfakes.gov. Part of a Department of Commerce initiative, this website includes self-help "toolkits" giving innovators guidance on how to protect intellectual property in specific countries such as China, Korea and Mexico. For questions regarding patent enforcement issues, applicants may call the U.S. Government hotline at 1-866-999-HALT (1-866-999-4258).



**Microchip Ex. 1006, p. 53**
**Microchip v. Aptiv**
**IPR2024-00495**

## LICENSE FOR FOREIGN FILING UNDER

## Title 35, United States Code, Section 184

## Title 37, Code of Federal Regulations, 5.11 & 5.15

**GRANTED**

The applicant has been granted a license under 35 U.S.C. 184, if the phrase "IF REQUIRED, FOREIGN FILING LICENSE GRANTED" followed by a date appears on this form. Such licenses are issued in all applications where the conditions for issuance of a license have been met, regardless of whether or not a license may be required as set forth in 37 CFR 5.15. The scope and limitations of this license are set forth in 37 CFR 5.15(a) unless an earlier license has been issued under 37 CFR 5.15(b). The license is subject to revocation upon written notification. The date indicated is the effective date of the license, unless an earlier license of similar scope has been granted under 37 CFR 5.13 or 5.14.

This license is to be retained by the licensee and may be used at any time on or after the effective date thereof unless it is revoked. This license is automatically transferred to any related applications(s) filed under 37 CFR 1.53(d). This license is not retroactive.

The grant of a license does not in any way lessen the responsibility of a licensee for the security of the subject matter as imposed by any Government contract or the provisions of existing laws relating to espionage and the national security or the export of technical data. Licensees should apprise themselves of current regulations especially with respect to certain countries, of other agencies, particularly the Office of Defense Trade Controls, Department of State (with respect to Arms, Munitions and Implements of War (22 CFR 121-128)); the Bureau of Industry and Security, Department of Commerce (15 CFR parts 730-774); the Office of Foreign AssetsControl, Department of Treasury (31 CFR Parts 500+) and the Department of Energy.

**NOT GRANTED**

No license under 35 U.S.C. 184 has been granted at this time, if the phrase "IF REQUIRED, FOREIGN FILING LICENSE GRANTED" DOES NOT appear on this form. Applicant may still petition for a license under 37 CFR 5.12, if a license is desired before the expiration of 6 months from the filing date of the application. If 6 months has lapsed from the filing date of this application and the licensee has not received any indication of a secrecy order under 35 U.S.C. 181, the licensee may foreign file the application pursuant to 37 CFR 5.15(b).

---

## *SelectUSA*

The United States represents the largest, most dynamic marketplace in the world and is an unparalleled location for business investment, innovation, and commercialization of new technologies. The U.S. offers tremendous resources and advantages for those who invest and manufacture goods here. Through SelectUSA, our nation works to promote and facilitate business investment. SelectUSA provides information assistance to the international investor community; serves as an ombudsman for existing and potential investors; advocates on behalf of U.S. cities, states, and regions competing for global investment; and counsels U.S. economic development organizations on investment attraction best practices. To learn more about why the United States is the best country in the world to develop technology, manufacture products, deliver services, and grow your business, visit http://www.SelectUSA.gov or call +1-202-482-6800.



**Microchip Ex. 1006, p. 54**
**Microchip v. Aptiv**
**IPR2024-00495**

# PATENT APPLICATION FEE DETERMINATION RECORD

Substitute for Form PTO-875

Application or Docket Number
15/257,096

## APPLICATION AS FILED - PART I

| FOR | (Column 1) NUMBER FILED | (Column 2) NUMBER EXTRA | SMALL ENTITY RATE($) | SMALL ENTITY FEE($) | OR | OTHER THAN SMALL ENTITY RATE($) | OTHER THAN SMALL ENTITY FEE($) |
|---|---|---|---|---|---|---|---|
| BASIC FEE (37 CFR 1.16(a), (b), or (c)) | N/A | N/A | N/A | | | N/A | 280 |
| SEARCH FEE (37 CFR 1.16(k), (i), or (m)) | N/A | N/A | N/A | | | N/A | 600 |
| EXAMINATION FEE (37 CFR 1.16(o), (p), or (q)) | N/A | N/A | N/A | | | N/A | 720 |
| TOTAL CLAIMS (37 CFR 1.16(i)) | 19 minus 20 = | * | | | OR | x 80 = | 0.00 |
| INDEPENDENT CLAIMS (37 CFR 1.16(h)) | 2 minus 3 = | * | | | | x 420 = | 0.00 |
| APPLICATION SIZE FEE (37 CFR 1.16(s)) | If the specification and drawings exceed 100 sheets of paper, the application size fee due is $310 ($155 for small entity) for each additional 50 sheets or fraction thereof. See 35 U.S.C. 41(a)(1)(G) and 37 CFR 1.16(s). | | | | | | 0.00 |
| MULTIPLE DEPENDENT CLAIM PRESENT (37 CFR 1.16(j)) | | | | | | | 0.00 |
| * If the difference in column 1 is less than zero, enter "0" in column 2. | | | TOTAL | | | TOTAL | 1600 |

## APPLICATION AS AMENDED - PART II

| | | (Column 1) CLAIMS REMAINING AFTER AMENDMENT | | (Column 2) HIGHEST NUMBER PREVIOUSLY PAID FOR | (Column 3) PRESENT EXTRA | SMALL ENTITY RATE($) | SMALL ENTITY ADDITIONAL FEE($) | OR | OTHER THAN SMALL ENTITY RATE($) | OTHER THAN SMALL ENTITY ADDITIONAL FEE($) |
|---|---|---|---|---|---|---|---|---|---|---|
| AMENDMENT A | Total (37 CFR 1.16(i)) | * | Minus | ** | = | x = | | OR | x = | |
| AMENDMENT A | Independent (37 CFR 1.16(h)) | * | Minus | *** | = | x = | | OR | x = | |
| AMENDMENT A | Application Size Fee (37 CFR 1.16(s)) | | | | | | | | | |
| AMENDMENT A | FIRST PRESENTATION OF MULTIPLE DEPENDENT CLAIM (37 CFR 1.16(j)) | | | | | | | OR | | |
| | | | | | | TOTAL ADD'L FEE | | OR | TOTAL ADD'L FEE | |

| | | (Column 1) CLAIMS REMAINING AFTER AMENDMENT | | (Column 2) HIGHEST NUMBER PREVIOUSLY PAID FOR | (Column 3) PRESENT EXTRA | RATE($) | ADDITIONAL FEE($) | OR | RATE($) | ADDITIONAL FEE($) |
|---|---|---|---|---|---|---|---|---|---|---|
| AMENDMENT B | Total (37 CFR 1.16(i)) | * | Minus | ** | = | x = | | OR | x = | |
| AMENDMENT B | Independent (37 CFR 1.16(h)) | * | Minus | *** | = | x = | | OR | x = | |
| AMENDMENT B | Application Size Fee (37 CFR 1.16(s)) | | | | | | | | | |
| AMENDMENT B | FIRST PRESENTATION OF MULTIPLE DEPENDENT CLAIM (37 CFR 1.16(j)) | | | | | | | OR | | |
| | | | | | | TOTAL ADD'L FEE | | OR | TOTAL ADD'L FEE | |

* If the entry in column 1 is less than the entry in column 2, write "0" in column 3.
** If the "Highest Number Previously Paid For" IN THIS SPACE is less than 20, enter "20".
*** If the "Highest Number Previously Paid For" IN THIS SPACE is less than 3, enter "3".
The "Highest Number Previously Paid For" (Total or Independent) is the highest found in the appropriate box in column 1.

UNITED STATES PATENT AND TRADEMARK OFFICE

UNITED STATES DEPARTMENT OF COMMERCE
United States Patent and Trademark Office
Address: COMMISSIONER FOR PATENTS
P.O. Box 1450
Alexandria, Virginia 22313-1450
www.uspto.gov

| APPLICATION NUMBER | FILING OR 371(C) DATE | FIRST NAMED APPLICANT | ATTY. DOCKET NO./TITLE |
|---|---|---|---|
| 15/257,096 | 09/06/2016 | Robert M. Voto | DP-322037 CIP |

**CONFIRMATION NO. 3519**

22851
Delphi Technologies, Inc.
P.O. Box 5052
M/C 483-400-402
Troy, MI 48007-5052

**INFORMAL NOTICE**

*OC000000085845586*

Date Mailed: 09/16/2016

## INFORMATIONAL NOTICE TO APPLICANT

Applicant is notified that the above-identified application contains the deficiencies noted below. No period for reply is set forth in this notice for correction of these deficiencies. However, if a deficiency relates to the inventor's oath or declaration, the applicant must file an oath or declaration in compliance with 37 CFR 1.63, or a substitute statement in compliance with 37 CFR 1.64, executed by or with respect to each actual inventor no later than the expiration of the time period set in the "Notice of Allowability" to avoid abandonment. See 37 CFR 1.53(f).

The item(s) indicated below are also required and should be submitted with any reply to this notice to avoid further processing delays.

- A properly executed inventor's oath or declaration has not been received for the following inventor(s):
  Robert M. Voto
  Shyambabu Yeda
  Craig Allan Petku

Questions about the contents of this notice and the requirements it sets forth should be directed to the Office of Data Management, Application Assistance Unit, at **(571) 272-4000** or **(571) 272-4200** or **1-888-786-0101**.

/mteklemichael/



**Microchip Ex. 1006, p. 56**
**Microchip v. Aptiv**
**IPR2024-00495**

PTO/SB/26 (08-08)
Approved for use through 09/30/2008. OMB 0651-0031
U.S. Patent and Trademark Office; U.S. DEPARTMENT OF COMMERCE
Under the Paperwork Reduction Act of 1995, no persons are required to respond to a collection of information unless it displays a valid OMB control number.

| TERMINAL DISCLAIMER TO OBVIATE A DOUBLE PATENTING REJECTION OVER A "PRIOR" PATENT | Docket Number (Optional) DP-322037 CIP |
|---|---|

In re Application of: Robert M. Voto

Application No.: 15/257,096

Filed: 09-06-2016

For: FLEXIBLE MOBILE DEVICE CONNECTIVITY TO AUTOMOTIVE SYSTEMS WITH USB HUBS

The owner*, Delphi Technologies, Inc., of 100 percent interest in the instant application hereby disclaims, except as provided below, the terminal part of the statutory term of any patent granted on the instant application which would extend beyond the expiration date of the full statutory term **prior patent** No. 9,460,037 as the term of said prior patent is defined in 35 U.S.C. 154 and 173, and as the term of said **prior patent** is presently shortened by any terminal disclaimer. The owner hereby agrees that any patent so granted on the instant application shall be enforceable only for and during such period that it and the **prior patent** are commonly owned. This agreement runs with any patent granted on the instant application and is binding upon the grantee, its successors or assigns.

In making the above disclaimer, the owner does not disclaim the terminal part of the term of any patent granted on the instant application that would extend to the expiration date of the full statutory term as defined in 35 U.S.C. 154 and 173 of the **prior patent**, "as the term of said **prior patent** is presently shortened by any terminal disclaimer," in the event that said **prior patent** later:

expires for failure to pay a maintenance fee;
is held unenforceable;
is found invalid by a court of competent jurisdiction;
is statutorily disclaimed in whole or terminally disclaimed under 37 CFR 1.321;
has all claims canceled by a reexamination certificate;
is reissued; or
is in any manner terminated prior to the expiration of its full statutory term as presently shortened by any terminal disclaimer.

Check either box 1 or 2 below, if appropriate.

1. ☐ For submissions on behalf of a business/organization (e.g., corporation, partnership, university, government agency, etc.), the undersigned is empowered to act on behalf of the business/organization.

I hereby declare that all statements made herein of my own knowledge are true and that all statements made on information and belief are believed to be true; and further that these statements were made with the knowledge that willful false statements and the like so made are punishable by fine or imprisonment, or both, under Section 1001 of Title 18 of the United States Code and that such willful false statements may jeopardize the validity of the application or any patent issued thereon.

2. ☑ The undersigned is an attorney or agent of record. Reg. No. 69,783

/Robert J. Myers/ — Signature
10-13-2016 — Date

Robert J. Myers
Typed or printed name

248-813-2512
Telephone Number

☑ Terminal disclaimer fee under 37 CFR 1.20(d) included.

**WARNING: Information on this form may become public. Credit card information should not be included on this form. Provide credit card information and authorization on PTO-2038.**

*Statement under 37 CFR 3.73(b) is required if terminal disclaimer is signed by the assignee (owner).
Form PTO/SB/96 may be used for making this certification. See MPEP § 324.

This collection of information is required by 37 CFR 1.321. The information is required to obtain or retain a benefit by the public which is to file (and by the USPTO to process) an application. Confidentiality is governed by 35 U.S.C. 122 and 37 CFR 1.11 and 1.14. This collection is estimated to take 12 minutes to complete, including gathering, preparing, and submitting the completed application form to the USPTO. Time will vary depending upon the individual case. Any comments on the amount of time you require to complete this form and/or suggestions for reducing this burden, should be sent to the Chief Information Officer, U.S. Patent and Trademark Office, U.S. Department of Commerce, P.O. Box 1450, Alexandria, VA 22313-1450. DO NOT SEND FEES OR COMPLETED FORMS TO THIS ADDRESS. **SEND TO: Commissioner for Patents, P.O. Box 1450, Alexandria, VA 22313-1450.**

If you need assistance in completing the form, call 1-800-PTO-9199 and select option 2.

# Privacy Act Statement

The **Privacy Act of 1974 (P.L. 93-579)** requires that you be given certain information in connection with your submission of the attached form related to a patent application or patent. Accordingly, pursuant to the requirements of the Act, please be advised that: (1) the general authority for the collection of this information is 35 U.S.C. 2(b)(2); (2) furnishing of the information solicited is voluntary; and (3) the principal purpose for which the information is used by the U.S. Patent and Trademark Office is to process and/or examine your submission related to a patent application or patent. If you do not furnish the requested information, the U.S. Patent and Trademark Office may not be able to process and/or examine your submission, which may result in termination of proceedings or abandonment of the application or expiration of the patent.

The information provided by you in this form will be subject to the following routine uses:

1. The information on this form will be treated confidentially to the extent allowed under the Freedom of Information Act (5 U.S.C. 552) and the Privacy Act (5 U.S.C 552a). Records from this system of records may be disclosed to the Department of Justice to determine whether disclosure of these records is required by the Freedom of Information Act.
2. A record from this system of records may be disclosed, as a routine use, in the course of presenting evidence to a court, magistrate, or administrative tribunal, including disclosures to opposing counsel in the course of settlement negotiations.
3. A record in this system of records may be disclosed, as a routine use, to a Member of Congress submitting a request involving an individual, to whom the record pertains, when the individual has requested assistance from the Member with respect to the subject matter of the record.
4. A record in this system of records may be disclosed, as a routine use, to a contractor of the Agency having need for the information in order to perform a contract. Recipients of information shall be required to comply with the requirements of the Privacy Act of 1974, as amended, pursuant to 5 U.S.C. 552a(m).
5. A record related to an International Application filed under the Patent Cooperation Treaty in this system of records may be disclosed, as a routine use, to the International Bureau of the World Intellectual Property Organization, pursuant to the Patent Cooperation Treaty.
6. A record in this system of records may be disclosed, as a routine use, to another federal agency for purposes of National Security review (35 U.S.C. 181) and for review pursuant to the Atomic Energy Act (42 U.S.C. 218(c)).
7. A record from this system of records may be disclosed, as a routine use, to the Administrator, General Services, or his/her designee, during an inspection of records conducted by GSA as part of that agency's responsibility to recommend improvements in records management practices and programs, under authority of 44 U.S.C. 2904 and 2906. Such disclosure shall be made in accordance with the GSA regulations governing inspection of records for this purpose, and any other relevant (*i.e.*, GSA or Commerce) directive. Such disclosure shall not be used to make determinations about individuals.
8. A record from this system of records may be disclosed, as a routine use, to the public after either publication of the application pursuant to 35 U.S.C. 122(b) or issuance of a patent pursuant to 35 U.S.C. 151. Further, a record may be disclosed, subject to the limitations of 37 CFR 1.14, as a routine use, to the public if the record was filed in an application which became abandoned or in which the proceedings were terminated and which application is referenced by either a published application, an application open to public inspection or an issued patent.
9. A record from this system of records may be disclosed, as a routine use, to a Federal, State, or local law enforcement agency, if the USPTO becomes aware of a violation or potential violation of law or regulation.

# Electronic Patent Application Fee Transmittal

| | |
|---|---|
| **Application Number:** | 15257096 |
| **Filing Date:** | 06-Sep-2016 |
| **Title of Invention:** | FLEXIBLE MOBILE DEVICE CONNECTIVITY TO AUTOMOTIVE SYSTEMS WITH USB HUBS |
| **First Named Inventor/Applicant Name:** | Robert M. Voto |
| **Filer:** | Lawrence Dean Hazelton/Kandace Powell |
| **Attorney Docket Number:** | DP-322037 CIP |

Filed as Large Entity

**Filing Fees for Utility under 35 USC 111(a)**

| Description | Fee Code | Quantity | Amount | Sub-Total in USD($) |
|---|---|---|---|---|
| **Basic Filing:** | | | | |
| **Pages:** | | | | |
| **Claims:** | | | | |
| **Miscellaneous-Filing:** | | | | |
| **Petition:** | | | | |
| **Patent-Appeals-and-Interference:** | | | | |
| **Post-Allowance-and-Post-Issuance:** | | | | |
| STATUTORY OR TERMINAL DISCLAIMER | 1814 | 1 | 160 | 160 |

| Description | Fee Code | Quantity | Amount | Sub-Total in USD($) |
|---|---|---|---|---|
| **Extension-of-Time:** | | | | |
| **Miscellaneous:** | | | | |
| | | | **Total in USD ($)** | **160** |

# Electronic Acknowledgement Receipt

| | |
|---|---|
| **EFS ID:** | 27205520 |
| **Application Number:** | 15257096 |
| **International Application Number:** | |
| **Confirmation Number:** | 3519 |
| **Title of Invention:** | FLEXIBLE MOBILE DEVICE CONNECTIVITY TO AUTOMOTIVE SYSTEMS WITH USB HUBS |
| **First Named Inventor/Applicant Name:** | Robert M. Voto |
| **Customer Number:** | 22851 |
| **Filer:** | Lawrence Dean Hazelton/Kandace Powell |
| **Filer Authorized By:** | Lawrence Dean Hazelton |
| **Attorney Docket Number:** | DP-322037 CIP |
| **Receipt Date:** | 13-OCT-2016 |
| **Filing Date:** | 06-SEP-2016 |
| **Time Stamp:** | 14:45:54 |
| **Application Type:** | Utility under 35 USC 111(a) |

## Payment information:

| | |
|---|---|
| Submitted with Payment | yes |
| Payment Type | DA |
| Payment was successfully received in RAM | $160 |
| RAM confirmation Number | 101416INTEFSW00001167500831 |
| Deposit Account | 500831 |
| Authorized User | Kandace Powell |

The Director of the USPTO is hereby authorized to charge indicated fees and credit any overpayment as follows:

37 CFR 1.21 (Miscellaneous fees and charges)

## File Listing:

| Document Number | Document Description | File Name | File Size(Bytes)/ Message Digest | Multi Part /.zip | Pages (if appl.) |
|---|---|---|---|---|---|
| 1 | Terminal Disclaimer Filed | DP322037_CIP_sb0026.pdf | 221489<br>3635e712b662c20fe94f5bd49ba4bbe39d3bf957 | no | 2 |
| **Warnings:** | | | | | |
| **Information:** | | | | | |
| 2 | Fee Worksheet (SB06) | fee-info.pdf | 30860<br>52c474fd07c1df31282831d2c3d588150e40f9d6 | no | 2 |
| **Warnings:** | | | | | |
| **Information:** | | | | | |
| | | **Total Files Size (in bytes):** | 252349 | | |

**This Acknowledgement Receipt evidences receipt on the noted date by the USPTO of the indicated documents, characterized by the applicant, and including page counts, where applicable. It serves as evidence of receipt similar to a Post Card, as described in MPEP 503.**

**New Applications Under 35 U.S.C. 111**
**If a new application is being filed and the application includes the necessary components for a filing date (see 37 CFR 1.53(b)-(d) and MPEP 506), a Filing Receipt (37 CFR 1.54) will be issued in due course and the date shown on this Acknowledgement Receipt will establish the filing date of the application.**

**National Stage of an International Application under 35 U.S.C. 371**
**If a timely submission to enter the national stage of an international application is compliant with the conditions of 35 U.S.C. 371 and other applicable requirements a Form PCT/DO/EO/903 indicating acceptance of the application as a national stage submission under 35 U.S.C. 371 will be issued in addition to the Filing Receipt, in due course.**

**New International Application Filed with the USPTO as a Receiving Office**
**If a new international application is being filed and the international application includes the necessary components for an international filing date (see PCT Article 11 and MPEP 1810), a Notification of the International Application Number and of the International Filing Date (Form PCT/RO/105) will be issued in due course, subject to prescriptions concerning national security, and the date shown on this Acknowledgement Receipt will establish the international filing date of the application.**

| Application Number | Application/Control No. | Applicant(s)/Patent under Reexamination | |
|---|---|---|---|
| | 15/257,096 | VOTO ET AL. | |
| | | | |

| Document Code - DISQ | Internal Document – DO NOT MAIL |
|---|---|

| TERMINAL DISCLAIMER | ☐ APPROVED | ☒ DISAPPROVED |
|---|---|---|
| **Date Filed : 13 October, 2016** | **This patent is subject to a Terminal Disclaimer** | |

## Approved/Disapproved by:

/CRYSTAL QUEEN/

**Technology Center:** PLRC

**Telephone:**

The person who signed the terminal disclaimer is not the applicant, patentee or an attorney or agent of record. 37 CFR 1.321(a) and (b). (See FP 14.26.08)

(Note: PoA can be given to a customer number, wherein all practitioners listed under the customer number have PoA. given to a list of practitioners by registration number, the list may not comprise more than 10 practitioners or a separate paper signed by a 37 CFR I.33(b) party must be in the record identifying which of the practitioners, up to 10, are recognized as having PoA. If the applicant is a juristic entity (e.g., corporation), a representative of the applicant cannot sign the TD unless it is established that the representative is a party authorized to act on behalf of the applicant.)

Also resubmit Td with this paper, NO FEE is required.

U.S. Patent and Trademark Office

PTO/SB/08a (01-10)
Approved for use through 07/31/2012. OMB 0651-0031
U.S. Patent and Trademark Office; U.S. DEPARTMENT OF COMMERCE
Under the Paperwork Reduction Act of 1995, no persons are required to respond to a collection of information unless it contains a valid OMB control number.

| INFORMATION DISCLOSURE STATEMENT BY APPLICANT ( Not for submission under 37 CFR 1.99) | | |
|---|---|---|
| | Application Number | 15257096 |
| | Filing Date | 2016-09-09 |
| | First Named Inventor | Robert M. Voto, et al. |
| | Art Unit | 2181 |
| | Examiner Name | Ernest Unelus |
| | Attorney Docket Number | DP-322037 CIP |

**U.S.PATENTS** Remove

| Examiner Initial* | Cite No | Patent Number | Kind Code[1] | Issue Date | Name of Patentee or Applicant of cited Document | Pages,Columns,Lines where Relevant Passages or Relevant Figures Appear |
|---|---|---|---|---|---|---|
| | 1 | 8447890 | B1 | 2013-05-21 | LeTourneur et al. | |
| | 2 | 8447598 | B2 | 2013-05-21 | Chutorash et al. | |
| | 3 | 7627708 | B2 | 2009-12-01 | Bohm et al. | |
| | 4 | 7523243 | B2 | 2009-04-21 | Bohm et al. | |
| | 5 | 7478191 | B2 | 2009-01-13 | Wurzburg et al. | |
| | 6 | 7280802 | B2 | 2007-10-09 | Grady | |
| | 7 | 7130656 | B2 | 2006-10-31 | Okagaki et al. | |
| | 8 | 6957287 | B2 | 2005-10-18 | Lou et al. | |

| INFORMATION DISCLOSURE STATEMENT BY APPLICANT ( Not for submission under 37 CFR 1.99) | Application Number | 15257096 |
|---|---|---|
| | Filing Date | 2016-09-09 |
| | First Named Inventor | Robert M. Voto, et al. |
| | Art Unit | 2181 |
| | Examiner Name | Ernest Unelus |
| | Attorney Docket Number | DP-322037 CIP |

| | | | | | | |
|---|---|---|---|---|---|---|
| | 9 | 6934793 | B2 | 2005-08-23 | Ying et al. | |
| | 10 | 6732219 | B1 | 2004-05-04 | Broyles | |
| | 11 | 6073188 | A | 2000-06-06 | FLEMING SCOTT M | |

If you wish to add additional U.S. Patent citation information please click the Add button. Add

**U.S.PATENT APPLICATION PUBLICATIONS** Remove

| Examiner Initial* | Cite No | Publication Number | Kind Code[1] | Publication Date | Name of Patentee or Applicant of cited Document | Pages,Columns,Lines where Relevant Passages or Relevant Figures Appear |
|---|---|---|---|---|---|---|
| | 1 | 20130106750 | A1 | 2013-05-02 | Kurosawa | |
| | 2 | 20130053003 | A1 | 2013-02-28 | King, II | |
| | 3 | 20120290859 | A1 | 2012-11-15 | Saladin et al. | |
| | 4 | 20120191811 | A1 | 2012-07-26 | Ng et al. | |
| | 5 | 20120134506 | A1 | 2012-05-31 | DeBiasio et al. | |
| | 6 | 20110124300 | A1 | 2011-05-26 | Sinai | |

| INFORMATION DISCLOSURE STATEMENT BY APPLICANT ( Not for submission under 37 CFR 1.99) | | |
|---|---|---|
| | Application Number | 15257096 |
| | Filing Date | 2016-09-09 |
| | First Named Inventor | Robert M. Voto, et al. |
| | Art Unit | 2181 |
| | Examiner Name | Ernest Unelus |
| | Attorney Docket Number | DP-322037 CIP |

| | | | | | | | |
|---|---|---|---|---|---|---|---|
| | 7 | 20110054721 | A1 | 2011-03-03 | Goodrich et al. | | |
| | 8 | 20090117890 | A1 | 2009-05-07 | Jacobsen et al. | | |
| | 9 | 20080005262 | A1 | 2008-01-03 | Wurzburg et al. | | |
| | 10 | 20070156293 | A1 | 2007-07-05 | Kellzi et al. | | |
| | 11 | 20070086724 | A1 | 2007-04-19 | Grady et al. | | |
| | 12 | 20070067553 | A1 | 2007-03-22 | Chang | | |
| | 13 | 20060056401 | A1 | 2006-03-16 | Bohm et al. | | |
| | 14 | 20030167345 | A1 | 2003-09-04 | Knight et al. | | |

If you wish to add additional U.S. Published Application citation information please click the Add button. Add

**FOREIGN PATENT DOCUMENTS** Remove

| Examiner Initial* | Cite No | Foreign Document Number[3] | Country Code[2] i | Kind Code[4] | Publication Date | Name of Patentee or Applicant of cited Document | Pages,Columns,Lines where Relevant Passages or Relevant Figures Appear | T[5] |
|---|---|---|---|---|---|---|---|---|
| | 1 | 2003256351 | JP | A | 2003-09-12 | FURUKAWA TADAO | | |

EFS Web 2.1.17

| INFORMATION DISCLOSURE STATEMENT BY APPLICANT ( Not for submission under 37 CFR 1.99) | Application Number | 15257096 |
|---|---|---|
| | Filing Date | 2016-09-09 |
| | First Named Inventor | Robert M. Voto, et al. |
| | Art Unit | 2181 |
| | Examiner Name | Ernest Unelus |
| | Attorney Docket Number | DP-322037 CIP |

| | | | | | | | | |
|---|---|---|---|---|---|---|---|---|
| | 2 | 470887 | TW | B | 2002-01-01 | JANG | | |

If you wish to add additional Foreign Patent Document citation information please click the Add button Add

**NON-PATENT LITERATURE DOCUMENTS** Remove

| Examiner Initials* | Cite No | Include name of the author (in CAPITAL LETTERS), title of the article (when appropriate), title of the item (book, magazine, journal, serial, symposium, catalog, etc), date, pages(s), volume-issue number(s), publisher, city and/or country where published. | T[5] |
|---|---|---|---|
| | 1 | "FFI Rapport-A STUDY OF COMPUTER INTERFACES FOR SOLDIER SYSTEMS", Lars Erik Olsen & Joakin Flathagen, Norwegian Defence Research Establishment, October 10, 2005 | |
| | 2 | "USB 2.0 Autoswitch User's Manual", Lindy Electronics Limited & Lindy-Elektronic GMBH, September 2002 | |
| | 3 | "APC USB 2.0 Host Controller - Device Driver Download", http://www.liutilities.com/devicedriver/apcusb20hostcontroller/, July 2002 | |
| | 4 | "Peripheral-Sharing Hardware Suits Education's Needs to a 'T'", Terian Tyre, T H E Journal (Technological Horizons In Education), October 1988 | |

If you wish to add additional non-patent literature document citation information please click the Add button Add

**EXAMINER SIGNATURE**

| Examiner Signature | | Date Considered | |
|---|---|---|---|

*EXAMINER: Initial if reference considered, whether or not citation is in conformance with MPEP 609. Draw line through a citation if not in conformance and not considered. Include copy of this form with next communication to applicant.

[1] See Kind Codes of USPTO Patent Documents at www.USPTO.GOV or MPEP 901.04. [2] Enter office that issued the document, by the two-letter code (WIPO Standard ST.3). [3] For Japanese patent documents, the indication of the year of the reign of the Emperor must precede the serial number of the patent document. [4] Kind of document by the appropriate symbols as indicated on the document under WIPO Standard ST.16 if possible. [5] Applicant is to place a check mark here if English language translation is attached.

| INFORMATION DISCLOSURE STATEMENT BY APPLICANT ( Not for submission under 37 CFR 1.99) | Application Number | 15257096 |
|---|---|---|
| | Filing Date | 2016-09-09 |
| | First Named Inventor | Robert M. Voto, et al. |
| | Art Unit | 2181 |
| | Examiner Name | Ernest Unelus |
| | Attorney Docket Number | DP-322037 CIP |

**CERTIFICATION STATEMENT**

Please see 37 CFR 1.97 and 1.98 to make the appropriate selection(s):

That each item of information contained in the information disclosure statement was first cited in any communication from a foreign patent office in a counterpart foreign application not more than three months prior to the filing of the information disclosure statement. See 37 CFR 1.97(e)(1).

**OR**

☒ That no item of information contained in the information disclosure statement was cited in a communication from a foreign patent office in a counterpart foreign application, and, to the knowledge of the person signing the certification after making reasonable inquiry, no item of information contained in the information disclosure statement was known to any individual designated in 37 CFR 1.56(c) more than three months prior to the filing of the information disclosure statement. See 37 CFR 1.97(e)(2).

See attached certification statement.

The fee set forth in 37 CFR 1.17 (p) has been submitted herewith.

A certification statement is not submitted herewith.

**SIGNATURE**

A signature of the applicant or representative is required in accordance with CFR 1.33, 10.18. Please see CFR 1.4(d) for the form of the signature.

| Signature | /Robert J. Myers/ | Date (YYYY-MM-DD) | 2016-10-24 |
|---|---|---|---|
| Name/Print | Robert J. Myers | Registration Number | 69,783 |

This collection of information is required by 37 CFR 1.97 and 1.98. The information is required to obtain or retain a benefit by the public which is to file (and by the USPTO to process) an application. Confidentiality is governed by 35 U.S.C. 122 and 37 CFR 1.14. This collection is estimated to take 1 hour to complete, including gathering, preparing and submitting the completed application form to the USPTO. Time will vary depending upon the individual case. Any comments on the amount of time you require to complete this form and/or suggestions for reducing this burden, should be sent to the Chief Information Officer, U.S. Patent and Trademark Office, U.S. Department of Commerce, P.O. Box 1450, Alexandria, VA 22313-1450. DO NOT SEND FEES OR COMPLETED FORMS TO THIS ADDRESS. **SEND TO: Commissioner for Patents, P.O. Box 1450, Alexandria, VA 22313-1450.**

## Privacy Act Statement

The Privacy Act of 1974 (P.L. 93-579) requires that you be given certain information in connection with your submission of the attached form related to a patent application or patent. Accordingly, pursuant to the requirements of the Act, please be advised that: (1) the general authority for the collection of this information is 35 U.S.C. 2(b)(2); (2) furnishing of the information solicited is voluntary; and (3) the principal purpose for which the information is used by the U.S. Patent and Trademark Office is to process and/or examine your submission related to a patent application or patent. If you do not furnish the requested information, the U.S. Patent and Trademark Office may not be able to process and/or examine your submission, which may result in termination of proceedings or abandonment of the application or expiration of the patent.

The information provided by you in this form will be subject to the following routine uses:

1. The information on this form will be treated confidentially to the extent allowed under the Freedom of Information Act (5 U.S.C. 552) and the Privacy Act (5 U.S.C. 552a). Records from this system of records may be disclosed to the Department of Justice to determine whether the Freedom of Information Act requires disclosure of these record s.

2. A record from this system of records may be disclosed, as a routine use, in the course of presenting evidence to a court, magistrate, or administrative tribunal, including disclosures to opposing counsel in the course of settlement negotiations.

3. A record in this system of records may be disclosed, as a routine use, to a Member of Congress submitting a request involving an individual, to whom the record pertains, when the individual has requested assistance from the Member with respect to the subject matter of the record.

4. A record in this system of records may be disclosed, as a routine use, to a contractor of the Agency having need for the information in order to perform a contract. Recipients of information shall be required to comply with the requirements of the Privacy Act of 1974, as amended, pursuant to 5 U.S.C. 552a(m).

5. A record related to an International Application filed under the Patent Cooperation Treaty in this system of records may be disclosed, as a routine use, to the International Bureau of the World Intellectual Property Organization, pursuant to the Patent Cooperation Treaty.

6. A record in this system of records may be disclosed, as a routine use, to another federal agency for purposes of National Security review (35 U.S.C. 181) and for review pursuant to the Atomic Energy Act (42 U.S.C. 218(c)).

7. A record from this system of records may be disclosed, as a routine use, to the Administrator, General Services, or his/her designee, during an inspection of records conducted by GSA as part of that agency's responsibility to recommend improvements in records management practices and programs, under authority of 44 U.S.C. 2904 and 2906. Such disclosure shall be made in accordance with the GSA regulations governing inspection of records for this purpose, and any other relevant (i.e., GSA or Commerce) directive. Such disclosure shall not be used to make determinations about individuals.

8. A record from this system of records may be disclosed, as a routine use, to the public after either publication of the application pursuant to 35 U.S.C. 122(b) or issuance of a patent pursuant to 35 U.S.C. 151. Further, a record may be disclosed, subject to the limitations of 37 CFR 1.14, as a routine use, to the public if the record was filed in an application which became abandoned or in which the proceedings were terminated and which application is referenced by either a published application, an application open to public inspections or an issued patent.

9. A record from this system of records may be disclosed, as a routine use, to a Federal, State, or local law enforcement agency, if the USPTO becomes aware of a violation or potential violation of law or regulation.

Espacenet

# Bibliographic data: JP2003256351 (A) — 2003-09-12

USB HUB

**Inventor(s):** FURUKAWA TADAO ± (FURUKAWA TADAO)

**Applicant(s):** YAMAHA CORP ± (YAMAHA CORP)

**Classification:** - **international:** ***G06F13/14;*** (IPC1-7): G06F13/14
- **cooperative:**

**Application number:** JP20020056792 20020304 Global Dossier

**Priority number(s):** JP20020056792 20020304

Abstract of JP2003256351 (A)

PROBLEM TO BE SOLVED: To provide an USB hub, in which a plurality of host computers is capable of jointly owning peripheral equipment and switching operations are needless. ;SOLUTION: The USB hub comprises; a plurality of connecting ports 2 capable of connecting with a plurality of host computers 21 to 24 that packet- transmit and receive data assigned addresses; a plurality of connecting ports 3 capable of connecting with a plurality of peripheral equipment 25 to 28 that packet-transmit and receive data assigned addresses; FIFO memories 11 and 17 temporarily storing packet data inputted from the ports 2 and 3; and a control circuit C establishing connection between the host computers 21 to 24 and peripheral equipment 25 to 28 and controlling transmission of data at the basis of address information of the peripheral equipment 25 to 28 added to the packet data stored in the FIFO memories 11 and 17. ;COPYRIGHT: (C)2003,JPO

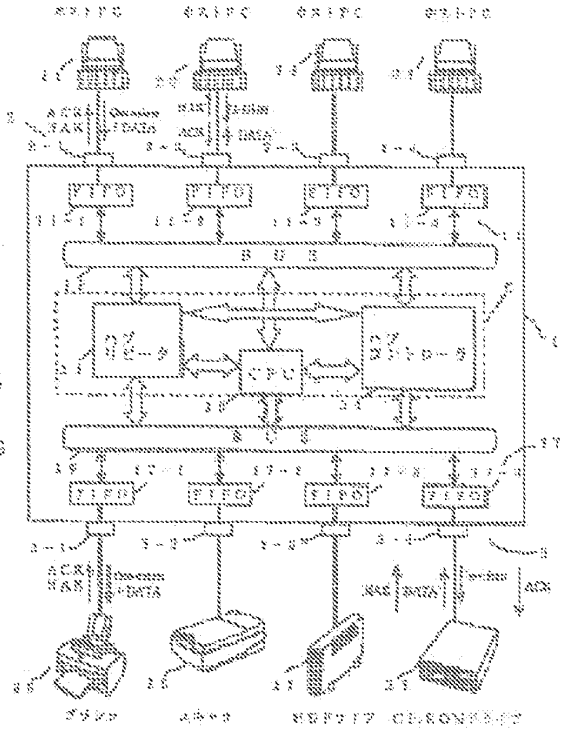



**Microchip Ex. 1006, p. 70**
**Microchip v. Aptiv**
**IPR2024-00495**

**Microchip Ex. 1006, p. 71**
**Microchip v. Aptiv**
**IPR2024-00495**

(19)日本国特許庁（ＪＰ）　(12) 公開特許公報（Ａ）　(11)特許出願公開番号
特開2003－256351
（P2003－256351A）
(43)公開日　平成15年9月12日(2003.9.12)

| (51)Int.Cl.⁷ | 識別記号 | ＦＩ | テーマコード（参考） |
|---|---|---|---|
| Ｇ０６Ｆ　13/14 | ３１０ | Ｇ０６Ｆ　13/14 | ３１０Ｄ　５Ｂ０１４ |

審査請求　未請求　請求項の数４　ＯＬ　（全５頁）

(21)出願番号　特願2002－56792(P2002－56792)
(22)出願日　平成14年3月4日(2002.3.4)

(71)出願人　000004075
ヤマハ株式会社
静岡県浜松市中沢町10番１号
(72)発明者　古川　出維
静岡県浜松市中沢町10番１号　ヤマハ株式会社内
(74)代理人　100097820
弁理士　伊丹　勝
Ｆターム(参考)　5B014 HA11

(54)【発明の名称】　ＵＳＢハブ

(57)【要約】
【課題】　複数のホストコンピュータが周辺機器を共有することができ、かつ切替操作が不要なＵＳＢハブを提供する。
【解決手段】　アドレスを割り当てられデータをパケット送受信する複数台のホストコンピュータ２１－２４を接続可能とした複数個の接続ポート２と、アドレスを割り当てられデータを送受信する複数台の周辺機器２５－２８を接続可能とした複数個の接続ポート３と、これらのポート２，３から入力されるパケットデータを一時保持するＦＩＦＯメモリ１１，１７と、このＦＩＦＯメモリ１１，１７に保持されたパケットデータに付加された前記周辺機器２５－２８のアドレス情報に基づき、ホストコンピュータ２１－２４と前記周辺機器２５－２８との間の接続を確立しデータの転送を制御する制御回路Ｃとを備えた。

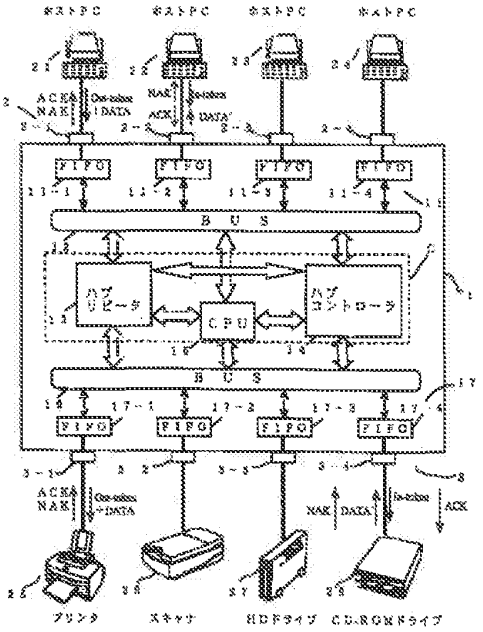

【特許請求の範囲】

【請求項1】 アドレスを割り当てられパケットデータを送受信する複数台のホストコンピュータを接続可能とした複数個の第1ポートと、
アドレスを割り当てられパケットデータを送受信する複数台の周辺機器を接続可能とした複数個の第2ポートと、
これらの第1ポート及び第2ポートから入力される前記パケットデータを一時保持するＦＩＦＯメモリと、
このＦＩＦＯメモリに保持されたパケットデータに付加された前記周辺機器のアドレス情報に基づき、前記ホストコンピュータと前記周辺機器との間の接続を確立しデータの転送を制御する制御回路とを備えたことを特徴とするＵＳＢハブ。

【請求項2】 前記ＦＩＦＯメモリは、前記ホストコンピュータごとに設けられた請求項1に記載のＵＳＢハブ。

【請求項3】 前記ＦＩＦＯメモリは、前記周辺機器ごとに設けられた請求項1又は2に記載のＵＳＢハブ。

【請求項4】 前記制御回路は、前記周辺機器の1つに対し2台以上の前記ホストコンピュータからデータの送信又は受信の要求があった場合に、前記ホストコンピュータのうちの1つと前記周辺機器の1つとの間の接続を確立させ、他のホストコンピュータからのデータは接続中の前記ホストコンピュータでのデータの送信又は受信が完了するまで前記ＦＩＦＯメモリに一時保持させるようにした請求項1乃至3のいずれか1項に記載のＵＳＢハブ。

【発明の詳細な説明】

【０００１】

【発明の属する技術分野】本発明は、ＵＳＢ（Universal Serial bus）インターフェースに対応した各種周辺機器を複数接続するためのＵＳＢハブに関し、さらに詳しくは、周辺機器だけでなく複数台のコンピュータを接続できるように構成したＵＳＢハブに関する。

【０００２】

【従来の技術】近年、コンピュータと周辺機器とを接続するインターフェースの方式として、ＵＳＢ規格のインターフェースが広く採用されている。コンピュータの電源を入れた状態で接続しても周辺機器の認識が可能であること（ホットプラグ）、階層的な接続をすることにより最大１２７個まで周辺機器を接続可能であるなど、コンピュータの利便性を向上させるのに役立っている。また、このようなＵＳＢ対応機器を複数同時に接続するための装置として、いわゆるＵＳＢハブも普及している。

【０００３】

【発明が解決しようとする課題】しかし、ＵＳＢインターフェースが複数台のホストコンピュータの存在を許さない規格となっていることから、ＵＳＢハブ自体も、単一のコンピュータのみが接続可能になっている。このため、複数のＰＣで１つの周辺機器を共有することは、ＵＳＢハブによっては困難であった。この点、特開2001-51939号公報に記載されたＵＳＢハブは、複数のホストコンピュータを選択的に周辺機器に接続する切替回路を備えており、これにより複数のホストコンピュータを同時に接続可能にしている。しかし、この構成では、複数のホストコンピュータが同時に周辺機器を利用することはできないし、周辺機器の使用を許可するホストコンピュータを切り換える際には逐一切替回路を動作させなければならない。また、切替を行う度に周辺機器のデバイスドライバをロード、アンロードしなければならないことから、切り替えに長い時間を要することになる。この発明は、上述した問題点に鑑みてなされたものであり複数のコンピュータが周辺機器を共有することができ、かつ切替操作が不要なＵＳＢハブを提供することを目的とする。

【０００４】

【課題を解決するための手段】上記目的達成のため、本発明に係るＵＳＢハブは、アドレスを割り当てられパケットデータを送受信する複数台のホストコンピュータを接続可能とした複数個の第1ポートと、アドレスを割り当てられパケットデータを送受信する複数台の周辺機器を接続可能とした複数個の第2ポートと、これらの第1ポート及び第2ポートから入力される前記パケットデータを一時保持するＦＩＦＯメモリと、このＦＩＦＯメモリに保持されたパケットデータに付加された前記周辺機器のアドレス情報に基づき、前記ホストコンピュータと前記周辺機器との間の接続を確立しデータの転送を制御する制御回路とを備えたことを特徴とする。

【０００５】この発明によれば、制御回路により、送信元のホストコンピュータ（又は周辺機器）と送信先の周辺機器（又はホストコンピュータ）との間の接続が前記アドレス情報に基づいて確立されるので、ＵＳＢインターフェースの下でも複数のホストコンピュータの存在が可能となる。また、接続の確立、解除するごとに逐一デバイスドライバをロード、アンロードする煩わしさが無い。

【０００６】この発明において、前記ＦＩＦＯメモリは、前記ホストコンピュータごとに設けるのが好適である。さらに、前記ＦＩＦＯメモリは、前記周辺機器ごとに設けるのが好適である。また、前記制御回路は、前記周辺機器の1つに対し2台以上の前記ホストコンピュータからデータの送信又は受信の要求があった場合に、前記ホストコンピュータのうちの1つと前記周辺機器の1つとの間の接続を確立させ、他のホストコンピュータからのデータは接続中の前記ホストコンピュータでのデータの送信又は受信が完了するまで前記ＦＩＦＯメモリに一時保持させるようにするとよい。このようにすることにより、複数のホストコンピュータからのデータが衝突することが回避される。

【0007】

【発明の実施の形態】次に、本発明の実施の形態を、図面に基づいて説明する。図1は、本発明の実施の形態に係るUSBハブ1と、このUSBハブ1に接続された複数のホストコンピュータ（以下ホストPCという）21—24及び周辺機器（図1では、プリンタ25、スキャナ26、ハードディスクドライブ27、CD−ROMドライブ28としている）を示している。

【0008】USBハブ1は、複数のホスト側接続ポート2（2−1，2−2，2−3，2−4）と、複数の周辺機器側接続ポート3（3−1，3−2，3−3，3−4）と、複数のホスト側FIFOメモリ11（11−1，11−2，11−3，11−4）と、バス12と、ハブリピータ13と、コントローラ14と、CPU15と、バス16と、複数の周辺機器側FIFOメモリ17（17−1，17−2，17−3，17−4）とを備えている。

【0009】ホスト側接続ポート2−1、2−2，2−3，2−4は、それぞれホストPC21，22，23，24をUSBハブ1に対しUSB接続するためのものである。また、周辺機器側接続ポート3−1、3−2，3−3，3−4は、それぞれ周辺機器としてのプリンタ21，スキャナ22，HDドライブ23、CD−ROMドライブ24をUSBハブ1に対しUSB接続するためのものである。ホスト側FIFOメモリ11−1，11−2，11−3，11−4は、それぞれホスト側接続ポート2−1、2−2，2−3，2−4に接続されており、それぞれホストPC21−24から周辺機器25−28側に送信されるパケットデータ、及び周辺機器25−28側からホストPC21−24側へ転送されるパケットデータを一時保持する役割を有する。

【0010】バス12は、データを伝送するための通信経路である。ハブリピータ13、ハブコントローラ14、CPU15とは、全体としてホストPC21−24と周辺機器25−28との間のデータ伝送を制御する制御回路Cとして機能する。制御回路Cは、ホストPC21−24の1つから周辺機器25−28の1つに対しデータ転送の要求があった場合、その周辺機器の使用状況をチェックし、その周辺機器が使用可能である場合に当該ホストPCと周辺機器との間の接続をセットアップし、データ転送終了後接続を解除するなどの機能を有する。接続のセットアップは、要求元のホストPCと要求先の周辺機器との間で1対1に行われるので、要求先が重複しない限り、複数のホストPCが同時に周辺機器にアクセスすることが可能となっている。

【0011】ハブリピータ13は、ホストPC21−24と周辺機器25−28との間の接続をセットアップ又は解除する機能を有する部分であり、また、ハブコントローラ14は、ホストPC21からUSBハブ1へのデータ伝送を行うためのメカニズムを提供する部分である。また、CPU15は、USB規格に基づいたパケットデータのトラフィック制御及びデータ管理を行う。バス16は、データを伝送するための通信経路である。周辺機器側FIFOメモリ17−1、17−2、17−3、17−4は、それぞれ周辺機器側接続ポート3−1，3−2，3−3，3−4に接続されており、制御回路Cから周辺機器25−28に出力されるべきパケットデータ、及び周辺機器25−28からホストPC21−24側に転送されるパケットデータを一時保持する役割を有する。

【0012】次に、本実施の形態に係るUSBハブ1の作用を、図面に基づいて説明する。以下では、ホストPC21−24から周辺機器25−28へデータを送信する場合と、逆に周辺機器25−28からホストPC21−24にデータ送信する場合とで分けて説明する。

【0013】まず、ホストPC21−24から周辺機器25−28へデータを送信する場合を、図2に示すフローチャートに基づいて説明する。この場合、最初にデータ送信を希望するホストPCが、送信を希望するパケットデータDATA 及びout-tokenパケットを出力する（S1）。ここでは、ホストPC21からプリンタ25へデータが出力されるものとする。パケットデータDATAのヘッダには、送信先のプリンタ25のアドレスが付加されている。out-tokenパケットは、ホストPCが周辺機器へデータ転送を指示する場合に出力されるコマンドパケットであり、そのヘッダには送信先の周辺機器（この場合プリンタ25）のアドレスが付加されている。

【0014】次に、S2において、このパケットデータDATA及びout-tokenパケットが、ホスト側FIFOメモリ11−1に一時記憶される。CPU14は、このパケットデータDATAに付加されたプリンタ25のアドレスデータを取得する。次に、S3において、CPU15は、取得されたアドレスデータに係る周辺機器即ちプリンタ25が使用可能か否かをチェックする。すなわち、他のホストPC22−24との間でデータを伝送している途中であるか否かをチェックする。プリンタ25が使用不可能であれば、CPU15はホストPC15にデータの送受信が正常に行われなかったときに発行されるハンドシェークパケットNAKを出力し（S4）、処理はS1に戻る。

【0015】プリンタ25が使用可能であれば、CPU15は、ハブリピータ13に命令してホストPC21とプリンタ25との間の接続をセットアップさせると共に、ハブコントローラ14に命令して、ホスト側FIFOメモリ11−1に保持されたパケットデータDATA及びout-tokenパケットを周辺機器側FIFOメモリ17−1へ向けて出力させる（S5）。

【0016】次に、CPU15は、周辺機器側FIFOメモリ17−1に保持されたout-tokenパケットをプリンタ25に向けて出力させる（S6）。プリンタ25が

このout-tokenパケットを受信しなかった場合（S7のN）には，CPU15はプリンタ25からNAK信号を受け取り、ホスト側FIFOメモリ11－1にこのNAK信号を送信し、S6に戻る（S7）。

【0017】プリンタ25がこのout-tokenパケットを受け取った場合（S7のY）、パケットデータDATAが周辺機器側FIFOメモリ17－1からプリンタ25に向けて転送される。転送が完了すると、ハンドシェークパケットACK（データの送受信が正常に行われたことを示す）がプリンタ25から周辺機器側FIFOメモリ11－1に出力される（S9）。ハンドシェークパケットACKは周辺機器側FIFOメモリ17－1に送られ、さらにホストPC21に受信され、これによりデータの送信手順が終了する（S10）。このように，あるホストPCが1つの周辺機器（例えばプリンタ25）にアクセスしている場合において、他のホストPCが当該周辺機器アクセスを要求した場合には、NAK信号の出力により先行のホストPCでの送受信が完了するまで他方のホストPCのデータはFIFOメモリ11により一時保持される。これにより、各ホストPCのデータの衝突が回避されている。

【0018】次に、周辺機器25－28からホストPC21－24にデータ送信する場合を図3に示すフローチャートに基づいて説明する。ここでは、CD－ROMドライブ25からホストPC22へデータが出力されるものとする。この場合、最初にデータ受信を希望するホストPC22が、in-tokenパケットを出力する（S11）。このin-tokenパケットは、周辺機器25－28側からホストPC21－24側へデータの転送を指示するためのコマンドパケットであり、そのヘッダには送信先の周辺機器（ここではCD－ROMドライブ28）のアドレスが付加されている。

【0019】次に、S12において、このin-tokenパケットが、ホスト側FIFOメモリ11－2に一時記憶される。CPU14は、このin-tokenパケットに付加されたCD－ROMドライブ28のアドレスデータを取得する。次に、S13において、CPU15は、取得されたアドレスデータに係る周辺機器即ちCD－ROMドライブ28が使用可能か否かをチェックする。すなわち、他のホストPC22－24との間でデータを伝送している途中であるか否かをチェックする。

【0020】CD－ROMドライブ25が使用不可能であれば（S13のN）、CPU15はホストPC22にデータの送受信が正常に行われなかったときに発行されるハンドシェークパケットNAKを出力し（S14）、処理はS11に戻る。

【0021】CD－ROMドライブ25が使用可能であれば（S13のY）、CPU15は、ハブリピータ13に命令してホストPC22とCD－ROMドライブ28との間の接続をセットアップさせると共に、ハブコントローラ14に命令して、ホスト側FIFOメモリ11－2に保持されたin-tokenパケットを周辺機器側FIFOメモリ17－4へ向けて出力させる（S15）。

【0022】次に、CPU15は、周辺機器側FIFOメモリ17－4に保持されたin-tokenパケットをCD－ROMドライブ28に向けて出力させる（S16）。CD－ROMドライブ28がこのin-tokenパケットを受信しなかった場合（S17のN）には、CPU15はCD－ROMドライブ28からNAK信号を受け取り、ホスト側FIFOメモリ11－2にこのNAK信号を送信し（S18）、S16に戻る。

【0023】CD－ROMドライブ28がこのin-tokenパケットを受け取った場合（S17のY）、CD－ROMドライブ28のデータDATA゛が、周辺機器側FIFOメモリ17－4、制御回路C及びホスト側FIFOメモリ17－2を経てホストPC22に向けて転送される（S19）。ホストPC22は、データ受信に成功したら、ハンドシェークパケットACKをCD－ROMドライブ28に向けて出力し（S20）、これによりデータの受信手順が終了する（S21）。

【0024】

【発明の効果】以上説明したように、本発明によれば、複数のホストコンピュータが周辺機器を共有することができ、かつ切替操作が不要となり、ネットワーク環境を簡単に提供することができる。

【図面の簡単な説明】

【図1】 本発明の実施の形態に係るUSBハブ1並びにこれに接続されたホストコンピュータ及び周辺機器を示す。

【図2】 図1に示すUSBハブの作用を示すフローチャートである。

【図3】 図1に示すUSBハブの作用を示すフローチャートである。

【符号の説明】

1　USBハブ
2、3　接続ポート
11、17　FIFOメモリ
12、16　バス
13　ハブリピータ
14　ハブコントローラ
15　CPU
C　制御回路
21－24　ホストPC
25　プリンタ（周辺機器）
26　スキャナ（周辺機器）
27　ハードディスクドライブ（周辺機器）
28　CD－ROMドライブ

【図1】

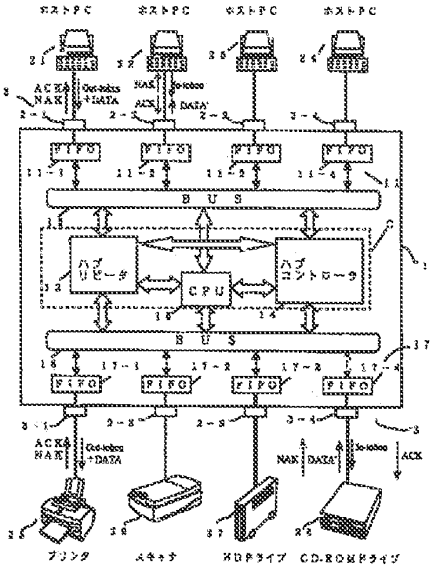
ホストPC
ACK&NAK
Out-token +DATA
NAK
In-token
ACK
DATA
FIFO
BUS
ハブリピーダ
CPU
ハブコントローラ
プリンタ
スキャナ
HDPライブ
CD-ROMPライブ

【図2】

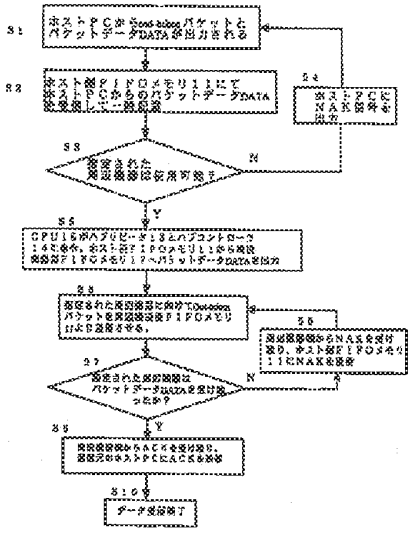
S1
S2
S3
S4
S5
S6
S7
S8
S9
S10
N
Y

【図3】

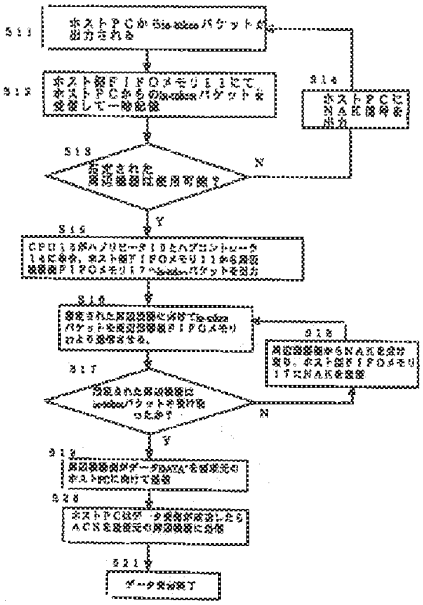
S11
S12
S13
S14
S15
S16
S17
S18
S19
S20
S21
N
Y

Espacenet

## Bibliographic data: TW470887 (B) — 2002-01-01

**USB hub having multiple upstream ports and capable of switching between different hosts and computer system using the USB hub**

**Inventor(s):** JANG LIANG-SHI [TW] ± (JANG, LIANG-SHI)

**Applicant(s):** WINBOND ELECTRONICS CORP [TW] ± (WINBOND ELECTRONICS CORP)

**Classification:** - **international:** *G06F13/36;* (IPC1-7): G06F13/36
- **cooperative:**

**Application number:** TW20000104360 20000310

**Priority number (s):** TW20000104360 20000310

Abstract of TW470887 (B)

There are provided an USB hub having multiple upstream ports and capable of switching between different hosts and a computer system using the USB hub. According to the requests of different computer hosts or the selection of manual switch, the usage right is switched to a computer host that requires using an USB hub, so that the computer host can control the data access of all the USB devices connected to the downstream port of the USB hub. The present invention can select and switch the computer host via the control of computer software, and achieve an automatic switching function. Furthermore, the software can determine whether the USB device currently in use is allowed to be switched, so as to avoid influencing its application function. Also, the function of the conventional data converter is integrated with the USB hub to effectively save the cost without having over-long cable and avoid switching noise. In addition, based on the number of the downstream ports of the USB hub, it is able to switch and use multiple USB devices.



**Microchip Ex. 1006, p. 77**
**Microchip v. Aptiv**
**IPR2024-00495**

公告本

| | |
|---|---|
| 申請日期 | 89.3.10 |
| 案號 | 89104360 |
| 類別 | G06F 13/36 |

（以上各欄由本局填註）

A4
C4

470887

# 發明 新型 專利說明書

| | | |
|---|---|---|
| 一、發明 新型 名稱 | 中文 | 具有多個上傳埠並可在不同主機間切換之 USB 集線器及使用該 USB 集線器之電腦系統 |
| | 英文 | |
| 二、發明 創作 人 | 姓名 | 張良熙 |
| | 國籍 | 中華民國 |
| | 住、居所 | 新竹市大學路 81 巷 3 弄 11-1 號 2 樓 |
| 三、申請人 | 姓名（名稱） | 華邦電子股份有限公司 |
| | 國籍 | 中華民國 |
| | 住、居所（事務所） | 新竹科學工業園區研新三路四號 |
| | 代表人姓名 | 焦佑鈞 |

裝 訂 線

經濟部中央標準局員工消費合作社印製

本紙張尺度適用中國國家標準（CNS）A4規格（210×297公釐）

公告本

| | |
|---|---|
| 申請日期 | 89.3.10 |
| 案號 | 89104360 |
| 類別 | G06F 13/36 |

（以上各欄由本局填註）

A4
C4

470887

# 發明 新型 專利說明書

| | | |
|---|---|---|
| 一、發明 新型 名稱 | 中文 | 具有多個上傳埠並可在不同主機間切換之 USB 集線器及使用該 USB 集線器之電腦系統 |
| | 英文 | |
| 二、發明 創作 人 | 姓名 | 張良熙 |
| | 國籍 | 中華民國 |
| | 住、居所 | 新竹市大學路 81 巷 3 弄 11-1 號 2 樓 |
| 三、申請人 | 姓名（名稱） | 華邦電子股份有限公司 |
| | 國籍 | 中華民國 |
| | 住、居所（事務所） | 新竹科學工業園區研新三路四號 |
| | 代表人姓名 | 焦佑鈞 |

裝 訂 線

經濟部中央標準局員工消費合作社印製

本紙張尺度適用中國國家標準（CNS）A4規格（210×297公釐）

五、發明說明（ / ）

本發明是有關於一種 USB 集線器，且特別是有關於一種具有多個上傳埠並可在不同主機間切換之 USB 集線器及使用該 USB 集線器之電腦系統，其可依據不同電腦主機之要求與手動切換之選擇，在適當時機將其使用權切換給需使用 USB 集線器之電腦主機，使電腦主機可控制所有接在 USB 集線器之下傳埠的 USB 裝置資料存取。

自從 IBM 公司發展出 PC XT 及 PC AT 的個人電腦之後，和 IBM PC 相容的個人電腦即被全世界普遍使用。在這期間，因爲半導體技術的進步，使個人電腦的功能越來越強，同時可用的設備也越來越多，例如：圖形化的作業系統的普及，滑鼠(Mouse)已是必備的設備，爲了將資料印出，印表機幾乎也是必備的，網際網路(Internet)的發達，在家中的使用者都需使用數據機(MODEM)來連接網路，而爲了避免電腦當機使工作成果付諸流水，會準備大容量的備份裝置定時備資料，或是想將圖形存入電腦，掃描器(Scanner)亦是普遍被使用的設備。

以上所提及的設備在個人電腦發展出來之後，陸續發展出來，直到目前，已是非常普遍，甚至是必備的設備。但是因爲每一項設備發展的目的不同，所處的環境亦不同，所以在設計時，依不同的考量而使用不同的介面。到了現在，在一部個人電腦若要使用前面所提的各項設備，電腦後面的連線將是非常可觀的，因爲幾乎每種設備都使用不同的介面，有些介面目前已是個人電腦的標準配備，如連接滑鼠的 RS232 串列介面，或是連接印表機的並列介



（請先閱讀背面之注意事項再填寫本頁）

訂

經濟部智慧財產局員工消費合作社印製

本紙張尺度適用中國國家標準（CNS）A4規格（210×297公釐）

Microchip Ex. 1006, p. 80
Microchip v. Aptiv
IPR2024-00495

五、發明說明（2）

面。但是有些介面則需另外安裝介面卡，例如連接大容量備份裝置大都使用 SCSI(Small Computer System Interface)介面，SCSI 介面即需另外安裝介面卡。又，有些設備更是使用專有的介面，如有些掃描器即是使用特殊的專有介面，必需安裝專屬的介面卡才可使用。因此在個人電腦中，必需提供許多插槽(Slot)以供安裝各種介面卡，而完成整個系統的連線之後，電腦後面的連線亦是十分可觀，並且凌亂無比。

由於上述的情況，乃發展出通用串列匯流排(Universal Serial Bus；以下簡稱 USB)介面的規格，其係爲一新興起之傳輸協定，USB 意圖將週邊至主機系統之傳輸方式統一化，使得未來週邊與主機之連結方式都透過 USB，以方便使用者連結各週邊與主機系統。

USB 希望各種設備都可使用統一的介面來連接，可簡化系統的安裝，並且電腦內部亦不需要預留太多的空間來安裝各種特殊的介面卡，另外 USB 介面亦有隨插即用(Plug & Play)的功能，即個人電腦可以自動偵測所連接的設備，並安裝相關的驅動程式(Driver)供使用者使用。此外，USB 介面的規格，具有線上即插即用(Hot Plug-in)的功能，可以在電腦運作當中，將設備連接上去，電腦主機皆可以自動偵測並安裝相關的程式，無需經過關機再重新開機的步驟，隨即可讓使用者使用新連上的週邊設備。同樣地，在週邊設備移除時，電腦主機亦可自動偵測並將相關的程式移除，以免使用者執行相關程式而產生錯誤。



（請先閱讀背面之注意事項再填寫本頁）

裝

訂

線

經濟部智慧財產局員工消費合作社印製

本紙張尺度適用中國國家標準（CNS）A4規格（210×297公釐）

Microchip Ex. 1006, p. 81
Microchip v. Aptiv
IPR2024-00495

五、發明說明（3）

一般來說，一個 USB 系統只能有一個主控器(master)，其他所有週邊裝置都是附屬器(slave)，通常個人電腦(PC)中之 USB 主機控制器(Host Controller)是唯一的主控器，並掌控所有資料之傳輸。主機控制器使用表徵(tokens)及指令(commands)，USB 定義爲 Requests 來控制主控器(PC)與附屬器(週邊裝置)間資料之接收與傳送。

USB 集線器(Hub)界於 USB 主機控制器與週邊裝置(USB 裝置)之間爲星形拓撲(star topology)中，用以擴展週邊之關鍵組件，所有的 USB 裝置(device)或節點(node)例如鍵盤、滑鼠、印表機...等都必須接在集線器之下傳埠(downstream port)或是被整合在集線器中。通常集線器擁有一上傳埠(upstream port)接至上一層集線器或主機控制器之根部節點集線器(root Hub)，另有一個以上(含一個)之下傳埠用以擴充 USB 之裝置節點。

集線器提供兩個主要的功能，一是中繼器(Repeater)：用以將主機下傳的資料廣播(broadcast)至所有致能埠上之 USB 裝置，然後將 USB 裝置上傳的資料重覆於上傳埠送至主機；另一是連接(connection)與斷絕(disconnection)之偵測：集線器必須對 USB 裝置之熱拔插做偵測，並報告給主機以達到主機熱即插即用(Hot Plug & Play)之功能。

請參照第 1 圖與第 2 圖，其分別繪示的是習知一種電腦系統的連接示意圖。

如第 1 圖與第 2 圖所示，所有的 USB 裝置 14a~14n 分別連接在對應之集線器 12a~12f 的下傳埠 16a~16n 或是被整



（請先閱讀背面之注意事項再填寫本頁）
裝
訂
線
經濟部智慧財產局員工消費合作社印製
本紙張尺度適用中國國家標準（CNS）A4規格（210×297公釐）

Microchip Ex. 1006, p. 82
Microchip v. Aptiv
IPR2024-00495

五、發明說明（4）

合在集線器(如第 2 圖之組合元件 20)中。集線器 12a~12f 分別擁有一上傳埠 18a~18f，並分別連接至上一層集線器或 USB 主機控制器 10 或電腦主機之根部節點集線器(root Hub)11。

由第 1 圖與第 2 圖可得知，由於個人電腦中之 USB 主機控制器控制所有 USB 裝置與個人電腦間資料之傳輸，所以對任一 USB 裝置而言，其只能被唯一之個人電腦使用，當有另一個人電腦欲透過 USB 匯流排使用此 USB 裝置時，必須重新將此 USB 裝置插入另一個人電腦之根部節點集線器或外部集線器之下傳埠，由此個人電腦取得 USB 裝置之控制權方能使用。

為了解決上述問題，目前市面上的解決方法為提供一轉換盒(switch box)，以手動方式來切換 USB 裝置接上被選擇之個人電腦，此種解決方案之電腦系統的連接示意圖如第 3 圖所示，包括個人電腦 21 與 22、轉換盒 24 及 USB 裝置 26。舉例來說，USB 裝置 26 目前是被個人電腦 21 所使用，假如個人電腦 22 欲使用 USB 裝置 26 時，必須以手動方式切換轉換盒 24 上之開關，使 USB 裝置 26 透過轉換盒 24 連接至個人電腦 22，此時個人電腦 22 即可使用 USB 裝置 26。然而，依照第 3 圖所示之架構及其切換方法，具有以下的缺點：

1. 人為切換不方便。

2. 無法判斷切換之適當時機，有可能影響正在使用此 USB 裝置之應用軟體功能。



（請先閱讀背面之注意事項再填寫本頁）
裝
訂
線
經濟部智慧財產局員工消費合作社印製
本紙張尺度適用中國國家標準（CNS）A4規格（210×297公釐）

五、發明說明（5）

3. 必須使用額外的轉換盒，成本高。

4. 延長電纜(cable)與使用過多的插座插頭，易產生雜訊。

5. 違反 USB 規格，有可能使 USB 裝置至集線器之電纜路徑超過 5 公尺。

6. 只能切換使用單一 USB 裝置。

請參照第 4 圖，其繪示的習知一種電腦系統的連接示意圖，包括個人電腦 31 與 32、資料轉換器(data switcher)34 及 USB 裝置 36a~36c。

第 4 圖與第 3 圖之最大不同點在於，透過第 4 圖之資料轉換器 34，可一次將連接於資料轉換器 34 上之多台 USB 裝置 36a~36c 切換給單一個人電腦使用。然而，必須注意的是，當資料轉換器 34 只連接這三台 USB 裝置 36a~36c 時，個人電腦 31 與 32 就分別必須使用三條 USB 電纜 37a~37c 與 38a~38c 來連接至資料轉換器 34。假如連接資料轉換器 34 之 USB 裝置的數量很多時，此時個人電腦 31、32 與資料轉換器 34 間之 USB 電纜的使用數量勢必非常可觀。

有鑒於此，本發明提出一種具有多個上傳埠並可在不同主機間切換之USB集線器，包括多數個上傳埠、多數個下傳埠、連結佈線器、轉換控制器與傳統USB集線器。這些上傳埠分別用以提供實際之連結至不同之電腦主機中，而所有下傳埠分別用以提供實際之連結至不同之USB裝置中。連結佈線器連接至所有上傳埠其中含有指令解譯器(74)



（請先閱讀背面之注意事項再填寫本頁）

裝

訂

線

經濟部智慧財產局員工消費合作社印製

本紙張尺度適用中國國家標準（CNS）A4規格（210×297公釐）

Microchip Ex. 1006, p. 84
Microchip v. Aptiv
IPR2024-00495

五、發明說明（6）

和多工器(72)，指令解譯器用以解碼來自個別電腦主機送來的指令，並回應相關的資料給電腦主機，同時送出解析後之結果訊號給轉換控制器(52)。轉換控制器(52)依據此控制訊號切換多工器(72)使其選擇指令所指定之上傳埠連接至USB集線器(54)之集線器中繼器(60)，其中被切換連接至集線器中繼器(60)之上傳埠係爲集線器埠，其他未連接者則爲裝置埠，而集線器埠所接之電腦主機擁有USB集線器之控制權，並控制所有接在USB集線器之下傳埠的USB裝置資料存取。轉換控制器連接所有上傳埠與連結佈線器，用以依據指令解析之結果訊號與手動開關來切換多工器，轉換控制器並於多工器切換完成後，送一開關控制訊號至所有上傳埠(46a~46n)，此控制訊號使上傳埠之電阻(64)先開路(open)再閉路(close)，而造成先斷絕再連接之機制，使連接上傳埠之主機分別對新的集線器埠和其他裝置埠重新認定，其中只有接在集線器埠的主機認定其下接有集線器並可使用此集線器下之裝置，其他接在裝置埠之主機認定其下接一單純之USB裝置用以傳送要求使用集線器之指令至連結佈線器(50)。

此外，本發明提出一種電腦系統，包括多數台電腦主機、多數台 USB 裝置與一 USB 集線器。上述 USB 集線器具有數個上傳埠與數個下傳埠，各上傳埠分別連接至各電腦主機中，以及各下傳埠分別連接至各 USB 裝置中，且 USB 集線器用以上傳由各 USB 裝置送來的資料及下傳由各電腦主機送來的資料。其中，在正常操作下，僅有一台電



（請先閱讀背面之注意事項再填寫本頁）
裝
訂
線
經濟部智慧財產局員工消費合作社印製
本紙張尺度適用中國國家標準（CNS）A4規格（210×297公釐）

Microchip Ex. 1006, p. 85
Microchip v. Aptiv
IPR2024-00495

五、發明說明（7）

腦主機具有 USB 集線器之使用權，代表此電腦主機可控制所有接在 USB 集線器之下傳埠的 USB 裝置資料存取。當有另一台電腦主機送出集線器要求指令給 USB 集線器，要求使用 USB 集線器及控制 USB 集線器下接之 USB 裝置時，USB 集線器會進入集線器仲裁狀態，並在適當時機後將其使用權轉交給此另一台電腦主機，此時該另一台電腦主機即具有 USB 集線器之使用權，並可控制所有接在 USB 集線器之下傳埠的 USB 裝置資料存取，達到不同電腦主機切換使用 USB 集線器之目的。另，USB 集線器可具有手動切換開關，經由控制此手動切換開關也可達到不同電腦主機切換使用 USB 集線器之目的。

本發明提出之 USB 集線器，由於具有多個上傳埠且本身具有切換與仲裁功能，故可依據不同電腦主機之要求與手動切換之選擇，在適當時機將其使用權切換給需使用 USB 集線器之電腦主機，使電腦主機可控制所有接在 USB 集線器之下傳埠的 USB 裝置資料存取，換言之，本發明依據 USB 集線器之下傳埠的數量多寡，可一次切換使用多個 USB 裝置。因此，本發明可經由電腦軟體控制選擇切換之電腦主機，並可達到自動切換的功能，且軟體可判斷目前正被使用之 USB 裝置是否允許切換，避免影響其應用功能。同時，將傳統資料轉換器之功能與 USB 集線器整合，可有效節省成本，並且無電纜過長之憂慮，可避免切換造成的雜訊。

爲讓本發明之上述和其他目的、特徵、和優點能更明



（請先閱讀背面之注意事項再填寫本頁）

訂

經濟部智慧財產局員工消費合作社印製

本紙張尺度適用中國國家標準（CNS）A4規格（210×297公釐）

Microchip Ex. 1006, p. 86
Microchip v. Aptiv
IPR2024-00495

五、發明說明（8）

顯易懂，下文特舉較佳實施例，並配合所附圖式，作詳細說明如下：

圖式之簡單說明：

第 1 圖繪示的是習知一種電腦系統的連接示意圖；

第 2 圖繪示的是習知另一種電腦系統的連接示意圖；

第 3 圖繪示的是習知再一種電腦系統的連接示意圖；

第 4 圖繪示的是習知又一種電腦系統的連接示意圖；

第 5 圖繪示的是依照本發明一較佳實施例的一種使用具有多個上傳埠之 USB 集線器，並可在不同電腦主機間切換之電腦系統的連接示意圖；

第 6 圖繪示的是依照第 5 圖之具有多上傳埠之 USB 集線器 44 的詳細結構圖；

第 7 圖繪示的是依照第 6 圖之傳統 USB 集線器 54 的詳細結構圖；

第 8 圖繪示的是依照第 6 圖之 USB 集線器 44 之每一上傳埠的詳細結構圖；

第 9 圖繪示的是依照第 6 圖之 USB 集線器 44 之連結佈線器的詳細結構圖；以及

第 10 圖繪示的是依照第 6 圖之 USB 集線器 44 之轉換控制器的詳細結構圖。

圖式之標號說明：

10、50a~50n：USB 主機控制器

11：根部節點集線器

12a~12f：集線器



（請先閱讀背面之注意事項再填寫本頁）

訂

經濟部智慧財產局員工消費合作社印製

本紙張尺度適用中國國家標準（CNS）A4規格（210×297公釐）

五、發明說明（9）

14a~14n、26、36a~36c、42a~42n：USB 裝置

16a~16n：下傳埠

18a~18f：上傳埠

20：組合元件

21、22、31、32、40a~40n：個人電腦

24：轉換盒

34：資料轉換器

37a~37c、38a~38c：USB 電纜

44：本發明之具有多上傳埠之 USB 集線器

46a~46n：上傳埠

48a~48n：下傳埠

50：連結佈線器

52：轉換控制器

54：傳統 USB 集線器

60：集線器中繼器

62：集線器控制器

64：電阻

66：USB 收發器

68：USB 訊號端 DP

70：USB 訊號端 DM

72：多工器

74：指令解譯器

76：組合邏輯控制器

<u>實施例</u>



（請先閱讀背面之注意事項再填寫本頁）

裝

訂

線

經濟部智慧財產局員工消費合作社印製

本紙張尺度適用中國國家標準（CNS）A4規格（210×297公釐）

五、發明說明（10）

為了有效解決多台個人電腦切換使用多個 USB 裝置所面臨的問題，並且由於所有的 USB 裝置都必須經由集線器再往上接至使用此 USB 裝置之個人電腦(PC)，因此本發明乃利用此一特性，提供一個含有多個上傳埠之集線器，並透過內建於此集線器中之轉換控制器與個別 PC 中之控制軟體來選擇切換何者使用集線器，並控制和使用接上此集線器之 USB 裝置，其相關描述將於下詳細討論。

請參照第 5 圖，其繪示的是依照本發明一較佳實施例的一種使用具有多個上傳埠之 USB 集線器，並可在不同電腦主機間切換之電腦系統的連接示意圖。

本發明之電腦系統的組成要件主要包括多數台個人電腦 40a~40n、多數個 USB 裝置 42a~42n 與一具有多上傳埠之 USB 集線器 44，其中任一 USB 裝置 42a~42n 可以是鍵盤、滑鼠、印表機...等週邊裝置。USB 集線器 44 具有多數個上傳埠 46a~46n 與多數個下傳埠 48a~48n。每一個人電腦 40a~40n 分別透過其內部之 USB 主機控制器 50a~50n 連接至 USB 集線器 44 之一上傳埠 46a~46n，以及每一 USB 裝置 42a~42n 分別連接至 USB 集線器 44 之一下傳埠 48a~48n，如第 5 圖所示。

請參照第 6 圖，其繪示的是依照第 5 圖之具有多上傳埠之 USB 集線器 44 的詳細結構圖。

如先前所述，USB 集線器 44 具有多數個上傳埠 46a~46n 與多數個下傳埠 48a~48n，其中上傳埠 46a~46n 可被轉換控制器 52 控制其斷絕/連接之時序，USB 集線器 44



（請先閱讀背面之注意事項再填寫本頁）

訂

經濟部智慧財產局員工消費合作社印製

本紙張尺度適用中國國家標準（CNS）A4規格（210×297公釐）

五、發明說明(11)

係由一連結佈線器(link router)50、一轉換控制器 52 與一傳統 USB 集線器 54 所組成。連結佈線器 50 連接 USB 集線器 44 之上傳埠 46a~46n、轉換控制器 52 與傳統 USB 集線器 54。轉換控制器 52 控制上傳埠 46a~46n 之斷絕、連接時序，且其可經由外部之手動切換來改變其控制狀態。

請參照第 7 圖，其繪示的是依照第 6 圖之傳統 USB 集線器 54 的詳細結構圖。

USB 集線器 54 係由一集線器中繼器 60 與一集線器控制器 62 所組成，且兩者相互連接。集線器中繼器 60 之功能爲上傳由下傳埠 48a~48n 送來的資料，以及下傳由連結佈線器 50(第 6 圖)送來之表徵、指令及資料。集線器控制器 62 提供 USB 集線器 54 之狀態給電腦主機(例如第 5 圖之個人電腦 40a)，電腦主機依據 USB 集線器 54 之不同狀態控制下傳埠 48a~48n。

請參照第 8 圖，其繪示的是依照第 6 圖之 USB 集線器 44 之每一上傳埠 46a~46n 的詳細結構圖。

在第 8 圖中，以上傳埠 46a 爲例來說明。USB 集線器 44 之上傳埠 46a 包括一電阻 64、一 USB 收發器 66、訊號端 DP 68 與訊號端 DM 70。電阻 64 之兩端分別耦接至一電壓源 VDD 與訊號端 DP 68，且電阻 64 接收來自轉換控制器 52 之一 ON/OFF 控制信號，並依據此 ON/OFF 控制信號來決定上傳埠 46a 之連接狀態，其中 ON 代表連接(connection)而 OFF 代表斷絕(disconnection)，以及電阻 64 之阻值例如是 1.5K 歐姆(Ω)，電壓源 VDD 之電壓值例如是 3.3 伏特



（請先閱讀背面之注意事項再填寫本頁）
裝
訂
線
經濟部智慧財產局員工消費合作社印製
本紙張尺度適用中國國家標準（CNS）A4規格（210×297公釐）

Microchip Ex. 1006, p. 90
Microchip v. Aptiv
IPR2024-00495

五、發明說明（12）

(V)。USB 收發器 66 之一端連接至連結佈線器 50，另一端連接至訊號端 DP 68 與訊號端 DM 70，用以接收來自連結佈線器 50(或訊號端 68、70)的資料訊息，並將此資料訊息傳送至連接端 68、70(或連結佈線器 50)。

換言之，USB 集線器 44 之每一上傳埠 46a~46n 用以提供實際之連結至不同個人電腦 40a~40n 之 USB 主機控制器 50a~50n，且每一上傳埠 46a~46n 內含有一連接/斷絕之機制，由轉換控制器 52 控制不同上傳埠 46a~46n 之連接或斷絕。而 USB 集線器 44 之每一下傳埠 48a~48n 則用以提供實際之連結至 USB 裝置 42a~42n，且每一下傳埠 42a~42n 內含有一裝置附加/分離(attach/detach)偵測線路(未繪示出)，如熟習者所知，用以判斷下傳埠 48a~48n 之狀態並通知主機控制器作爲埠狀態之更新。

請參照第 9 圖，其繪示的是依照第 6 圖之本發明 USB 集線器 44 之連結佈線器 50 的詳細結構圖。

連結佈線器 50 包括一多工器(MUX)72 與一指令解譯器(Command Parser)74。多工器 72 連結於上傳埠 46a~46n 與傳統 USB 集線器 54 間，此 N 選一之多工器 72 由轉換控制器 52 之輸出控制，被選擇到之上傳埠 46a~46n 稱爲集線器埠(Hub port)，其他則稱爲裝置埠(Device port)。集線器埠所接之 USB 主機控制器擁有 USB 集線器 44 之控制權，並控制所有接在此 USB 集線器 44 之下傳埠 48a~48n 的 USB 裝置 42a~42n 資料存取。指令解譯器 74 用以解碼裝置埠和集線器埠從各個人電腦 40a~40n 之主機控制器 50a~50n 送來



（請先閱讀背面之注意事項再填寫本頁）

裝

訂

線

經濟部智慧財產局員工消費合作社印製

本紙張尺度適用中國國家標準（CNS）A4規格（210×297公釐）

五、發明說明(13)

的指令，並回應相關的資料給主機控制器 50a~50n，同時，指令解譯器 74 會將解析之結果送至轉換控制器 52 作爲控制之部分依據。

請參照第 10 圖，其繪示的是依照第 6 圖之本發明 USB 集線器 44 之轉換控制器 52 的詳細結構圖。

轉換控制器 52 經由其內部之組合邏輯控制器 76 接收指令解譯器 74 之結果加上手動切換之選擇，產生控制多工器 72 之訊號來決定何者是集線器埠，同時輸出控制信號至上傳埠 46a~46n，並在集線器埠、裝置埠切換時，對相關之埠做斷絕/連接之控制。

本發明之實施方法將詳細描述於下，並請同時配合參照第 5 圖至第 10 圖。

在完成電源開啓(power on)或重設(reset)之起始化(Initialization)動作之後，所有的上傳埠 46a~46n 爲連接狀態。之後，轉換控制器 52 依據手動切換之設定(亦即選擇第 10 圖之 S0~SN 其中之一)，控制連結佈線器 50 中之多工器 72 選擇上傳埠 46a~46n 其中之一爲集線器埠(例如上傳埠 46a)，此集線器埠 46a 連結之 USB 主機控制器 50a 控制經由多工器 72 連結之 USB 集線器 54，此時 USB 主機控制器 50a 所屬之個人電腦 40a 具有 USB 集線器 54 之使用權，並控制 USB 集線器 54 所連接 USB 裝置 48a~48n 資料之傳輸。此外，手動切換爲可選擇的(optional)，當無手動切換時，轉換控制器 52 可預設某一上傳埠(例如上傳埠 46a)爲集線器埠，欲使用 USB 集線器 44 之個人電腦必須連接至此手



(請先閱讀背面之注意事項再填寫本頁)

裝

訂

線

經濟部智慧財產局員工消費合作社印製

本紙張尺度適用中國國家標準(CNS)A4規格(210×297公釐)

五、發明說明 (14)

動切換設定或預設之上傳埠。

當接至集線器埠之 USB 主機控制器使用 USB 集線器 44 時，指令解譯器 74 接收經裝置埠送來之指令並回應相關之訊息給此裝置埠上接之 USB 主機控制器，使 USB 主機控制器視指令解譯器 74 爲單一之 USB 裝置，並可分辨個別個人電腦送來的指令。若其中之一個人電腦(例如個人電腦 40n)欲使用 USB 集線器 44 及控制 USB 集線器 44 下接之 USB 裝置 48a~48n 時，其 USB 主機控制器 50n 送出一特別之指令(集線器要求指令 HRQ)給指令解譯器 74，指令解譯器 74 解析個人電腦 40n 送來之集線器要求指令後進入集線器仲裁狀態(HARB)，並回應此狀態給所有的 USB 主機控制器 50a~50n。接著，個人電腦 40a 判斷切換 USB 集線器 44 之適當時機後，送出另一特別之指令(集線器確認指令 HACK)給指令解譯器 74，指令解譯器 74 將指令及狀態轉換成控制信號(HRQ/HACK/HARB)給轉換控制器 52 控制 USB 集線器 44 之切換。

當個人電腦 40n 產生之 HRQ 指令啓動(active)後，且個人電腦 40a 產生之 HACK 指令啓動時，轉換控制器 52 對上傳埠 46a 與 46n 做斷絕動作後，控制多工器 72 切換至上傳埠 46n，最後再將上傳埠 46a 與 46n 做連接動作。經過多工器 72 切換後重新連接 USB 主機控制器 50a、50n 之上傳埠 46a 與 46n，達到集線器埠與裝置埠互換之目的。同時，個人電腦 40n 上之 USB 主機控制器 50n 取得 USB 集線器 44 之所有權，並控制 USB 集線器 44 下接之 USB 裝置



(請先閱讀背面之注意事項再填寫本頁)
裝
訂
線
經濟部智慧財產局員工消費合作社印製
本紙張尺度適用中國國家標準(CNS)A4規格(210×297公釐)

Microchip Ex. 1006, p. 93
Microchip v. Aptiv
IPR2024-00495

五、發明說明(15)

48a~48n，達成不同個人電腦(40a、40n)切換使用 USB 集線器 44 之目的。

對於 USB 主機控制器之實施步驟如下所述。USB 主機控制器先判斷本身是否已控制 USB 集線器 44，若是，則當另一 USB 主機控制器要求使用 USB 集線器 44 時，會使轉換控制器 52 進入仲裁狀態，並通知個人電腦。此時，個人電腦決定是否可被切換，若是允許被切換的話，則送出集線器確認指令 HACK 通知轉換控制器 52 做切換。反之，若不允許被切換的話，則先將 USB 集線器 44 下接之 USB 裝置 48a~48n 之驅動程式(driver)卸載(unload)，或對相關之應用軟體做必要之處理。

若此一 USB 主機控制器目前不控制 USB 集線器 44，可於應用軟體的控制下決定是否提出 USB 集線器 44 之要求，而提出之條件、時間可依使用者設定配合轉換控制器 52 達到自動切換的功能。另，在送出集線器要求指令 HRQ 之前，需先判斷轉換控制器 52 是否正處於仲裁狀態，以避免要求信號被錯失(miss)。

對於轉換控制器 52 之實施步驟如下所述。轉換控制器 52 內有一計時器(未繪示出)，用以計時在手動切換指定或預設之上傳埠上，是否接上 USB 主機控制器，若無，則該上傳埠無法於計時超過一段時間(Timeout)內收到指令，表示上傳埠未接到任何 USB 主機控制器或 USB 主機控制器接在非指定之埠上。轉換控制器 52 即進行所有上傳埠 46a~46n 反覆搜尋之動作，若 USB 主機控制器接在另一上



（請先閱讀背面之注意事項再填寫本頁）

訂

經濟部智慧財產局員工消費合作社印製

本紙張尺度適用中國國家標準（CNS）A4規格（210×297公釐）

Microchip Ex. 1006, p. 94
Microchip v. Aptiv
IPR2024-00495

五、發明說明（16）

傳埠或者中途才被接上，則搜尋動作能正確將其設定爲集線器埠(46a)，並使用 USB 集線器 44。在集線器埠使用 USB 集線器 44 時，其他裝置埠(46n)可經由軟體控制自動或由使用者指定由 USB 主機控制器 50n 送出集線器要求指令 HRQ，經由轉換控制器 52、USB 主機控制器 50a 與 50n 之互動而切換 USB 集線器 44 之使用權。

上述轉換控制器 52 實行的方法，可以是微控制器或硬體結合控制邏輯，以及指令解譯器 74 實行的方法，可以是微控制器或硬體狀態機制。

綜上所述，本發明具有以下的優點：

1. 經由軟體控制選擇切換之個人電腦，並可達到自動切換的功能。

2. 軟體可判斷目前正被使用之 USB 裝置是否允許切換，避免影響其應用功能。

3. 將傳統資料轉換器之功能與 USB 集線器整合，可有效節省成本。

4. 無電纜過長之憂慮，並可避免切換造成的雜訊。

5. 依據集線器下傳埠的數量多寡，可一次切換多個 USB 裝置。

雖然本發明已以較佳實施例揭露如上，然其並非用以限定本發明，任何熟習此技藝者，在不脫離本發明之精神和範圍內，當可作各種之更動與潤飾，因此本發明之保護範圍當視後附之申請專利範圍所界定者爲準。

（請先閱讀背面之注意事項再填寫本頁）

裝

訂

線

經濟部智慧財產局員工消費合作社印製



本紙張尺度適用中國國家標準（CNS）A4規格（210×297公釐）

Microchip Ex. 1006, p. 95
Microchip v. Aptiv
IPR2024-00495

A5
B5

四、中文發明摘要（發明之名稱：具有多個上傳埠並可在不同主機間切換之USB集線器及使用該USB集線器之電腦系統）

一種具有多個上傳埠並可在不同主機間切換之 USB 集線器及使用該 USB 集線器之電腦系統，可依據不同電腦主機之要求或手動切換之選擇，在適當時機將其使用權切換給需使用 USB 集線器之電腦主機，使電腦主機可控制所有接在 USB 集線器之下傳埠的 USB 裝置資料存取。本發明可經由電腦軟體控制選擇切換之電腦主機，並可達到自動切換的功能，且軟體可判斷目前正被使用之 USB 裝置是否允許切換，避免影響其應用功能。同時將傳統資料轉換器之功能與 USB 集線器整合，可有效節省成本，並且無電纜過長之憂慮，可避免切換造成的雜訊。並可依據 USB 集線器之下傳埠的數量多寡，一次切換使用多個 USB 裝置。

英文發明摘要（發明之名稱：　　）

（請先閱讀背面之注意事項再填寫本頁各欄）

裝

訂

線

經濟部中央標準局員工消費合作社印製



本紙張尺度適用中國國家標準（CNS）A4規格（210×297公釐）

Microchip Ex. 1006, p. 96
Microchip v. Aptiv
IPR2024-00495

六、申請專利範圍

1.一種具有多個上傳埠並可在不同主機間切換之 USB 集線器，包括：

複數個上傳埠，該些上傳埠可分別被控制其斷絕/連接之時序，且各該上傳埠分別用以提供實際之連結至一不同之電腦主機中；

複數個下傳埠，各該下傳埠分別用以提供實際之連結至一不同之 USB 裝置中；

一連結佈線器，連接該些上傳埠，該連結佈線器用以解碼來自各該電腦主機送來的指令，並回應相關的資料給各該電腦主機，同時送出解析後之一結果訊號，且該連結佈線器接收一控制訊號，並依據該控制訊號切換該連結佈線器之一多工器指向該些上傳埠其中之一；

一轉換控制器，連接該些上傳埠與該連結佈線器，用以依據該結果訊號與/或一手動切換，產生該控制訊號來控制各該上傳埠之斷絕/連接狀態；以及

一傳統 USB 集線器，用以上傳由該些下傳埠送來的資料及下傳經由該連結佈線器送來的集線器埠資料，並提供其本身之狀態給連接該集線器埠之電腦主機，使該電腦主機依據該傳統 USB 集線器之不同狀態控制該些下傳埠。

2.如申請專利範圍第 1 項所述之具有多個上傳埠並可在不同主機間切換之 USB 集線器，其中各該上傳埠包括：

一電阻，該電阻之兩端分別耦接至一電壓源與一訊號端 DP，且該電阻接收來自該轉換控制器之該控制信號，並依據該控制信號來決定各該上傳埠之斷絕/連接狀態；以及



（請先閱讀背面之注意事項再填寫本頁）
裝
訂
線
經濟部中央標準局員工消費合作社印製
本紙張尺度適用中國國家標準（CNS）A4規格（210×297公釐）

Microchip Ex. 1006, p. 97
Microchip v. Aptiv
IPR2024-00495

六、申請專利範圍

一 USB 收發器，該 USB 收發器之一端連接至該連結佈線器，其另一端連接至該訊號端 DP 與一訊號端 DM，用以與連接該上傳埠之電腦主機間上傳或下傳資料。

3.如申請專利範圍第 2 項所述之具有多個上傳埠並可在不同主機間切換之 USB 集線器，其中該電阻之阻值包括 1.5K 歐姆或其他合乎 USB 規格之阻值。

4.如申請專利範圍第 2 項所述之具有多個上傳埠並可在不同主機間切換之 USB 集線器，其中該電壓源之電壓值包括 3.3 伏特或其他合乎 USB 規格之電壓值。

5.如申請專利範圍第1項所述之具有多個上傳埠並可在不同主機間切換之USB集線器，其中該連結佈線器包括：

一多工器，連結於該些上傳埠與該傳統 USB 集線器間，該多工器係由該轉換控制器之輸出控制，指向其中一上傳埠與傳統 USB 集線器相連接，被選擇到之該上傳埠稱爲集線器埠，其他則稱爲裝置埠；以及

一指令解譯器，用以解碼該些上傳埠從各該電腦主機送來的指令，並回應相關的資料給各該電腦主機，同時將解析之結果送至該轉換控制器中作爲控制之部分依據。

6.如申請專利範圍第 5 項所述之具有多個上傳埠並可在不同主機間切換之 USB 集線器，其中該指令解譯器包括微控制器或其他可解譯指令之機制。

7.如申請專利範圍第 1 項所述之具有多個上傳埠並可在不同主機間切換之 USB 集線器，其中該轉換控制器包括



（請先閱讀背面之注意事項再填寫本頁）
裝
訂
線
經濟部中央標準局員工消費合作社印製
本紙張尺度適用中國國家標準（CNS）A4規格（210×297公釐）

六、申請專利範圍

一組合邏輯控制器，用以經由該組合邏輯控制器接收來自該連結佈線器之該結果訊號或/與該手動切換之選擇，產生該控制訊號來決定哪一該上傳埠是集線器埠，同時輸出該控制信號至該些上傳埠，並在集線器埠與裝置埠切換時，對相關之埠做斷絕/連接之控制。

8.如申請專利範圍第 1 項所述之具有多個上傳埠並可在不同主機間切換之 USB 集線器，其中該傳統 USB 集線器包括：

一集線器中繼器，用以上傳由該些下傳埠送來的資料及下傳由該連結佈線器送來的資料；以及

一集線器控制器，連接該集線器中繼器，該集線器控制器用以提供該傳統 USB 集線器之狀態給該些電腦主機，使該些電腦主機依據該傳統 USB 集線器之不同狀態控制該些下傳埠。

9.如申請專利範圍第1項所述之具有多個上傳埠並可在不同主機間切換之USB集線器，其中各該上傳埠內含有一連接/斷絕之機制，由該轉換控制器控制不同之各該上傳埠的連接與斷絕。

10.如申請專利範圍第1項所述之具有多個上傳埠並可在不同主機間切換之USB集線器，其中各該下傳埠內含有一裝置附加/分離偵測線路，用以判斷各該下傳埠之狀態並通知該些電腦主機作爲埠狀態之更新。

11.如申請專利範圍第1項所述之具有多個上傳埠並可在不同主機間切換之USB集線器，其中各該電腦主機分別



（請先閱讀背面之注意事項再填寫本頁）
裝
訂
經濟部中央標準局員工消費合作社印製
本紙張尺度適用中國國家標準（CNS）A4規格（210×297公釐）

Microchip Ex. 1006, p. 99
Microchip v. Aptiv
IPR2024-00495

六、申請專利範圍

具有一USB主機控制器，連接至各該上傳埠中，以透過該USB主機控制器控制該USB集線器。

12.如申請專利範圍第 1 項所述之具有多個上傳埠並可在不同主機間切換之 USB 集線器，其中該電腦主機包括個人電腦與可控制 USB 傳輸協定之任何平台。

13.如申請專利範圍第 1 項所述之具有多個上傳埠並可在不同主機間切換之 USB 集線器，其中各該 USB 裝置包括鍵盤、滑鼠、印表機等週邊裝置其中之一。

14.如申請專利範圍第 1 項所述之具有多個上傳埠並可在不同主機間切換之 USB 集線器，其中該轉換控制器包括微控制器與其他可產生該控制訊號之邏輯。

15.如申請專利範圍第 1 項所述之具有多個上傳埠並可在不同主機間切換之 USB 集線器，其中當該連結佈線器依據該控制訊號切換該多工器指向該些上傳埠其中之一時，被切換連接之該上傳埠係爲集線器埠，其他未連接者則爲裝置埠，而該集線器埠所接之該電腦主機擁有該 USB 集線器之控制權，並控制所有接在該 USB 集線器之該些下傳埠的該些 USB 裝置資料存取。

16.一種電腦系統，包括：

複數台電腦主機；

複數台 USB 裝置；以及

一 USB 集線器，具有複數個上傳埠與複數個下傳埠，各該上傳埠分別連接至各該電腦主機中，以及各該下傳埠分別連接至各該 USB 裝置中，該 USB 集線器用以上傳由各



（請先閱讀背面之注意事項再填寫本頁）

裝 訂 線

經濟部中央標準局員工消費合作社印製

本紙張尺度適用中國國家標準（CNS）A4規格（210×297公釐）

六、申請專利範圍

該 USB 裝置送來的資料及下傳由各該電腦主機送來的資料；

其中，在正常操作下，僅有一台該電腦主機具有該 USB 集線器之使用權，代表該電腦主機可控制所有接在該 USB 集線器之該些下傳埠的該些 USB 裝置資料存取，當有另一台該電腦主機送出一集線器要求指令給該 USB 集線器，要求使用該 USB 集線器及控制該 USB 集線器下接之該些 USB 裝置時，該 USB 集線器會進入一集線器仲裁狀態，並在一適當時機後將其使用權轉交給該另一台該電腦主機，此時該另一台該電腦主機即具有該 USB 集線器之使用權，並可控制所有接在該 USB 集線器之該些下傳埠的該些 USB 裝置資料存取，達到不同該電腦主機切換使用該 USB 集線器之目的。

17.如申請專利範圍第 16 項所述之電腦系統，其中該 USB 集線器可具有一手動切換開關，經由控制該手動切換開關可達到不同該電腦主機切換使用該 USB 集線器之目的。

18.如申請專利範圍第 16 項所述之電腦系統，其中該 USB 集線器包括：

一連結佈線器，連接該些上傳埠，該連結佈線器用以解碼來自各該電腦主機送來的指令，並回應相關的資料給各該電腦主機，同時送出解析後之一結果訊號，且該連結佈線器接收一控制訊號，並依據該控制訊號切換連接至該些上傳埠之一，其中，被切換連接之該上傳埠係爲集線器



（請先閱讀背面之注意事項再填寫本頁）
裝
訂
經濟部中央標準局員工消費合作社印製
本紙張尺度適用中國國家標準（CNS）A4規格（210×297公釐）

Microchip Ex. 1006, p. 101
Microchip v. Aptiv
IPR2024-00495

六、申請專利範圍

埠，其他未連接者則爲裝置埠，而集線器埠所接之該電腦主機擁有該 USB 集線器之控制權，並控制所有接在該 USB 集線器之該些下傳埠的該些 USB 裝置資料存取；

一轉換控制器，連接該些上傳埠與該連結佈線器，用以依據該結果訊號與一手動切換，產生該控制訊號來控制各該上傳埠與該連結佈線器之連接狀態；以及

一傳統 USB 集線器，用以上傳由該些下傳埠送來的資料及下傳由該連結佈線器送來的資料，並提供其本身之狀態給該些電腦主機，使該些電腦主機依據該傳統 USB 集線器之不同狀態控制該些下傳埠。

19.如申請專利範圍第 18 項所述之電腦系統，其中該 USB 集線器之各該上傳埠包括：

一電阻，該電阻之兩端分別耦接至一電壓源與一訊號端 DP，且該電阻接收來自該轉換控制器之該控制信號，並依據該控制信號來決定各該上傳埠之斷絕/連接狀態；以及

一 USB 收發器，該 USB 收發器之一端連接至該連結佈線器，其另一端連接至該訊號端 DP 與一訊號端 DM，用以與連接該上傳埠之電腦主機間上傳或下傳資料。

20.如申請專利範圍第 18 項所述之電腦系統，其中該連結佈線器包括：

一多工器，連結於該些上傳埠與該傳統 USB 集線器間，該多工器係由該轉換控制器之輸出控制，被選擇到之該上傳埠稱爲集線器埠，其他則稱爲裝置埠；以及

一指令解譯器，用以解碼該些上傳埠從各該電腦主機



（請先閱讀背面之注意事項再填寫本頁）
裝
訂
線
經濟部中央標準局員工消費合作社印製
本紙張尺度適用中國國家標準（CNS）A4規格（210×297公釐）

Microchip Ex. 1006, p. 102
Microchip v. Aptiv
IPR2024-00495

六、申請專利範圍

送來的指令，並回應相關的資料給各該電腦主機，同時將解析之結果送至該轉換控制器中作爲控制之部分依據。

21.如申請專利範圍第 20 項所述之電腦系統，其中該指令解譯器包括微控制器或其他可解譯指令之機制。

22.如申請專利範圍第 18 項所述之電腦系統，其中該轉換控制器包括一組合邏輯控制器，用以經由該組合邏輯控制器接收來自該連結佈線器之該結果訊號與該手動切換開關之選擇，產生該控制訊號來決定哪一該上傳埠是集線器埠，同時輸出該控制信號至該些上傳埠，並在集線器埠與裝置埠切換時，對相關之埠做斷絕/連接之控制。

23.如申請專利範圍第 18 項所述之電腦系統，其中該傳統 USB 集線器包括：

一集線器中繼器，用以上傳由該些下傳埠送來的資料及下傳由該連結佈線器送來的資料；以及

一集線器控制器，連接該集線器中繼器，該集線器控制器用以提供該傳統 USB 集線器之狀態給該些電腦主機，使該些電腦主機依據該傳統 USB 集線器之不同狀態控制該些下傳埠。

24.如申請專利範圍第16項所述之電腦系統，其中各該上傳埠內含有一連接/斷絕之機制，由一轉換控制器控制不同之各該上傳埠的連接與斷絕。

25.如申請專利範圍第16項所述之電腦系統，其中各該下傳埠內含有一裝置附加/分離偵測線路，用以判斷各該下傳埠之狀態並通知該些電腦主機作爲埠狀態之更新。



（請先閱讀背面之注意事項再填寫本頁）
裝
訂
經濟部中央標準局員工消費合作社印製
本紙張尺度適用中國國家標準（CNS）A4規格（210×297公釐）

Microchip Ex. 1006, p. 103
Microchip v. Aptiv
IPR2024-00495

六、申請專利範圍

26.如申請專利範圍第16項所述之電腦系統，其中各該電腦主機分別具有一USB主機控制器，連接至各該上傳埠中，以透過該USB主機控制器控制該USB集線器。

27.如申請專利範圍第 16 項所述之電腦系統，其中該電腦主機包括個人電腦與可控制 USB 傳輸協定之任何平台。

28.如申請專利範圍第 16 項所述之電腦系統，其中各該 USB 裝置包括鍵盤、滑鼠、印表機等週邊裝置其中之一。

29.如申請專利範圍第 18 項所述之電腦系統，其中該轉換控制器包括微控制器與其他可產生該控制訊號之邏輯。

（請先閱讀背面之注意事項再填寫本頁）

裝

訂

線

經濟部中央標準局員工消費合作社印製



本紙張尺度適用中國國家標準（CNS）A4規格（210×297公釐）

Microchip Ex. 1006, p. 104
Microchip v. Aptiv
IPR2024-00495

470887
89104350

5464TW

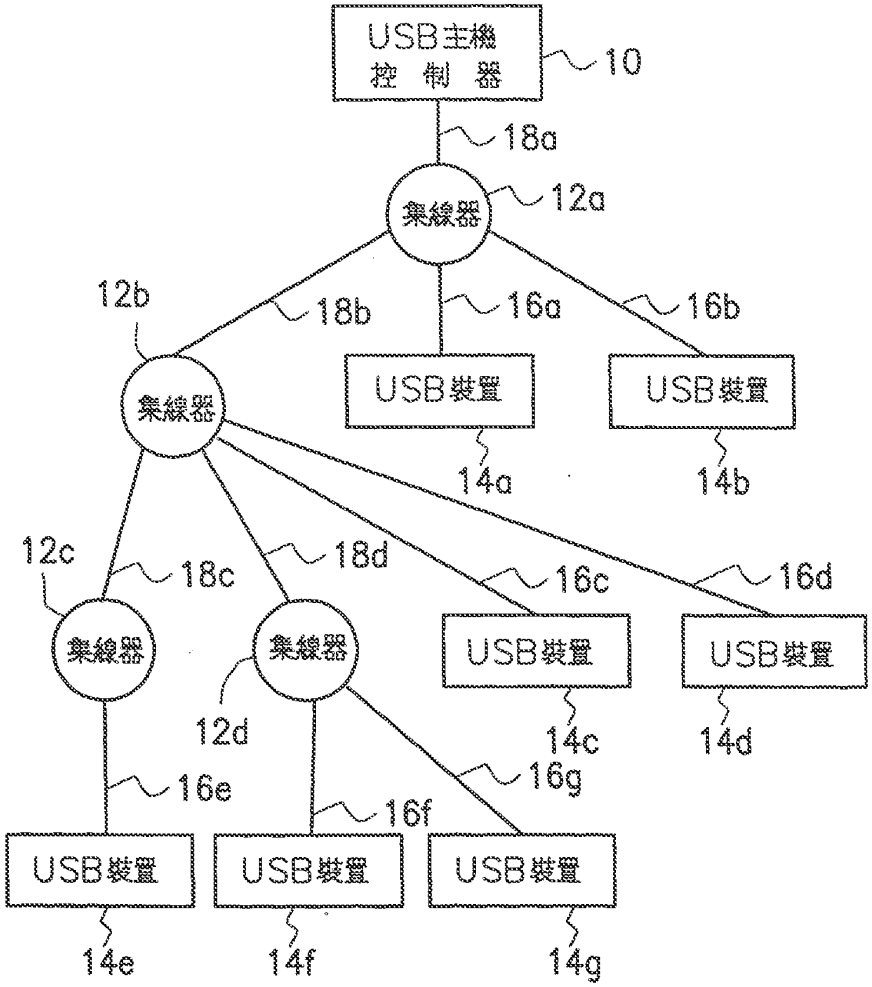


第 1 圖

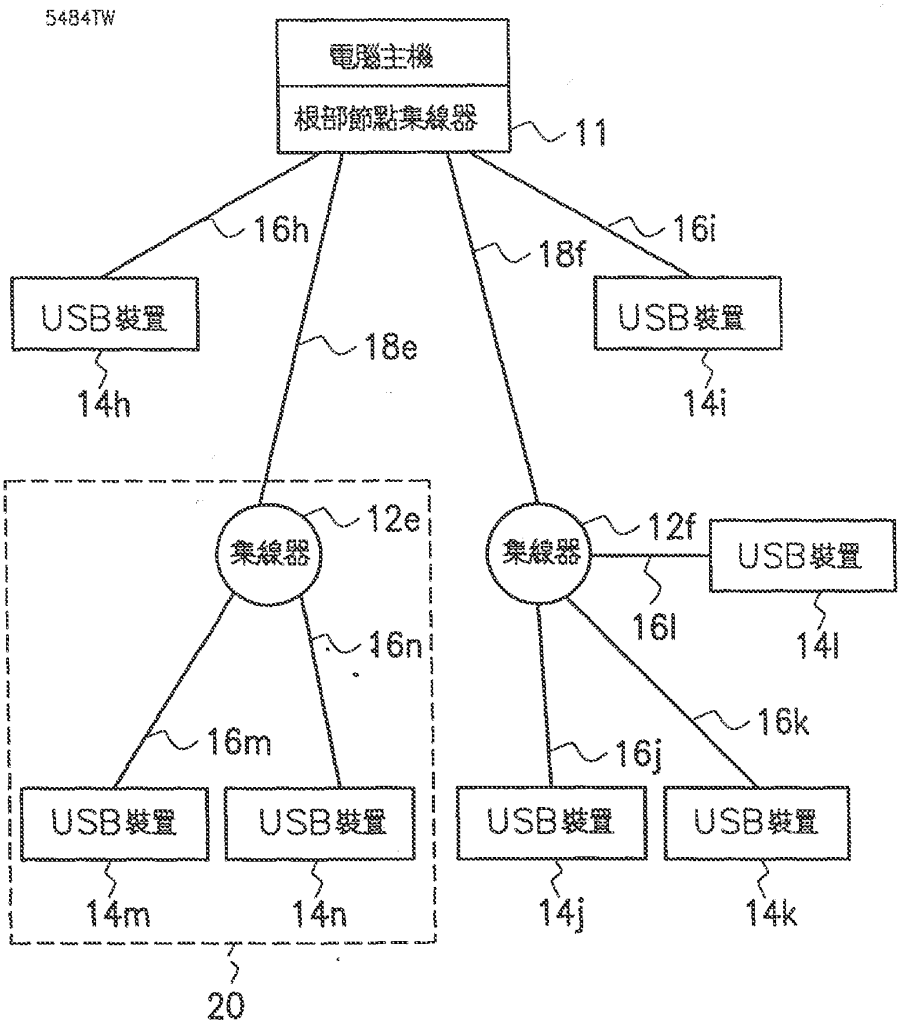
5484TW
電腦主機
根部節點集線器
11
16h
18f
16i
USB裝置
USB裝置
18e
14h
14i
12e
集線器
集線器
12f
USB裝置
16l
14l
16n
16m
16k
16j
USB裝置
USB裝置
USB裝置
USB裝置
14m
14n
14j
14k
20

第 2 圖

5484TW

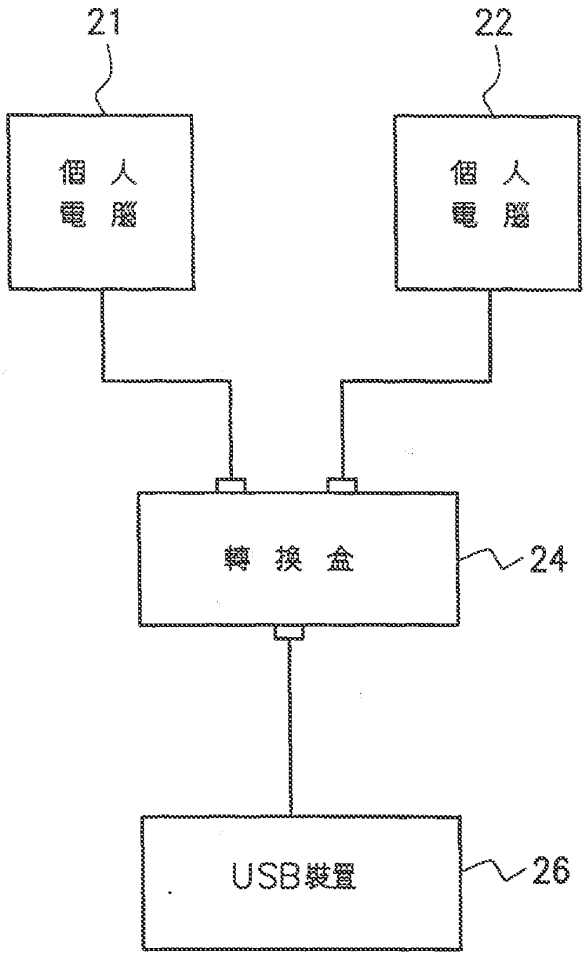


第 3 圖

5484TW

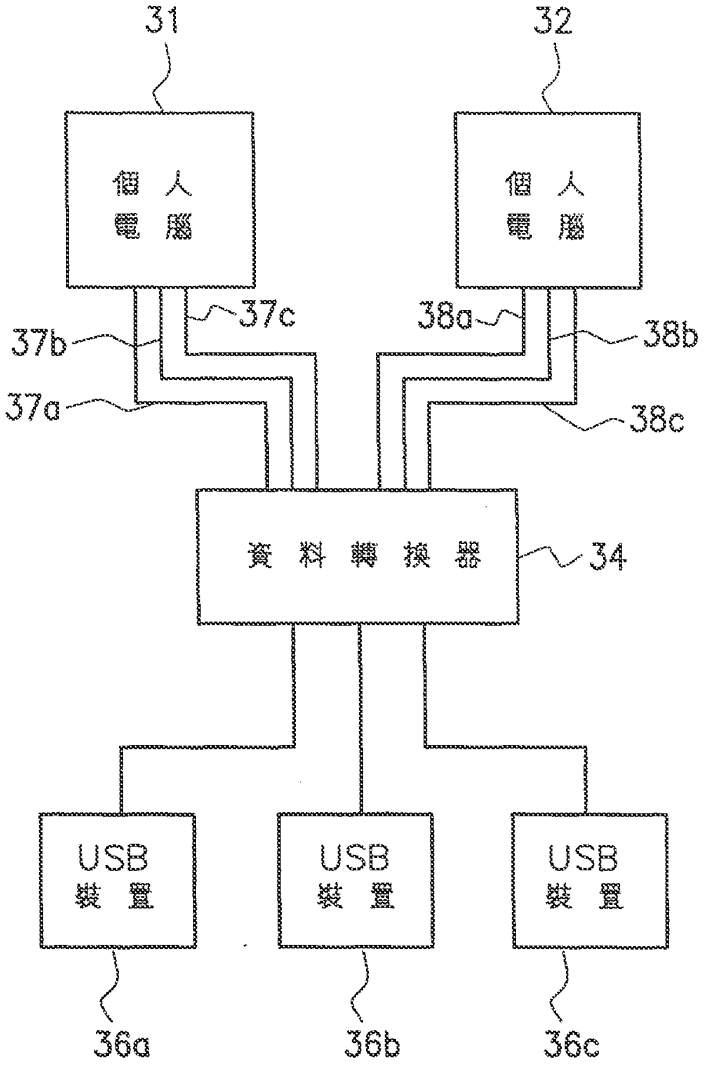
31
32
個人電腦
個人電腦
37c
38a
37b
38b
37a
38c
資料轉換器
34
USB裝置
USB裝置
USB裝置
36a
36b
36c

第 4 圖

5484TW

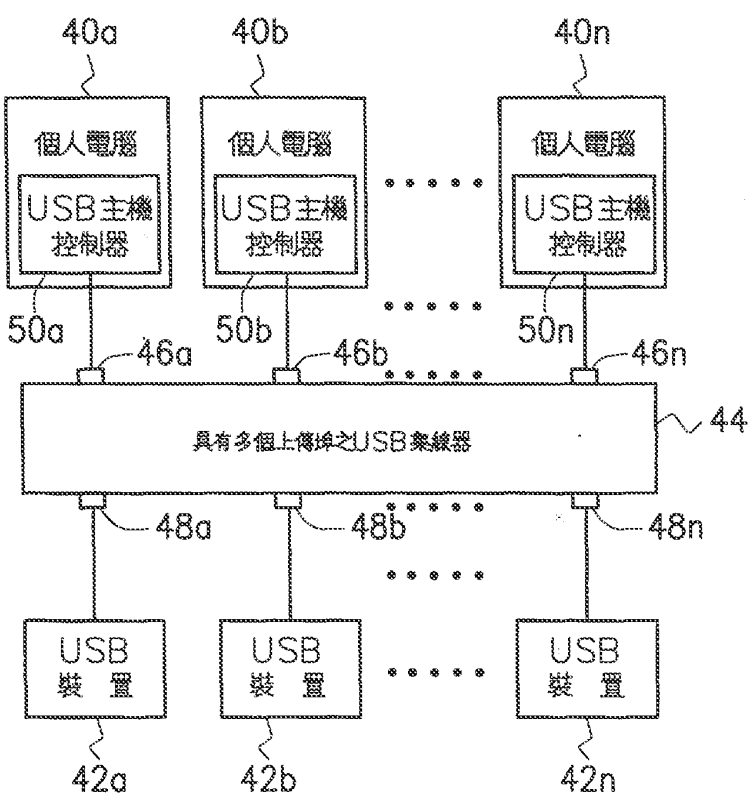


第 5 圖

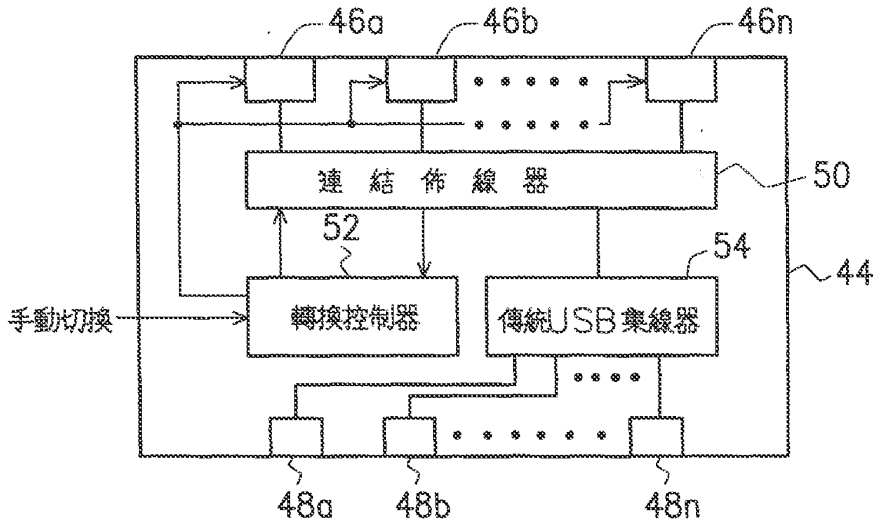


第 6 圖

5484TW

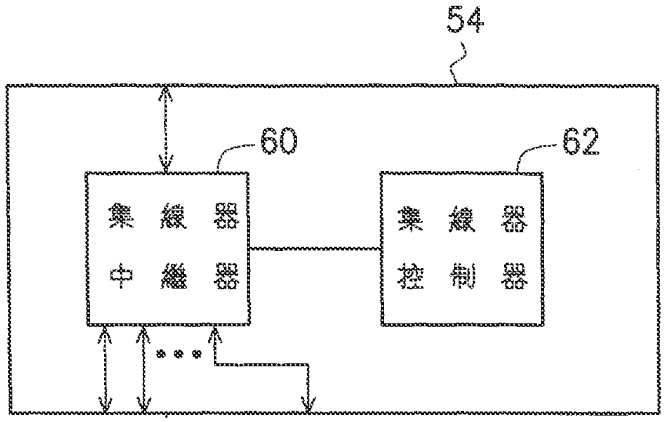


第 7 圖

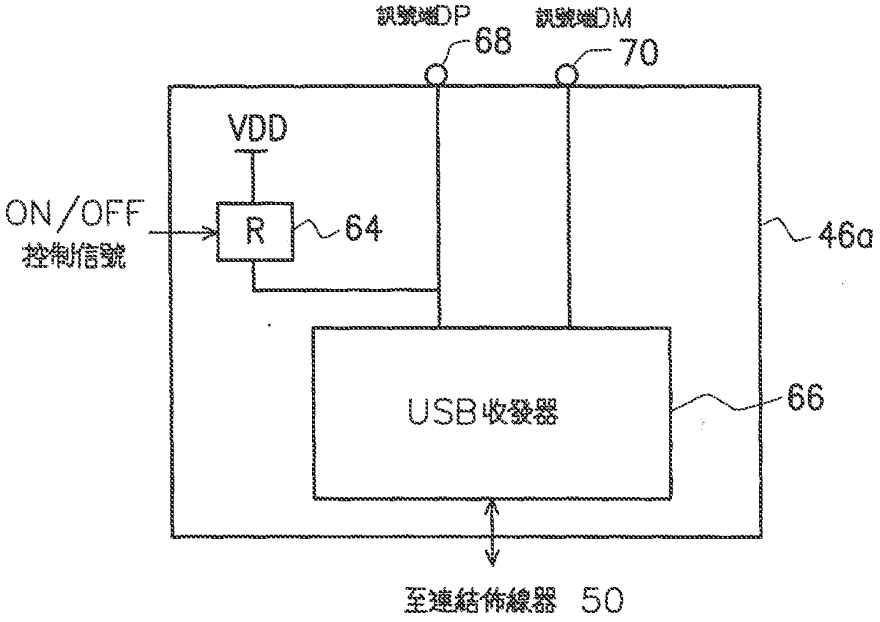


第 8 圖

5484TW

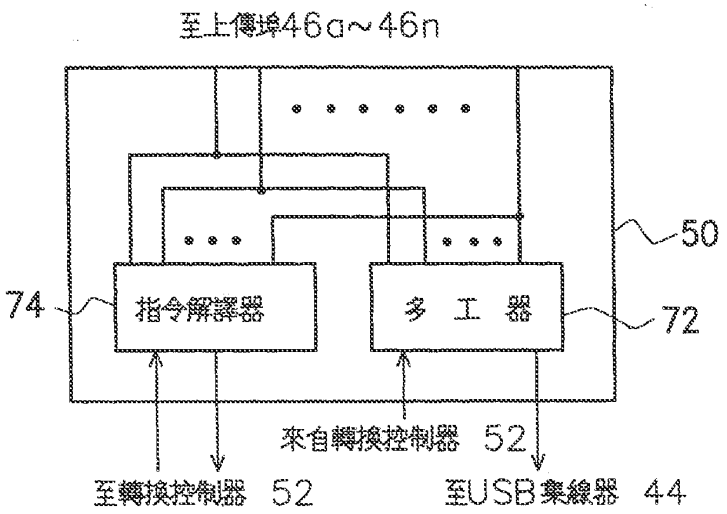


第 9 圖

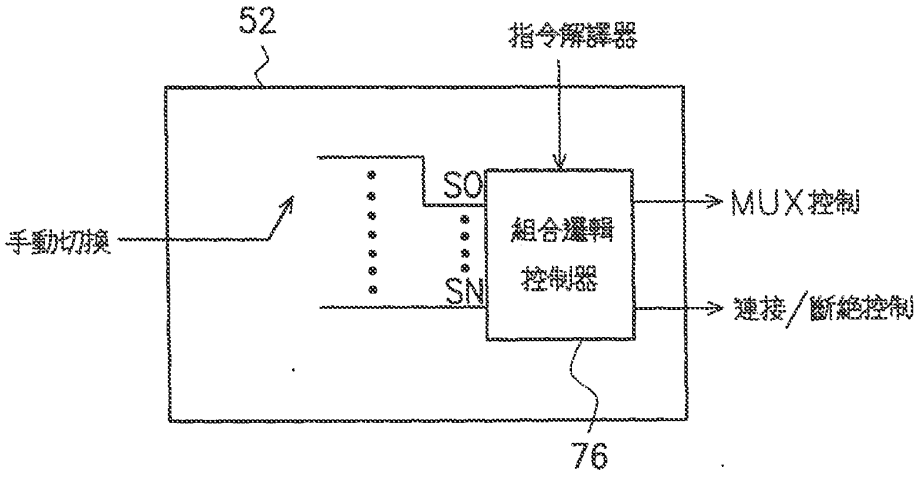


第10圖

# Electronic Acknowledgement Receipt

| | |
|---|---|
| **EFS ID:** | 27301903 |
| **Application Number:** | 15257096 |
| **International Application Number:** | |
| **Confirmation Number:** | 3519 |
| **Title of Invention:** | FLEXIBLE MOBILE DEVICE CONNECTIVITY TO AUTOMOTIVE SYSTEMS WITH USB HUBS |
| **First Named Inventor/Applicant Name:** | Robert M. Voto |
| **Customer Number:** | 22851 |
| **Filer:** | Lawrence Dean Hazelton/Kandace Powell |
| **Filer Authorized By:** | Lawrence Dean Hazelton |
| **Attorney Docket Number:** | DP-322037 CIP |
| **Receipt Date:** | 24-OCT-2016 |
| **Filing Date:** | 06-SEP-2016 |
| **Time Stamp:** | 15:26:32 |
| **Application Type:** | Utility under 35 USC 111(a) |

## Payment information:

| | |
|---|---|
| Submitted with Payment | no |

## File Listing:

| Document Number | Document Description | File Name | File Size(Bytes)/ Message Digest | Multi Part /.zip | Pages (if appl.) |
|---|---|---|---|---|---|
| 1 | Information Disclosure Statement (IDS) Form (SB08) | DP322037CIP_ids.pdf | 613212<br>17f56b8aae4d253f3eeaa8f37247153d8c98a3f9 | no | 6 |

**Warnings:**

| | | | | | |
|---|---|---|---|---|---|
| **Information:** | | | | | |
| 2 | Foreign Reference | JP2003256351A.pdf | 363900<br>03b215ded563ca6b5ccd3092b6b9dc9b16635936 | no | 7 |
| **Warnings:** | | | | | |
| The page size in the PDF is too large. The pages should be 8.5 x 11 or A4. If this PDF is submitted, the pages will be resized upon entry into the Image File Wrapper and may affect subsequent processing | | | | | |
| **Information:** | | | | | |
| 3 | Foreign Reference | TW470887B.pdf | 1302665<br>eff0033415ae51b6a54353366417e2dbffafa872 | no | 35 |
| **Warnings:** | | | | | |
| The page size in the PDF is too large. The pages should be 8.5 x 11 or A4. If this PDF is submitted, the pages will be resized upon entry into the Image File Wrapper and may affect subsequent processing | | | | | |
| **Information:** | | | | | |
| 4 | Non Patent Literature | 03043.pdf | 733304<br>b7e140d0db2a39b012a23f8200854063ac8ec099 | no | 45 |
| **Warnings:** | | | | | |
| **Information:** | | | | | |
| 5 | Non Patent Literature | 42904.pdf | 497815<br>cfc5eb6a8bcdcea15a88b2d1f14aad02eeeb746c | no | 10 |
| **Warnings:** | | | | | |
| **Information:** | | | | | |
| 6 | Non Patent Literature | APC_USB.pdf | 97336<br>6044662ea171a74be5a42eee345a40101cf42c08 | no | 3 |
| **Warnings:** | | | | | |
| **Information:** | | | | | |
| 7 | Non Patent Literature | Tyre_Terian.pdf | 85360<br>f77737a12f3f3311efe88329b604ca1e7ca74130 | no | 7 |
| **Warnings:** | | | | | |
| **Information:** | | | | | |
| | | | **Total Files Size (in bytes):** | 3693592 | |

**This Acknowledgement Receipt evidences receipt on the noted date by the USPTO of the indicated documents, characterized by the applicant, and including page counts, where applicable. It serves as evidence of receipt similar to a Post Card, as described in MPEP 503.**

**New Applications Under 35 U.S.C. 111**
**If a new application is being filed and the application includes the necessary components for a filing date (see 37 CFR 1.53(b)-(d) and MPEP 506), a Filing Receipt (37 CFR 1.54) will be issued in due course and the date shown on this Acknowledgement Receipt will establish the filing date of the application.**

**National Stage of an International Application under 35 U.S.C. 371**
**If a timely submission to enter the national stage of an international application is compliant with the conditions of 35 U.S.C. 371 and other applicable requirements a Form PCT/DO/EO/903 indicating acceptance of the application as a national stage submission under 35 U.S.C. 371 will be issued in addition to the Filing Receipt, in due course.**

**New International Application Filed with the USPTO as a Receiving Office**
**If a new international application is being filed and the international application includes the necessary components for an international filing date (see PCT Article 11 and MPEP 1810), a Notification of the International Application Number and of the International Filing Date (Form PCT/RO/105) will be issued in due course, subject to prescriptions concerning national security, and the date shown on this Acknowledgement Receipt will establish the international filing date of the application.**

PTO/AIA/80 (07-12)
Approved for use through 11/30/2014. OMB 0651-0035
U.S. Patent and Trademark Office; U.S DEPARTMENT OF COMMERCE
Under the Paperwork Reduction Act of 1995, no persons are required to respond to a collection of information unless it displays a valid OMB control number.

# POWER OF ATTORNEY TO PROSECUTE APPLICATIONS BEFORE THE USPTO

I hereby revoke all previous powers of attorney given in the application identified in the attached statement under 37 CFR 3.73(c).

I hereby appoint:

[■] Practitioners associated with Customer Number: 22851

**OR**

[ ] Practitioner(s) named below (if more than ten patent practitioners are to be named, then a customer number must be used):

| Name | Registration Number | Name | Registration Number |
|---|---|---|---|
| | | | |
| | | | |
| | | | |
| | | | |
| | | | |

As attorney(s) or agent(s) to represent the undersigned before the United States Patent and Trademark Office (USPTO) in connection with any and all patent applications assigned only to the undersigned according to the USPTO assignment records or assignments documents attached to this form in accordance with 37 CFR 3.73(c).

Please change the correspondence address for the application identified in the attached statement under 37 CFR 3.73(c) to:

[ ] The address associated with Customer Number:

**OR**

| | | | |
|---|---|---|---|
| [ ] Firm or Individual Name | | | |
| Address | | | |
| City | | State | Zip |
| Country | | | |
| Telephone | | Email | |

Assignee Name and Address: Delphi Technologies, Inc.
P. O. Box 5052
M/C: 483-400-402
Troy, MI 48007-5052

**A copy of this form, together with a statement under 37 CFR 3.73(c) (Form PTO/AIA/96 or equivalent) is required to be Filed in each application in which this form is used. The statement under 37 CFR 3.73(c) may be completed by one of The practitioners appointed in this form, and must identify the application in which this Power of Attorney is to be filed.**

**SIGNATURE of Assignee of Record**

The individual whose signature and title is supplied below is authorized to act on behalf of the assignee

| | | | |
|---|---|---|---|
| Signature | /Craig A. Baldwin/ | Date | 27 October 2016 |
| Name | Craig A. Baldwin | Telephone | 248-813-1214 |
| Title | Assistant Secretary, Delphi Technologies, Inc. | | |

This collection of information is required by 37 CFR 1.31, 1.32 and 1.33. The information is required to obtain or retain a benefit by the public which is to file (and by the USPTO to process) an application. Confidentiality is governed by 35 U.S.C. 122 and 37 CFR 1.11 and 1.14. This collection is estimated to take 3 minutes to complete, including gathering, preparing, and submitting the completed application form to the USPTO. Time will vary depending upon the individual case. Any comments on the amount of time you require to complete this form and/or suggestions for reducing this burden, should be sent to the Chief Information Officer, U.S. Patent and Trademark Office, U.S. Department of Commerce, P.O. Box 1450, Alexandria, VA 22313-1450. DO NOT SEND FEES OR COMPLETED FORMS TO THIS ADDRESS. **SEND TO: Commissioner for Patents, P.O. Box 1450, Alexandria, VA 22313-1450.**

If you need assistance in completing the form, call 1-800-PTO-9199 and select option 2.

# Privacy Act Statement

The **Privacy Act of 1974 (P.L. 93-579)** requires that you be given certain information in connection with your submission of the attached form related to a patent application or patent. Accordingly, pursuant to the requirements of the Act, please be advised that: (1) the general authority for the collection of this information is 35 U.S.C. 2(b)(2); (2) furnishing of the information solicited is voluntary; and (3) the principal purpose for which the information is used by the U.S. Patent and Trademark Office is to process and/or examine your submission related to a patent application or patent. If you do not furnish the requested information, the U.S. Patent and Trademark Office may not be able to process and/or examine your submission, which may result in termination of proceedings or abandonment of the application or expiration of the patent.

The information provided by you in this form will be subject to the following routine uses:

1. The information on this form will be treated confidentially to the extent allowed under the Freedom of Information Act (5 U.S.C. 552) and the Privacy Act (5 U.S.C 552a). Records from this system of records may be disclosed to the Department of Justice to determine whether disclosure of these records is required by the Freedom of Information Act.
2. A record from this system of records may be disclosed, as a routine use, in the course of presenting evidence to a court, magistrate, or administrative tribunal, including disclosures to opposing counsel in the course of settlement negotiations.
3. A record in this system of records may be disclosed, as a routine use, to a Member of Congress submitting a request involving an individual, to whom the record pertains, when the individual has requested assistance from the Member with respect to the subject matter of the record.
4. A record in this system of records may be disclosed, as a routine use, to a contractor of the Agency having need for the information in order to perform a contract. Recipients of information shall be required to comply with the requirements of the Privacy Act of 1974, as amended, pursuant to 5 U.S.C. 552a(m).
5. A record related to an International Application filed under the Patent Cooperation Treaty in this system of records may be disclosed, as a routine use, to the International Bureau of the World Intellectual Property Organization, pursuant to the Patent Cooperation Treaty.
6. A record in this system of records may be disclosed, as a routine use, to another federal agency for purposes of National Security review (35 U.S.C. 181) and for review pursuant to the Atomic Energy Act (42 U.S.C. 218(c)).
7. A record from this system of records may be disclosed, as a routine use, to the Administrator, General Services, or his/her designee, during an inspection of records conducted by GSA as part of that agency's responsibility to recommend improvements in records management practices and programs, under authority of 44 U.S.C. 2904 and 2906. Such disclosure shall be made in accordance with the GSA regulations governing inspection of records for this purpose, and any other relevant (*i.e.*, GSA or Commerce) directive. Such disclosure shall not be used to make determinations about individuals.
8. A record from this system of records may be disclosed, as a routine use, to the public after either publication of the application pursuant to 35 U.S.C. 122(b) or issuance of a patent pursuant to 35 U.S.C. 151. Further, a record may be disclosed, subject to the limitations of 37 CFR 1.14, as a routine use, to the public if the record was filed in an application which became abandoned or in which the proceedings were terminated and which application is referenced by either a published application, an application open to public inspection or an issued patent.
9. A record from this system of records may be disclosed, as a routine use, to a Federal, State, or local law enforcement agency, if the USPTO becomes aware of a violation or potential violation of law or regulation.

PTO/AIA/96 (08-12)
Approved for use through 01/31/2013. OMB 0651-0031
U.S. Patent and Trademark Office; U.S. DEPARTMENT OF COMMERCE
Under the Paperwork Reduction Act of 1995, no persons are required to respond to a collection of information unless it displays a valid OMB control number.

# STATEMENT UNDER 37 CFR 3.73(c)

Applicant/Patent Owner: Robert M. Voto, et al.

Application No./Patent No.: 15/257,096 Filed/Issue Date: 06 September 2016

Titled: FLEXIBLT MOBILE DEVICE CONNECTIVITY TO AUTOMOTIVE SYSTEMS WITH USB HUBS

Delphi Technologies, Inc., a corporation

(Name of Assignee) (Type of Assignee, e.g., corporation, partnership, university, government agency, etc.)

states that, for the patent application/patent identified above, it is (choose **one** of options 1, 2, 3 or 4 below):

1. ☑ The assignee of the entire right, title, and interest.

2. ☐ An assignee of less than the entire right, title, and interest (check applicable box):

☐ The extent (by percentage) of its ownership interest is _____%. Additional Statement(s) by the owners holding the balance of the interest must be submitted to account for 100% of the ownership interest.

☐ There are unspecified percentages of ownership. The other parties, including inventors, who together own the entire right, title and interest are:

Additional Statement(s) by the owner(s) holding the balance of the interest must be submitted to account for the entire right, title, and interest.

3. ☐ The assignee of an undivided interest in the entirety (a complete assignment from one of the joint inventors was made). The other parties, including inventors, who together own the entire right, title, and interest are:

Additional Statement(s) by the owner(s) holding the balance of the interest must be submitted to account for the entire right, title, and interest.

4. ☐ The recipient, via a court proceeding or the like (*e.g.*, bankruptcy, probate), of an undivided interest in the entirety (a complete transfer of ownership interest was made). The certified document(s) showing the transfer is attached.

The interest identified in option 1, 2 or 3 above (not option 4) is evidenced by either (choose **one** of options A or B below):

A. ☑ An assignment from the inventor(s) of the patent application/patent identified above. The assignment was recorded in the United States Patent and Trademark Office at Reel _____, Frame _____, or for which a copy thereof is attached.

B. ☐ A chain of title from the inventor(s), of the patent application/patent identified above, to the current assignee as follows:

1. From: _____ To: _____

The document was recorded in the United States Patent and Trademark Office at

Reel _____, Frame _____, or for which a copy thereof is attached.

2. From: _____ To: _____

The document was recorded in the United States Patent and Trademark Office at

Reel _____, Frame _____, or for which a copy thereof is attached.



This collection of information is required by 37 CFR 3.73(b). The information is required to obtain or retain a benefit by the public which is to file (and by the USPTO to process) an application. Confidentiality is governed by 35 U.S.C. 122 and 37 CFR 1.11 and 1.14. This collection is estimated to take 12 minutes to complete, including gathering, preparing, and submitting the completed application form to the USPTO. Time will vary depending upon the individual case. Any comments on the amount of time you require to complete this form and/or suggestions for reducing this burden, should be sent to the Chief Information Officer, U.S. Patent and Trademark Office, U.S. Department of Commerce, P.O. Box 1450, Alexandria, VA 22313-1450. DO NOT SEND FEES OR COMPLETED FORMS TO THIS ADDRESS. **SEND TO: Commissioner for Patents, P.O. Box 1450, Alexandria, VA 22313-1450.**

*If you need assistance in completing the form, call 1-800-PTO-9199 and select option 2.*

Under the Paperwork Reduction Act of 1995, no persons are required to respond to a collection of information unless it displays a valid OMB control number.

## STATEMENT UNDER 37 CFR 3.73(c)

3. From: _____ To: _____

The document was recorded in the United States Patent and Trademark Office at

Reel _____, Frame _____, or for which a copy thereof is attached.

4. From: _____ To: _____

The document was recorded in the United States Patent and Trademark Office at

Reel _____, Frame _____, or for which a copy thereof is attached.

5. From: _____ To: _____

The document was recorded in the United States Patent and Trademark Office at

Reel _____, Frame _____, or for which a copy thereof is attached.

6. From: _____ To: _____

The document was recorded in the United States Patent and Trademark Office at

Reel _____, Frame _____, or for which a copy thereof is attached.

☐ Additional documents in the chain of title are listed on a supplemental sheet(s).

☐ As required by 37 CFR 3.73(c)(1)(i), the documentary evidence of the chain of title from the original owner to the assignee was, or concurrently is being, submitted for recordation pursuant to 37 CFR 3.11.

[NOTE: A separate copy (i.e., a true copy of the original assignment document(s)) must be submitted to Assignment Division in accordance with 37 CFR Part 3, to record the assignment in the records of the USPTO. See MPEP 302.08]

The undersigned (whose title is supplied below) is authorized to act on behalf of the assignee.

| | |
|---|---|
| /Craig A. Baldwin/ | 27 October 2016 |
| Signature | Date |
| Craig A. Baldwin | Assistant Secretary 37772 |
| Printed or Typed Name | Title or Registration Number |

# Privacy Act Statement

The **Privacy Act of 1974 (P.L. 93-579)** requires that you be given certain information in connection with your submission of the attached form related to a patent application or patent. Accordingly, pursuant to the requirements of the Act, please be advised that: (1) the general authority for the collection of this information is 35 U.S.C. 2(b)(2); (2) furnishing of the information solicited is voluntary; and (3) the principal purpose for which the information is used by the U.S. Patent and Trademark Office is to process and/or examine your submission related to a patent application or patent. If you do not furnish the requested information, the U.S. Patent and Trademark Office may not be able to process and/or examine your submission, which may result in termination of proceedings or abandonment of the application or expiration of the patent.

The information provided by you in this form will be subject to the following routine uses:

1. The information on this form will be treated confidentially to the extent allowed under the Freedom of Information Act (5 U.S.C. 552) and the Privacy Act (5 U.S.C 552a). Records from this system of records may be disclosed to the Department of Justice to determine whether disclosure of these records is required by the Freedom of Information Act.
2. A record from this system of records may be disclosed, as a routine use, in the course of presenting evidence to a court, magistrate, or administrative tribunal, including disclosures to opposing counsel in the course of settlement negotiations.
3. A record in this system of records may be disclosed, as a routine use, to a Member of Congress submitting a request involving an individual, to whom the record pertains, when the individual has requested assistance from the Member with respect to the subject matter of the record.
4. A record in this system of records may be disclosed, as a routine use, to a contractor of the Agency having need for the information in order to perform a contract. Recipients of information shall be required to comply with the requirements of the Privacy Act of 1974, as amended, pursuant to 5 U.S.C. 552a(m).
5. A record related to an International Application filed under the Patent Cooperation Treaty in this system of records may be disclosed, as a routine use, to the International Bureau of the World Intellectual Property Organization, pursuant to the Patent Cooperation Treaty.
6. A record in this system of records may be disclosed, as a routine use, to another federal agency for purposes of National Security review (35 U.S.C. 181) and for review pursuant to the Atomic Energy Act (42 U.S.C. 218(c)).
7. A record from this system of records may be disclosed, as a routine use, to the Administrator, General Services, or his/her designee, during an inspection of records conducted by GSA as part of that agency's responsibility to recommend improvements in records management practices and programs, under authority of 44 U.S.C. 2904 and 2906. Such disclosure shall be made in accordance with the GSA regulations governing inspection of records for this purpose, and any other relevant (*i.e.*, GSA or Commerce) directive. Such disclosure shall not be used to make determinations about individuals.
8. A record from this system of records may be disclosed, as a routine use, to the public after either publication of the application pursuant to 35 U.S.C. 122(b) or issuance of a patent pursuant to 35 U.S.C. 151. Further, a record may be disclosed, subject to the limitations of 37 CFR 1.14, as a routine use, to the public if the record was filed in an application which became abandoned or in which the proceedings were terminated and which application is referenced by either a published application, an application open to public inspection or an issued patent.
9. A record from this system of records may be disclosed, as a routine use, to a Federal, State, or local law enforcement agency, if the USPTO becomes aware of a violation or potential violation of law or regulation.

PTO/AIA/01 (06-12)
Approved for use through 01/31/2014. OMB 0651-0032
U.S. Patent and Trademark Office; U.S. DEPARTMENT OF COMMERCE
Under the Paperwork Reduction Act of 1995, no persons are required to respond to a collection of information unless it displays a valid OMB control number.

# DECLARATION (37 CFR 1.63) FOR UTILITY OR DESIGN APPLICATION USING AN APPLICATION DATA SHEET (37 CFR 1.76)

| Title of Invention | FLEXIBLE MOBILE DEVICE CONNECTIVITY TO AUTOMOTIVE SYSTEMS WITH USB HUBS |
|---|---|

As the below named inventor, I hereby declare that:

This declaration is directed to:

☐ The attached application, or

☒ United States application or PCT international application number 15/257,096

filed on 06 September 2016.

The above-identified application was made or authorized to be made by me.

I believe that I am the original inventor or an original joint inventor of a claimed invention in the application.

I hereby acknowledge that any willful false statement made in this declaration is punishable under 18 U.S.C. 1001 by fine or imprisonment of not more than five (5) years, or both.

## WARNING:

Petitioner/applicant is cautioned to avoid submitting personal information in documents filed in a patent application that may contribute to identity theft. Personal information such as social security numbers, bank account numbers, or credit card numbers (other than a check or credit card authorization form PTO-2038 submitted for payment purposes) is never required by the USPTO to support a petition or an application. If this type of personal information is included in documents submitted to the USPTO, petitioners/applicants should consider redacting such personal information from the documents before submitting them to the USPTO. Petitioner/applicant is advised that the record of a patent application is available to the public after publication of the application (unless a non-publication request in compliance with 37 CFR 1.213(a) is made in the application) or issuance of a patent. Furthermore, the record from an abandoned application may also be available to the public if the application is referenced in a published application or an issued patent (see 37 CFR 1.14). Checks and credit card authorization forms PTO-2038 submitted for payment purposes are not retained in the application file and therefore are not publicly available.

LEGAL NAME OF INVENTOR

Inventor: Robert M. Voto Date (Optional) :

Signature: Robert M Voto

Note: An application data sheet (PTO/SB/14 or equivalent), including naming the entire inventive entity, must accompany this form or must have been previously filed. Use an additional PTO/AIA/01 form for each additional inventor.

This collection of information is required by 35 U.S.C. 115 and 37 CFR 1.63. The information is required to obtain or retain a benefit by the public which is to file (and by the USPTO to process) an application. Confidentiality is governed by 35 U.S.C. 122 and 37 CFR 1.11 and 1.14. This collection is estimated to take 1 minute to complete, including gathering, preparing, and submitting the completed application form to the USPTO. Time will vary depending upon the individual case. Any comments on the amount of time you require to complete this form and/or suggestions for reducing this burden, should be sent to the Chief Information Officer, U.S. Patent and Trademark Office, U.S. Department of Commerce, P.O. Box 1450, Alexandria, VA 22313-1450. DO NOT SEND FEES OR COMPLETED FORMS TO THIS ADDRESS. **SEND TO: Commissioner for Patents, P.O. Box 1450, Alexandria, VA 22313-1450.**

*If you need assistance in completing the form, call 1-800-PTO-9199 and select option 2.*

PTO/AIA/01 (06-12)
Approved for use through 01/31/2014. OMB 0651-0032
U.S. Patent and Trademark Office; U.S. DEPARTMENT OF COMMERCE
Under the Paperwork Reduction Act of 1995, no persons are required to respond to a collection of information unless it displays a valid OMB control number.

# DECLARATION (37 CFR 1.63) FOR UTILITY OR DESIGN APPLICATION USING AN APPLICATION DATA SHEET (37 CFR 1.76)

| Title of Invention | FLEXIBLE MOBILE DEVICE CONNECTIVITY TO AUTOMOTIVE SYSTEMS WITH USB HUBS |
|---|---|

As the below named inventor, I hereby declare that:

This declaration is directed to:

☐ The attached application, or

☒ United States application or PCT international application number 15/257,096

filed on 06 September 2016.

The above-identified application was made or authorized to be made by me.

I believe that I am the original inventor or an original joint inventor of a claimed invention in the application.

I hereby acknowledge that any willful false statement made in this declaration is punishable under 18 U.S.C. 1001 by fine or imprisonment of not more than five (5) years, or both.

## WARNING:

Petitioner/applicant is cautioned to avoid submitting personal information in documents filed in a patent application that may contribute to identity theft. Personal information such as social security numbers, bank account numbers, or credit card numbers (other than a check or credit card authorization form PTO-2038 submitted for payment purposes) is never required by the USPTO to support a petition or an application. If this type of personal information is included in documents submitted to the USPTO, petitioners/applicants should consider redacting such personal information from the documents before submitting them to the USPTO. Petitioner/applicant is advised that the record of a patent application is available to the public after publication of the application (unless a non-publication request in compliance with 37 CFR 1.213(a) is made in the application) or issuance of a patent. Furthermore, the record from an abandoned application may also be available to the public if the application is referenced in a published application or an issued patent (see 37 CFR 1.14). Checks and credit card authorization forms PTO-2038 submitted for payment purposes are not retained in the application file and therefore are not publicly available.

LEGAL NAME OF INVENTOR

Inventor: Shyambabu Yeda Date (Optional) :

Signature:

Note: An application data sheet (PTO/SB/14 or equivalent), including naming the entire inventive entity, must accompany this form or must have been previously filed. Use an additional PTO/AIA/01 form for each additional inventor.

This collection of information is required by 35 U.S.C. 115 and 37 CFR 1.63. The information is required to obtain or retain a benefit by the public which is to file (and by the USPTO to process) an application. Confidentiality is governed by 35 U.S.C. 122 and 37 CFR 1.11 and 1.14. This collection is estimated to take 1 minute to complete, including gathering, preparing, and submitting the completed application form to the USPTO. Time will vary depending upon the individual case. Any comments on the amount of time you require to complete this form and/or suggestions for reducing this burden, should be sent to the Chief Information Officer, U.S. Patent and Trademark Office, U.S. Department of Commerce, P.O. Box 1450, Alexandria, VA 22313-1450. DO NOT SEND FEES OR COMPLETED FORMS TO THIS ADDRESS. **SEND TO: Commissioner for Patents, P.O. Box 1450, Alexandria, VA 22313-1450.**

*If you need assistance in completing the form, call 1-800-PTO-9199 and select option 2.*

PTO/AIA/01 (06-12)
Approved for use through 01/31/2014. OMB 0651-0032
U.S. Patent and Trademark Office; U.S. DEPARTMENT OF COMMERCE
Under the Paperwork Reduction Act of 1995, no persons are required to respond to a collection of information unless it displays a valid OMB control number.

# DECLARATION (37 CFR 1.63) FOR UTILITY OR DESIGN APPLICATION USING AN APPLICATION DATA SHEET (37 CFR 1.76)

| Title of Invention | FLEXIBLE MOBILE DEVICE CONNECTIVITY TO AUTOMOTIVE SYSTEMS WITH USB HUBS |
|---|---|

As the below named inventor, I hereby declare that:

This declaration is directed to:

☐ The attached application, or

☒ United States application or PCT international application number 15/257,096 filed on 06 September 2016.

The above-identified application was made or authorized to be made by me.

I believe that I am the original inventor or an original joint inventor of a claimed invention in the application.

I hereby acknowledge that any willful false statement made in this declaration is punishable under 18 U.S.C. 1001 by fine or imprisonment of not more than five (5) years, or both.

## WARNING:

Petitioner/applicant is cautioned to avoid submitting personal information in documents filed in a patent application that may contribute to identity theft. Personal information such as social security numbers, bank account numbers, or credit card numbers (other than a check or credit card authorization form PTO-2038 submitted for payment purposes) is never required by the USPTO to support a petition or an application. If this type of personal information is included in documents submitted to the USPTO, petitioners/applicants should consider redacting such personal information from the documents before submitting them to the USPTO. Petitioner/applicant is advised that the record of a patent application is available to the public after publication of the application (unless a non-publication request in compliance with 37 CFR 1.213(a) is made in the application) or issuance of a patent. Furthermore, the record from an abandoned application may also be available to the public if the application is referenced in a published application or an issued patent (see 37 CFR 1.14). Checks and credit card authorization forms PTO-2038 submitted for payment purposes are not retained in the application file and therefore are not publicly available.

LEGAL NAME OF INVENTOR

Inventor: Craig Petku Date (Optional): 10/21/2020

Signature:

Note: An application data sheet (PTO/SB/14 or equivalent), including naming the entire inventive entity, must accompany this form or must have been previously filed. Use an additional PTO/AIA/01 form for each additional inventor.

This collection of information is required by 35 U.S.C. 115 and 37 CFR 1.63. The information is required to obtain or retain a benefit by the public which is to file (and by the USPTO to process) an application. Confidentiality is governed by 35 U.S.C. 122 and 37 CFR 1.11 and 1.14. This collection is estimated to take 1 minute to complete, including gathering, preparing, and submitting the completed application form to the USPTO. Time will vary depending upon the individual case. Any comments on the amount of time you require to complete this form and/or suggestions for reducing this burden, should be sent to the Chief Information Officer, U.S. Patent and Trademark Office, U.S. Department of Commerce, P.O. Box 1450, Alexandria, VA 22313-1450. DO NOT SEND FEES OR COMPLETED FORMS TO THIS ADDRESS. **SEND TO: Commissioner for Patents, P.O. Box 1450, Alexandria, VA 22313-1450.**

*If you need assistance in completing the form, call 1-800-PTO-9199 and select option 2.*

# Electronic Acknowledgement Receipt

| | |
|---|---|
| **EFS ID:** | 27350514 |
| **Application Number:** | 15257096 |
| **International Application Number:** | |
| **Confirmation Number:** | 3519 |
| **Title of Invention:** | FLEXIBLE MOBILE DEVICE CONNECTIVITY TO AUTOMOTIVE SYSTEMS WITH USB HUBS |
| **First Named Inventor/Applicant Name:** | Robert M. Voto |
| **Customer Number:** | 22851 |
| **Filer:** | Lawrence Dean Hazelton/Kandace Powell |
| **Filer Authorized By:** | Lawrence Dean Hazelton |
| **Attorney Docket Number:** | DP-322037 CIP |
| **Receipt Date:** | 28-OCT-2016 |
| **Filing Date:** | 06-SEP-2016 |
| **Time Stamp:** | 10:25:56 |
| **Application Type:** | Utility under 35 USC 111(a) |

## Payment information:

| | |
|---|---|
| Submitted with Payment | no |

## File Listing:

| Document Number | Document Description | File Name | File Size(Bytes)/ Message Digest | Multi Part /.zip | Pages (if appl.) |
|---|---|---|---|---|---|
| 1 | Transmittal Letter | DP322037_CIP_TRANS_LTR_DECLARATION.pdf | 13230<br>28d583450ecb48d5ae5da182f96dea2f405cb4fa | no | 1 |

**Warnings:**

| | | | | | |
|---|---|---|---|---|---|
| **Information:** | | | | | |
| 2 | Power of Attorney | POA_DTI_aia0080.pdf | 80536<br>e6a493b802633aaedebfd470903179eb356d914f | no | 2 |
| **Warnings:** | | | | | |
| **Information:** | | | | | |
| 3 | Assignee showing of ownership per 37 CFR 3.73 | 373c_DTI_aia0096.pdf | 117974<br>ac2d0da7518e8ba5933c0bfb423f78e5a0aabb80 | no | 3 |
| **Warnings:** | | | | | |
| **Information:** | | | | | |
| 4 | Oath or Declaration filed | DP322037CIP_Declaration_signed.pdf | 175300<br>c23928e8267958cafbbdab052cbe7efa72f1a1c0 | no | 3 |
| **Warnings:** | | | | | |
| The page size in the PDF is too large. The pages should be 8.5 x 11 or A4. If this PDF is submitted, the pages will be resized upon entry into the Image File Wrapper and may affect subsequent processing | | | | | |
| **Information:** | | | | | |
| | | | **Total Files Size (in bytes):** | 387040 | |

**This Acknowledgement Receipt evidences receipt on the noted date by the USPTO of the indicated documents, characterized by the applicant, and including page counts, where applicable. It serves as evidence of receipt similar to a Post Card, as described in MPEP 503.**

**New Applications Under 35 U.S.C. 111**
**If a new application is being filed and the application includes the necessary components for a filing date (see 37 CFR 1.53(b)-(d) and MPEP 506), a Filing Receipt (37 CFR 1.54) will be issued in due course and the date shown on this Acknowledgement Receipt will establish the filing date of the application.**

**National Stage of an International Application under 35 U.S.C. 371**
**If a timely submission to enter the national stage of an international application is compliant with the conditions of 35 U.S.C. 371 and other applicable requirements a Form PCT/DO/EO/903 indicating acceptance of the application as a national stage submission under 35 U.S.C. 371 will be issued in addition to the Filing Receipt, in due course.**

**New International Application Filed with the USPTO as a Receiving Office**
**If a new international application is being filed and the international application includes the necessary components for an international filing date (see PCT Article 11 and MPEP 1810), a Notification of the International Application Number and of the International Filing Date (Form PCT/RO/105) will be issued in due course, subject to prescriptions concerning national security, and the date shown on this Acknowledgement Receipt will establish the international filing date of the application.**

**IN THE UNITED STATES PATENT AND TRADEMARK OFFICE**

| | | | |
|---|---|---|---|
| Appl. No. | : | 15/257,096 | Confirmation No. 3519 |
| Applicant | : | Delphi Technologies, Inc. | |
| Inventors | : | Robert M. Voto, et al. | |
| Filed | : | 09/06/2016 | |
| TC/AU | : | 2181 | |
| Examiner | : | Earnest Unelus | |
| Docket No. | : | DP-322037 CIP | |
| Title | : | Flexible Mobile Device Connectivity to Automotive Systems with USB Hubs | |

**RESPONSE TO INFORMATIONAL NOTICE TO APPLICANT**

Dear Sirs:

This letter is in response to an Informational Notice to Applicant, sent September 16, 2016 for the above referenced patent application.

Enclosed is the executed declaration for inventors Robert M. Voto, Shyambabu Yeda, and Craig Petku.

A copy of the patent assignment signed by the inventors  a power of attorney statement, and a statement under 37 CFR 3.73(c) is also included herewith.

Please charge any fees due to Deposit Account No. 50-0831, Delphi Technologies, Inc.

Respectfully submitted,

/Robert J. Myers/

Robert J. Myers – 69783
Delphi Technologies, Inc.
248-813-2512

UNITED STATES PATENT AND TRADEMARK OFFICE

**UNITED STATES DEPARTMENT OF COMMERCE**
**United States Patent and Trademark Office**
Address: COMMISSIONER FOR PATENTS
P.O. Box 1450
Alexandria, Virginia 22313-1450
www.uspto.gov

| APPLICATION NO. | FILING DATE | FIRST NAMED INVENTOR | ATTORNEY DOCKET NO. | CONFIRMATION NO. |
|---|---|---|---|---|
| 15/257,096 | 09/06/2016 | Robert M. Voto | DP-322037 CIP | 3519 |

22851 7590 11/04/2016
Delphi Technologies, Inc.
P.O. Box 5052
M/C 483-400-402
Troy, MI 48007-5052

| EXAMINER |
|---|
| UNELUS, ERNEST |

| ART UNIT | PAPER NUMBER |
|---|---|
| 2181 | |

| NOTIFICATION DATE | DELIVERY MODE |
|---|---|
| 11/04/2016 | ELECTRONIC |

**Please find below and/or attached an Office communication concerning this application or proceeding.**

The time period for reply, if any, is set in the attached communication.

Notice of the Office communication was sent electronically on above-indicated "Notification Date" to the following e-mail address(es):

kandace.k.powell@delphi.com

PTOL-90A (Rev. 04/07)

| Office Action Summary | Application No. 15/257,096 | Applicant(s) VOTO ET AL. | |
|---|---|---|---|
| | Examiner ERNEST UNELUS | Art Unit 2181 | AIA (First Inventor to File) Status Yes |

***-- The MAILING DATE of this communication appears on the cover sheet with the correspondence address --***

**Period for Reply**

A SHORTENED STATUTORY PERIOD FOR REPLY IS SET TO EXPIRE 3 MONTHS FROM THE MAILING DATE OF THIS COMMUNICATION.

- Extensions of time may be available under the provisions of 37 CFR 1.136(a). In no event, however, may a reply be timely filed after SIX (6) MONTHS from the mailing date of this communication.
- If NO period for reply is specified above, the maximum statutory period will apply and will expire SIX (6) MONTHS from the mailing date of this communication.
- Failure to reply within the set or extended period for reply will, by statute, cause the application to become ABANDONED (35 U.S.C. § 133). Any reply received by the Office later than three months after the mailing date of this communication, even if timely filed, may reduce any earned patent term adjustment. See 37 CFR 1.704(b).

**Status**

1)☒ Responsive to communication(s) filed on *09/06/2016*.

☐ A declaration(s)/affidavit(s) under **37 CFR 1.130(b)** was/were filed on _____.

2a)☐ This action is **FINAL**. 2b)☒ This action is non-final.

3)☐ An election was made by the applicant in response to a restriction requirement set forth during the interview on _____; the restriction requirement and election have been incorporated into this action.

4)☐ Since this application is in condition for allowance except for formal matters, prosecution as to the merits is closed in accordance with the practice under *Ex parte Quayle*, 1935 C.D. 11, 453 O.G. 213.

**Disposition of Claims***

5)☒ Claim(s) *1-19* is/are pending in the application.

5a) Of the above claim(s) _____ is/are withdrawn from consideration.

6)☐ Claim(s) _____ is/are allowed.

7)☒ Claim(s) *1-19* is/are rejected.

8)☐ Claim(s) _____ is/are objected to.

9)☐ Claim(s) _____ are subject to restriction and/or election requirement.

* If any claims have been determined allowable, you may be eligible to benefit from the **Patent Prosecution Highway** program at a participating intellectual property office for the corresponding application. For more information, please see http://www.uspto.gov/patents/init_events/pph/index.jsp or send an inquiry to PPHfeedback@uspto.gov.

**Application Papers**

10)☐ The specification is objected to by the Examiner.

11)☒ The drawing(s) filed on *09/06/2016* is/are: a)☒ accepted or b)☐ objected to by the Examiner.

Applicant may not request that any objection to the drawing(s) be held in abeyance. See 37 CFR 1.85(a).

Replacement drawing sheet(s) including the correction is required if the drawing(s) is objected to. See 37 CFR 1.121(d).

**Priority under 35 U.S.C. § 119**

12)☐ Acknowledgment is made of a claim for foreign priority under 35 U.S.C. § 119(a)-(d) or (f).

**Certified copies:**

a)☐ All b)☐ Some** c)☐ None of the:

1.☐ Certified copies of the priority documents have been received.

2.☐ Certified copies of the priority documents have been received in Application No. _____.

3.☐ Copies of the certified copies of the priority documents have been received in this National Stage application from the International Bureau (PCT Rule 17.2(a)).

** See the attached detailed Office action for a list of the certified copies not received.

**Attachment(s)**

1) ☒ Notice of References Cited (PTO-892)

2) ☒ Information Disclosure Statement(s) (PTO/SB/08a and/or PTO/SB/08b) Paper No(s)/Mail Date *10/24/2016*.

3) ☐ Interview Summary (PTO-413) Paper No(s)/Mail Date. _____ .

4) ☐ Other: _____.



**Microchip Ex. 1006, p. 127**
**Microchip v. Aptiv**
**IPR2024-00495**

## DETAILED ACTION

The present application, filed on or after March 16, 2013, is being examined under the first inventor to file provisions of the AIA.

The instant application having Application No. 15/257096 has a total of 19 claims pending in the application; there are 2 independent claims and 17 dependent claims, all of which are ready for examination by the examiner.

## INFORMATION CONCERNING OATH/DECLARATION

### *Oath/Declaration*

The applicant's oath/declaration has been reviewed by the examiner and is found to conform to the requirements prescribed in **37 C.F.R. 1.63.**

## INFORMATION CONCERNING DRAWINGS

### *Drawings*

The applicant's drawings submitted are acceptable for examination purposes.

## ACKNOWLEDGEMENT OF REFERENCES CITED BY APPLICANT

As required by **M.P.E.P. 609(C)**, the applicant's submissions of the Information Disclosure Statement October 24, 2016 is acknowledged by the examiner and the cited reference has been considered in the examination of the claims now pending. As required by **M.P.E.P 609**

**C(2)**, a copy of the PTOL-1449 initialed and dated by the examiner is attached to the instant office action.

## REJECTIONS BASED ON PRIOR ART

### *Double Patenting*

1. The nonstatutory double patenting rejection is based on a judicially created doctrine grounded in public policy (a policy reflected in the statute) so as to prevent the unjustified or improper timewise extension of the "right to exclude" granted by a patent and to prevent possible harassment by multiple assignees. A nonstatutory obviousness-type double patenting rejection is appropriate where the conflicting claims are not identical, but at least one examined application claim is not patentably distinct from the reference claim(s) because the examined application claim is either anticipated by, or would have been obvious over, the reference claim(s). See, e.g., In re Berg, 140 F.3d 1428, 46 USPQ2d 1226 (Fed. Cir. 1998); In re Goodman, 11 F.3d 1046, 29 USPQ2d 2010 (Fed. Cir. 1993); In re Longi, 759 F.2d 887, 225 USPQ 645 (Fed. Cir. 1985); In re Van Ornum, 686 F.2d 937, 214 USPQ 761 (CCPA 1982); In re Vogel, 422 F.2d 438, 164 USPQ 619 (CCPA 1970); and In re Thorington, 418 F.2d 528, 163 USPQ 644 (CCPA 1969).

A timely filed terminal disclaimer in compliance with 37 CFR 1.321 (c) or 1.321 (d) may be used to overcome an actual or provisional rejection based on a nonstatutory double patenting ground provided the conflicting application or patent either is shown to be commonly owned with this application, or claims an invention made as a result of activities undertaken within the scope of a joint research agreement.

Effective January 1, 1994, a registered attorney or agent of record may sign a terminal disclaimer. A terminal disclaimer signed by the assignee must fully comply with 37 CFR 3.73(b).

2. **Claims 1-19** are rejected on the ground of nonstatutory double patenting over claims 1-17 of U.S. Patent No. 9,460,037. Since the claims, if allowed, would improperly extend the "right to exclude" already granted in the patent.

3. Initially, it should be noted that the present application and U.S. Patent No. 9,460,037, share one common inventor, which is Robert. The assignee for both applications is DELPHI TECHNOLOGIES, INC.

---

4. Claimed subject matter in the instant application is fully disclosed in the referenced copending application and would be covered by any patent granted on that copending application since the referenced copending application and the instant application are claiming common subject matter, as noted below. See In re Goodman, 11 F.3d1046, 29 USPQ2d 2010 (Fed. Cir. 1993).

5. Furthermore, there is no apparent reason why applicant was prevented from presenting claims corresponding to those of the instant application during prosecution of the application which matured into a patent. See *In re Schneller*, 397 F.2d 350, 158 USPQ 210 (CCPA 1968). See also **MPEP § 804**.

6. Both the instant application and patent No. 9,460,037 are directed to teach a peripheral device to communicate with a USB hub bi-directionally in a first mode and to communicate with the hub only uni-directionally in a second mode and said USB Hub configured to simultaneously broadcast data from an embedded USB Host system to a plurality of USB Ports on the hub and to transmit data from each USB Port to the embedded USB Host system

**CLOSING COMMENTS**

**CONCLUSION**

**a. STATUS OF CLAIMS IN THE APPLICATION**

The following is a summary of the treatment and status of all claims in the application as recommended by **M.P.E.P. 707.07(i):**

**a (1) CLAIMS REJECTED IN THE APPLICATION**

Per the instant office action, claims 1-19 have received a first action on the merits and are subject of a first action non-final.

**b. DIRECTION OF FUTURE CORRESPONDENCES**

Any inquiry concerning this communication or earlier communications from the examiner should be directed to Ernest Unelus whose telephone number is (571) 272-8596. The examiner can normally be reached on Monday to Friday 9:00 AM to 5:00PM.

**IMPORTANT NOTE**

If attempts to reach the above noted Examiner by telephone are unsuccessful, the Examiner's supervisor, Mr. Idriss Alrobaye, can be reached at the following telephone number: Area Code (571) 270-1023.

The fax phone number for the organization where this application or proceeding is assigned is 571-273-8300. Information regarding the status of an application may be obtained from the Patent Application Information Retrieval (PAIR) system. Status information for published applications may be obtained from either Private PAIR or Public PAIR. Status information for unpublished applications is available through private PAIR only. For more information about the PMR system, see her//pair-direct.uspto.gov.

Should you have questions on access to the Private PAIR system, contact the

Electronic Business Center (EBC) at 866-217- 91 97 (toll-free).

/Ernest Unelus/
Primary Examiner
Art Unit 2181

| Notice of References Cited | Application/Control No. 15/257,096 | Applicant(s)/Patent Under Reexamination VOTO ET AL. | |
|---|---|---|---|
| | Examiner ERNEST UNELUS | Art Unit 2181 | Page 1 of 1 |

**U.S. PATENT DOCUMENTS**

| * | | Document Number Country Code-Number-Kind Code | Date MM-YYYY | Name | CPC Classification | US Classification |
|---|---|---|---|---|---|---|
| * | A | US-2011/0208892 A1 | 08-2011 | Meyers; Christopher Michael | G06F13/4226 | 710/313 |
| * | B | US-2011/0208891 A1 | 08-2011 | Meyers; Christopher Michael | G06F13/385 | 710/313 |
| | C | US- | | | | |
| | D | US- | | | | |
| | E | US- | | | | |
| | F | US- | | | | |
| | G | US- | | | | |
| | H | US- | | | | |
| | I | US- | | | | |
| | J | US- | | | | |
| | K | US- | | | | |
| | L | US- | | | | |
| | M | US- | | | | |

**FOREIGN PATENT DOCUMENTS**

| * | | Document Number Country Code-Number-Kind Code | Date MM-YYYY | Country | Name | CPC Classification |
|---|---|---|---|---|---|---|
| | N | | | | | |
| | O | | | | | |
| | P | | | | | |
| | Q | | | | | |
| | R | | | | | |
| | S | | | | | |
| | T | | | | | |

**NON-PATENT DOCUMENTS**

| * | | Include as applicable: Author, Title Date, Publisher, Edition or Volume, Pertinent Pages) |
|---|---|---|
| | U | |
| | V | |
| | W | |
| | X | |

*A copy of this reference is not being furnished with this Office action. (See MPEP § 707.05(a).)
Dates in MM-YYYY format are publication dates. Classifications may be US or foreign.



**Microchip Ex. 1006, p. 133**
**Microchip v. Aptiv**
**IPR2024-00495**

| Index of Claims | Application/Control No. | Applicant(s)/Patent Under Reexamination |
|---|---|---|
| | 15257096 | VOTO ET AL. |
| | **Examiner** | **Art Unit** |
| | ERNEST UNELUS | 2181 |

| | | | | | | | |
|---|---|---|---|---|---|---|---|
| ✓ | Rejected | - | Cancelled | N | Non-Elected | A | Appeal |
| = | Allowed | ÷ | Restricted | I | Interference | O | Objected |

☐ Claims renumbered in the same order as presented by applicant ☐ CPA ☐ T.D. ☐ R.1.47

| CLAIM | | DATE | | | | | | | | |
|---|---|---|---|---|---|---|---|---|---|---|
| Final | Original | 10/31/2016 | | | | | | | | |
| | 1 | ✓ | | | | | | | | |
| | 2 | ✓ | | | | | | | | |
| | 3 | ✓ | | | | | | | | |
| | 4 | ✓ | | | | | | | | |
| | 5 | ✓ | | | | | | | | |
| | 6 | ✓ | | | | | | | | |
| | 7 | ✓ | | | | | | | | |
| | 8 | ✓ | | | | | | | | |
| | 9 | ✓ | | | | | | | | |
| | 10 | ✓ | | | | | | | | |
| | 11 | ✓ | | | | | | | | |
| | 12 | ✓ | | | | | | | | |
| | 13 | ✓ | | | | | | | | |
| | 14 | ✓ | | | | | | | | |
| | 15 | ✓ | | | | | | | | |
| | 16 | ✓ | | | | | | | | |
| | 17 | ✓ | | | | | | | | |
| | 18 | ✓ | | | | | | | | |
| | 19 | ✓ | | | | | | | | |



Microchip Ex. 1006, p. 134
Microchip v. Aptiv
IPR2024-00495

**EAST Search History**

**EAST Search History (Prior Art)**

| Ref # | Hits | Search Query | DBs | Default Operator | Plurals | Time Stamp |
|---|---|---|---|---|---|---|
| L2 | 30 | usb with (downstream or upstream or plurality or multiple or second or another) with (port or plug interface) with (hub or adapt$3) and bypass$4 with (host or master or initiat$3 or slave) with (peripheral or device or port or plug interface) and (host or master or slave) near5 (initiat$4 or respond$3 or repl$4) | US-PGPUB; USPAT; USOCR; FPRS; EPO; JPO; DERWENT; IBM_TDB | OR | ON | 2016/10/13 21:38 |
| L3 | 21 | usb with (peripheral or device) and usb with (plurality or multiple or second or another) with (port or plug interface) with (adapt$3 or hub) and (rout$3 or switch$4) with (port or plug interface) and (bypass$3 or bridg$3) and G06F2213/0042.cpc. | US-PGPUB; USPAT; USOCR; FPRS; EPO; JPO; DERWENT; IBM_TDB | OR | ON | 2016/10/13 21:50 |
| L4 | 24 | usb with (peripheral or device) and usb with (plurality or multiple or second or another) with (port or plug interface) with (adapt$3 or hub) and (rout$3 or switch$4) with (port or plug interface) and (bypass$3 or bridg$3) and G06F13/4022.cpc. | US-PGPUB; USPAT; USOCR; FPRS; EPO; JPO; DERWENT; IBM_TDB | OR | ON | 2016/10/13 21:51 |
| L5 | 45 | usb with (peripheral or device) and usb with (plurality or multiple or second or another) with (port or plug interface) with (adapt$3 or hub) and (rout$3 or switch$4) with (port or plug interface) and (bypass$3 or bridg$3) and G06F13/385.cpc. | US-PGPUB; USPAT; USOCR; FPRS; EPO; JPO; DERWENT; IBM_TDB | OR | ON | 2016/10/13 21:51 |
| L6 | 72 | usb with (peripheral or device) and usb with (plurality or multiple or second or another) with (port or plug interface) with (adapt$3 or hub) and (rout$3 or switch$4) with (port or plug interface) and (bypass$3 or bridg$3) and G06F13/366,4068,4282,4027,385,4022.cpc. | US-PGPUB; USPAT; USOCR; FPRS; EPO; JPO; DERWENT; IBM_TDB | OR | ON | 2016/10/13 21:52 |
| L7 | 38 | usb with (peripheral or device) and usb with (plurality or multiple or second or another) with (port or plug interface) with (adapt$3 or hub) and (rout$3 or switch$4) with (port or plug interface) and (bypass$3 or bridg$3) with (host or master or slave) and G06F13/366,4068,4282,4027,385,4022.cpc. | US-PGPUB; USPAT; USOCR; FPRS; EPO; JPO; DERWENT; IBM_TDB | OR | ON | 2016/10/13 21:52 |
| L8 | 20 | usb with (peripheral or device) and usb with (plurality or multiple or second or another) with (port or plug interface) with (adapt$3 or hub) and (rout$3 or switch$4) with (port or plug interface) and (bypass$3 or bridg$3) with (host or master or slave) and G06F13/366,4068,4282,4027,385,4022.cpc. and (host or master or slave) with (initiate or initiated or initiating) | US-PGPUB; USPAT; USOCR; FPRS; EPO; JPO; DERWENT; IBM_TDB | OR | ON | 2016/10/13 22:07 |

| | | | | | | |
|---|---|---|---|---|---|---|
| L9 | 20 | usb with (peripheral or device) and usb with (plurality or multiple or second or another) with (port or plug interface) with (adapt$3 or hub) and (rout$3 or switch$4) with (port or plug interface) and (bypass$3 or bridg$3) with (host or master or slave) and G06F13/387,366,4068,4282,4027,385,4022,4045.cpc. and (host or master or slave) with (initiate or initiated or initiating) | US-PGPUB; USPAT; USOCR; FPRS; EPO; JPO; DERWENT; IBM_TDB | OR | ON | 2016/10/13 22:23 |
| L10 | 0 | 9 not 8 | US-PGPUB; USPAT; USOCR; FPRS; EPO; JPO; DERWENT; IBM_TDB | OR | ON | 2016/10/13 22:24 |
| L11 | 7 | usb with (peripheral or device) and usb with (plurality or multiple or second or another) with (port or plug interface) with (adapt$3 or hub) and (rout$3 or switch$4) with (port or plug interface) and (bypass$3 or bridg$3) with (host or master or slave) and G06F13/4022,4045.cpc. and (host or master or slave) with (initiate or initiated or initiating) | US-PGPUB; USPAT; USOCR; FPRS; EPO; JPO; DERWENT; IBM_TDB | OR | ON | 2016/10/13 22:24 |
| L12 | 1463 | G06F13/4045.cpc. | US-PGPUB; USPAT; USOCR; FPRS; EPO; JPO; DERWENT; IBM_TDB | OR | ON | 2016/10/13 22:24 |
| L13 | 8217 | G06F13/4022.cpc. | US-PGPUB; USPAT; USOCR; FPRS; EPO; JPO; DERWENT; IBM_TDB | OR | ON | 2016/10/13 22:24 |
| L14 | 23 | usb with (peripheral or device) and usb with (plurality or multiple or second or another) with (port or plug interface) with (adapt$3 or hub) and (rout$3 or switch$4) with (port or plug interface) and (bypass$3 or bridg$3) with (host or master or slave) and 710/$.ccls. and (host or master or slave) with (initiate or initiated or initiating) | US-PGPUB; USPAT; USOCR; FPRS; EPO; JPO; DERWENT; IBM_TDB | OR | ON | 2016/10/13 22:25 |
| L15 | 11 | usb with (peripheral or device) and usb with (plurality or multiple or second or another) with (port or plug interface) with (adapt$3 or hub) and (rout$3 or switch$4) with (port or plug interface) and (bypass$3 or bridg$3) with (host or master or slave) and 710/15,305,313.ccls. and (host or master or slave) with (initiate or initiated or initiating) | US-PGPUB; USPAT; USOCR; FPRS; EPO; JPO; DERWENT; IBM_TDB | OR | ON | 2016/10/13 22:26 |
| L16 | 28 | Shyambabu Yeda.in. or Robert Voto.in. or Craig Petku.in. | US-PGPUB; USPAT; USOCR; FPRS; EPO; JPO; DERWENT; IBM_TDB | NEAR | ON | 2016/10/13 22:27 |
| L17 | 3 | 16 and (vehicle or automobile or car) with usb with (peripheral or device) and bridge | US-PGPUB; USPAT; USOCR; FPRS; | OR | ON | 2016/10/13 22:27 |

| | | | | | | |
|---|---|---|---|---|---|---|
| | | | EPO; JPO; DERWENT; IBM_TDB | | | |
| L18 | 15295 | G06F13/385.cpc. | US-PGPUB; USPAT; USOCR; FPRS; EPO; JPO; DERWENT; IBM_TDB | OR | ON | 2016/10/13 22:29 |
| S65 | 171 | usb with (peripheral or device) and usb with (downstream or upstream or plurality or multiple or second or another) with (port or plug interface) and hub with (hub or adapt$3) and bypass$4 with (host or master or initiat$3) | US-PGPUB; USPAT; USOCR; FPRS; EPO; JPO; DERWENT; IBM_TDB | OR | ON | 2016/10/13 12:41 |
| S66 | 173 | usb with (peripheral or device) and usb with (downstream or upstream or plurality or multiple or second or another) with (port or plug interface) and hub with (hub or adapt$3) and bypass$4 with (host or master or initiat$3 or slave) | US-PGPUB; USPAT; USOCR; FPRS; EPO; JPO; DERWENT; IBM_TDB | OR | ON | 2016/10/13 12:41 |
| S67 | 55 | usb with (peripheral or device) and usb with (downstream or upstream or plurality or multiple or second or another) with (port or plug interface) and hub with (hub or adapt$3) and bypass$4 with (host or master or initiat$3 or slave) with (peripheral or device or port or plug interface) | US-PGPUB; USPAT; USOCR; FPRS; EPO; JPO; DERWENT; IBM_TDB | OR | ON | 2016/10/13 12:48 |
| S68 | 44 | usb with (downstream or upstream or plurality or multiple or second or another) with (port or plug interface) with (hub or adapt$3) and bypass$4 with (host or master or initiat$3 or slave) with (peripheral or device or port or plug interface) | US-PGPUB; USPAT; USOCR; FPRS; EPO; JPO; DERWENT; IBM_TDB | OR | ON | 2016/10/13 13:58 |
| S69 | 30 | usb with (downstream or upstream or plurality or multiple or second or another) with (port or plug interface) with (hub or adapt$3) and bypass$4 with (host or master or initiat$3 or slave) with (peripheral or device or port or plug interface) and (host or master or slave) near5 (initiat$4 or respond$3 or repl$4) | US-PGPUB; USPAT; USOCR; FPRS; EPO; JPO; DERWENT; IBM_TDB | OR | ON | 2016/10/13 14:58 |
| S70 | 0 | ("2016/0132448").URPN. | USPAT | OR | OFF | 2016/10/13 15:04 |

**10/13/2016 10:36:21 PM**
**C:\Users\eunelus\Documents\EAST\Workspaces\14487947.wsp**



**Microchip Ex. 1006, p. 137**
**Microchip v. Aptiv**
**IPR2024-00495**

| Search Notes | Application/Control No. | Applicant(s)/Patent Under Reexamination |
|---|---|---|
| | 15257096 | VOTO ET AL. |
| | **Examiner** | **Art Unit** |
| | ERNEST UNELUS | 2181 |

| CPC- SEARCHED | | |
|---|---|---|
| **Symbol** | **Date** | **Examiner** |
| G06F 13/4022, 4045, 385, 387, 366, 4068, 4282, 4027 | 10/13/2016 | E.U |

| CPC COMBINATION SETS - SEARCHED | | |
|---|---|---|
| **Symbol** | **Date** | **Examiner** |
| | | |

| US CLASSIFICATION SEARCHED | | | |
|---|---|---|---|
| **Class** | **Subclass** | **Date** | **Examiner** |
| | | | |

| SEARCH NOTES | | |
|---|---|---|
| **Search Notes** | **Date** | **Examiner** |
| EAST search: US-PGPUB; USPAT; USOCR; EPO; JPO; DERWENT | 10/13/2016 | E.U |
| Inventor search utilizing eDAN and EAST | 10/13/2016 | E.U |
| CPC search of G06F 13/4022, 4045, 385, 387, 366, 4068, 4282, 4027 and G06F 2213/0042 | 10/13/2016 | E.U |

| INTERFERENCE SEARCH | | | |
|---|---|---|---|
| **US Class/ CPC Symbol** | **US Subclass / CPC Group** | **Date** | **Examiner** |
| G06F | 13/4022, 4045 | 10/13/2016 | E.U |

| | |
|---|---|
| | |

PTO/SB/08a (01-10)
Approved for use through 07/31/2012. OMB 0651-0031
U.S. Patent and Trademark Office; U.S. DEPARTMENT OF COMMERCE
Under the Paperwork Reduction Act of 1995, no persons are required to respond to a collection of information unless it contains a valid OMB control number.

# INFORMATION DISCLOSURE STATEMENT BY APPLICANT

**( Not for submission under 37 CFR 1.99)**

| | |
|---|---|
| Application Number | 15257096 |
| Filing Date | 2016-09-09 |
| First Named Inventor | Robert M. Voto, et al. |
| Art Unit | 2181 |
| Examiner Name | Ernest Unelus |
| Attorney Docket Number | DP-322037 CIP |

**U.S.PATENTS** Remove

| Examiner Initial* | Cite No | Patent Number | Kind Code[1] | Issue Date | Name of Patentee or Applicant of cited Document | Pages,Columns,Lines where Relevant Passages or Relevant Figures Appear |
|---|---|---|---|---|---|---|
| | 1 | 8447890 | B1 | 2013-05-21 | LeTourneur et al. | |
| | 2 | 8447598 | B2 | 2013-05-21 | Chutorash et al. | |
| | 3 | 7627708 | B2 | 2009-12-01 | Bohm et al. | |
| | 4 | 7523243 | B2 | 2009-04-21 | Bohm et al. | |
| | 5 | 7478191 | B2 | 2009-01-13 | Wurzburg et al. | |
| | 6 | 7280802 | B2 | 2007-10-09 | Grady | |
| | 7 | 7130656 | B2 | 2006-10-31 | Okagaki et al. | |
| | 8 | 6957287 | B2 | 2005-10-18 | Lou et al. | |



ALL REFERENCES CONSIDERED EXCEPT WHERE LINED THROUGH. /E.U./

| INFORMATION DISCLOSURE STATEMENT BY APPLICANT ( Not for submission under 37 CFR 1.99) | Application Number | 15257096 |
|---|---|---|
| | Filing Date | 2016-09-09 |
| | First Named Inventor | Robert M. Voto, et al. |
| | Art Unit | 2181 |
| | Examiner Name | Ernest Unelus |
| | Attorney Docket Number | DP-322037 CIP |

| | | | | | | |
|---|---|---|---|---|---|---|
| | 9 | 6934793 | B2 | 2005-08-23 | Ying et al. | |
| | 10 | 6732219 | B1 | 2004-05-04 | Broyles | |
| | 11 | 6073188 | A | 2000-06-06 | FLEMING SCOTT M | |

If you wish to add additional U.S. Patent citation information please click the Add button. Add

**U.S.PATENT APPLICATION PUBLICATIONS** Remove

| Examiner Initial* | Cite No | Publication Number | Kind Code[1] | Publication Date | Name of Patentee or Applicant of cited Document | Pages,Columns,Lines where Relevant Passages or Relevant Figures Appear |
|---|---|---|---|---|---|---|
| | 1 | 20130106750 | A1 | 2013-05-02 | Kurosawa | |
| | 2 | 20130053003 | A1 | 2013-02-28 | King, II | |
| | 3 | 20120290859 | A1 | 2012-11-15 | Saladin et al. | |
| | 4 | 20120191811 | A1 | 2012-07-26 | Ng et al. | |
| | 5 | 20120134506 | A1 | 2012-05-31 | DeBiasio et al. | |
| | 6 | 20110124300 | A1 | 2011-05-26 | Sinai | |



ALL REFERENCES CONSIDERED EXCEPT WHERE LINED THROUGH. /E.U./

| INFORMATION DISCLOSURE STATEMENT BY APPLICANT ( Not for submission under 37 CFR 1.99) | | |
|---|---|---|
| | Application Number | 15257096 |
| | Filing Date | 2016-09-09 |
| | First Named Inventor | Robert M. Voto, et al. |
| | Art Unit | 2181 |
| | Examiner Name | Ernest Unelus |
| | Attorney Docket Number | DP-322037 CIP |

| | | | | | | | |
|---|---|---|---|---|---|---|---|
| | 7 | 20110054721 | A1 | 2011-03-03 | Goodrich et al. | | |
| | 8 | 20090117890 | A1 | 2009-05-07 | Jacobsen et al. | | |
| | 9 | 20080005262 | A1 | 2008-01-03 | Wurzburg et al. | | |
| | 10 | 20070156293 | A1 | 2007-07-05 | Kellzi et al. | | |
| | 11 | 20070086724 | A1 | 2007-04-19 | Grady et al. | | |
| | 12 | 20070067553 | A1 | 2007-03-22 | Chang | | |
| | 13 | 20060056401 | A1 | 2006-03-16 | Bohm et al. | | |
| | 14 | 20030167345 | A1 | 2003-09-04 | Knight et al. | | |

If you wish to add additional U.S. Published Application citation information please click the Add button. Add

**FOREIGN PATENT DOCUMENTS** Remove

| Examiner Initial* | Cite No | Foreign Document Number[3] | Country Code[2] i | Kind Code[4] | Publication Date | Name of Patentee or Applicant of cited Document | Pages,Columns,Lines where Relevant Passages or Relevant Figures Appear | T[5] |
|---|---|---|---|---|---|---|---|---|
| | 1 | 2003256351 | JP | A | 2003-09-12 | FURUKAWA TADAO | | |

EFS Web 2.1.17

ALL REFERENCES CONSIDERED EXCEPT WHERE LINED THROUGH. /E.U./

| INFORMATION DISCLOSURE STATEMENT BY APPLICANT ( Not for submission under 37 CFR 1.99) | Application Number | 15257096 |
|---|---|---|
| | Filing Date | 2016-09-09 |
| | First Named Inventor | Robert M. Voto, et al. |
| | Art Unit | 2181 |
| | Examiner Name | Ernest Unelus |
| | Attorney Docket Number | DP-322037 CIP |

| | | | | | | | | |
|---|---|---|---|---|---|---|---|---|
| | 2 | 470887 | TW | B | 2002-01-01 | JANG | | |

If you wish to add additional Foreign Patent Document citation information please click the Add button Add

**NON-PATENT LITERATURE DOCUMENTS** Remove

| Examiner Initials* | Cite No | Include name of the author (in CAPITAL LETTERS), title of the article (when appropriate), title of the item (book, magazine, journal, serial, symposium, catalog, etc), date, pages(s), volume-issue number(s), publisher, city and/or country where published. | T[5] |
|---|---|---|---|
| | 1 | "FFI Rapport-A STUDY OF COMPUTER INTERFACES FOR SOLDIER SYSTEMS", Lars Erik Olsen & Joakin Flathagen, Norwegian Defence Research Establishment, October 10, 2005 | |
| | 2 | "USB 2.0 Autoswitch User's Manual", Lindy Electronics Limited & Lindy-Elektronic GMBH, September 2002 | |
| | 3 | "APC USB 2.0 Host Controller - Device Driver Download", http://www.liutilities.com/devicedriver/apcusb20hostcontroller/, July 2002 | |
| | 4 | "Peripheral-Sharing Hardware Suits Education's Needs to a 'T'", Terian Tyre, T H E Journal (Technological Horizons In Education), October 1988 | |

If you wish to add additional non-patent literature document citation information please click the Add button Add

**EXAMINER SIGNATURE**

| Examiner Signature | /Ernest Unelus/ | Date Considered | 10/31/2016 |
|---|---|---|---|

*EXAMINER: Initial if reference considered, whether or not citation is in conformance with MPEP 609. Draw line through a citation if not in conformance and not considered. Include copy of this form with next communication to applicant.

[1] See Kind Codes of USPTO Patent Documents at www.USPTO.GOV or MPEP 901.04. [2] Enter office that issued the document, by the two-letter code (WIPO Standard ST.3). [3] For Japanese patent documents, the indication of the year of the reign of the Emperor must precede the serial number of the patent document. [4] Kind of document by the appropriate symbols as indicated on the document under WIPO Standard ST.16 if possible. [5] Applicant is to place a check mark here if English language translation is attached.



ALL REFERENCES CONSIDERED EXCEPT WHERE LINED THROUGH. /E.U./

| INFORMATION DISCLOSURE STATEMENT BY APPLICANT ( Not for submission under 37 CFR 1.99) | Application Number | 15257096 |
|---|---|---|
| | Filing Date | 2016-09-09 |
| | First Named Inventor | Robert M. Voto, et al. |
| | Art Unit | 2181 |
| | Examiner Name | Ernest Unelus |
| | Attorney Docket Number | DP-322037 CIP |

**CERTIFICATION STATEMENT**

Please see 37 CFR 1.97 and 1.98 to make the appropriate selection(s):

That each item of information contained in the information disclosure statement was first cited in any communication from a foreign patent office in a counterpart foreign application not more than three months prior to the filing of the information disclosure statement. See 37 CFR 1.97(e)(1).

**OR**

☒ That no item of information contained in the information disclosure statement was cited in a communication from a foreign patent office in a counterpart foreign application, and, to the knowledge of the person signing the certification after making reasonable inquiry, no item of information contained in the information disclosure statement was known to any individual designated in 37 CFR 1.56(c) more than three months prior to the filing of the information disclosure statement. See 37 CFR 1.97(e)(2).

See attached certification statement.

The fee set forth in 37 CFR 1.17 (p) has been submitted herewith.

A certification statement is not submitted herewith.

**SIGNATURE**

A signature of the applicant or representative is required in accordance with CFR 1.33, 10.18. Please see CFR 1.4(d) for the form of the signature.

| Signature | /Robert J. Myers/ | Date (YYYY-MM-DD) | 2016-10-24 |
|---|---|---|---|
| Name/Print | Robert J. Myers | Registration Number | 69,783 |

This collection of information is required by 37 CFR 1.97 and 1.98. The information is required to obtain or retain a benefit by the public which is to file (and by the USPTO to process) an application. Confidentiality is governed by 35 U.S.C. 122 and 37 CFR 1.14. This collection is estimated to take 1 hour to complete, including gathering, preparing and submitting the completed application form to the USPTO. Time will vary depending upon the individual case. Any comments on the amount of time you require to complete this form and/or suggestions for reducing this burden, should be sent to the Chief Information Officer, U.S. Patent and Trademark Office, U.S. Department of Commerce, P.O. Box 1450, Alexandria, VA 22313-1450. DO NOT SEND FEES OR COMPLETED FORMS TO THIS ADDRESS. **SEND TO: Commissioner for Patents, P.O. Box 1450, Alexandria, VA 22313-1450.**



ALL REFERENCES CONSIDERED EXCEPT WHERE LINED THROUGH. /E.U./

## Privacy Act Statement

The Privacy Act of 1974 (P.L. 93-579) requires that you be given certain information in connection with your submission of the attached form related to a patent application or patent. Accordingly, pursuant to the requirements of the Act, please be advised that: (1) the general authority for the collection of this information is 35 U.S.C. 2(b)(2); (2) furnishing of the information solicited is voluntary; and (3) the principal purpose for which the information is used by the U.S. Patent and Trademark Office is to process and/or examine your submission related to a patent application or patent. If you do not furnish the requested information, the U.S. Patent and Trademark Office may not be able to process and/or examine your submission, which may result in termination of proceedings or abandonment of the application or expiration of the patent.

The information provided by you in this form will be subject to the following routine uses:

1. The information on this form will be treated confidentially to the extent allowed under the Freedom of Information Act (5 U.S.C. 552) and the Privacy Act (5 U.S.C. 552a). Records from this system of records may be disclosed to the Department of Justice to determine whether the Freedom of Information Act requires disclosure of these record s.

2. A record from this system of records may be disclosed, as a routine use, in the course of presenting evidence to a court, magistrate, or administrative tribunal, including disclosures to opposing counsel in the course of settlement negotiations.

3. A record in this system of records may be disclosed, as a routine use, to a Member of Congress submitting a request involving an individual, to whom the record pertains, when the individual has requested assistance from the Member with respect to the subject matter of the record.

4. A record in this system of records may be disclosed, as a routine use, to a contractor of the Agency having need for the information in order to perform a contract. Recipients of information shall be required to comply with the requirements of the Privacy Act of 1974, as amended, pursuant to 5 U.S.C. 552a(m).

5. A record related to an International Application filed under the Patent Cooperation Treaty in this system of records may be disclosed, as a routine use, to the International Bureau of the World Intellectual Property Organization, pursuant to the Patent Cooperation Treaty.

6. A record in this system of records may be disclosed, as a routine use, to another federal agency for purposes of National Security review (35 U.S.C. 181) and for review pursuant to the Atomic Energy Act (42 U.S.C. 218(c)).

7. A record from this system of records may be disclosed, as a routine use, to the Administrator, General Services, or his/her designee, during an inspection of records conducted by GSA as part of that agency's responsibility to recommend improvements in records management practices and programs, under authority of 44 U.S.C. 2904 and 2906. Such disclosure shall be made in accordance with the GSA regulations governing inspection of records for this purpose, and any other relevant (i.e., GSA or Commerce) directive. Such disclosure shall not be used to make determinations about individuals.

8. A record from this system of records may be disclosed, as a routine use, to the public after either publication of the application pursuant to 35 U.S.C. 122(b) or issuance of a patent pursuant to 35 U.S.C. 151. Further, a record may be disclosed, subject to the limitations of 37 CFR 1.14, as a routine use, to the public if the record was filed in an application which became abandoned or in which the proceedings were terminated and which application is referenced by either a published application, an application open to public inspections or an issued patent.

9. A record from this system of records may be disclosed, as a routine use, to a Federal, State, or local law enforcement agency, if the USPTO becomes aware of a violation or potential violation of law or regulation.



ALL REFERENCES CONSIDERED EXCEPT WHERE LINED THROUGH. /E.U./

UNITED STATES PATENT AND TRADEMARK OFFICE

UNITED STATES DEPARTMENT OF COMMERCE
United States Patent and Trademark Office
Address: COMMISSIONER FOR PATENTS
P.O. Box 1450
Alexandria, Virginia 22313-1450
www.uspto.gov

| APPLICATION NUMBER | FILING OR 371(C) DATE | FIRST NAMED APPLICANT | ATTY. DOCKET NO./TITLE |
|---|---|---|---|
| 15/257,096 | 09/06/2016 | Robert M. Voto | DP-322037 CIP |

**CONFIRMATION NO. 3519**

22851
Delphi Technologies, Inc.
P.O. Box 5052
M/C 483-400-402
Troy, MI 48007-5052

**POA ACCEPTANCE LETTER**

*OC000000087008928*

Date Mailed: 11/07/2016

## NOTICE OF ACCEPTANCE OF POWER OF ATTORNEY

This is in response to the Power of Attorney filed 10/28/2016.

The Power of Attorney in this application is accepted. Correspondence in this application will be mailed to the above address as provided by 37 CFR 1.33.

Questions about the contents of this notice and the requirements it sets forth should be directed to the Office of Data Management, Application Assistance Unit, at **(571) 272-4000** or **(571) 272-4200** or **1-888-786-0101**.

/mnguyen/



**Microchip Ex. 1006, p. 145**
**Microchip v. Aptiv**
**IPR2024-00495**

PTO/SB/26 (08-08)
Approved for use through 09/30/2008. OMB 0651-0031
U.S. Patent and Trademark Office; U.S. DEPARTMENT OF COMMERCE
Under the Paperwork Reduction Act of 1995, no persons are required to respond to a collection of information unless it displays a valid OMB control number.

| TERMINAL DISCLAIMER TO OBVIATE A DOUBLE PATENTING REJECTION OVER A "PRIOR" PATENT | Docket Number (Optional) DP-322037 CIP |
|---|---|

In re Application of: Robert M. Voto

Application No.: 15/257,096

Filed: 09-06-2016

For: FLEXIBLE MOBILE DEVICE CONNECTIVITY TO AUTOMOTIVE SYSTEMS WITH USB HUBS

The owner*, Delphi Technologies, Inc., of 100 percent interest in the instant application hereby disclaims, except as provided below, the terminal part of the statutory term of any patent granted on the instant application which would extend beyond the expiration date of the full statutory term **prior patent** No. 9,460,037 as the term of said prior patent is defined in 35 U.S.C. 154 and 173, and as the term of said **prior patent** is presently shortened by any terminal disclaimer. The owner hereby agrees that any patent so granted on the instant application shall be enforceable only for and during such period that it and the **prior patent** are commonly owned. This agreement runs with any patent granted on the instant application and is binding upon the grantee, its successors or assigns.

In making the above disclaimer, the owner does not disclaim the terminal part of the term of any patent granted on the instant application that would extend to the expiration date of the full statutory term as defined in 35 U.S.C. 154 and 173 of the **prior patent**, "as the term of said **prior patent** is presently shortened by any terminal disclaimer," in the event that said **prior patent** later:

expires for failure to pay a maintenance fee;
is held unenforceable;
is found invalid by a court of competent jurisdiction;
is statutorily disclaimed in whole or terminally disclaimed under 37 CFR 1.321;
has all claims canceled by a reexamination certificate;
is reissued; or
is in any manner terminated prior to the expiration of its full statutory term as presently shortened by any terminal disclaimer.

Check either box 1 or 2 below, if appropriate.

1. ☐ For submissions on behalf of a business/organization (e.g., corporation, partnership, university, government agency, etc.), the undersigned is empowered to act on behalf of the business/organization.

I hereby declare that all statements made herein of my own knowledge are true and that all statements made on information and belief are believed to be true; and further that these statements were made with the knowledge that willful false statements and the like so made are punishable by fine or imprisonment, or both, under Section 1001 of Title 18 of the United States Code and that such willful false statements may jeopardize the validity of the application or any patent issued thereon.

2. ☑ The undersigned is an attorney or agent of record. Reg. No. 69,783

/Robert J. Myers/ — Signature
11-07-2016 — Date

Robert J. Myers
Typed or printed name

248-813-2512
Telephone Number

☐ Terminal disclaimer fee under 37 CFR 1.20(d) included.

**WARNING: Information on this form may become public. Credit card information should not be included on this form. Provide credit card information and authorization on PTO-2038.**

*Statement under 37 CFR 3.73(b) is required if terminal disclaimer is signed by the assignee (owner).
Form PTO/SB/96 may be used for making this certification. See MPEP § 324.

This collection of information is required by 37 CFR 1.321. The information is required to obtain or retain a benefit by the public which is to file (and by the USPTO to process) an application. Confidentiality is governed by 35 U.S.C. 122 and 37 CFR 1.11 and 1.14. This collection is estimated to take 12 minutes to complete, including gathering, preparing, and submitting the completed application form to the USPTO. Time will vary depending upon the individual case. Any comments on the amount of time you require to complete this form and/or suggestions for reducing this burden, should be sent to the Chief Information Officer, U.S. Patent and Trademark Office, U.S. Department of Commerce, P.O. Box 1450, Alexandria, VA 22313-1450. DO NOT SEND FEES OR COMPLETED FORMS TO THIS ADDRESS. **SEND TO: Commissioner for Patents, P.O. Box 1450, Alexandria, VA 22313-1450.**

If you need assistance in completing the form, call 1-800-PTO-9199 and select option 2.

# Privacy Act Statement

The **Privacy Act of 1974 (P.L. 93-579)** requires that you be given certain information in connection with your submission of the attached form related to a patent application or patent. Accordingly, pursuant to the requirements of the Act, please be advised that: (1) the general authority for the collection of this information is 35 U.S.C. 2(b)(2); (2) furnishing of the information solicited is voluntary; and (3) the principal purpose for which the information is used by the U.S. Patent and Trademark Office is to process and/or examine your submission related to a patent application or patent. If you do not furnish the requested information, the U.S. Patent and Trademark Office may not be able to process and/or examine your submission, which may result in termination of proceedings or abandonment of the application or expiration of the patent.

The information provided by you in this form will be subject to the following routine uses:

1. The information on this form will be treated confidentially to the extent allowed under the Freedom of Information Act (5 U.S.C. 552) and the Privacy Act (5 U.S.C 552a). Records from this system of records may be disclosed to the Department of Justice to determine whether disclosure of these records is required by the Freedom of Information Act.
2. A record from this system of records may be disclosed, as a routine use, in the course of presenting evidence to a court, magistrate, or administrative tribunal, including disclosures to opposing counsel in the course of settlement negotiations.
3. A record in this system of records may be disclosed, as a routine use, to a Member of Congress submitting a request involving an individual, to whom the record pertains, when the individual has requested assistance from the Member with respect to the subject matter of the record.
4. A record in this system of records may be disclosed, as a routine use, to a contractor of the Agency having need for the information in order to perform a contract. Recipients of information shall be required to comply with the requirements of the Privacy Act of 1974, as amended, pursuant to 5 U.S.C. 552a(m).
5. A record related to an International Application filed under the Patent Cooperation Treaty in this system of records may be disclosed, as a routine use, to the International Bureau of the World Intellectual Property Organization, pursuant to the Patent Cooperation Treaty.
6. A record in this system of records may be disclosed, as a routine use, to another federal agency for purposes of National Security review (35 U.S.C. 181) and for review pursuant to the Atomic Energy Act (42 U.S.C. 218(c)).
7. A record from this system of records may be disclosed, as a routine use, to the Administrator, General Services, or his/her designee, during an inspection of records conducted by GSA as part of that agency's responsibility to recommend improvements in records management practices and programs, under authority of 44 U.S.C. 2904 and 2906. Such disclosure shall be made in accordance with the GSA regulations governing inspection of records for this purpose, and any other relevant (*i.e.*, GSA or Commerce) directive. Such disclosure shall not be used to make determinations about individuals.
8. A record from this system of records may be disclosed, as a routine use, to the public after either publication of the application pursuant to 35 U.S.C. 122(b) or issuance of a patent pursuant to 35 U.S.C. 151. Further, a record may be disclosed, subject to the limitations of 37 CFR 1.14, as a routine use, to the public if the record was filed in an application which became abandoned or in which the proceedings were terminated and which application is referenced by either a published application, an application open to public inspection or an issued patent.
9. A record from this system of records may be disclosed, as a routine use, to a Federal, State, or local law enforcement agency, if the USPTO becomes aware of a violation or potential violation of law or regulation.

| Application Number | Application/Control No. | Applicant(s)/Patent under Reexamination | |
|---|---|---|---|
| | 15/257,096 | VOTO ET AL. | |
| | | | |

| Document Code - DISQ | Internal Document – DO NOT MAIL |
|---|---|

| TERMINAL DISCLAIMER | ☐ APPROVED | ☒ DISAPPROVED |
|---|---|---|
| Date Filed : 13 October, 2016 | This patent is subject to a Terminal Disclaimer | |

## Approved/Disapproved by:

/CRYSTAL QUEEN/

**Technology Center:** PLRC

**Telephone:**

The person who signed the terminal disclaimer is not the applicant, patentee or an attorney or agent of record. 37 CFR 1.321(a) and (b). (See FP 14.26.08)

(Note: PoA can be given to a customer number, wherein all practitioners listed under the customer number have PoA. given to a list of practitioners by registration number, the list may not comprise more than 10 practitioners or a separate paper signed by a 37 CFR I.33(b) party must be in the record identifying which of the practitioners, up to 10, are recognized as having PoA. If the applicant is a juristic entity (e.g., corporation), a representative of the applicant cannot sign the TD unless it is established that the representative is a party authorized to act on behalf of the applicant.)

Also resubmit Td with this paper, NO FEE is required.

# Electronic Acknowledgement Receipt

| | |
|---|---|
| **EFS ID:** | 27432993 |
| **Application Number:** | 15257096 |
| **International Application Number:** | |
| **Confirmation Number:** | 3519 |
| **Title of Invention:** | FLEXIBLE MOBILE DEVICE CONNECTIVITY TO AUTOMOTIVE SYSTEMS WITH USB HUBS |
| **First Named Inventor/Applicant Name:** | Robert M. Voto |
| **Customer Number:** | 22851 |
| **Filer:** | Lawrence Dean Hazelton/Kandace Powell |
| **Filer Authorized By:** | Lawrence Dean Hazelton |
| **Attorney Docket Number:** | DP-322037 CIP |
| **Receipt Date:** | 07-NOV-2016 |
| **Filing Date:** | 06-SEP-2016 |
| **Time Stamp:** | 12:32:33 |
| **Application Type:** | Utility under 35 USC 111(a) |

## Payment information:

| | |
|---|---|
| Submitted with Payment | no |

## File Listing:

| Document Number | Document Description | File Name | File Size(Bytes)/ Message Digest | Multi Part /.zip | Pages (if appl.) |
|---|---|---|---|---|---|
| 1 | Amendment/Req. Reconsideration-After Non-Final Reject | DP322037_CIP_OA_Reply_04NO16.pdf | 21891<br>2dccf50cfa6c56b31100230a82ad0485b7337aa2 | no | 3 |

**Warnings:**

| Information: | | | | | |
|---|---|---|---|---|---|
| 2 | Terminal Disclaimer Filed | DP-322037_CIP_sb0026.pdf | 186714<br>65433256c439cf8d922a88b974962af0d95d8d27 | no | 3 |
| Warnings: | | | | | |
| Information: | | | | | |
| | | | Total Files Size (in bytes): | 208605 | |

**This Acknowledgement Receipt evidences receipt on the noted date by the USPTO of the indicated documents, characterized by the applicant, and including page counts, where applicable. It serves as evidence of receipt similar to a Post Card, as described in MPEP 503.**

**New Applications Under 35 U.S.C. 111**
**If a new application is being filed and the application includes the necessary components for a filing date (see 37 CFR 1.53(b)-(d) and MPEP 506), a Filing Receipt (37 CFR 1.54) will be issued in due course and the date shown on this Acknowledgement Receipt will establish the filing date of the application.**

**National Stage of an International Application under 35 U.S.C. 371**
**If a timely submission to enter the national stage of an international application is compliant with the conditions of 35 U.S.C. 371 and other applicable requirements a Form PCT/DO/EO/903 indicating acceptance of the application as a national stage submission under 35 U.S.C. 371 will be issued in addition to the Filing Receipt, in due course.**

**New International Application Filed with the USPTO as a Receiving Office**
**If a new international application is being filed and the international application includes the necessary components for an international filing date (see PCT Article 11 and MPEP 1810), a Notification of the International Application Number and of the International Filing Date (Form PCT/RO/105) will be issued in due course, subject to prescriptions concerning national security, and the date shown on this Acknowledgement Receipt will establish the international filing date of the application.**

**IN THE UNITED STATES PATENT AND TRADEMARK OFFICE**

| | | | |
|---|---|---|---|
| Appl. No. | : | 15/257,096 | Confirmation No. 3519 |
| Applicant | : | Delphi Technologies, Inc. | |
| Inventors | : | Robert Voto, et al. | |
| Filed | : | 09/06/2016 | |
| TC/AU | : | 2181 | |
| Examiner | : | Ernest Unelus | |
| Docket No. | : | DP-322037 CIP (formerly 40651-163154) | |
| Title | : | Flexible Mobile Device Connectivity to Automotive Systems with USB Hubs | |

**RESPONSE UNDER 37 CFR § 1.111**

Dear Examiner Unelus:

This paper is in response to the non-final office action mailed on November 4, 2016 for the above referenced application. Please consider the remarks and arguments presented herein.


I. Remarks and Arguments Page 2

II. Conclusion Page 3

## REMARKS AND ARGUMENTS

**Claim Rejections based on Non-Statutory Double Patenting**

Claims 1-19 stand rejected based on the grounds on non-statutory double patenting over claims 1-17 of U.S. Patent No. 9,460,037.

In response to the rejection, Applicant is submitting a TERMINAL DISCLAIMER TO OBVIATE A DOUBLE PATENTING REJECTION OVER A "PRIOR" PATENT (Form PTO/SB/26) in accordance with 37 CFR §1.321(c) concurrently with the filing of this paper. Accordingly, Applicant respectfully requests that the rejection of claims 1-19 be reconsidered and withdrawn and that the claims be allowed.



**Microchip Ex. 1006, p. 152**
**Microchip v. Aptiv**
**IPR2024-00495**

## CONCLUSION

It is believed that only allowable claims remain in the application. Applicant respectfully requests that a timely Notice of Allowance be issued in this case.

If it would further prosecution of the application, the Examiner is urged to contact the undersigned at the phone number provided.

The Commissioner is hereby authorized to charge any fees associated with this communication and/or credit any overpayments to Delphi Technologies, Inc., Deposit Account No. 50-0831.

Respectfully submitted,

/Robert J. Myers/

Robert J. Myers
Reg. No. 69,783
Delphi Technologies, Inc.
Legal Staff – M/C 483-400-402
P.O. Box 5052
Troy, Michigan 48007-5052
(248) 813-2512
bob.myers@delphi.com



**Microchip Ex. 1006, p. 153**
**Microchip v. Aptiv**
**IPR2024-00495**

UNITED STATES PATENT AND TRADEMARK OFFICE

UNITED STATES DEPARTMENT OF COMMERCE
United States Patent and Trademark Office
Address: COMMISSIONER FOR PATENTS
P.O. Box 1450
Alexandria, Virginia 22313-1450
www.uspto.gov

| APPLICATION NUMBER | FILING OR 371(C) DATE | FIRST NAMED APPLICANT | ATTY. DOCKET NO./TITLE |
|---|---|---|---|
| 15/257,096 | 09/06/2016 | Robert M. Voto | DP-322037 CIP |

**CONFIRMATION NO. 3519**

22851
Delphi Technologies, Inc.
P.O. Box 5052
M/C 483-400-402
Troy, MI 48007-5052

**PUBLICATION NOTICE**

*OC000000088056928*

**Title:**FLEXIBLE MOBILE DEVICE CONNECTIVITY TO AUTOMOTIVE SYSTEMS WITH USB HUBS

**Publication No.**US-2016-0371213-A1
**Publication Date:**12/22/2016

## NOTICE OF PUBLICATION OF APPLICATION

The above-identified application will be electronically published as a patent application publication pursuant to 37 CFR 1.211, et seq. The patent application publication number and publication date are set forth above.

The publication may be accessed through the USPTO's publically available Searchable Databases via the Internet at www.uspto.gov. The direct link to access the publication is currently http://www.uspto.gov/patft/.

The publication process established by the Office does not provide for mailing a copy of the publication to applicant. A copy of the publication may be obtained from the Office upon payment of the appropriate fee set forth in 37 CFR 1.19(a)(1). Orders for copies of patent application publications are handled by the USPTO's Office of Public Records. The Office of Public Records can be reached by telephone at (571) 272-3150 or (800) 972-6382, by facsimile at (571) 273-3250, by mail addressed to the United States Patent and Trademark Office, Office of Public Records, Alexandria, VA 22313-1450 or via the Internet.

In addition, information on the status of the application, including the mailing date of Office actions and the dates of receipt of correspondence filed in the Office, may also be accessed via the Internet through the Patent Electronic Business Center at www.uspto.gov using the public side of the Patent Application Information and Retrieval (PAIR) system. The direct link to access this status information is currently http://pair.uspto.gov/. Prior to publication, such status information is confidential and may only be obtained by applicant using the private side of PAIR.

Further assistance in electronically accessing the publication, or about PAIR, is available by calling the Patent Electronic Business Center at 1-866-217-9197.

---

Office of Data Managment, Application Assistance Unit (571) 272-4000, or (571) 272-4200, or 1-888-786-0101



**Microchip Ex. 1006, p. 154**
**Microchip v. Aptiv**
**IPR2024-00495**

| Doc Code: DIST.E.FILE<br>Document Description: Electronic Terminal Disclaimer - Filed | PTO/SB/26<br>U.S. Patent and Trademark Office<br>Department of Commerce |
|---|---|

| | |
|---|---|
| Electronic Petition Request | **TERMINAL DISCLAIMER TO OBVIATE A DOUBLE PATENTING REJECTION OVER A "PRIOR" PATENT** |
| Application Number | 15257096 |
| Filing Date | 06-Sep-2016 |
| First Named Inventor | Robert Voto |
| Attorney Docket Number | DP-322037 CIP |
| Title of Invention | FLEXIBLE MOBILE DEVICE CONNECTIVITY TO AUTOMOTIVE SYSTEMS WITH USB HUBS |

☒ Filing of terminal disclaimer does not obviate requirement for response under 37 CFR 1.111 to outstanding Office Action

☒ This electronic Terminal Disclaimer is not being used for a Joint Research Agreement.

| Owner | Percent Interest |
|---|---|
| Delphi Technologies, Inc. | 100% |

The owner(s) with percent interest listed above in the instant application hereby disclaims, except as provided below, the terminal part of the statutory term of any patent granted on the instant application which would extend beyond the expiration date of the full statutory term of prior patent number(s)

9460037

as the term of said prior patent is presently shortened by any terminal disclaimer. The owner hereby agrees that any patent so granted on the instant application shall be enforceable only for and during such period that it and the prior patent are commonly owned. This agreement runs with any patent granted on the instant application and is binding upon the grantee, its successors or assigns.

In making the above disclaimer, the owner does not disclaim the terminal part of the term of any patent granted on the instant application that would extend to the expiration date of the full statutory term of the prior patent, "as the term of said prior patent is presently shortened by any terminal disclaimer," in the event that said prior patent later:
- expires for failure to pay a maintenance fee;
- is held unenforceable;
- is found invalid by a court of competent jurisdiction;
- is statutorily disclaimed in whole or terminally disclaimed under 37 CFR 1.321;
- has all claims canceled by a reexamination certificate;
- is reissued; or
- is in any manner terminated prior to the expiration of its full statutory term as presently shortened by any terminal disclaimer.

◯ Terminal disclaimer fee under 37 CFR 1.20(d) is included with Electronic Terminal Disclaimer request.

| | |
|---|---|
| ◉ I certify, in accordance with 37 CFR 1.4(d)(4), that the terminal disclaimer fee under 37 CFR 1.20(d) required for this terminal disclaimer has already been paid in the above-identified application. | |
| THIS PORTION MUST BE COMPLETED BY THE SIGNATORY OR SIGNATORIES<br><br>I certify, in accordance with 37 CFR 1.4(d)(4) that I am:<br><br>◉ An attorney or agent registered to practice before the Patent and Trademark Office who is of record in this application<br><br>Registration Number 69783<br><br>○ A sole inventor<br><br>○ A joint inventor; I certify that I am authorized to sign this submission on behalf of all of the inventors as evidenced by the power of attorney in the application<br><br>○ A joint inventor; all of whom are signing this request | |
| Signature | /Robert J. Myers/ |
| Name | Robert J. Myers |

*Statement under 37 CFR 3.73(b) is required if terminal disclaimer is signed by the assignee (owner).
Form PTO/SB/96 may be used for making this certification. See MPEP § 324.

Doc Code: DISQ.E.FILE
Document Description: Electronic Terminal Disclaimer – Approved

Application No.: 15257096

Filing Date: 06-Sep-2016

Applicant/Patent under Reexamination: Voto

Electronic Terminal Disclaimer filed on January 3, 2017

☒ APPROVED

**This patent is subject to a terminal disclaimer**

☐ DISAPPROVED

Approved/Disapproved by: Electronic Terminal Disclaimer automatically approved by EFS-Web

U.S. Patent and Trademark Office

# Electronic Acknowledgement Receipt

| | |
|---|---|
| **EFS ID:** | 27947938 |
| **Application Number:** | 15257096 |
| **International Application Number:** | |
| **Confirmation Number:** | 3519 |
| **Title of Invention:** | FLEXIBLE MOBILE DEVICE CONNECTIVITY TO AUTOMOTIVE SYSTEMS WITH USB HUBS |
| **First Named Inventor/Applicant Name:** | Robert M. Voto |
| **Customer Number:** | 22851 |
| **Filer:** | Robert James Myers |
| **Filer Authorized By:** | |
| **Attorney Docket Number:** | DP-322037 CIP |
| **Receipt Date:** | 03-JAN-2017 |
| **Filing Date:** | 06-SEP-2016 |
| **Time Stamp:** | 09:14:58 |
| **Application Type:** | Utility under 35 USC 111(a) |

## Payment information:

| | |
|---|---|
| Submitted with Payment | no |

## File Listing:

| Document Number | Document Description | File Name | File Size(Bytes)/ Message Digest | Multi Part /.zip | Pages (if appl.) |
|---|---|---|---|---|---|
| 1 | Electronic Terminal Disclaimer-Filed | eTerminal-Disclaimer.pdf | 32167<br>9a36b774811f5076a50ddec88c88b36262c50446 | no | 2 |

**Warnings:**

| Information: | |
|---|---|
| **Total Files Size (in bytes):** | 32167 |

**This Acknowledgement Receipt evidences receipt on the noted date by the USPTO of the indicated documents, characterized by the applicant, and including page counts, where applicable. It serves as evidence of receipt similar to a Post Card, as described in MPEP 503.**

**New Applications Under 35 U.S.C. 111**
**If a new application is being filed and the application includes the necessary components for a filing date (see 37 CFR 1.53(b)-(d) and MPEP 506), a Filing Receipt (37 CFR 1.54) will be issued in due course and the date shown on this Acknowledgement Receipt will establish the filing date of the application.**

**National Stage of an International Application under 35 U.S.C. 371**
**If a timely submission to enter the national stage of an international application is compliant with the conditions of 35 U.S.C. 371 and other applicable requirements a Form PCT/DO/EO/903 indicating acceptance of the application as a national stage submission under 35 U.S.C. 371 will be issued in addition to the Filing Receipt, in due course.**

**New International Application Filed with the USPTO as a Receiving Office**
**If a new international application is being filed and the international application includes the necessary components for an international filing date (see PCT Article 11 and MPEP 1810), a Notification of the International Application Number and of the International Filing Date (Form PCT/RO/105) will be issued in due course, subject to prescriptions concerning national security, and the date shown on this Acknowledgement Receipt will establish the international filing date of the application.**

UNITED STATES PATENT AND TRADEMARK OFFICE

UNITED STATES DEPARTMENT OF COMMERCE
United States Patent and Trademark Office
Address: COMMISSIONER FOR PATENTS
P.O. Box 1450
Alexandria, Virginia 22313-1450
www.uspto.gov

# NOTICE OF ALLOWANCE AND FEE(S) DUE

22851 7590 01/11/2017
Delphi Technologies, Inc.
P.O. Box 5052
M/C 483-400-402
Troy, MI 48007-5052

| EXAMINER |
|---|
| UNELUS, ERNEST |

| ART UNIT | PAPER NUMBER |
|---|---|
| 2181 | |

DATE MAILED: 01/11/2017

| APPLICATION NO. | FILING DATE | FIRST NAMED INVENTOR | ATTORNEY DOCKET NO. | CONFIRMATION NO. |
|---|---|---|---|---|
| 15/257,096 | 09/06/2016 | Robert M. Voto | DP-322037 CIP | 3519 |

TITLE OF INVENTION: FLEXIBLE MOBILE DEVICE CONNECTIVITY TO AUTOMOTIVE SYSTEMS WITH USB HUBS

| APPLN. TYPE | ENTITY STATUS | ISSUE FEE DUE | PUBLICATION FEE DUE | PREV. PAID ISSUE FEE | TOTAL FEE(S) DUE | DATE DUE |
|---|---|---|---|---|---|---|
| nonprovisional | UNDISCOUNTED | $960 | $0 | $0 | $960 | 04/11/2017 |

**THE APPLICATION IDENTIFIED ABOVE HAS BEEN EXAMINED AND IS ALLOWED FOR ISSUANCE AS A PATENT. PROSECUTION ON THE MERITS IS CLOSED. THIS NOTICE OF ALLOWANCE IS NOT A GRANT OF PATENT RIGHTS. THIS APPLICATION IS SUBJECT TO WITHDRAWAL FROM ISSUE AT THE INITIATIVE OF THE OFFICE OR UPON PETITION BY THE APPLICANT. SEE 37 CFR 1.313 AND MPEP 1308.**

**THE ISSUE FEE AND PUBLICATION FEE (IF REQUIRED) MUST BE PAID WITHIN THREE MONTHS FROM THE MAILING DATE OF THIS NOTICE OR THIS APPLICATION SHALL BE REGARDED AS ABANDONED. THIS STATUTORY PERIOD CANNOT BE EXTENDED. SEE 35 U.S.C. 151. THE ISSUE FEE DUE INDICATED ABOVE DOES NOT REFLECT A CREDIT FOR ANY PREVIOUSLY PAID ISSUE FEE IN THIS APPLICATION. IF AN ISSUE FEE HAS PREVIOUSLY BEEN PAID IN THIS APPLICATION (AS SHOWN ABOVE), THE RETURN OF PART B OF THIS FORM WILL BE CONSIDERED A REQUEST TO REAPPLY THE PREVIOUSLY PAID ISSUE FEE TOWARD THE ISSUE FEE NOW DUE.**

**HOW TO REPLY TO THIS NOTICE:**

I. Review the ENTITY STATUS shown above. If the ENTITY STATUS is shown as SMALL or MICRO, verify whether entitlement to that entity status still applies.

If the ENTITY STATUS is the same as shown above, pay the TOTAL FEE(S) DUE shown above.

If the ENTITY STATUS is changed from that shown above, on PART B - FEE(S) TRANSMITTAL, complete section number 5 titled "Change in Entity Status (from status indicated above)".

For purposes of this notice, small entity fees are 1/2 the amount of undiscounted fees, and micro entity fees are 1/2 the amount of small entity fees.

II. PART B - FEE(S) TRANSMITTAL, or its equivalent, must be completed and returned to the United States Patent and Trademark Office (USPTO) with your ISSUE FEE and PUBLICATION FEE (if required). If you are charging the fee(s) to your deposit account, section "4b" of Part B - Fee(s) Transmittal should be completed and an extra copy of the form should be submitted. If an equivalent of Part B is filed, a request to reapply a previously paid issue fee must be clearly made, and delays in processing may occur due to the difficulty in recognizing the paper as an equivalent of Part B.

III. All communications regarding this application must give the application number. Please direct all communications prior to issuance to Mail Stop ISSUE FEE unless advised to the contrary.

**IMPORTANT REMINDER: Utility patents issuing on applications filed on or after Dec. 12, 1980 may require payment of maintenance fees. It is patentee's responsibility to ensure timely payment of maintenance fees when due.**



PTOL-85 (Rev. 02/11)

Microchip Ex. 1006, p. 160
Microchip v. Aptiv
IPR2024-00495

## PART B - FEE(S) TRANSMITTAL

**Complete and send this form, together with applicable fee(s), to: Mail** **Mail Stop ISSUE FEE**
**Commissioner for Patents**
**P.O. Box 1450**
**Alexandria, Virginia 22313-1450**
**or Fax (571)-273-2885**

INSTRUCTIONS: This form should be used for transmitting the ISSUE FEE and PUBLICATION FEE (if required). Blocks 1 through 5 should be completed where appropriate. All further correspondence including the Patent, advance orders and notification of maintenance fees will be mailed to the current correspondence address as indicated unless corrected below or directed otherwise in Block 1, by (a) specifying a new correspondence address; and/or (b) indicating a separate "FEE ADDRESS" for maintenance fee notifications.

CURRENT CORRESPONDENCE ADDRESS (Note: Use Block 1 for any change of address)

22851 7590 01/11/2017
Delphi Technologies, Inc.
P.O. Box 5052
M/C 483-400-402
Troy, MI 48007-5052

Note: A certificate of mailing can only be used for domestic mailings of the Fee(s) Transmittal. This certificate cannot be used for any other accompanying papers. Each additional paper, such as an assignment or formal drawing, must have its own certificate of mailing or transmission.

**Certificate of Mailing or Transmission**
I hereby certify that this Fee(s) Transmittal is being deposited with the United States Postal Service with sufficient postage for first class mail in an envelope addressed to the Mail Stop ISSUE FEE address above, or being facsimile transmitted to the USPTO (571) 273-2885, on the date indicated below.

(Depositor's name)
(Signature)
(Date)

| APPLICATION NO. | FILING DATE | FIRST NAMED INVENTOR | ATTORNEY DOCKET NO. | CONFIRMATION NO. |
|---|---|---|---|---|
| 15/257,096 | 09/06/2016 | Robert M. Voto | DP-322037 CIP | 3519 |

TITLE OF INVENTION: FLEXIBLE MOBILE DEVICE CONNECTIVITY TO AUTOMOTIVE SYSTEMS WITH USB HUBS

| APPLN. TYPE | ENTITY STATUS | ISSUE FEE DUE | PUBLICATION FEE DUE | PREV. PAID ISSUE FEE | TOTAL FEE(S) DUE | DATE DUE |
|---|---|---|---|---|---|---|
| nonprovisional | UNDISCOUNTED | $960 | $0 | $0 | $960 | 04/11/2017 |

| EXAMINER | ART UNIT | CLASS-SUBCLASS |
|---|---|---|
| UNELUS, ERNEST | 2181 | 710-014000 |

1. Change of correspondence address or indication of "Fee Address" (37 CFR 1.363).
❑ Change of correspondence address (or Change of Correspondence Address form PTO/SB/122) attached.
❑ "Fee Address" indication (or "Fee Address" Indication form PTO/SB/47; Rev 03-02 or more recent) attached. **Use of a Customer Number is required.**

2. For printing on the patent front page, list
(1) The names of up to 3 registered patent attorneys or agents OR, alternatively,
(2) The name of a single firm (having as a member a registered attorney or agent) and the names of up to 2 registered patent attorneys or agents. If no name is listed, no name will be printed.
1_____
2_____
3_____

3. ASSIGNEE NAME AND RESIDENCE DATA TO BE PRINTED ON THE PATENT (print or type)
PLEASE NOTE: Unless an assignee is identified below, no assignee data will appear on the patent. If an assignee is identified below, the document has been filed for recordation as set forth in 37 CFR 3.11. Completion of this form is NOT a substitute for filing an assignment.
(A) NAME OF ASSIGNEE (B) RESIDENCE: (CITY and STATE OR COUNTRY)

Please check the appropriate assignee category or categories (will not be printed on the patent) : ❑ Individual ❑ Corporation or other private group entity ❑ Government

4a. The following fee(s) are submitted:
❑ Issue Fee
❑ Publication Fee (No small entity discount permitted)
❑ Advance Order - # of Copies _____

4b. Payment of Fee(s): **(Please first reapply any previously paid issue fee shown above)**
❑ A check is enclosed.
❑ Payment by credit card. Form PTO-2038 is attached.
❑ The director is hereby authorized to charge the required fee(s), any deficiency, or credits any overpayment, to Deposit Account Number _____ (enclose an extra copy of this form).

5. **Change in Entity Status** (from status indicated above)
❑ Applicant certifying micro entity status. See 37 CFR 1.29 — NOTE: Absent a valid certification of Micro Entity Status (see forms PTO/SB/15A and 15B), issue fee payment in the micro entity amount will not be accepted at the risk of application abandonment.
❑ Applicant asserting small entity status. See 37 CFR 1.27 — NOTE: If the application was previously under micro entity status, checking this box will be taken to be a notification of loss of entitlement to micro entity status.
❑ Applicant changing to regular undiscounted fee status. — NOTE: Checking this box will be taken to be a notification of loss of entitlement to small or micro entity status, as applicable.

NOTE: This form must be signed in accordance with 37 CFR 1.31 and 1.33. See 37 CFR 1.4 for signature requirements and certifications.

Authorized Signature _____ Date _____
Typed or printed name _____ Registration No. _____



PTOL-85 Part B (10-13) Approved for use through 10/31/2013. OMB 0651-0033 U.S. Patent and Trademark Office; U.S. DEPARTMENT OF COMMERCE

**Microchip Ex. 1006, p. 161**
**Microchip v. Aptiv**
**IPR2024-00495**

UNITED STATES PATENT AND TRADEMARK OFFICE

UNITED STATES DEPARTMENT OF COMMERCE
United States Patent and Trademark Office
Address: COMMISSIONER FOR PATENTS
P.O. Box 1450
Alexandria, Virginia 22313-1450
www.uspto.gov

| APPLICATION NO. | FILING DATE | FIRST NAMED INVENTOR | ATTORNEY DOCKET NO. | CONFIRMATION NO. |
|---|---|---|---|---|
| 15/257,096 | 09/06/2016 | Robert M. Voto | DP-322037 CIP | 3519 |

22851 7590 01/11/2017
Delphi Technologies, Inc.
P.O. Box 5052
M/C 483-400-402
Troy, MI 48007-5052

| EXAMINER |
|---|
| UNELUS, ERNEST |

| ART UNIT | PAPER NUMBER |
|---|---|
| 2181 | |

DATE MAILED: 01/11/2017

**Determination of Patent Term Adjustment under 35 U.S.C. 154 (b)**
(Applications filed on or after May 29, 2000)

The Office has discontinued providing a Patent Term Adjustment (PTA) calculation with the Notice of Allowance.

Section 1(h)(2) of the AIA Technical Corrections Act amended 35 U.S.C. 154(b)(3)(B)(i) to eliminate the requirement that the Office provide a patent term adjustment determination with the notice of allowance. See Revisions to Patent Term Adjustment, 78 Fed. Reg. 19416, 19417 (Apr. 1, 2013). Therefore, the Office is no longer providing an initial patent term adjustment determination with the notice of allowance. The Office will continue to provide a patent term adjustment determination with the Issue Notification Letter that is mailed to applicant approximately three weeks prior to the issue date of the patent, and will include the patent term adjustment on the patent. Any request for reconsideration of the patent term adjustment determination (or reinstatement of patent term adjustment) should follow the process outlined in 37 CFR 1.705.

Any questions regarding the Patent Term Extension or Adjustment determination should be directed to the Office of Patent Legal Administration at (571)-272-7702. Questions relating to issue and publication fee payments should be directed to the Customer Service Center of the Office of Patent Publication at 1-(888)-786-0101 or (571)-272-4200.



PTOL-85 (Rev. 02/11)

Microchip Ex. 1006, p. 162
Microchip v. Aptiv
IPR2024-00495

## OMB Clearance and PRA Burden Statement for PTOL-85 Part B

The Paperwork Reduction Act (PRA) of 1995 requires Federal agencies to obtain Office of Management and Budget approval before requesting most types of information from the public. When OMB approves an agency request to collect information from the public, OMB (i) provides a valid OMB Control Number and expiration date for the agency to display on the instrument that will be used to collect the information and (ii) requires the agency to inform the public about the OMB Control Number's legal significance in accordance with 5 CFR 1320.5(b).

The information collected by PTOL-85 Part B is required by 37 CFR 1.311. The information is required to obtain or retain a benefit by the public which is to file (and by the USPTO to process) an application. Confidentiality is governed by 35 U.S.C. 122 and 37 CFR 1.14. This collection is estimated to take 12 minutes to complete, including gathering, preparing, and submitting the completed application form to the USPTO. Time will vary depending upon the individual case. Any comments on the amount of time you require to complete this form and/or suggestions for reducing this burden, should be sent to the Chief Information Officer, U.S. Patent and Trademark Office, U.S. Department of Commerce, P.O. Box 1450, Alexandria, Virginia 22313-1450. DO NOT SEND FEES OR COMPLETED FORMS TO THIS ADDRESS. SEND TO: Commissioner for Patents, P.O. Box 1450, Alexandria, Virginia 22313-1450. Under the Paperwork Reduction Act of 1995, no persons are required to respond to a collection of information unless it displays a valid OMB control number.

## Privacy Act Statement

**The Privacy Act of 1974 (P.L. 93-579)** requires that you be given certain information in connection with your submission of the attached form related to a patent application or patent. Accordingly, pursuant to the requirements of the Act, please be advised that: (1) the general authority for the collection of this information is 35 U.S.C. 2(b)(2); (2) furnishing of the information solicited is voluntary; and (3) the principal purpose for which the information is used by the U.S. Patent and Trademark Office is to process and/or examine your submission related to a patent application or patent. If you do not furnish the requested information, the U.S. Patent and Trademark Office may not be able to process and/or examine your submission, which may result in termination of proceedings or abandonment of the application or expiration of the patent.

The information provided by you in this form will be subject to the following routine uses:

1. The information on this form will be treated confidentially to the extent allowed under the Freedom of Information Act (5 U.S.C. 552) and the Privacy Act (5 U.S.C 552a). Records from this system of records may be disclosed to the Department of Justice to determine whether disclosure of these records is required by the Freedom of Information Act.
2. A record from this system of records may be disclosed, as a routine use, in the course of presenting evidence to a court, magistrate, or administrative tribunal, including disclosures to opposing counsel in the course of settlement negotiations.
3. A record in this system of records may be disclosed, as a routine use, to a Member of Congress submitting a request involving an individual, to whom the record pertains, when the individual has requested assistance from the Member with respect to the subject matter of the record.
4. A record in this system of records may be disclosed, as a routine use, to a contractor of the Agency having need for the information in order to perform a contract. Recipients of information shall be required to comply with the requirements of the Privacy Act of 1974, as amended, pursuant to 5 U.S.C. 552a(m).
5. A record related to an International Application filed under the Patent Cooperation Treaty in this system of records may be disclosed, as a routine use, to the International Bureau of the World Intellectual Property Organization, pursuant to the Patent Cooperation Treaty.
6. A record in this system of records may be disclosed, as a routine use, to another federal agency for purposes of National Security review (35 U.S.C. 181) and for review pursuant to the Atomic Energy Act (42 U.S.C. 218(c)).
7. A record from this system of records may be disclosed, as a routine use, to the Administrator, General Services, or his/her designee, during an inspection of records conducted by GSA as part of that agency's responsibility to recommend improvements in records management practices and programs, under authority of 44 U.S.C. 2904 and 2906. Such disclosure shall be made in accordance with the GSA regulations governing inspection of records for this purpose, and any other relevant (i.e., GSA or Commerce) directive. Such disclosure shall not be used to make determinations about individuals.
8. A record from this system of records may be disclosed, as a routine use, to the public after either publication of the application pursuant to 35 U.S.C. 122(b) or issuance of a patent pursuant to 35 U.S.C. 151. Further, a record may be disclosed, subject to the limitations of 37 CFR 1.14, as a routine use, to the public if the record was filed in an application which became abandoned or in which the proceedings were terminated and which application is referenced by either a published application, an application open to public inspection or an issued patent.
9. A record from this system of records may be disclosed, as a routine use, to a Federal, State, or local law enforcement agency, if the USPTO becomes aware of a violation or potential violation of law or regulation.

| Notice of Allowability | Application No. 15/257,096 | Applicant(s) VOTO ET AL. | |
|---|---|---|---|
| | Examiner ERNEST UNELUS | Art Unit 2181 | AIA (First Inventor to File) Status Yes |

***-- The MAILING DATE of this communication appears on the cover sheet with the correspondence address--***

All claims being allowable, PROSECUTION ON THE MERITS IS (OR REMAINS) CLOSED in this application. If not included herewith (or previously mailed), a Notice of Allowance (PTOL-85) or other appropriate communication will be mailed in due course. **THIS NOTICE OF ALLOWABILITY IS NOT A GRANT OF PATENT RIGHTS.** This application is subject to withdrawal from issue at the initiative of the Office or upon petition by the applicant. See 37 CFR 1.313 and MPEP 1308.

1. ☒ This communication is responsive to *11/07/2016*.
   ☐ A declaration(s)/affidavit(s) under **37 CFR 1.130(b)** was/were filed on_____.
2. ☐ An election was made by the applicant in response to a restriction requirement set forth during the interview on _____; the restriction requirement and election have been incorporated into this action.
3. ☒ The allowed claim(s) is/are *1-19*. As a result of the allowed claim(s), you may be eligible to benefit from the **Patent Prosecution Highway** program at a participating intellectual property office for the corresponding application. For more information, please see http://www.uspto.gov/patents/init_events/pph/index.jsp or send an inquiry to PPHfeedback@uspto.gov.
4. ☐ Acknowledgment is made of a claim for foreign priority under 35 U.S.C. § 119(a)-(d) or (f).

   **Certified copies:**

   a) ☐ All b) ☐ Some *c) ☐ None of the:
   1. ☐ Certified copies of the priority documents have been received.
   2. ☐ Certified copies of the priority documents have been received in Application No. _____ .
   3. ☐ Copies of the certified copies of the priority documents have been received in this national stage application from the International Bureau (PCT Rule 17.2(a)).

   * Certified copies not received: _____.

Applicant has THREE MONTHS FROM THE "MAILING DATE" of this communication to file a reply complying with the requirements noted below. Failure to timely comply will result in ABANDONMENT of this application.
**THIS THREE-MONTH PERIOD IS NOT EXTENDABLE.**

5. ☐ CORRECTED DRAWINGS ( as "replacement sheets") must be submitted.
   ☐ including changes required by the attached Examiner's Amendment / Comment or in the Office action of Paper No./Mail Date _____.

   **Identifying indicia such as the application number (see 37 CFR 1.84(c)) should be written on the drawings in the front (not the back) of each sheet. Replacement sheet(s) should be labeled as such in the header according to 37 CFR 1.121(d).**
6. ☐ DEPOSIT OF and/or INFORMATION about the deposit of BIOLOGICAL MATERIAL must be submitted. Note the attached Examiner's comment regarding REQUIREMENT FOR THE DEPOSIT OF BIOLOGICAL MATERIAL.

**Attachment(s)**

1. ☒ Notice of References Cited (PTO-892)
2. ☐ Information Disclosure Statements (PTO/SB/08), Paper No./Mail Date _____
3. ☐ Examiner's Comment Regarding Requirement for Deposit of Biological Material
4. ☐ Interview Summary (PTO-413), Paper No./Mail Date _____ .
5. ☐ Examiner's Amendment/Comment
6. ☒ Examiner's Statement of Reasons for Allowance
7. ☐ Other _____.

/ERNEST UNELUS/
Primary Examiner, Art Unit 2181



**Microchip Ex. 1006, p. 164**
**Microchip v. Aptiv**
**IPR2024-00495**

## DETAILED ACTION

The present application, filed on or after March 16, 2013, is being examined under the first inventor to file provisions of the AIA.

### ALLOWABLE SUBJECT MATTER

The primary reason for allowance of claims 1 and 14 in the instant application is that prior arts don't teach a peripheral device to communicate with a USB hub bi-directionally in a first mode and to communicate with the hub only uni-directionally in a second mode and said USB Hub configured to simultaneously broadcast data from an embedded USB Host system to a plurality of USB Ports on the hub and to transmit data from each USB Port to the embedded USB Host system.

The remaining claims 2-13 and 15-19 are allowed by virtue of their dependencies on the independent claim. Hence, the examiner has allowed claims 1-19.

Any comments considered necessary by applicant must be submitted no later than the payment of the issue fee and, to avoid processing delays, should preferably accompany the issue fee. Such submissions should be clearly labeled "Comments on Statement of Reasons for Allowance."

### CLOSING COMMENTS

**Conclusion**

**a. STATUS OF CLAIMS IN THE APPLICATION**

The following is a summary of the treatment and status of all claims in the application as recommended by **M.P.E.P. 707.07(i)**:

**a(1) CLAIMS ALOWED IN THE APPLICATION**

Per the instant office action, claims 1-19 have been allowed.

**b. DIRECTION OF FUTURE CORRESPONDENCES**

Any inquiry concerning this communication or earlier communications from the examiner should be directed to Ernest Unelus whose telephone number is (571) 272-8596. The examiner can normally be reached on Monday to Friday 9:00 AM to 5:00 PM.

**IMPORTANT NOTE**

If attempts to reach the above noted Examiner by telephone are unsuccessful, the Examiner's supervisor, Mr. Idriss Alrobaye, can be reached at the following telephone number: Area Code (571) 270-1023.

The fax phone number for the organization where this application or proceeding is assigned is 571-273-8300. Information regarding the status of an application may be obtained from the Patent Application Information Retrieval (PAIR) system. Status information for published applications may be obtained from either Private PAIR or Public PAIR. Status information for unpublished applications is available through Private PAIR only. For more information about the PMR system, see her//pair-direct.uspto.gov. Should you have questions on access to the Private PAIR system, contact the Electronic Business Center (EBC) at 866-217- 91 97 (toll-free).

/Ernest Unelus/
Primary Examiner
Art Unit 2181

| Notice of References Cited | Application/Control No. 15/257,096 | Applicant(s)/Patent Under Reexamination VOTO ET AL. | |
|---|---|---|---|
| | Examiner ERNEST UNELUS | Art Unit 2181 | Page 1 of 1 |

**U.S. PATENT DOCUMENTS**

| * | | Document Number Country Code-Number-Kind Code | Date MM-YYYY | Name | CPC Classification | US Classification |
|---|---|---|---|---|---|---|
| * | A | US-2011/0208892 A1 | 08-2011 | Meyers; Christopher Michael | G06F13/4226 | 710/313 |
| * | B | US-2011/0208891 A1 | 08-2011 | Meyers; Christopher Michael | G06F13/385 | 710/313 |
| * | C | US-2016/0132448 A1 | 05-2016 | MAUNG; Win Naing | G06F13/366 | 710/104 |
| | D | US- | | | | |
| | E | US- | | | | |
| | F | US- | | | | |
| | G | US- | | | | |
| | H | US- | | | | |
| | I | US- | | | | |
| | J | US- | | | | |
| | K | US- | | | | |
| | L | US- | | | | |
| | M | US- | | | | |

**FOREIGN PATENT DOCUMENTS**

| * | | Document Number Country Code-Number-Kind Code | Date MM-YYYY | Country | Name | CPC Classification |
|---|---|---|---|---|---|---|
| | N | | | | | |
| | O | | | | | |
| | P | | | | | |
| | Q | | | | | |
| | R | | | | | |
| | S | | | | | |
| | T | | | | | |

**NON-PATENT DOCUMENTS**

| * | | Include as applicable: Author, Title Date, Publisher, Edition or Volume, Pertinent Pages) |
|---|---|---|
| | U | |
| | V | |
| | W | |
| | X | |

*A copy of this reference is not being furnished with this Office action. (See MPEP § 707.05(a).)
Dates in MM-YYYY format are publication dates. Classifications may be US or foreign.



**Microchip Ex. 1006, p. 167**
**Microchip v. Aptiv**
**IPR2024-00495**

**EAST Search History**

**EAST Search History (Prior Art)**

| Ref # | Hits | Search Query | DBs | Default Operator | Plurals | Time Stamp |
|---|---|---|---|---|---|---|
| L1 | 175 | usb with (peripheral or device) and usb with (downstream or upstream or plurality or multiple or second or another) with (port or plug interface) and hub with (hub or adapt$3) and bypass$4 with (host or master or initiat$3) | US-PGPUB; USPAT; USOCR; FPRS; EPO; JPO; DERWENT; IBM_TDB | OR | ON | 2017/01/04 21:54 |
| L2 | 177 | usb with (peripheral or device) and usb with (downstream or upstream or plurality or multiple or second or another) with (port or plug interface) and hub with (hub or adapt$3) and bypass$4 with (host or master or initiat$3 or slave) | US-PGPUB; USPAT; USOCR; FPRS; EPO; JPO; DERWENT; IBM_TDB | OR | ON | 2017/01/04 21:54 |
| L3 | 57 | usb with (peripheral or device) and usb with (downstream or upstream or plurality or multiple or second or another) with (port or plug interface) and hub with (hub or adapt$3) and bypass$4 with (host or master or initiat$3 or slave) with (peripheral or device or port or plug interface) | US-PGPUB; USPAT; USOCR; FPRS; EPO; JPO; DERWENT; IBM_TDB | OR | ON | 2017/01/04 21:54 |
| L4 | 44 | usb with (downstream or upstream or plurality or multiple or second or another) with (port or plug interface) with (hub or adapt$3) and bypass$4 with (host or master or initiat$3 or slave) with (peripheral or device or port or plug interface) | US-PGPUB; USPAT; USOCR; FPRS; EPO; JPO; DERWENT; IBM_TDB | OR | ON | 2017/01/04 21:55 |
| L5 | 30 | usb with (downstream or upstream or plurality or multiple or second or another) with (port or plug interface) with (hub or adapt$3) and bypass$4 with (host or master or initiat$3 or slave) with (peripheral or device or port or plug interface) and (host or master or slave) near5 (initiat$4 or respond$3 or repl$4) | US-PGPUB; USPAT; USOCR; FPRS; EPO; JPO; DERWENT; IBM_TDB | OR | ON | 2017/01/04 21:55 |
| L6 | 30 | usb with (downstream or upstream or plurality or multiple or second or another) with (port or plug interface) with (hub or adapt$3) and bypass$4 with (host or master or initiat$3 or slave) with (peripheral or device or port or plug interface) and (host or master or slave) near5 (initiat$4 or respond$3 or repl$4) | US-PGPUB; USPAT; USOCR; FPRS; EPO; JPO; DERWENT; IBM_TDB | OR | ON | 2017/01/04 22:16 |
| L7 | 21 | usb with (peripheral or device) and usb with (plurality or multiple or second or another) with (port or plug interface) with (adapt$3 or hub) and (rout$3 or switch$4) with (port or plug interface) and (bypass$3 or bridg$3) and G06F2213/0042.cpc. | US-PGPUB; USPAT; USOCR; FPRS; EPO; JPO; DERWENT; IBM_TDB | OR | ON | 2017/01/04 22:16 |
| L8 | 27 | usb with (peripheral or device) and usb with (plurality | US-PGPUB; | OR | ON | 2017/01/04 |

| | | | | | | |
|---|---|---|---|---|---|---|
| | | or multiple or second or another) with (port or plug interface) with (adapt$3 or hub) and (rout$3 or switch$4) with (port or plug interface) and (bypass$3 or bridg$3) and G06F13/4022.cpc. | USPAT; USOCR; FPRS; EPO; JPO; DERWENT; IBM_TDB | | | 22:16 |
| L9 | 48 | usb with (peripheral or device) and usb with (plurality or multiple or second or another) with (port or plug interface) with (adapt$3 or hub) and (rout$3 or switch$4) with (port or plug interface) and (bypass$3 or bridg$3) and G06F13/385.cpc. | US-PGPUB; USPAT; USOCR; FPRS; EPO; JPO; DERWENT; IBM_TDB | OR | ON | 2017/01/04 22:16 |
| L10 | 78 | usb with (peripheral or device) and usb with (plurality or multiple or second or another) with (port or plug interface) with (adapt$3 or hub) and (rout$3 or switch$4) with (port or plug interface) and (bypass$3 or bridg$3) and G06F13/366,4068,4282,4027,385,4022.cpc. | US-PGPUB; USPAT; USOCR; FPRS; EPO; JPO; DERWENT; IBM_TDB | OR | ON | 2017/01/04 22:17 |
| L11 | 41 | usb with (peripheral or device) and usb with (plurality or multiple or second or another) with (port or plug interface) with (adapt$3 or hub) and (rout$3 or switch$4) with (port or plug interface) and (bypass$3 or bridg$3) with (host or master or slave) and G06F13/366,4068,4282,4027,385,4022.cpc. | US-PGPUB; USPAT; USOCR; FPRS; EPO; JPO; DERWENT; IBM_TDB | OR | ON | 2017/01/04 22:17 |
| L12 | 22 | usb with (peripheral or device) and usb with (plurality or multiple or second or another) with (port or plug interface) with (adapt$3 or hub) and (rout$3 or switch$4) with (port or plug interface) and (bypass$3 or bridg$3) with (host or master or slave) and G06F13/366,4068,4282,4027,385,4022.cpc. and (host or master or slave) with (initiate or initiated or initiating) | US-PGPUB; USPAT; USOCR; FPRS; EPO; JPO; DERWENT; IBM_TDB | OR | ON | 2017/01/04 22:17 |
| L13 | 22 | usb with (peripheral or device) and usb with (plurality or multiple or second or another) with (port or plug interface) with (adapt$3 or hub) and (rout$3 or switch$4) with (port or plug interface) and (bypass$3 or bridg$3) with (host or master or slave) and G06F13/387,366,4068,4282,4027,385,4022,4045.cpc. and (host or master or slave) with (initiate or initiated or initiating) | US-PGPUB; USPAT; USOCR; FPRS; EPO; JPO; DERWENT; IBM_TDB | OR | ON | 2017/01/04 22:17 |
| L14 | 8 | usb with (peripheral or device) and usb with (plurality or multiple or second or another) with (port or plug interface) with (adapt$3 or hub) and (rout$3 or switch$4) with (port or plug interface) and (bypass$3 or bridg$3) with (host or master or slave) and G06F13/4022,4045.cpc. and (host or master or slave) with (initiate or initiated or initiating) | US-PGPUB; USPAT; USOCR; FPRS; EPO; JPO; DERWENT; IBM_TDB | OR | ON | 2017/01/04 22:47 |
| L15 | 1491 | G06F13/4045.cpc. | US-PGPUB; USPAT; USOCR; FPRS; EPO; JPO; DERWENT; IBM_TDB | OR | ON | 2017/01/04 22:47 |
| L16 | 8636 | G06F13/4022.cpc. | US-PGPUB; USPAT; USOCR; FPRS; | OR | ON | 2017/01/04 22:47 |

| | | | | | | |
|---|---|---|---|---|---|---|
| | | | EPO; JPO; DERWENT; IBM_TDB | | | |
| L17 | 23 | usb with (peripheral or device) and usb with (plurality or multiple or second or another) with (port or plug interface) with (adapt$3 or hub) and (rout$3 or switch$4) with (port or plug interface) and (bypass$3 or bridg$3) with (host or master or slave) and 710/$.ccls. and (host or master or slave) with (initiate or initiated or initiating) | US-PGPUB; USPAT; USOCR; FPRS; EPO; JPO; DERWENT; IBM_TDB | OR | ON | 2017/01/04 22:48 |
| L18 | 11 | usb with (peripheral or device) and usb with (plurality or multiple or second or another) with (port or plug interface) with (adapt$3 or hub) and (rout$3 or switch$4) with (port or plug interface) and (bypass$3 or bridg$3) with (host or master or slave) and 710/15,305,313.ccls. and (host or master or slave) with (initiate or initiated or initiating) | US-PGPUB; USPAT; USOCR; FPRS; EPO; JPO; DERWENT; IBM_TDB | OR | ON | 2017/01/04 22:48 |
| L19 | 29 | Shyambabu Yeda.in. or Robert Voto.in. or Craig Petku.in. | US-PGPUB; USPAT; USOCR; FPRS; EPO; JPO; DERWENT; IBM_TDB | NEAR | ON | 2017/01/04 22:48 |
| L20 | 4 | 19 and (vehicle or automobile or car) with usb with (peripheral or device) and bridge | US-PGPUB; USPAT; USOCR; FPRS; EPO; JPO; DERWENT; IBM_TDB | OR | ON | 2017/01/04 22:50 |
| L21 | 15620 | G06F13/385.cpc. | US-PGPUB; USPAT; USOCR; FPRS; EPO; JPO; DERWENT; IBM_TDB | OR | ON | 2017/01/04 22:50 |

**1/4/2017 10:52:51 PM**
**C:\Users\eunelus\Documents\EAST\Workspaces\14487947.wsp**



**Microchip Ex. 1006, p. 170**
**Microchip v. Aptiv**
**IPR2024-00495**

| Search Notes | Application/Control No. | Applicant(s)/Patent Under Reexamination |
|---|---|---|
| | 15257096 | VOTO ET AL. |
| | **Examiner** | **Art Unit** |
| | ERNEST UNELUS | 2181 |

## CPC- SEARCHED

| Symbol | Date | Examiner |
|---|---|---|
| G06F 13/4022, 4045, 385, 387, 366, 4068, 4282, 4027 | 10/13/2016 | E.U |
| G06F 13/4022, 4045, 385, 387, 366, 4068, 4282, 4027 | 1/4/2017 | E.U |

## CPC COMBINATION SETS - SEARCHED

| Symbol | Date | Examiner |
|---|---|---|
| | | |

## US CLASSIFICATION SEARCHED

| Class | Subclass | Date | Examiner |
|---|---|---|---|
| | | | |

## SEARCH NOTES

| Search Notes | Date | Examiner |
|---|---|---|
| EAST search: US-PGPUB; USPAT; USOCR; EPO; JPO; DERWENT | 10/13/2016 | E.U |
| Inventor search utilizing eDAN and EAST | 10/13/2016 | E.U |
| CPC search of G06F 13/4022, 4045, 385, 387, 366, 4068, 4282, 4027 and G06F 2213/0042 | 10/13/2016 | E.U |
| EAST search: US-PGPUB; USPAT; USOCR; EPO; JPO; DERWENT | 1/4/2017 | E.U |
| Inventor search utilizing PE2E and EAST | 1/4/2017 | E.U |
| CPC search of G06F 13/4022, 4045, 385, 387, 366, 4068, 4282, 4027 | 1/4/2017 | E.U |

## INTERFERENCE SEARCH

| US Class/ CPC Symbol | US Subclass / CPC Group | Date | Examiner |
|---|---|---|---|
| G06F | 13/4022, 4045 | 10/13/2016 | E.U |



Microchip Ex. 1006, p. 171
Microchip v. Aptiv
IPR2024-00495

| Issue Classification | Application/Control No. | Applicant(s)/Patent Under Reexamination |
|---|---|---|
| | 15257096 | VOTO ET AL. |
| | **Examiner** | **Art Unit** |
| | ERNEST UNELUS | 2181 |

| CPC | | | | | | |
|---|---|---|---|---|---|---|
| **Symbol** | | | | | **Type** | **Version** |
| G06F | | 13 | / | 4022 | F | 2013-01-01 |
| G06F | | 13 | / | 4282 | I | 2013-01-01 |
| G06F | | 13 | / | 4045 | I | 2013-01-01 |
| G06F | | 13 | / | 385 | I | 2013-01-01 |
| G06F | | 2213 | / | 0042 | A | 2013-01-01 |
| G06F | | 2213 | / | 4004 | A | 2013-01-01 |
| | | | / | | | |
| | | | / | | | |
| | | | / | | | |
| | | | / | | | |
| | | | / | | | |
| | | | / | | | |
| | | | / | | | |
| | | | / | | | |
| | | | / | | | |

| CPC Combination Sets | | | | | | | | |
|---|---|---|---|---|---|---|---|---|
| **Symbol** | | | | | **Type** | **Set** | **Ranking** | **Version** |
| | | | / | | | | | |
| | | | / | | | | | |

| | | | |
|---|---|---|---|
| NONE<br><br>(Assistant Examiner) | (Date) | **Total Claims Allowed:**<br>19 | |
| /ERNEST UNELUS/<br>Primary Examiner.Art Unit 2181<br><br>(Primary Examiner) | 01/04/2017<br><br>(Date) | O.G. Print Claim(s)<br>1 | O.G. Print Figure<br>6 |

U.S. Patent and Trademark Office

Part of Paper No. 20170104

| Issue Classification | Application/Control No. | Applicant(s)/Patent Under Reexamination |
|---|---|---|
| | 15257096 | VOTO ET AL. |
| | **Examiner** | **Art Unit** |
| | ERNEST UNELUS | 2181 |

| US ORIGINAL CLASSIFICATION | | INTERNATIONAL CLASSIFICATION | |
|---|---|---|---|
| CLASS | SUBCLASS | CLAIMED | NON-CLAIMED |
| | | G 0 6 F 13 / 36 (2006.01.01) | |

**CROSS REFERENCE(S)**

| CLASS | SUBCLASS (ONE SUBCLASS PER BLOCK) | | | | |
|---|---|---|---|---|---|
| | | | | | |
| | | | | | |
| | | | | | |
| | | | | | |
| | | | | | |
| | | | | | |
| | | | | | |
| | | | | | |
| | | | | | |
| | | | | | |
| | | | | | |
| | | | | | |
| | | | | | |

| | | | |
|---|---|---|---|
| NONE<br><br>(Assistant Examiner) | (Date) | **Total Claims Allowed:**<br>19 | |
| /ERNEST UNELUS/<br>Primary Examiner.Art Unit 2181<br><br>(Primary Examiner) | 01/04/2017<br><br>(Date) | O.G. Print Claim(s)<br>1 | O.G. Print Figure<br>6 |

U.S. Patent and Trademark Office

Part of Paper No. 20170104

| Issue Classification | Application/Control No. | Applicant(s)/Patent Under Reexamination |
|---|---|---|
| | 15257096 | VOTO ET AL. |
| | **Examiner** | **Art Unit** |
| | ERNEST UNELUS | 2181 |

☐ Claims renumbered in the same order as presented by applicant ☐ CPA ☒ T.D. ☐ R.1.47

| Final | Original | Final | Original | Final | Original | Final | Original | Final | Original | Final | Original | Final | Original | Final | Original |
|---|---|---|---|---|---|---|---|---|---|---|---|---|---|---|---|
| 1 | 1 | 17 | 17 | | | | | | | | | | | | |
| 2 | 2 | 18 | 18 | | | | | | | | | | | | |
| 3 | 3 | 19 | 19 | | | | | | | | | | | | |
| 4 | 4 | | | | | | | | | | | | | | |
| 5 | 5 | | | | | | | | | | | | | | |
| 6 | 6 | | | | | | | | | | | | | | |
| 7 | 7 | | | | | | | | | | | | | | |
| 8 | 8 | | | | | | | | | | | | | | |
| 9 | 9 | | | | | | | | | | | | | | |
| 10 | 10 | | | | | | | | | | | | | | |
| 11 | 11 | | | | | | | | | | | | | | |
| 12 | 12 | | | | | | | | | | | | | | |
| 13 | 13 | | | | | | | | | | | | | | |
| 14 | 14 | | | | | | | | | | | | | | |
| 15 | 15 | | | | | | | | | | | | | | |
| 16 | 16 | | | | | | | | | | | | | | |

| | | | |
|---|---|---|---|
| NONE<br><br>(Assistant Examiner) | (Date) | **Total Claims Allowed:**<br>19 | |
| /ERNEST UNELUS/<br>Primary Examiner.Art Unit 2181<br><br>(Primary Examiner) | 01/04/2017<br><br>(Date) | O.G. Print Claim(s)<br>1 | O.G. Print Figure<br>6 |

U.S. Patent and Trademark Office

Part of Paper No. 20170104

UNITED STATES PATENT AND TRADEMARK OFFICE

UNITED STATES DEPARTMENT OF COMMERCE
United States Patent and Trademark Office
Address: COMMISSIONER FOR PATENTS
P.O. Box 1450
Alexandria, Virginia 22313-1450
www.uspto.gov

# BIB DATA SHEET

**CONFIRMATION NO. 3519**

| SERIAL NUMBER | FILING or 371(c) DATE | CLASS | GROUP ART UNIT | ATTORNEY DOCKET NO. |
|---|---|---|---|---|
| 15/257,096 | 09/06/2016<br>**RULE** | 710 | 2181 | DP-322037 CIP |

**APPLICANTS**
DELPHI TECHNOLOGIES, INC., TROY, MI;

**INVENTORS**
Robert M. Voto, Clarkston, MI;
Shyambabu Yeda, Rochester Hills, MI;
Craig Allan Petku, Clarkston, MI;

**** CONTINUING DATA ***************************
This application is a CIP of 14/487,947 09/16/2014 PAT 9460037
which claims benefit of 61/882,915 09/26/2013

**** FOREIGN APPLICATIONS ****************************

**** IF REQUIRED, FOREIGN FILING LICENSE GRANTED ****
09/15/2016

| Foreign Priority claimed | ☐ Yes ☑ No | | STATE OR COUNTRY | SHEETS DRAWINGS | TOTAL CLAIMS | INDEPENDENT CLAIMS |
|---|---|---|---|---|---|---|
| 35 USC 119(a-d) conditions met | ☐ Yes ☐ No | ☐ Met after Allowance | | | | |
| Verified and Acknowledged | /ERNEST UNELUS/ Examiner's Signature | E.U Initials | MI | 10 | 19 | 2 |

**ADDRESS**
Delphi Technologies, Inc.
P.O. Box 5052
M/C 483-400-402
Troy, MI 48007-5052
UNITED STATES

**TITLE**
FLEXIBLE MOBILE DEVICE CONNECTIVITY TO AUTOMOTIVE SYSTEMS WITH USB HUBS

| FILING FEE RECEIVED | | |
|---|---|---|
| 1740 | FEES: Authority has been given in Paper No._____ to charge/credit DEPOSIT ACCOUNT No._____ for following: | ☐ All Fees<br>☐ 1.16 Fees (Filing)<br>☐ 1.17 Fees (Processing Ext. of time)<br>☐ 1.18 Fees (Issue)<br>☐ Other _____<br>☐ Credit |

| Index of Claims | Application/Control No. | Applicant(s)/Patent Under Reexamination |
|---|---|---|
| | 15257096 | VOTO ET AL. |
| | **Examiner** | **Art Unit** |
| | ERNEST UNELUS | 2181 |

| | | | | | | | |
|---|---|---|---|---|---|---|---|
| ✓ | Rejected | - | Cancelled | N | Non-Elected | A | Appeal |
| = | Allowed | ÷ | Restricted | I | Interference | O | Objected |

☐ Claims renumbered in the same order as presented by applicant ☐ CPA ☒ T.D. ☐ R.1.47

| CLAIM | | DATE | | | | | | | | |
|---|---|---|---|---|---|---|---|---|---|---|
| Final | Original | 10/31/2016 | 01/04/2017 | | | | | | | |
| | 1 | ✓ | = | | | | | | | |
| | 2 | ✓ | = | | | | | | | |
| | 3 | ✓ | = | | | | | | | |
| | 4 | ✓ | = | | | | | | | |
| | 5 | ✓ | = | | | | | | | |
| | 6 | ✓ | = | | | | | | | |
| | 7 | ✓ | = | | | | | | | |
| | 8 | ✓ | = | | | | | | | |
| | 9 | ✓ | = | | | | | | | |
| | 10 | ✓ | = | | | | | | | |
| | 11 | ✓ | = | | | | | | | |
| | 12 | ✓ | = | | | | | | | |
| | 13 | ✓ | = | | | | | | | |
| | 14 | ✓ | = | | | | | | | |
| | 15 | ✓ | = | | | | | | | |
| | 16 | ✓ | = | | | | | | | |
| | 17 | ✓ | = | | | | | | | |
| | 18 | ✓ | = | | | | | | | |
| | 19 | ✓ | = | | | | | | | |



Microchip Ex. 1006, p. 176
Microchip v. Aptiv
IPR2024-00495

## PART B - FEE(S) TRANSMITTAL

**Complete and send this form, together with applicable fee(s), to: Mail** **Mail Stop ISSUE FEE**
**Commissioner for Patents**
**P.O. Box 1450**
**Alexandria, Virginia 22313-1450**
**or Fax (571)-273-2885**

INSTRUCTIONS: This form should be used for transmitting the ISSUE FEE and PUBLICATION FEE (if required). Blocks 1 through 5 should be completed where appropriate. All further correspondence including the Patent, advance orders and notification of maintenance fees will be mailed to the current correspondence address as indicated unless corrected below or directed otherwise in Block 1, by (a) specifying a new correspondence address; and/or (b) indicating a separate "FEE ADDRESS" for maintenance fee notifications.

CURRENT CORRESPONDENCE ADDRESS (Note: Use Block 1 for any change of address)

22851 7590 04/11/2017
Delphi Technologies, Inc.
P.O. Box 5052
M/C 483-400-402
Troy, MI 48007-5052

Note: A certificate of mailing can only be used for domestic mailings of the Fee(s) Transmittal. This certificate cannot be used for any other accompanying papers. Each additional paper, such as an assignment or formal drawing, must have its own certificate of mailing or transmission.

**Certificate of Mailing or Transmission**
I hereby certify that this Fee(s) Transmittal is being deposited with the United States Postal Service with sufficient postage for first class mail in an envelope addressed to the Mail Stop ISSUE FEE address above, or being facsimile transmitted to the USPTO (571) 273-2885, on the date indicated below.

(Depositor's name)
(Signature)
(Date)

| APPLICATION NO. | FILING DATE | FIRST NAMED INVENTOR | ATTORNEY DOCKET NO. | CONFIRMATION NO. |
|---|---|---|---|---|
| 15/257,096 | 09/06/2016 | Robert M. Voto | DP-322037 CIP | 3519 |

TITLE OF INVENTION: FLEXIBLE MOBILE DEVICE CONNECTIVITY TO AUTOMOTIVE SYSTEMS WITH USB HUBS

| APPLN. TYPE | ENTITY STATUS | ISSUE FEE DUE | PUBLICATION FEE DUE | PREV. PAID ISSUE FEE | TOTAL FEE(S) DUE | DATE DUE |
|---|---|---|---|---|---|---|
| nonprovisional | UNDISCOUNTED | $960 | $0 | $0 | $960 | 04/11/2017 |

| EXAMINER | ART UNIT | CLASS-SUBCLASS |
|---|---|---|
| UNELUS, ERNEST | 2181 | 710-014000 |

1. Change of correspondence address or indication of "Fee Address" (37 CFR 1.363).
- ☐ Change of correspondence address (or Change of Correspondence Address form PTO/SB/122) attached.
- ☐ "Fee Address" indication (or "Fee Address" Indication form PTO/SB/47; Rev 03-02 or more recent) attached. **Use of a Customer Number is required.**

2. For printing on the patent front page, list
(1) The names of up to 3 registered patent attorneys or agents OR, alternatively,
(2) The name of a single firm (having as a member a registered attorney or agent) and the names of up to 2 registered patent attorneys or agents. If no name is listed, no name will be printed.

1 Robert J. Myers
2
3

3. ASSIGNEE NAME AND RESIDENCE DATA TO BE PRINTED ON THE PATENT (print or type)

PLEASE NOTE: Unless an assignee is identified below, no assignee data will appear on the patent. If an assignee is identified below, the document has been filed for recordation as set forth in 37 CFR 3.11. Completion of this form is NOT a substitute for filing an assignment.

(A) NAME OF ASSIGNEE: Delphi Technologies Inc.
(B) RESIDENCE: (CITY and STATE OR COUNTRY): Troy, MI

Please check the appropriate assignee category or categories (will not be printed on the patent): ☐ Individual ☑ Corporation or other private group entity ☐ Government

4a. The following fee(s) are submitted:
- ☑ Issue Fee
- ☐ Publication Fee (No small entity discount permitted)
- ☐ Advance Order - # of Copies .....

4b. Payment of Fee(s): **(Please first reapply any previously paid issue fee shown above)**
- ☐ A check is enclosed.
- ☐ Payment by credit card. Form PTO-2038 is attached.
- ☑ The director is hereby authorized to charge the required fee(s), any deficiency, or credits any overpayment, to Deposit Account Number 600831. (enclose an extra copy of this form).

5. **Change in Entity Status** (from status indicated above)
- ☐ Applicant certifying micro entity status. See 37 CFR 1.29 — NOTE: Absent a valid certification of Micro Entity Status (see forms PTO/SB/15A and 15B), issue fee payment in the micro entity amount will not be accepted at the risk of application abandonment.
- ☐ Applicant asserting small entity status. See 37 CFR 1.27 — NOTE: If the application was previously under micro entity status, checking this box will be taken to be a notification of loss of entitlement to micro entity status.
- ☐ Applicant changing to regular undiscounted fee status. — NOTE: Checking this box will be taken to be a notification of loss of entitlement to small or micro entity status, as applicable.

NOTE: This form must be signed in accordance with 37 CFR 1.31 and 1.33. See 37 CFR 1.4 for signature requirements and certifications.

Authorized Signature ..... Date .....

Typed or printed name ..... Registration No. .....



PTOL-85 Part B (10-13) Approved for use through 10/31/2013. OMB 0651-0033 U.S. Patent and Trademark Office; U.S. DEPARTMENT OF COMMERCE

**Microchip Ex. 1006, p. 177**
**Microchip v. Aptiv**
**IPR2024-00495**

# Electronic Patent Application Fee Transmittal

| | |
|---|---|
| **Application Number:** | 15257096 |
| **Filing Date:** | 06-Sep-2016 |
| **Title of Invention:** | FLEXIBLE MOBILE DEVICE CONNECTIVITY TO AUTOMOTIVE SYSTEMS WITH USB HUBS |
| **First Named Inventor/Applicant Name:** | Robert M. Voto |
| **Filer:** | Lawrence Dean Hazelton/Kandace Powell |
| **Attorney Docket Number:** | DP-322037 CIP |

Filed as Large Entity

**Filing Fees for Utility under 35 USC 111(a)**

| Description | Fee Code | Quantity | Amount | Sub-Total in USD($) |
|---|---|---|---|---|
| **Basic Filing:** | | | | |
| **Pages:** | | | | |
| **Claims:** | | | | |
| **Miscellaneous-Filing:** | | | | |
| **Petition:** | | | | |
| **Patent-Appeals-and-Interference:** | | | | |
| **Post-Allowance-and-Post-Issuance:** | | | | |
| UTILITY APPL ISSUE FEE | 1501 | 1 | 960 | 960 |

| Description | Fee Code | Quantity | Amount | Sub-Total in USD($) |
|---|---|---|---|---|
| **Extension-of-Time:** | | | | |
| **Miscellaneous:** | | | | |
| | | | **Total in USD ($)** | **960** |

# Electronic Acknowledgement Receipt

| | |
|---|---|
| **EFS ID:** | 28835931 |
| **Application Number:** | 15257096 |
| **International Application Number:** | |
| **Confirmation Number:** | 3519 |
| **Title of Invention:** | FLEXIBLE MOBILE DEVICE CONNECTIVITY TO AUTOMOTIVE SYSTEMS WITH USB HUBS |
| **First Named Inventor/Applicant Name:** | Robert M. Voto |
| **Customer Number:** | 22851 |
| **Filer:** | Lawrence Dean Hazelton/Kandace Powell |
| **Filer Authorized By:** | Lawrence Dean Hazelton |
| **Attorney Docket Number:** | DP-322037 CIP |
| **Receipt Date:** | 05-APR-2017 |
| **Filing Date:** | 06-SEP-2016 |
| **Time Stamp:** | 10:48:43 |
| **Application Type:** | Utility under 35 USC 111(a) |

## Payment information:

| | |
|---|---|
| Submitted with Payment | yes |
| Payment Type | DA |
| Payment was successfully received in RAM | $960 |
| RAM confirmation Number | 040517INTEFSW00007834500831 |
| Deposit Account | 500831 |
| Authorized User | Kandace Powell |
| The Director of the USPTO is hereby authorized to charge indicated fees and credit any overpayment as follows:<br>37 CFR 1.20 (Post Issuance fees)<br>37 CFR 1.21 (Miscellaneous fees and charges) | |

## File Listing:

| Document Number | Document Description | File Name | File Size(Bytes)/ Message Digest | Multi Part /.zip | Pages (if appl.) |
|---|---|---|---|---|---|
| 1 | Issue Fee Payment (PTO-85B) | DP322037CIP_PTOL_85.pdf | 131800<br>6f9122d3b1884c983e184892225c8533d2a353da | no | 1 |
| **Warnings:** | | | | | |
| The page size in the PDF is too large. The pages should be 8.5 x 11 or A4. If this PDF is submitted, the pages will be resized upon entry into the Image File Wrapper and may affect subsequent processing | | | | | |
| **Information:** | | | | | |
| 2 | Fee Worksheet (SB06) | fee-info.pdf | 30782<br>3c519e00fdbab7145fce43fd57d1d8292c2950c2 | no | 2 |
| **Warnings:** | | | | | |
| **Information:** | | | | | |
| | | **Total Files Size (in bytes):** | 162582 | | |

**This Acknowledgement Receipt evidences receipt on the noted date by the USPTO of the indicated documents, characterized by the applicant, and including page counts, where applicable. It serves as evidence of receipt similar to a Post Card, as described in MPEP 503.**

**New Applications Under 35 U.S.C. 111**
**If a new application is being filed and the application includes the necessary components for a filing date (see 37 CFR 1.53(b)-(d) and MPEP 506), a Filing Receipt (37 CFR 1.54) will be issued in due course and the date shown on this Acknowledgement Receipt will establish the filing date of the application.**

**National Stage of an International Application under 35 U.S.C. 371**
**If a timely submission to enter the national stage of an international application is compliant with the conditions of 35 U.S.C. 371 and other applicable requirements a Form PCT/DO/EO/903 indicating acceptance of the application as a national stage submission under 35 U.S.C. 371 will be issued in addition to the Filing Receipt, in due course.**

**New International Application Filed with the USPTO as a Receiving Office**
**If a new international application is being filed and the international application includes the necessary components for an international filing date (see PCT Article 11 and MPEP 1810), a Notification of the International Application Number and of the International Filing Date (Form PCT/RO/105) will be issued in due course, subject to prescriptions concerning national security, and the date shown on this Acknowledgement Receipt will establish the international filing date of the application.**

## PART B - FEE(S) TRANSMITTAL

**Complete and send this form, together with applicable fee(s), to: Mail** **Mail Stop ISSUE FEE**
**Commissioner for Patents**
**P.O. Box 1450**
**Alexandria, Virginia 22313-1450**
**or Fax (571)-273-2885**

INSTRUCTIONS: This form should be used for transmitting the ISSUE FEE and PUBLICATION FEE (if required). Blocks 1 through 5 should be completed where appropriate. All further correspondence including the Patent, advance orders and notification of maintenance fees will be mailed to the current correspondence address as indicated unless corrected below or directed otherwise in Block 1, by (a) specifying a new correspondence address; and/or (b) indicating a separate "FEE ADDRESS" for maintenance fee notifications.

CURRENT CORRESPONDENCE ADDRESS (Note: Use Block 1 for any change of address)

22851 7590 04/11/2017
Delphi Technologies, Inc.
P.O. Box 5052
M/C 483-400-402
Troy, MI 48007-5052

Note: A certificate of mailing can only be used for domestic mailings of the Fee(s) Transmittal. This certificate cannot be used for any other accompanying papers. Each additional paper, such as an assignment or formal drawing, must have its own certificate of mailing or transmission.

**Certificate of Mailing or Transmission**
I hereby certify that this Fee(s) Transmittal is being deposited with the United States Postal Service with sufficient postage for first class mail in an envelope addressed to the Mail Stop ISSUE FEE address above, or being facsimile transmitted to the USPTO (571) 273-2885, on the date indicated below.

(Depositor's name)
(Signature)
(Date)

| APPLICATION NO. | FILING DATE | FIRST NAMED INVENTOR | ATTORNEY DOCKET NO. | CONFIRMATION NO. |
|---|---|---|---|---|
| 15/257,096 | 09/06/2016 | Robert M. Voto | DP-322037 CIP | 3519 |

TITLE OF INVENTION: FLEXIBLE MOBILE DEVICE CONNECTIVITY TO AUTOMOTIVE SYSTEMS WITH USB HUBS

| APPLN. TYPE | ENTITY STATUS | ISSUE FEE DUE | PUBLICATION FEE DUE | PREV. PAID ISSUE FEE | TOTAL FEE(S) DUE | DATE DUE |
|---|---|---|---|---|---|---|
| nonprovisional | UNDISCOUNTED | $960 | $0 | $0 | $960 | 04/11/2017 |

| EXAMINER | ART UNIT | CLASS-SUBCLASS |
|---|---|---|
| UNELUS, ERNEST | 2181 | 710-014000 |

1. Change of correspondence address or indication of "Fee Address" (37 CFR 1.363).
- ☐ Change of correspondence address (or Change of Correspondence Address form PTO/SB/122) attached.
- ☐ "Fee Address" indication (or "Fee Address" Indication form PTO/SB/47; Rev 03-02 or more recent) attached. **Use of a Customer Number is required.**

2. For printing on the patent front page, list
(1) The names of up to 3 registered patent attorneys or agents OR, alternatively,
(2) The name of a single firm (having as a member a registered attorney or agent) and the names of up to 2 registered patent attorneys or agents. If no name is listed, no name will be printed.

1. Robert J. Myers
2.
3.

3. ASSIGNEE NAME AND RESIDENCE DATA TO BE PRINTED ON THE PATENT (print or type)

PLEASE NOTE: Unless an assignee is identified below, no assignee data will appear on the patent. If an assignee is identified below, the document has been filed for recordation as set forth in 37 CFR 3.11. Completion of this form is NOT a substitute for filing an assignment.

(A) NAME OF ASSIGNEE: Delphi Technologies, Inc.
(B) RESIDENCE: (CITY and STATE OR COUNTRY): Troy, MI

Please check the appropriate assignee category or categories (will not be printed on the patent): ☐ Individual ☒ Corporation or other private group entity ☐ Government

4a. The following fee(s) are submitted:
- ☒ Issue Fee
- ☐ Publication Fee (No small entity discount permitted)
- ☐ Advance Order - # of Copies .....

4b. Payment of Fee(s): **(Please first reapply any previously paid issue fee shown above)**
- ☐ A check is enclosed.
- ☐ Payment by credit card. Form PTO-2038 is attached.
- ☒ The director is hereby authorized to charge the required fee(s), any deficiency, or credits any overpayment, to Deposit Account Number 500831 (enclose an extra copy of this form).

5. **Change in Entity Status** (from status indicated above)
- ☐ Applicant certifying micro entity status. See 37 CFR 1.29 — NOTE: Absent a valid certification of Micro Entity Status (see forms PTO/SB/15A and 15B), issue fee payment in the micro entity amount will not be accepted at the risk of application abandonment.
- ☐ Applicant asserting small entity status. See 37 CFR 1.27 — NOTE: If the application was previously under micro entity status, checking this box will be taken to be a notification of loss of entitlement to micro entity status.
- ☐ Applicant changing to regular undiscounted fee status. — NOTE: Checking this box will be taken to be a notification of loss of entitlement to small or micro entity status, as applicable.

NOTE: This form must be signed in accordance with 37 CFR 1.31 and 1.33. See 37 CFR 1.4 for signature requirements and certifications.

Authorized Signature: Bridace Powell — Date: 05 April 2017
Typed or printed name: Bridace Powell — Registration No. .....



PTOL-85 Part B (10-13) Approved for use through 10/31/2013. OMB 0651-0033 U.S. Patent and Trademark Office; U.S. DEPARTMENT OF COMMERCE

Microchip Ex. 1006, p. 182
Microchip v. Aptiv
IPR2024-00495

# Electronic Acknowledgement Receipt

| | |
|---|---|
| **EFS ID:** | 28836288 |
| **Application Number:** | 15257096 |
| **International Application Number:** | |
| **Confirmation Number:** | 3519 |
| **Title of Invention:** | FLEXIBLE MOBILE DEVICE CONNECTIVITY TO AUTOMOTIVE SYSTEMS WITH USB HUBS |
| **First Named Inventor/Applicant Name:** | Robert M. Voto |
| **Customer Number:** | 22851 |
| **Filer:** | Lawrence Dean Hazelton/Kandace Powell |
| **Filer Authorized By:** | Lawrence Dean Hazelton |
| **Attorney Docket Number:** | DP-322037 CIP |
| **Receipt Date:** | 05-APR-2017 |
| **Filing Date:** | 06-SEP-2016 |
| **Time Stamp:** | 11:09:34 |
| **Application Type:** | Utility under 35 USC 111(a) |

## Payment information:

| | |
|---|---|
| Submitted with Payment | no |

## File Listing:

| Document Number | Document Description | File Name | File Size(Bytes)/ Message Digest | Multi Part /.zip | Pages (if appl.) |
|---|---|---|---|---|---|
| 1 | Issue Fee Payment (PTO-85B) | DP322037CIP_PTOL_85_SIGNED.pdf | 146450<br>9e05959408d6ae70d97fc00b15d65f4d7b0708f3 | no | 1 |

**Warnings:**

| The page size in the PDF is too large. The pages should be 8.5 x 11 or A4. If this PDF is submitted, the pages will be resized upon entry into the Image File Wrapper and may affect subsequent processing | |
|---|---|
| **Information:** | |
| **Total Files Size (in bytes):** | 146450 |

**This Acknowledgement Receipt evidences receipt on the noted date by the USPTO of the indicated documents, characterized by the applicant, and including page counts, where applicable. It serves as evidence of receipt similar to a Post Card, as described in MPEP 503.**

**New Applications Under 35 U.S.C. 111**
**If a new application is being filed and the application includes the necessary components for a filing date (see 37 CFR 1.53(b)-(d) and MPEP 506), a Filing Receipt (37 CFR 1.54) will be issued in due course and the date shown on this Acknowledgement Receipt will establish the filing date of the application.**

**National Stage of an International Application under 35 U.S.C. 371**
**If a timely submission to enter the national stage of an international application is compliant with the conditions of 35 U.S.C. 371 and other applicable requirements a Form PCT/DO/EO/903 indicating acceptance of the application as a national stage submission under 35 U.S.C. 371 will be issued in addition to the Filing Receipt, in due course.**

**New International Application Filed with the USPTO as a Receiving Office**
**If a new international application is being filed and the international application includes the necessary components for an international filing date (see PCT Article 11 and MPEP 1810), a Notification of the International Application Number and of the International Filing Date (Form PCT/RO/105) will be issued in due course, subject to prescriptions concerning national security, and the date shown on this Acknowledgement Receipt will establish the international filing date of the application.**

17W

OPAP
APR 0 5 2017
PATENT & TRADEMARK OFFICE

# PART B - FEE(S) TRANSMITTAL

Complete and send this form, together with applicable fee(s), to: Mail Mail Stop ISSUE FEE
Commissioner for Patents
P.O. Box 1450
Alexandria, Virginia 22313-1450
or Fax (571)-273-2885

INSTRUCTIONS: This form should be used for transmitting the ISSUE FEE and PUBLICATION FEE (if required). Blocks 1 through 5 should be completed where appropriate. All further correspondence including the Patent, advance orders and notification of maintenance fees will be mailed to the current correspondence address as indicated unless corrected below or directed otherwise in Block 1, by (a) specifying a new correspondence address; and/or (b) indicating a separate "FEE ADDRESS" for maintenance fee notifications.

CURRENT CORRESPONDENCE ADDRESS (Note: Use Block 1 for any change of address)

22851 7590 04/11/2017
Delphi Technologies, Inc.
P.O. Box 5052
M/C 483-400-402
Troy, MI 48007-5052

04/05/2017 INTEFSW 00007834 15257096
01 FC:1501 960.00 DA

Note: A certificate of mailing can only be used for domestic mailings of the Fee(s) Transmittal. This certificate cannot be used for any other accompanying papers. Each additional paper, such as an assignment or formal drawing, must have its own certificate of mailing or transmission.

**Certificate of Mailing or Transmission**
I hereby certify that this Fee(s) Transmittal is being deposited with the United States Postal Service with sufficient postage for first class mail in an envelope addressed to the Mail Stop ISSUE FEE address above, or being facsimile transmitted to the USPTO (571) 273-2885, on the date indicated below.

(Depositor's name)
(Signature)
(Date)

| APPLICATION NO. | FILING DATE | FIRST NAMED INVENTOR | ATTORNEY DOCKET NO. | CONFIRMATION NO. |
|---|---|---|---|---|
| 15/257,096 | 09/06/2016 | Robert M. Voto | DP-322037 CIP | 3519 |

TITLE OF INVENTION: FLEXIBLE MOBILE DEVICE CONNECTIVITY TO AUTOMOTIVE SYSTEMS WITH USB HUBS

| APPLN. TYPE | ENTITY STATUS | ISSUE FEE DUE | PUBLICATION FEE DUE | PREV. PAID ISSUE FEE | TOTAL FEE(S) DUE | DATE DUE |
|---|---|---|---|---|---|---|
| nonprovisional | UNDISCOUNTED | $960 | $0 | $0 | $960 | 04/11/2017 |

| EXAMINER | ART UNIT | CLASS-SUBCLASS |
|---|---|---|
| UNELUS, ERNEST | 2181 | 710-014000 |

1. Change of correspondence address or indication of "Fee Address" (37 CFR 1.363).
- ☐ Change of correspondence address (or Change of Correspondence Address form PTO/SB/122) attached.
- ☐ "Fee Address" indication (or "Fee Address" Indication form PTO/SB/47; Rev 03-02 or more recent) attached. Use of a Customer Number is required.

2. For printing on the patent front page, list
(1) The names of up to 3 registered patent attorneys or agents OR, alternatively,
(2) The name of a single firm (having as a member a registered attorney or agent) and the names of up to 2 registered patent attorneys or agents. If no name is listed, no name will be printed.
1. Robert J. Myers
2.
3.

3. ASSIGNEE NAME AND RESIDENCE DATA TO BE PRINTED ON THE PATENT (print or type)

PLEASE NOTE: Unless an assignee is identified below, no assignee data will appear on the patent. If an assignee is identified below, the document has been filed for recordation as set forth in 37 CFR 3.11. Completion of this form is NOT a substitute for filing an assignment.

(A) NAME OF ASSIGNEE: Delphi Technologies, Inc.
(B) RESIDENCE: (CITY and STATE OR COUNTRY): Troy, MI

Please check the appropriate assignee category or categories (will not be printed on the patent): ☐ Individual ☒ Corporation or other private group entity ☐ Government

4a. The following fee(s) are submitted:
- ☒ Issue Fee
- ☐ Publication Fee (No small entity discount permitted)
- ☐ Advance Order - # of Copies .....

4b. Payment of Fee(s): (Please first reapply any previously paid issue fee shown above)
- ☐ A check is enclosed.
- ☐ Payment by credit card. Form PTO-2038 is attached.
- ☒ The director is hereby authorized to charge the required fee(s), any deficiency, or credits any overpayment, to Deposit Account Number 500531 (enclose an extra copy of this form).

5. Change in Entity Status (from status indicated above)
- ☐ Applicant certifying micro entity status. See 37 CFR 1.29 — NOTE: Absent a valid certification of Micro Entity Status (see forms PTO/SB/15A and 15B), issue fee payment in the micro entity amount will not be accepted at the risk of application abandonment.
- ☐ Applicant asserting small entity status. See 37 CFR 1.27 — NOTE: If the application was previously under micro entity status, checking this box will be taken to be a notification of loss of entitlement to micro entity status.
- ☐ Applicant changing to regular undiscounted fee status. — NOTE: Checking this box will be taken to be a notification of loss of entitlement to small or micro entity status, as applicable.

NOTE: This form must be signed in accordance with 37 CFR 1.31 and 1.33. See 37 CFR 1.4 for signature requirements and certifications.

Authorized Signature: Candace Powell — Date: 05 April 2017
Typed or printed name: Candace Powell — Registration No.:





Microchip Ex. 1006, p. 185
Microchip v. Aptiv
IPR2024-00495

UNITED STATES PATENT AND TRADEMARK OFFICE

UNITED STATES DEPARTMENT OF COMMERCE
United States Patent and Trademark Office
Address: COMMISSIONER FOR PATENTS
P.O. Box 1450
Alexandria, Virginia 22313-1450
www.uspto.gov

| APPLICATION NO. | ISSUE DATE | PATENT NO. | ATTORNEY DOCKET NO. | CONFIRMATION NO. |
|---|---|---|---|---|
| 15/257,096 | 05/09/2017 | 9645962 | DP-322037 CIP | 3519 |

22851 7590 04/19/2017
Delphi Technologies, Inc.
P.O. Box 5052
M/C 483-400-402
Troy, MI 48007-5052

# ISSUE NOTIFICATION

The projected patent number and issue date are specified above.

**Determination of Patent Term Adjustment under 35 U.S.C. 154 (b)**
(application filed on or after May 29, 2000)

The Patent Term Adjustment is 0 day(s). Any patent to issue from the above-identified application will include an indication of the adjustment on the front page.

If a Continued Prosecution Application (CPA) was filed in the above-identified application, the filing date that determines Patent Term Adjustment is the filing date of the most recent CPA.

Applicant will be able to obtain more detailed information by accessing the Patent Application Information Retrieval (PAIR) WEB site (http://pair.uspto.gov).

Any questions regarding the Patent Term Extension or Adjustment determination should be directed to the Office of Patent Legal Administration at (571)-272-7702. Questions relating to issue and publication fee payments should be directed to the Application Assistance Unit (AAU) of the Office of Data Management (ODM) at (571)-272-4200.

APPLICANT(s) (Please see PAIR WEB site http://pair.uspto.gov for additional applicants):

DELPHI TECHNOLOGIES, INC., TROY, MI;
Robert M. Voto, Clarkston, MI;
Shyambabu Yeda, Rochester Hills, MI;
Craig Allan Petku, Clarkston, MI;

The United States represents the largest, most dynamic marketplace in the world and is an unparalleled location for business investment, innovation, and commercialization of new technologies. The USA offers tremendous resources and advantages for those who invest and manufacture goods here. Through SelectUSA, our nation works to encourage and facilitate business investment. To learn more about why the USA is the best country in the world to develop technology, manufacture products, and grow your business, visit SelectUSA.gov.

IR103 (Rev. 10/09)

**IN THE UNITED STATES PATENT AND TRADEMARK OFFICE**

| | | | |
|---|---|---|---|
| Appl. No. | : | 15/257,096 | Confirmation No. 3519 |
| Applicant | : | Delphi Technologies, Inc. | |
| Inventors | : | Robert Voto, et al. | |
| Filed | : | 09/06/2016 | |
| TC/AU | : | 2181 | |
| Examiner | : | Ernest Unelus | |
| Docket No. | : | DP-322037 CIP | |
| Title | : | Flexible Mobile Device Connectivity to Automotive Systems with USB Hubs | |

**TRANSMITTAL LETTER**

Commissioner for Patents
P. O. Box 1450
Alexandria, VA 22313-1450

Dear Sir:

Attached is an amended Application Data Sheet for the above referenced application amending the name of Inventor Craig Petku with underlined text indicating insertions and strike through text indicating deletions.

The Commissioner is hereby authorized to charge any fees associated with this communication and/or credit any overpayments to Delphi Technologies, Inc., Deposit Account No. 50-0831.

Respectfully submitted,
/Robert J. Myers/
Robert J. Myers
Reg. No. 69,783
Delphi Technologies, Inc.
Legal Staff – M/C 483-400-402
P.O. Box 5052
Troy, Michigan 48007-5052
(248) 813-2512
bob.myers@delphi.com

Under the Paperwork Reduction Act of 1995, no persons are required to respond to a collection of information unless it contains a valid OMB control number

| Application Data Sheet 37 CFR 1.76 | Attorney Docket Number | DP-322037 CIP |
|---|---|---|
| | Application Number | |

| Title of Invention | FLEXIBLE MOBILE DEVICE CONNECTIVITY TO AUTOMOTIVE SYSTEMS WITH USB HUBS |
|---|---|

The application data sheet is part of the provisional or nonprovisional application for which it is being submitted. The following form contains the bibliographic data arranged in a format specified by the United States Patent and Trademark Office as outlined in 37 CFR 1.76.
This document may be completed electronically and submitted to the Office in electronic format using the Electronic Filing System (EFS) or the document may be printed and included in a paper filed application.

## Secrecy Order 37 CFR 5.2:

☐ Portions or all of the application associated with this Application Data Sheet may fall under a Secrecy Order pursuant to 37 CFR 5.2 (Paper filers only. Applications that fall under Secrecy Order may not be filed electronically.)

## Inventor Information:

**Inventor 1** Remove

**Legal Name**

| Prefix | Given Name | Middle Name | Family Name | Suffix |
|---|---|---|---|---|
| | Robert | M. | Voto | |

**Residence Information (Select One)** ◉ US Residency ○ Non US Residency ○ Active US Military Service

| City | Clarkston | State/Province | MI | Country of Residence | US |
|---|---|---|---|---|---|

**Mailing Address of Inventor:**

| | |
|---|---|
| Address 1 | 7054 Oakhurst Ridge |
| Address 2 | |

| City | Clarkston | State/Province | MI |
|---|---|---|---|
| Postal Code | 48348 | Country i | US |

**Inventor 2** Remove

**Legal Name**

| Prefix | Given Name | Middle Name | Family Name | Suffix |
|---|---|---|---|---|
| | Shyambabu | | Yeda | |

**Residence Information (Select One)** ◉ US Residency ○ Non US Residency ○ Active US Military Service

| City | Rochester Hills | State/Province | MI | Country of Residence | US |
|---|---|---|---|---|---|

**Mailing Address of Inventor:**

| | |
|---|---|
| Address 1 | 2134 Cattail Circle |
| Address 2 | |

| City | Rochester Hills | State/Province | MI |
|---|---|---|---|
| Postal Code | 46309 | Country i | US |

**Inventor 3** Remove

**Legal Name**

| Prefix | Given Name | Middle Name | Family Name | Suffix |
|---|---|---|---|---|
| | Craig | [redacted] | Petku | |

**Residence Information (Select One)** ◉ US Residency ○ Non US Residency ○ Active US Military Service

Under the Paperwork Reduction Act of 1995, no persons are required to respond to a collection of information unless it contains a valid OMB control number.

| Application Data Sheet 37 CFR 1.76 | Attorney Docket Number | DP-322037 CIP |
|---|---|---|
| | Application Number | |
| Title of Invention | FLEXIBLE MOBILE DEVICE CONNECTIVITY TO AUTOMOTIVE SYSTEMS WITH USB HUBS | |

| City | Clarkston | State/Province | MI | Country of Residence | US |
|---|---|---|---|---|---|

**Mailing Address of Inventor:**

| | | | |
|---|---|---|---|
| **Address 1** | 5188 Iroquois Court | | |
| **Address 2** | | | |
| **City** | Clarkston | **State/Province** | MI |
| **Postal Code** | 48348 | **Country** | US |

All Inventors Must Be Listed - Additional Inventor Information blocks may be generated within this form by selecting the **Add** button. Add

## Correspondence Information:

**Enter either Customer Number or complete the Correspondence Information section below. For further information see 37 CFR 1.33(a).**

☐ **An Address is being provided for the correspondence Information of this application.**

| | | | |
|---|---|---|---|
| **Customer Number** | 22851 | | |
| **Email Address** | | Add Email | Remove Email |

## Application Information:

| | | | |
|---|---|---|---|
| **Title of the Invention** | FLEXIBLE MOBILE DEVICE CONNECTIVITY TO AUTOMOTIVE SYSTEMS WITH USB HUBS | | |
| **Attorney Docket Number** | DP-322037 CIP | **Small Entity Status Claimed** | ☐ |
| **Application Type** | Nonprovisional | | |
| **Subject Matter** | Utility | | |
| **Total Number of Drawing Sheets (if any)** | 10 | **Suggested Figure for Publication (if any)** | |

## Filing By Reference:

Only complete this section when filing an application by reference under 35 U.S.C. 111(c) and 37 CFR 1.57(a). Do not complete this section if application papers including a specification and any drawings are being filed. Any domestic benefit or foreign priority information must be provided in the appropriate section(s) below (i.e., "Domestic Benefit/National Stage Information" and "Foreign Priority Information").

For the purposes of a filing date under 37 CFR 1.53(b), the description and any drawings of the present application are replaced by this reference to the previously filed application, subject to conditions and requirements of 37 CFR 1.57(a).

| Application number of the previously filed application | Filing date (YYYY-MM-DD) | Intellectual Property Authority or Country |
|---|---|---|
| | | |

## Publication Information:

☐ Request Early Publication (Fee required at time of Request 37 CFR 1.219)

☐ **Request Not to Publish.** I hereby request that the attached application not be published under 35 U.S.C. 122(b) and certify that the invention disclosed in the attached application **has not and will not** be the subject of an application filed in another country, or under a multilateral international agreement, that requires publication at eighteen months after filing.

Under the Paperwork Reduction Act of 1995, no persons are required to respond to a collection of information unless it contains a valid OMB control number

| Application Data Sheet 37 CFR 1.76 | Attorney Docket Number | DP-322037 CIP |
|---|---|---|
| | Application Number | |
| Title of Invention | FLEXIBLE MOBILE DEVICE CONNECTIVITY TO AUTOMOTIVE SYSTEMS WITH USB HUBS | |

## Representative Information:

Representative information should be provided for all practitioners having a power of attorney in the application. Providing this information in the Application Data Sheet does not constitute a power of attorney in the application (see 37 CFR 1.32).
Either enter Customer Number or complete the Representative Name section below. If both sections are completed the customer Number will be used for the Representative Information during processing.

| | | | |
|---|---|---|---|
| Please Select One: | ◉ Customer Number | ◯ US Patent Practitioner | ◯ Limited Recognition (37 CFR 11.9) |
| Customer Number | 22851 | | |

## Domestic Benefit/National Stage Information:

This section allows for the applicant to either claim benefit under 35 U.S.C. 119(e), 120, 121, 365(c), or 386(c) or indicate National Stage entry from a PCT application. Providing benefit claim information in the Application Data Sheet constitutes the specific reference required by 35 U.S.C. 119(e) or 120, and 37 CFR 1.78.
When referring to the current application, please leave the "Application Number" field blank.

| Prior Application Status | Pending | | Remove |
|---|---|---|---|
| Application Number | Continuity Type | Prior Application Number | Filing or 371(c) Date (YYYY-MM-DD) |
| | Continuation in part of | 14487947 | 2014-09-16 |
| Prior Application Status | | | Remove |
| Application Number | Continuity Type | Prior Application Number | Filing or 371(c) Date (YYYY-MM-DD) |
| 14487947 | Claims benefit of provisional | 61882915 | 2013-09-26 |

Additional Domestic Benefit/National Stage Data may be generated within this form by selecting the **Add** button.

## Foreign Priority Information:

This section allows for the applicant to claim priority to a foreign application. Providing this information in the application data sheet constitutes the claim for priority as required by 35 U.S.C. 119(b) and 37 CFR 1.55. When priority is claimed to a foreign application that is eligible for retrieval under the priority document exchange program (PDX)[1] the information will be used by the Office to automatically attempt retrieval pursuant to 37 CFR 1.55(i)(1) and (2). Under the PDX program, applicant bears the ultimate responsibility for ensuring that a copy of the foreign application is received by the Office from the participating foreign intellectual property office, or a certified copy of the foreign priority application is filed, within the time period specified in 37 CFR 1.55(g)(1).

Under the Paperwork Reduction Act of 1995, no persons are required to respond to a collection of information unless it contains a valid OMB control number.

| Application Data Sheet 37 CFR 1.76 | Attorney Docket Number | DP-322037 CIP |
|---|---|---|
| | Application Number | |
| Title of Invention | FLEXIBLE MOBILE DEVICE CONNECTIVITY TO AUTOMOTIVE SYSTEMS WITH USB HUBS | |

Remove

| Application Number | Country[i] | Filing Date (YYYY-MM-DD) | Access Code[i] (if applicable) |
|---|---|---|---|
| | | | |

Additional Foreign Priority Data may be generated within this form by selecting the **Add** button.

## Statement under 37 CFR 1.55 or 1.78 for AIA (First Inventor to File) Transition Applications

☐ This application (1) claims priority to or the benefit of an application filed before March 16, 2013 and (2) also contains, or contained at any time, a claim to a claimed invention that has an effective filing date on or after March 16, 2013.
NOTE: By providing this statement under 37 CFR 1.55 or 1.78, this application, with a filing date on or after March 16, 2013, will be examined under the first inventor to file provisions of the AIA.

| Application Data Sheet 37 CFR 1.76 | Attorney Docket Number | DP-322037 CIP |
|---|---|---|
| | Application Number | |
| Title of Invention | FLEXIBLE MOBILE DEVICE CONNECTIVITY TO AUTOMOTIVE SYSTEMS WITH USB HUBS | |

## Authorization or Opt-Out of Authorization to Permit Access:

When this Application Data Sheet is properly signed and filed with the application, applicant has provided written authority to permit a participating foreign intellectual property (IP) office access to the instant application-as-filed (see paragraph A in subsection 1 below) and the European Patent Office (EPO) access to any search results from the instant application (see paragraph B in subsection 1 below).

Should applicant choose not to provide an authorization identified in subsection 1 below, applicant **must opt-out** of the authorization by checking the corresponding box A or B or both in subsection 2 below.

**NOTE**: This section of the Application Data Sheet is **ONLY** reviewed and processed with the **INITIAL** filing of an application. After the initial filing of an application, an Application Data Sheet cannot be used to provide or rescind authorization for access by a foreign IP office(s). Instead, Form PTO/SB/39 or PTO/SB/69 must be used as appropriate.

**1. Authorization to Permit Access by a Foreign Intellectual Property Office(s)**

A. **Priority Document Exchange (PDX)** - Unless box A in subsection 2 (opt-out of authorization) is checked, the undersigned hereby **grants the USPTO authority** to provide the European Patent Office (EPO), the Japan Patent Office (JPO), the Korean Intellectual Property Office (KIPO), the State Intellectual Property Office of the People's Republic of China (SIPO), the World Intellectual Property Organization (WIPO), and any other foreign intellectual property office participating with the USPTO in a bilateral or multilateral priority document exchange agreement in which a foreign application claiming priority to the instant patent application is filed, access to: (1) the instant patent application-as-filed and its related bibliographic data, (2) any foreign or domestic application to which priority or benefit is claimed by the instant application and its related bibliographic data, and (3) the date of filing of this Authorization. See 37 CFR 1.14(h)(1).

B. **Search Results from U.S. Application to EPO** - Unless box B in subsection 2 (opt-out of authorization) is checked, the undersigned hereby **grants the USPTO authority** to provide the EPO access to the bibliographic data and search results from the instant patent application when a European patent application claiming priority to the instant patent application is filed. See 37 CFR 1.14(h)(2).

The applicant is reminded that the EPO's Rule 141(1) EPC (European Patent Convention) requires applicants to submit a copy of search results from the instant application without delay in a European patent application that claims priority to the instant application.

**2. Opt-Out of Authorizations to Permit Access by a Foreign Intellectual Property Office(s)**

☐ A. Applicant **DOES NOT** authorize the USPTO to permit a participating foreign IP office access to the instant application-as-filed. If this box is checked, the USPTO will not be providing a participating foreign IP office with any documents and information identified in subsection 1A above.

☐ B. Applicant **DOES NOT** authorize the USPTO to transmit to the EPO any search results from the instant patent application. If this box is checked, the USPTO will not be providing the EPO with search results from the instant application.

**NOTE:** Once the application has published or is otherwise publicly available, the USPTO may provide access to the application in accordance with 37 CFR 1.14.

Under the Paperwork Reduction Act of 1995, no persons are required to respond to a collection of information unless it contains a valid OMB control number.

| Application Data Sheet 37 CFR 1.76 | Attorney Docket Number | DP-322037 CIP |
|---|---|---|
| | Application Number | |
| Title of Invention | FLEXIBLE MOBILE DEVICE CONNECTIVITY TO AUTOMOTIVE SYSTEMS WITH USB HUBS | |

## Applicant Information:

Providing assignment information in this section does not substitute for compliance with any requirement of part 3 of Title 37 of CFR to have an assignment recorded by the Office.

**Applicant 1**

If the applicant is the inventor (or the remaining joint inventor or inventors under 37 CFR 1.45), this section should not be completed. The information to be provided in this section is the name and address of the legal representative who is the applicant under 37 CFR 1.43; or the name and address of the assignee, person to whom the inventor is under an obligation to assign the invention, or person who otherwise shows sufficient proprietary interest in the matter who is the applicant under 37 CFR 1.46. If the applicant is an applicant under 37 CFR 1.46 (assignee, person to whom the inventor is obligated to assign, or person who otherwise shows sufficient proprietary interest) together with one or more joint inventors, then the joint inventor or inventors who are also the applicant should be identified in this section.

Clear

(●) Assignee ( ) Legal Representative under 35 U.S.C. 117 ( ) Joint Inventor

( ) Person to whom the inventor is obligated to assign. ( ) Person who shows sufficient proprietary interest

If applicant is the legal representative, indicate the authority to file the patent application, the inventor is:

Name of the Deceased or Legally Incapacitated Inventor:

If the Applicant is an Organization check here. ☑

| Organization Name | DELPHI TECHNOLOGIES, INC. | | |
|---|---|---|---|
| **Mailing Address Information For Applicant:** | | | |
| **Address 1** | P. O. BOX 5052 | | |
| Address 2 | M/C: 483-400-402 | | |
| **City** | TROY | **State/Province** | MI |
| **Country** | US | Postal Code | 48007-5052 |
| Phone Number | | Fax Number | |
| Email Address | | | |

Additional Applicant Data may be generated within this form by selecting the Add button.

## Assignee Information including Non-Applicant Assignee Information:

Providing assignment information in this section does not substitute for compliance with any requirement of part 3 of Title 37 of CFR to have an assignment recorded by the Office.

Under the Paperwork Reduction Act of 1995, no persons are required to respond to a collection of information unless it contains a valid OMB control number.

| Application Data Sheet 37 CFR 1.76 | Attorney Docket Number | DP-322037 CIP |
|---|---|---|
| | Application Number | |
| Title of Invention | FLEXIBLE MOBILE DEVICE CONNECTIVITY TO AUTOMOTIVE SYSTEMS WITH USB HUBS | |

**Assignee 1**

Complete this section if assignee information, including non-applicant assignee information, is desired to be included on the patent application publication. An assignee-applicant identified in the "Applicant Information" section will appear on the patent application publication as an applicant. For an assignee-applicant, complete this section only if identification as an assignee is also desired on the patent application publication.

If the Assignee or Non-Applicant Assignee is an Organization check here. ☐

| Prefix | **Given Name** | Middle Name | **Family Name** | Suffix |
|---|---|---|---|---|
| | | | | |

**Mailing Address Information For Assignee including Non-Applicant Assignee:**

| | | | |
|---|---|---|---|
| **Address 1** | | | |
| Address 2 | | | |
| **City** | | **State/Province** | |
| **Country** | | Postal Code | |
| Phone Number | | Fax Number | |
| Email Address | | | |

Additional Assignee or Non-Applicant Assignee Data may be generated within this form by selecting the Add button.

## Signature:

**NOTE:** This Application Data Sheet must be signed in accordance with 37 CFR 1.33(b). **However, if this Application Data Sheet is submitted with the INITIAL filing of the application and either box A or B is not checked in subsection 2 of the "Authorization or Opt-Out of Authorization to Permit Access" section, then this form must also be signed in accordance with 37 CFR 1.14(c).**

This Application Data Sheet **must** be signed by a patent practitioner if one or more of the applicants is a **juristic entity** (e.g., corporation or association). If the applicant is two or more joint inventors, this form must be signed by a patent practitioner, **all** joint inventors who are the applicant, or one or more joint inventor-applicants who have been given power of attorney (e.g., see USPTO Form PTO/AIA/81) on behalf of **all** joint inventor-applicants.

See 37 CFR 1.4(d) for the manner of making signatures and certifications.

| **Signature** | /Robert J. Myers/ | | | Date (YYYY-MM-DD) | 2016-09-06 |
|---|---|---|---|---|---|
| First Name | Robert | Last Name | Myers | Registration Number | 69783 |

Additional Signature may be generated within this form by selecting the Add button.

Under the Paperwork Reduction Act of 1995, no persons are required to respond to a collection of information unless it contains a valid OMB control number.

| Application Data Sheet 37 CFR 1.76 | Attorney Docket Number | DP-322037 CIP |
|---|---|---|
| | Application Number | |
| Title of Invention | FLEXIBLE MOBILE DEVICE CONNECTIVITY TO AUTOMOTIVE SYSTEMS WITH USB HUBS | |

This collection of information is required by 37 CFR 1.76. The information is required to obtain or retain a benefit by the public which is to file (and by the USPTO to process) an application. Confidentiality is governed by 35 U.S.C. 122 and 37 CFR 1.14. This collection is estimated to take 23 minutes to complete, including gathering, preparing, and submitting the completed application data sheet form to the USPTO. Time will vary depending upon the individual case. Any comments on the amount of time you require to complete this form and/or suggestions for reducing this burden, should be sent to the Chief Information Officer, U.S. Patent and Trademark Office, U.S. Department of Commerce, P.O. Box 1450, Alexandria, VA 22313-1450. DO NOT SEND FEES OR COMPLETED FORMS TO THIS ADDRESS. **SEND TO: Commissioner for Patents, P.O. Box 1450, Alexandria, VA 22313-1450.**

# Privacy Act Statement

The Privacy Act of 1974 (P.L. 93-579) requires that you be given certain information in connection with your submission of the attached form related to a patent application or patent. Accordingly, pursuant to the requirements of the Act, please be advised that: (1) the general authority for the collection of this information is 35 U.S.C. 2(b)(2); (2) furnishing of the information solicited is voluntary; and (3) the principal purpose for which the information is used by the U.S. Patent and Trademark Office is to process and/or examine your submission related to a patent application or patent. If you do not furnish the requested information, the U.S. Patent and Trademark Office may not be able to process and/or examine your submission, which may result in termination of proceedings or abandonment of the application or expiration of the patent.

The information provided by you in this form will be subject to the following routine uses:

1. The information on this form will be treated confidentially to the extent allowed under the Freedom of Information Act (5 U.S.C. 552) and the Privacy Act (5 U.S.C. 552a). Records from this system of records may be disclosed to the Department of Justice to determine whether the Freedom of Information Act requires disclosure of these records.

2. A record from this system of records may be disclosed, as a routine use, in the course of presenting evidence to a court, magistrate, or administrative tribunal, including disclosures to opposing counsel in the course of settlement negotiations.

3. A record in this system of records may be disclosed, as a routine use, to a Member of Congress submitting a request involving an individual, to whom the record pertains, when the individual has requested assistance from the Member with respect to the subject matter of the record.

4. A record in this system of records may be disclosed, as a routine use, to a contractor of the Agency having need for the information in order to perform a contract. Recipients of information shall be required to comply with the requirements of the Privacy Act of 1974, as amended, pursuant to 5 U.S.C. 552a(m).

5. A record related to an International Application filed under the Patent Cooperation Treaty in this system of records may be disclosed, as a routine use, to the International Bureau of the World Intellectual Property Organization, pursuant to the Patent CooperationTreaty.

6. A record in this system of records may be disclosed, as a routine use, to another federal agency for purposes of National Security review (35 U.S.C. 181) and for review pursuant to the Atomic Energy Act (42 U.S.C. 218(c)).

7. A record from this system of records may be disclosed, as a routine use, to the Administrator, General Services, or his/her designee, during an inspection of records conducted by GSA as part of that agency's responsibility to recommend improvements in records management practices and programs, under authority of 44 U.S.C. 2904 and 2906. Such disclosure shall be made in accordance with the GSA regulations governing inspection of records for this purpose, and any other relevant (i.e., GSA or Commerce) directive. Such disclosure shall not be used to make determinations about individuals.

8. A record from this system of records may be disclosed, as a routine use, to the public after either publication of the application pursuant to 35 U.S.C. 122(b) or issuance of a patent pursuant to 35 U.S.C. 151. Further, a record may be disclosed, subject to the limitations of 37 CFR 1.14, as a routine use, to the public if the record was filed in an application which became abandoned or in which the proceedings were terminated and which application is referenced by either a published application, an application open to public inspections or an issued patent.

9. A record from this system of records may be disclosed, as a routine use, to a Federal, State, or local law enforcement agency, if the USPTO becomes aware of a violation or potential violation of law or regulation.

# Electronic Acknowledgement Receipt

| | |
|---|---|
| **EFS ID:** | 29005782 |
| **Application Number:** | 15257096 |
| **International Application Number:** | |
| **Confirmation Number:** | 3519 |
| **Title of Invention:** | FLEXIBLE MOBILE DEVICE CONNECTIVITY TO AUTOMOTIVE SYSTEMS WITH USB HUBS |
| **First Named Inventor/Applicant Name:** | Robert M. Voto |
| **Customer Number:** | 22851 |
| **Filer:** | Lawrence Dean Hazelton/Kandace Powell |
| **Filer Authorized By:** | Lawrence Dean Hazelton |
| **Attorney Docket Number:** | DP-322037 CIP |
| **Receipt Date:** | 24-APR-2017 |
| **Filing Date:** | 06-SEP-2016 |
| **Time Stamp:** | 13:58:00 |
| **Application Type:** | Utility under 35 USC 111(a) |

## Payment information:

| | |
|---|---|
| Submitted with Payment | no |

## File Listing:

| Document Number | Document Description | File Name | File Size(Bytes)/ Message Digest | Multi Part /.zip | Pages (if appl.) |
|---|---|---|---|---|---|
| 1 | Transmittal Letter | DP322037CIP_Trans_Ltr_Corr_ADS_24APR17.pdf | 13839<br>5bd46bd916e4968c1dc3e6add096c804380ace29 | no | 1 |

**Warnings:**

| Information: | | | | | |
|---|---|---|---|---|---|
| 2 | Application Data Sheet | DP322037CIP_Corrected_ADS.pdf | 563857<br>a560d0dbda855dd83818649943043e710736877c | no | 9 |

**Warnings:**

**Information:**

This is not an USPTO supplied ADS fillable form

The page size in the PDF is too large. The pages should be 8.5 x 11 or A4. If this PDF is submitted, the pages will be resized upon entry into the Image File Wrapper and may affect subsequent processing

| **Total Files Size (in bytes):** | 577696 |
|---|---|

**This Acknowledgement Receipt evidences receipt on the noted date by the USPTO of the indicated documents, characterized by the applicant, and including page counts, where applicable. It serves as evidence of receipt similar to a Post Card, as described in MPEP 503.**

**New Applications Under 35 U.S.C. 111**
**If a new application is being filed and the application includes the necessary components for a filing date (see 37 CFR 1.53(b)-(d) and MPEP 506), a Filing Receipt (37 CFR 1.54) will be issued in due course and the date shown on this Acknowledgement Receipt will establish the filing date of the application.**
**National Stage of an International Application under 35 U.S.C. 371**
**If a timely submission to enter the national stage of an international application is compliant with the conditions of 35 U.S.C. 371 and other applicable requirements a Form PCT/DO/EO/903 indicating acceptance of the application as a national stage submission under 35 U.S.C. 371 will be issued in addition to the Filing Receipt, in due course.**
**New International Application Filed with the USPTO as a Receiving Office**
**If a new international application is being filed and the international application includes the necessary components for an international filing date (see PCT Article 11 and MPEP 1810), a Notification of the International Application Number and of the International Filing Date (Form PCT/RO/105) will be issued in due course, subject to prescriptions concerning national security, and the date shown on this Acknowledgement Receipt will establish the international filing date of the application.**

# PATENT ASSIGNMENT COVER SHEET

Electronic Version v1.1
Stylesheet Version v1.2

EPAS ID: PAT5157768

| | |
|---|---|
| **SUBMISSION TYPE:** | NEW ASSIGNMENT |
| **NATURE OF CONVEYANCE:** | ASSIGNMENT |

**CONVEYING PARTY DATA**

| Name | Execution Date |
|---|---|
| DELPHI TECHNOLOGIES INC. | 01/01/2018 |

**RECEIVING PARTY DATA**

| | |
|---|---|
| **Name:** | APTIV TECHNOLOGIES LIMITED |
| **Street Address:** | ERIN COURT, BISHOP'S COURT HILL |
| **City:** | ST. MICHAEL |
| **State/Country:** | BARBADOS |

**PROPERTY NUMBERS Total: 966**

| Property Type | Number |
|---|---|
| **Patent Number:** | 6646845 |
| **Patent Number:** | 6286222 |
| **Patent Number:** | 6401047 |
| **Patent Number:** | 6286221 |
| **Patent Number:** | 6358104 |
| **Patent Number:** | 6246936 |
| **Patent Number:** | 6329779 |
| **Patent Number:** | 6500030 |
| **Patent Number:** | 6575607 |
| **Patent Number:** | 6441726 |
| **Patent Number:** | 6447131 |
| **Patent Number:** | 6407696 |
| **Patent Number:** | 6380757 |
| **Patent Number:** | 6305957 |
| **Patent Number:** | 6356827 |
| **Patent Number:** | 6408784 |
| **Patent Number:** | 6434486 |
| **Patent Number:** | 6404157 |
| **Patent Number:** | 6302552 |
| **Patent Number:** | 6422062 |
| **Patent Number:** | 6404328 |

| Property Type | Number |
|---|---|
| **Patent Number:** | 6469659 |
| **Patent Number:** | 6384355 |
| **Patent Number:** | 6559763 |
| **Patent Number:** | 6613468 |
| **Patent Number:** | 6678166 |
| **Patent Number:** | 6464050 |
| **Patent Number:** | 6662912 |
| **Patent Number:** | 6366153 |
| **Patent Number:** | 6479766 |
| **Patent Number:** | 6723979 |
| **Patent Number:** | 6447132 |
| **Patent Number:** | 6620535 |
| **Patent Number:** | 6692859 |
| **Patent Number:** | 7037615 |
| **Patent Number:** | 6553294 |
| **Patent Number:** | 6828559 |
| **Patent Number:** | 6435530 |
| **Patent Number:** | 6542802 |
| **Patent Number:** | 6453224 |
| **Patent Number:** | 6548914 |
| **Patent Number:** | 7000946 |
| **Patent Number:** | 6542792 |
| **Patent Number:** | 6485337 |
| **Patent Number:** | 6424898 |
| **Patent Number:** | 6554318 |
| **Patent Number:** | 6874378 |
| **Patent Number:** | 6434958 |
| **Patent Number:** | 6873714 |
| **Patent Number:** | 6650252 |
| **Patent Number:** | 6644689 |
| **Patent Number:** | 6583753 |
| **Patent Number:** | 6864015 |
| **Patent Number:** | 7085687 |
| **Patent Number:** | 6761568 |
| **Patent Number:** | 6492938 |
| **Patent Number:** | 6624503 |
| **Patent Number:** | 6850825 |
| **Patent Number:** | 6556166 |

| Property Type | Number |
|---|---|
| **Patent Number:** | 7003032 |
| **Patent Number:** | 8197981 |
| **Patent Number:** | 6533230 |
| **Patent Number:** | 7279243 |
| **Patent Number:** | 7025903 |
| **Patent Number:** | 6860224 |
| **Patent Number:** | 6767411 |
| **Patent Number:** | 6561305 |
| **Patent Number:** | 6564694 |
| **Patent Number:** | 6749038 |
| **Patent Number:** | 6762427 |
| **Patent Number:** | 6438477 |
| **Patent Number:** | 6438476 |
| **Patent Number:** | 6566616 |
| **Patent Number:** | 6578871 |
| **Patent Number:** | 6662094 |
| **Patent Number:** | 6868745 |
| **Patent Number:** | 7352355 |
| **Patent Number:** | 6753780 |
| **Patent Number:** | 6552294 |
| **Patent Number:** | 6605877 |
| **Patent Number:** | 6897819 |
| **Patent Number:** | 6927674 |
| **Patent Number:** | 6897770 |
| **Patent Number:** | 6362731 |
| **Patent Number:** | 6668221 |
| **Patent Number:** | 6714848 |
| **Patent Number:** | 6722922 |
| **Patent Number:** | 6888265 |
| **Patent Number:** | 6692316 |
| **Patent Number:** | 6356851 |
| **Patent Number:** | 6936989 |
| **Patent Number:** | 6650978 |
| **Patent Number:** | 6910827 |
| **Patent Number:** | 6905901 |
| **Patent Number:** | 6803743 |
| **Patent Number:** | 6932769 |
| **Patent Number:** | 6837751 |

| Property Type | Number |
|---|---|
| **Patent Number:** | 6925114 |
| **Patent Number:** | 6663250 |
| **Patent Number:** | 6859144 |
| **Patent Number:** | 7000948 |
| **Patent Number:** | 6683534 |
| **Patent Number:** | 6818842 |
| **Patent Number:** | 6669426 |
| **Patent Number:** | 7324715 |
| **Patent Number:** | 7037349 |
| **Patent Number:** | 7178139 |
| **Patent Number:** | 6847001 |
| **Patent Number:** | 6794987 |
| **Patent Number:** | 7598846 |
| **Patent Number:** | 7133752 |
| **Patent Number:** | 7095501 |
| **Patent Number:** | 6889146 |
| **Patent Number:** | 7252559 |
| **Patent Number:** | 6833535 |
| **Patent Number:** | 6984466 |
| **Patent Number:** | 7435490 |
| **Patent Number:** | 7001682 |
| **Patent Number:** | 7147953 |
| **Patent Number:** | 7144644 |
| **Patent Number:** | 6942942 |
| **Patent Number:** | 6967064 |
| **Patent Number:** | 7279246 |
| **Patent Number:** | 6921596 |
| **Patent Number:** | 7410016 |
| **Patent Number:** | 7422812 |
| **Patent Number:** | 7001685 |
| **Patent Number:** | 7537849 |
| **Patent Number:** | 7131264 |
| **Patent Number:** | 7582375 |
| **Patent Number:** | 7008716 |
| **Patent Number:** | 6997278 |
| **Patent Number:** | 7512461 |
| **Patent Number:** | 7131665 |
| **Patent Number:** | 6739889 |

| Property Type | Number |
|---|---|
| **Patent Number:** | 7202792 |
| **Patent Number:** | 7024294 |
| **Patent Number:** | 7201984 |
| **Patent Number:** | 7412058 |
| **Patent Number:** | 7606327 |
| **Patent Number:** | 6824406 |
| **Patent Number:** | 6886417 |
| **Patent Number:** | 7120554 |
| **Patent Number:** | 7064721 |
| **Patent Number:** | 7162153 |
| **Patent Number:** | 6917890 |
| **Patent Number:** | 7021811 |
| **Patent Number:** | 7457699 |
| **Patent Number:** | 7217300 |
| **Patent Number:** | 7575826 |
| **Patent Number:** | 7166001 |
| **Patent Number:** | 7002699 |
| **Patent Number:** | 7350954 |
| **Patent Number:** | 7280662 |
| **Patent Number:** | 7523237 |
| **Patent Number:** | 7308347 |
| **Patent Number:** | 6987229 |
| **Patent Number:** | 7015709 |
| **Patent Number:** | 6950629 |
| **Patent Number:** | 7261604 |
| **Patent Number:** | 7231177 |
| **Patent Number:** | 7190325 |
| **Patent Number:** | 7206679 |
| **Patent Number:** | 6925370 |
| **Patent Number:** | 7499283 |
| **Patent Number:** | 7736903 |
| **Patent Number:** | 7252400 |
| **Patent Number:** | 6966233 |
| **Patent Number:** | 6927678 |
| **Patent Number:** | 7441257 |
| **Patent Number:** | 7351102 |
| **Patent Number:** | 6935687 |
| **Patent Number:** | 7163075 |

| Property Type | Number |
|---|---|
| **Patent Number:** | 7449648 |
| **Patent Number:** | 7191269 |
| **Patent Number:** | 7149089 |
| **Patent Number:** | 7366643 |
| **Patent Number:** | 7875997 |
| **Patent Number:** | 7230998 |
| **Patent Number:** | 7386056 |
| **Patent Number:** | 7656966 |
| **Patent Number:** | 7645532 |
| **Patent Number:** | 7215713 |
| **Patent Number:** | 7280613 |
| **Patent Number:** | 7751497 |
| **Patent Number:** | 7657225 |
| **Patent Number:** | 7230992 |
| **Patent Number:** | 6896524 |
| **Patent Number:** | 7095569 |
| **Patent Number:** | 7331671 |
| **Patent Number:** | 7362885 |
| **Patent Number:** | 7512159 |
| **Patent Number:** | 7785725 |
| **Patent Number:** | 7473228 |
| **Patent Number:** | 7499696 |
| **Patent Number:** | 7326482 |
| **Patent Number:** | 7179558 |
| **Patent Number:** | 7009551 |
| **Patent Number:** | 7049859 |
| **Patent Number:** | 7021952 |
| **Patent Number:** | 7156697 |
| **Patent Number:** | 7039514 |
| **Patent Number:** | 7306755 |
| **Patent Number:** | 7997542 |
| **Patent Number:** | 7423665 |
| **Patent Number:** | 7700044 |
| **Patent Number:** | 7504839 |
| **Patent Number:** | 7697766 |
| **Patent Number:** | 7674538 |
| **Patent Number:** | 7306871 |
| **Patent Number:** | 7689008 |

| Property Type | Number |
|---|---|
| **Patent Number:** | 7294827 |
| **Patent Number:** | 7623966 |
| **Patent Number:** | 7095567 |
| **Patent Number:** | 7254820 |
| **Patent Number:** | 7323686 |
| **Patent Number:** | 7008270 |
| **Patent Number:** | 7818989 |
| **Patent Number:** | 7424354 |
| **Patent Number:** | 7364301 |
| **Patent Number:** | 7499779 |
| **Patent Number:** | 7660655 |
| **Patent Number:** | 7575665 |
| **Patent Number:** | 7623950 |
| **Patent Number:** | 7230523 |
| **Patent Number:** | 7791670 |
| **Patent Number:** | 7697886 |
| **Patent Number:** | 7777778 |
| **Patent Number:** | 7026549 |
| **Patent Number:** | 7148482 |
| **Patent Number:** | 7146276 |
| **Patent Number:** | 7385520 |
| **Patent Number:** | 7403845 |
| **Patent Number:** | 7693481 |
| **Patent Number:** | 7050908 |
| **Patent Number:** | 7781123 |
| **Patent Number:** | 7564907 |
| **Patent Number:** | 7720184 |
| **Patent Number:** | 7590399 |
| **Patent Number:** | 7830983 |
| **Patent Number:** | 7350934 |
| **Patent Number:** | 8642345 |
| **Patent Number:** | 8455262 |
| **Patent Number:** | 7279132 |
| **Patent Number:** | 7478875 |
| **Patent Number:** | 7937672 |
| **Patent Number:** | 7773697 |
| **Patent Number:** | 7822149 |
| **Patent Number:** | 7439866 |

| Property Type | Number |
|---|---|
| **Patent Number:** | 7269483 |
| **Patent Number:** | 7474262 |
| **Patent Number:** | 7119705 |
| **Patent Number:** | 7176390 |
| **Patent Number:** | 7539661 |
| **Patent Number:** | 7570170 |
| **Patent Number:** | 7324191 |
| **Patent Number:** | 7486835 |
| **Patent Number:** | 7403848 |
| **Patent Number:** | 7422819 |
| **Patent Number:** | 7094081 |
| **Patent Number:** | 7552792 |
| **Patent Number:** | 7798276 |
| **Patent Number:** | 7295771 |
| **Patent Number:** | 7288009 |
| **Patent Number:** | 7325870 |
| **Patent Number:** | 7410212 |
| **Patent Number:** | 7224270 |
| **Patent Number:** | 7048584 |
| **Patent Number:** | 7412314 |
| **Patent Number:** | 7998632 |
| **Patent Number:** | 7546194 |
| **Patent Number:** | 8218411 |
| **Patent Number:** | 7611327 |
| **Patent Number:** | 7501938 |
| **Patent Number:** | 7425889 |
| **Patent Number:** | 7327225 |
| **Patent Number:** | 7180257 |
| **Patent Number:** | 7589487 |
| **Patent Number:** | 7474068 |
| **Patent Number:** | 7538500 |
| **Patent Number:** | 7094099 |
| **Patent Number:** | 7253722 |
| **Patent Number:** | 7415337 |
| **Patent Number:** | 7422283 |
| **Patent Number:** | 7623594 |
| **Patent Number:** | 7352145 |
| **Patent Number:** | 8658013 |

| Property Type | Number |
|---|---|
| **Patent Number:** | 7176776 |
| **Patent Number:** | 7372055 |
| **Patent Number:** | 7492962 |
| **Patent Number:** | 7348880 |
| **Patent Number:** | 7463161 |
| **Patent Number:** | 7474264 |
| **Patent Number:** | 7324043 |
| **Patent Number:** | 7245261 |
| **Patent Number:** | 7436270 |
| **Patent Number:** | 7861517 |
| **Patent Number:** | 7349783 |
| **Patent Number:** | 7322392 |
| **Patent Number:** | 7944967 |
| **Patent Number:** | 7828478 |
| **Patent Number:** | 7710249 |
| **Patent Number:** | 7858214 |
| **Patent Number:** | 7351973 |
| **Patent Number:** | 7480351 |
| **Patent Number:** | 7706978 |
| **Patent Number:** | 7931707 |
| **Patent Number:** | 7472007 |
| **Patent Number:** | 7528731 |
| **Patent Number:** | 7252553 |
| **Patent Number:** | 7438152 |
| **Patent Number:** | 7548270 |
| **Patent Number:** | 7580325 |
| **Patent Number:** | 7918381 |
| **Patent Number:** | 8168347 |
| **Patent Number:** | 7423540 |
| **Patent Number:** | 7310190 |
| **Patent Number:** | 7505841 |
| **Patent Number:** | 7204716 |
| **Patent Number:** | 7241156 |
| **Patent Number:** | 8042631 |
| **Patent Number:** | 7657994 |
| **Patent Number:** | 7659639 |
| **Patent Number:** | 7351098 |
| **Patent Number:** | 7650034 |

| Property Type | Number |
|---|---|
| **Patent Number:** | 7742621 |
| **Patent Number:** | 7201595 |
| **Patent Number:** | 7749012 |
| **Patent Number:** | 7267583 |
| **Patent Number:** | 7558555 |
| **Patent Number:** | 7468660 |
| **Patent Number:** | 7439458 |
| **Patent Number:** | 7462795 |
| **Patent Number:** | 7697913 |
| **Patent Number:** | 7468673 |
| **Patent Number:** | 7217891 |
| **Patent Number:** | 7876926 |
| **Patent Number:** | 7676892 |
| **Patent Number:** | 7448924 |
| **Patent Number:** | 7610250 |
| **Patent Number:** | 7689325 |
| **Patent Number:** | 7710333 |
| **Patent Number:** | 7675820 |
| **Patent Number:** | 7565126 |
| **Patent Number:** | 7578593 |
| **Patent Number:** | 7477181 |
| **Patent Number:** | 7635443 |
| **Patent Number:** | 7594629 |
| **Patent Number:** | 7371115 |
| **Patent Number:** | 7676087 |
| **Patent Number:** | 7351073 |
| **Patent Number:** | 7347738 |
| **Patent Number:** | 7332674 |
| **Patent Number:** | 7347743 |
| **Patent Number:** | 7646422 |
| **Patent Number:** | 7331831 |
| **Patent Number:** | 7745771 |
| **Patent Number:** | 7179136 |
| **Patent Number:** | 7396255 |
| **Patent Number:** | 7835834 |
| **Patent Number:** | 7868828 |
| **Patent Number:** | 7940955 |
| **Patent Number:** | 7370970 |

| Property Type | Number |
|---|---|
| **Patent Number:** | 7439507 |
| **Patent Number:** | 7351089 |
| **Patent Number:** | 7512516 |
| **Patent Number:** | 7278890 |
| **Patent Number:** | 8356682 |
| **Patent Number:** | 7758989 |
| **Patent Number:** | 7700215 |
| **Patent Number:** | 7201587 |
| **Patent Number:** | 7266469 |
| **Patent Number:** | 7423224 |
| **Patent Number:** | 7917111 |
| **Patent Number:** | 7687720 |
| **Patent Number:** | 7408116 |
| **Patent Number:** | 7438585 |
| **Patent Number:** | 7534962 |
| **Patent Number:** | 7771884 |
| **Patent Number:** | 8034499 |
| **Patent Number:** | 7759901 |
| **Patent Number:** | 7413479 |
| **Patent Number:** | 7735920 |
| **Patent Number:** | 7675296 |
| **Patent Number:** | 7804796 |
| **Patent Number:** | 7615713 |
| **Patent Number:** | 7805231 |
| **Patent Number:** | 7410114 |
| **Patent Number:** | 7645943 |
| **Patent Number:** | 7438497 |
| **Patent Number:** | 7726985 |
| **Patent Number:** | 7972422 |
| **Patent Number:** | 7384309 |
| **Patent Number:** | 7503793 |
| **Patent Number:** | 7434481 |
| **Patent Number:** | 8545153 |
| **Patent Number:** | 7800344 |
| **Patent Number:** | 7408123 |
| **Patent Number:** | 7940962 |
| **Patent Number:** | 7668525 |
| **Patent Number:** | 7618057 |

| Property Type | Number |
|---|---|
| **Patent Number:** | 8988884 |
| **Patent Number:** | 7733659 |
| **Patent Number:** | 8087165 |
| **Patent Number:** | 8284559 |
| **Patent Number:** | 8035976 |
| **Patent Number:** | 8493739 |
| **Patent Number:** | 8498126 |
| **Patent Number:** | 8570757 |
| **Patent Number:** | 8625292 |
| **Patent Number:** | 8731862 |
| **Patent Number:** | 8477509 |
| **Patent Number:** | 8593821 |
| **Patent Number:** | 8599568 |
| **Patent Number:** | 8625293 |
| **Patent Number:** | 8982561 |
| **Patent Number:** | 8947860 |
| **Patent Number:** | 8724335 |
| **Patent Number:** | 8830687 |
| **Patent Number:** | 8749988 |
| **Patent Number:** | 9119288 |
| **Patent Number:** | 9013881 |
| **Patent Number:** | 9237683 |
| **Patent Number:** | 9173332 |
| **Patent Number:** | 7422480 |
| **Patent Number:** | 7598455 |
| **Patent Number:** | 7710236 |
| **Patent Number:** | 7864544 |
| **Patent Number:** | 7635212 |
| **Patent Number:** | 7588466 |
| **Patent Number:** | 7331801 |
| **Patent Number:** | 7701321 |
| **Patent Number:** | 7617066 |
| **Patent Number:** | 8391780 |
| **Patent Number:** | 8011936 |
| **Patent Number:** | 7753713 |
| **Patent Number:** | 7498896 |
| **Patent Number:** | 7876204 |
| **Patent Number:** | 7601019 |

| Property Type | Number |
|---|---|
| **Patent Number:** | 7485012 |
| **Patent Number:** | 7957333 |
| **Patent Number:** | 7805120 |
| **Patent Number:** | 8055445 |
| **Patent Number:** | 7970175 |
| **Patent Number:** | 8104173 |
| **Patent Number:** | 7365102 |
| **Patent Number:** | 8199198 |
| **Patent Number:** | 7889234 |
| **Patent Number:** | 7523679 |
| **Patent Number:** | 7679378 |
| **Patent Number:** | 8045500 |
| **Patent Number:** | 8013539 |
| **Patent Number:** | 8116711 |
| **Patent Number:** | 7658642 |
| **Patent Number:** | 7790983 |
| **Patent Number:** | 7632118 |
| **Patent Number:** | 7869533 |
| **Patent Number:** | 7534138 |
| **Patent Number:** | 7636064 |
| **Patent Number:** | 7864118 |
| **Patent Number:** | 7641511 |
| **Patent Number:** | 7692096 |
| **Patent Number:** | 7674972 |
| **Patent Number:** | 8008589 |
| **Patent Number:** | 7963787 |
| **Patent Number:** | 8046135 |
| **Patent Number:** | 7510407 |
| **Patent Number:** | 7901820 |
| **Patent Number:** | 8050460 |
| **Patent Number:** | 7639171 |
| **Patent Number:** | 7932835 |
| **Patent Number:** | 7903629 |
| **Patent Number:** | 7609530 |
| **Patent Number:** | 7708919 |
| **Patent Number:** | 8055020 |
| **Patent Number:** | 8446381 |
| **Patent Number:** | 7876106 |

| Property Type | Number |
|---|---|
| **Patent Number:** | 8190139 |
| **Patent Number:** | 8116524 |
| **Patent Number:** | 8155380 |
| **Patent Number:** | 8051877 |
| **Patent Number:** | 8047860 |
| **Patent Number:** | 8400261 |
| **Patent Number:** | 7749031 |
| **Patent Number:** | 7868251 |
| **Patent Number:** | 8027168 |
| **Patent Number:** | 8180527 |
| **Patent Number:** | 8022834 |
| **Patent Number:** | 8045337 |
| **Patent Number:** | 8053128 |
| **Patent Number:** | 8115676 |
| **Patent Number:** | 7914278 |
| **Patent Number:** | 7651346 |
| **Patent Number:** | 7752925 |
| **Patent Number:** | 9276267 |
| **Patent Number:** | 8421641 |
| **Patent Number:** | 8237455 |
| **Patent Number:** | 7896435 |
| **Patent Number:** | 7757997 |
| **Patent Number:** | 7658645 |
| **Patent Number:** | 7668690 |
| **Patent Number:** | 8198992 |
| **Patent Number:** | 8092061 |
| **Patent Number:** | 8107915 |
| **Patent Number:** | 7780485 |
| **Patent Number:** | 7635286 |
| **Patent Number:** | 8052492 |
| **Patent Number:** | 7806007 |
| **Patent Number:** | 8094001 |
| **Patent Number:** | 7727022 |
| **Patent Number:** | 8164911 |
| **Patent Number:** | 8681507 |
| **Patent Number:** | 9042119 |
| **Patent Number:** | 9854683 |
| **Patent Number:** | 7722416 |

| Property Type | Number |
|---|---|
| **Patent Number:** | 8158909 |
| **Patent Number:** | 8249798 |
| **Patent Number:** | 7641499 |
| **Patent Number:** | 7896952 |
| **Patent Number:** | 7727020 |
| **Patent Number:** | 8091960 |
| **Patent Number:** | 7960652 |
| **Patent Number:** | 7794274 |
| **Patent Number:** | 7880480 |
| **Patent Number:** | 8154394 |
| **Patent Number:** | 8011253 |
| **Patent Number:** | 8499644 |
| **Patent Number:** | 8184856 |
| **Patent Number:** | 8092245 |
| **Patent Number:** | 8049174 |
| **Patent Number:** | 8213928 |
| **Patent Number:** | 7810444 |
| **Patent Number:** | 8760886 |
| **Patent Number:** | 8264856 |
| **Patent Number:** | 9237685 |
| **Patent Number:** | 8004212 |
| **Patent Number:** | 8004400 |
| **Patent Number:** | 8456177 |
| **Patent Number:** | 7855030 |
| **Patent Number:** | 7891260 |
| **Patent Number:** | 8477513 |
| **Patent Number:** | 9042467 |
| **Patent Number:** | 8232017 |
| **Patent Number:** | 9692079 |
| **Patent Number:** | 9356307 |
| **Patent Number:** | 8604968 |
| **Patent Number:** | 9063230 |
| **Patent Number:** | 9271430 |
| **Patent Number:** | 8164045 |
| **Patent Number:** | 7726972 |
| **Patent Number:** | 8336351 |
| **Patent Number:** | 8660737 |
| **Patent Number:** | 8011598 |

| Property Type | Number |
|---|---|
| **Patent Number:** | 8224623 |
| **Patent Number:** | 8500287 |
| **Patent Number:** | 8124037 |
| **Patent Number:** | 7833674 |
| **Patent Number:** | 8457844 |
| **Patent Number:** | 8489283 |
| **Patent Number:** | 8377705 |
| **Patent Number:** | 8360803 |
| **Patent Number:** | 8022346 |
| **Patent Number:** | 8500194 |
| **Patent Number:** | 8266798 |
| **Patent Number:** | 8350684 |
| **Patent Number:** | 8363957 |
| **Patent Number:** | 7932772 |
| **Patent Number:** | 8207796 |
| **Patent Number:** | 8564423 |
| **Patent Number:** | 7980872 |
| **Patent Number:** | 8375575 |
| **Patent Number:** | 9456531 |
| **Patent Number:** | 7931479 |
| **Patent Number:** | 8836538 |
| **Patent Number:** | 7905755 |
| **Patent Number:** | 8598475 |
| **Patent Number:** | 8400323 |
| **Patent Number:** | 8438862 |
| **Patent Number:** | 8816995 |
| **Patent Number:** | 8259952 |
| **Patent Number:** | 8837140 |
| **Patent Number:** | 8105113 |
| **Patent Number:** | 8219286 |
| **Patent Number:** | 8259962 |
| **Patent Number:** | 8466438 |
| **Patent Number:** | 9112219 |
| **Patent Number:** | 8420278 |
| **Patent Number:** | 8833945 |
| **Patent Number:** | 8129951 |
| **Patent Number:** | 8277055 |
| **Patent Number:** | 8920993 |

| Property Type | Number |
|---|---|
| **Patent Number:** | 7955104 |
| **Patent Number:** | 8305773 |
| **Patent Number:** | 9125293 |
| **Patent Number:** | 8379769 |
| **Patent Number:** | 8599971 |
| **Patent Number:** | 8646176 |
| **Patent Number:** | 8713771 |
| **Patent Number:** | 8043106 |
| **Patent Number:** | 8181343 |
| **Patent Number:** | 9229531 |
| **Patent Number:** | 8757825 |
| **Patent Number:** | 9063560 |
| **Patent Number:** | 8641142 |
| **Patent Number:** | 8650351 |
| **Patent Number:** | 8573994 |
| **Patent Number:** | 8488303 |
| **Patent Number:** | 8267702 |
| **Patent Number:** | 8558713 |
| **Patent Number:** | 9111669 |
| **Patent Number:** | 9063327 |
| **Patent Number:** | 8813579 |
| **Patent Number:** | 9322724 |
| **Patent Number:** | 8287306 |
| **Patent Number:** | 8539283 |
| **Patent Number:** | 8362992 |
| **Patent Number:** | 8305678 |
| **Patent Number:** | 8333622 |
| **Patent Number:** | 8363325 |
| **Patent Number:** | 8279510 |
| **Patent Number:** | 8480798 |
| **Patent Number:** | 9052736 |
| **Patent Number:** | 8440358 |
| **Patent Number:** | 8235744 |
| **Patent Number:** | 8926107 |
| **Patent Number:** | 8832934 |
| **Patent Number:** | 8210864 |
| **Patent Number:** | 8548407 |
| **Patent Number:** | 8277243 |

| Property Type | Number |
|---|---|
| **Patent Number:** | D669033 |
| **Patent Number:** | 8323046 |
| **Patent Number:** | 8333603 |
| **Patent Number:** | 8038455 |
| **Patent Number:** | 8833185 |
| **Patent Number:** | 9190224 |
| **Patent Number:** | 8442425 |
| **Patent Number:** | 8441394 |
| **Patent Number:** | 8387457 |
| **Patent Number:** | 9839152 |
| **Patent Number:** | 8408765 |
| **Patent Number:** | 9227513 |
| **Patent Number:** | 8559981 |
| **Patent Number:** | 8579240 |
| **Patent Number:** | 8398282 |
| **Patent Number:** | 9172177 |
| **Patent Number:** | 8197982 |
| **Patent Number:** | 8827744 |
| **Patent Number:** | 9725003 |
| **Patent Number:** | 8485853 |
| **Patent Number:** | 8585447 |
| **Patent Number:** | 9153834 |
| **Patent Number:** | 9379571 |
| **Patent Number:** | 9707853 |
| **Patent Number:** | 8379302 |
| **Patent Number:** | 8556666 |
| **Patent Number:** | 8746889 |
| **Patent Number:** | 8477401 |
| **Patent Number:** | 8610841 |
| **Patent Number:** | 8842043 |
| **Patent Number:** | 8680936 |
| **Patent Number:** | 8553334 |
| **Patent Number:** | 8613470 |
| **Patent Number:** | 8823641 |
| **Patent Number:** | 9280208 |
| **Patent Number:** | 9297897 |
| **Patent Number:** | 8947217 |
| **Patent Number:** | 8622774 |

| Property Type | Number |
|---|---|
| **Patent Number:** | 8758035 |
| **Patent Number:** | 8973989 |
| **Patent Number:** | 8412413 |
| **Patent Number:** | 8503088 |
| **Patent Number:** | 8784127 |
| **Patent Number:** | 9047518 |
| **Patent Number:** | 9690320 |
| **Patent Number:** | 8489316 |
| **Patent Number:** | 8584315 |
| **Patent Number:** | 9662983 |
| **Patent Number:** | 8659408 |
| **Patent Number:** | 9004954 |
| **Patent Number:** | 9126502 |
| **Patent Number:** | 9118911 |
| **Patent Number:** | 8884169 |
| **Patent Number:** | 9282655 |
| **Patent Number:** | 8925189 |
| **Patent Number:** | 9011186 |
| **Patent Number:** | 8882521 |
| **Patent Number:** | 9005490 |
| **Patent Number:** | 9039450 |
| **Patent Number:** | 9291184 |
| **Patent Number:** | D680952 |
| **Patent Number:** | D686984 |
| **Patent Number:** | D686985 |
| **Patent Number:** | 9024804 |
| **Patent Number:** | 8712364 |
| **Patent Number:** | 9293745 |
| **Patent Number:** | 9017897 |
| **Patent Number:** | 9061603 |
| **Patent Number:** | 9236758 |
| **Patent Number:** | 8823551 |
| **Patent Number:** | 9304042 |
| **Patent Number:** | 9369001 |
| **Patent Number:** | 9715986 |
| **Patent Number:** | 9407038 |
| **Patent Number:** | 8977090 |
| **Patent Number:** | 8991045 |

| Property Type | Number |
|---|---|
| **Patent Number:** | 9042809 |
| **Patent Number:** | 9071016 |
| **Patent Number:** | 9391393 |
| **Patent Number:** | 9061591 |
| **Patent Number:** | 8992251 |
| **Patent Number:** | 9297892 |
| **Patent Number:** | 8926344 |
| **Patent Number:** | 8965599 |
| **Patent Number:** | 9622355 |
| **Patent Number:** | 8930045 |
| **Patent Number:** | 9616829 |
| **Patent Number:** | 9099809 |
| **Patent Number:** | 9114720 |
| **Patent Number:** | 9368910 |
| **Patent Number:** | 9112278 |
| **Patent Number:** | 9356300 |
| **Patent Number:** | 9455516 |
| **Patent Number:** | 9153879 |
| **Patent Number:** | 9118130 |
| **Patent Number:** | 9520601 |
| **Patent Number:** | 9698434 |
| **Patent Number:** | 9494024 |
| **Patent Number:** | 9647291 |
| **Patent Number:** | 9537243 |
| **Patent Number:** | 8992258 |
| **Patent Number:** | 9812717 |
| **Patent Number:** | 9054454 |
| **Patent Number:** | 9117573 |
| **Patent Number:** | 9099814 |
| **Patent Number:** | 9270055 |
| **Patent Number:** | 9190739 |
| **Patent Number:** | 9153878 |
| **Patent Number:** | 9960502 |
| **Patent Number:** | 9153889 |
| **Patent Number:** | 9289848 |
| **Patent Number:** | 9666880 |
| **Patent Number:** | 9172183 |
| **Patent Number:** | 9653845 |

| Property Type | Number |
|---|---|
| **Patent Number:** | 8978201 |
| **Patent Number:** | 9917434 |
| **Patent Number:** | 9928941 |
| **Patent Number:** | 9042717 |
| **Patent Number:** | 9270318 |
| **Patent Number:** | 9153899 |
| **Patent Number:** | 9379394 |
| **Patent Number:** | 9531020 |
| **Patent Number:** | 9366281 |
| **Patent Number:** | 9142907 |
| **Patent Number:** | 9362659 |
| **Patent Number:** | 9231124 |
| **Patent Number:** | 9231310 |
| **Patent Number:** | 9379530 |
| **Patent Number:** | 9397485 |
| **Patent Number:** | 9331413 |
| **Patent Number:** | 9476283 |
| **Patent Number:** | 9640829 |
| **Patent Number:** | 9321365 |
| **Patent Number:** | 9502911 |
| **Patent Number:** | 9300069 |
| **Patent Number:** | 9328596 |
| **Patent Number:** | 9568600 |
| **Patent Number:** | 9228882 |
| **Patent Number:** | 9356438 |
| **Patent Number:** | 9376028 |
| **Patent Number:** | 9227526 |
| **Patent Number:** | 9281619 |
| **Patent Number:** | 9543747 |
| **Patent Number:** | 9887529 |
| **Patent Number:** | 9310468 |
| **Patent Number:** | 9293812 |
| **Patent Number:** | 9843132 |
| **Patent Number:** | 9577367 |
| **Patent Number:** | 9541637 |
| **Patent Number:** | 9621874 |
| **Patent Number:** | 9300085 |
| **Patent Number:** | 9728896 |

| Property Type | Number |
|---|---|
| **Patent Number:** | 9362676 |
| **Patent Number:** | 9594155 |
| **Patent Number:** | 9450226 |
| **Patent Number:** | 9784820 |
| **Patent Number:** | 9407026 |
| **Patent Number:** | 9590348 |
| **Patent Number:** | 9506803 |
| **Patent Number:** | 9664775 |
| **Patent Number:** | 9395538 |
| **Patent Number:** | 9404774 |
| **Patent Number:** | 9379486 |
| **Patent Number:** | 9504172 |
| **Patent Number:** | 9472885 |
| **Patent Number:** | 9508344 |
| **Patent Number:** | 9559379 |
| **Patent Number:** | 9911056 |
| **Patent Number:** | 9862318 |
| **Patent Number:** | 9711898 |
| **Patent Number:** | 9680332 |
| **Patent Number:** | 9469176 |
| **Patent Number:** | 9691514 |
| **Patent Number:** | 7233769 |
| **Patent Number:** | 8290173 |
| **Patent Number:** | 8208654 |
| **Patent Number:** | 7937118 |
| **Patent Number:** | 7076204 |
| **Patent Number:** | 6987947 |
| **Patent Number:** | 7359671 |
| **Patent Number:** | 7603080 |
| **Patent Number:** | 9167057 |
| **Patent Number:** | 9592528 |
| **Patent Number:** | 9537249 |
| **Patent Number:** | 9711902 |
| **Patent Number:** | 9568344 |
| **Patent Number:** | 9726514 |
| **Patent Number:** | 9619420 |
| **Patent Number:** | 9460037 |
| **Patent Number:** | 9645962 |

| Property Type | Number |
|---|---|
| **Patent Number:** | 9475461 |
| **Patent Number:** | 9810782 |
| **Patent Number:** | 9698501 |
| **Patent Number:** | 9910151 |
| **Patent Number:** | 9693459 |
| **Patent Number:** | 9350116 |
| **Patent Number:** | 9455523 |
| **Patent Number:** | 9499202 |
| **Patent Number:** | 9618936 |
| **Patent Number:** | 9555807 |
| **Patent Number:** | 9470777 |
| **Patent Number:** | 9472899 |
| **Patent Number:** | 9431771 |
| **Patent Number:** | 9768554 |
| **Patent Number:** | 9705228 |
| **Patent Number:** | 9781361 |
| **Patent Number:** | 10023120 |
| **Patent Number:** | 9608357 |
| **Patent Number:** | 9493083 |
| **Patent Number:** | 9590367 |
| **Patent Number:** | 9983301 |
| **Patent Number:** | 9923327 |
| **Patent Number:** | 9493118 |
| **Patent Number:** | 9727056 |
| **Patent Number:** | 9588517 |
| **Patent Number:** | 9604639 |
| **Patent Number:** | 9594378 |
| **Patent Number:** | 9637120 |
| **Patent Number:** | 9750151 |
| **Patent Number:** | 9537227 |
| **Patent Number:** | 9787031 |
| **Patent Number:** | 10082168 |
| **Patent Number:** | D773964 |
| **Patent Number:** | D802518 |
| **Patent Number:** | 9914475 |
| **Patent Number:** | 9762003 |
| **Patent Number:** | 9975437 |
| **Patent Number:** | 10032545 |

| Property Type | Number |
|---|---|
| **Patent Number:** | 9541639 |
| **Patent Number:** | 9627785 |
| **Patent Number:** | 9783130 |
| **Patent Number:** | 9798054 |
| **Patent Number:** | 9863866 |
| **Patent Number:** | 10031624 |
| **Patent Number:** | 7438610 |
| **Patent Number:** | 9836977 |
| **Patent Number:** | 9762001 |
| **Patent Number:** | 10021469 |
| **Patent Number:** | 9952319 |
| **Patent Number:** | 9764741 |
| **Patent Number:** | 10037696 |
| **Patent Number:** | 9864374 |
| **Patent Number:** | 10017134 |
| **Patent Number:** | 9953476 |
| **Patent Number:** | 9898008 |
| **Patent Number:** | 9671785 |
| **Patent Number:** | 9910440 |
| **Patent Number:** | 9989966 |
| **Patent Number:** | 10025311 |
| **Patent Number:** | 9787002 |
| **Patent Number:** | 9840232 |
| **Patent Number:** | 9841813 |
| **Patent Number:** | 9653846 |
| **Patent Number:** | 9840253 |
| **Patent Number:** | 9842500 |
| **Patent Number:** | 9634435 |
| **Patent Number:** | 9634445 |
| **Patent Number:** | 10019014 |
| **Patent Number:** | 9915003 |
| **Patent Number:** | 9667000 |
| **Patent Number:** | 9758114 |
| **Patent Number:** | 9653859 |
| **Patent Number:** | 9755362 |
| **Patent Number:** | 9960550 |
| **Patent Number:** | 10090622 |
| **Patent Number:** | 9692153 |

| Property Type | Number |
|---|---|
| **Patent Number:** | 9899128 |
| **Patent Number:** | 10090614 |
| **Patent Number:** | 9929508 |
| **Patent Number:** | 9705225 |
| **Patent Number:** | 9870001 |
| **Patent Number:** | 9944318 |
| **Patent Number:** | 9927810 |
| **Patent Number:** | 9853396 |
| **Patent Number:** | 10090608 |
| **Patent Number:** | 10008786 |
| **Patent Number:** | 9780487 |
| **Patent Number:** | 9912101 |
| **Patent Number:** | 9893479 |
| **Patent Number:** | 10014583 |
| **Patent Number:** | 10026321 |
| **Patent Number:** | 9928939 |
| **Patent Number:** | 10089875 |
| **Patent Number:** | 10078334 |
| **Patent Number:** | 10031231 |
| **Patent Number:** | 9865968 |
| **Patent Number:** | 9793639 |
| **Patent Number:** | 9899758 |
| **Patent Number:** | 10021797 |
| **Patent Number:** | 9901018 |
| **Patent Number:** | 9978707 |
| **Patent Number:** | 9917381 |
| **Patent Number:** | 10037472 |
| **Patent Number:** | 10086809 |
| **Patent Number:** | 9906003 |
| **Patent Number:** | 9991620 |
| **Patent Number:** | 9917402 |
| **Patent Number:** | 10020599 |
| **Patent Number:** | 10025316 |
| **Patent Number:** | 9954347 |
| **Patent Number:** | 10028391 |
| **Patent Number:** | 9929509 |
| **Patent Number:** | 9979167 |
| **Patent Number:** | 10079446 |

| Property Type | Number |
|---|---|
| **Patent Number:** | 10017659 |
| **Patent Number:** | 6168445 |
| **Patent Number:** | 6430120 |
| **Patent Number:** | 6099154 |
| **Patent Number:** | 6087976 |
| **Patent Number:** | 6018131 |
| **Patent Number:** | 6323487 |
| **Patent Number:** | 6236004 |
| **Patent Number:** | 6161822 |
| **Patent Number:** | 6094160 |
| **Patent Number:** | 6006881 |
| **Patent Number:** | 6481701 |
| **Patent Number:** | 6157881 |
| **Patent Number:** | 5969599 |
| **Patent Number:** | 5964817 |
| **Patent Number:** | 6222442 |
| **Patent Number:** | 6219606 |
| **Patent Number:** | 6186486 |
| **Patent Number:** | 6430489 |
| **Patent Number:** | 6166454 |
| **Patent Number:** | 6898498 |
| **Patent Number:** | 6139351 |
| **Patent Number:** | 6270115 |
| **Patent Number:** | 6356854 |
| **Patent Number:** | 6414265 |
| **Patent Number:** | 6230494 |
| **Patent Number:** | 6392166 |
| **Patent Number:** | 6151540 |
| **Patent Number:** | 6420797 |
| **Patent Number:** | 6220876 |
| **Patent Number:** | 6402321 |
| **Patent Number:** | 6043937 |
| **Patent Number:** | 6236308 |

**CORRESPONDENCE DATA**

**Fax Number:**

***Correspondence will be sent to the e-mail address first; if that is unsuccessful, it will be sent using a fax number, if provided; if that is unsuccessful, it will be sent via US Mail.***

**Phone:** 2488131214

| | |
|---|---|
| **Email:** | craig.a.baldwin@aptiv.com |
| **Correspondent Name:** | CRAIG A. BALDWIN |
| **Address Line 1:** | 5725 INNOVATION DRIVE |
| **Address Line 4:** | TROY, MICHIGAN 48098 |

| | |
|---|---|
| **NAME OF SUBMITTER:** | CRAIG A. BALDWIN |
| **SIGNATURE:** | /Craig A. Baldwin/ |
| **DATE SIGNED:** | 09/25/2018 |
| | This document serves as an Oath/Declaration (37 CFR 1.63). |

**Total Attachments: 19**

source=Confirmatory Assignment DTI to ATL Jan 1 2018 Granted Patents#page1.tif
source=Confirmatory Assignment DTI to ATL Jan 1 2018 Granted Patents#page2.tif
source=Confirmatory Assignment DTI to ATL Jan 1 2018 Granted Patents#page3.tif
source=Confirmatory Assignment DTI to ATL Jan 1 2018 Granted Patents#page4.tif
source=Confirmatory Assignment DTI to ATL Jan 1 2018 Granted Patents#page5.tif
source=Confirmatory Assignment DTI to ATL Jan 1 2018 Granted Patents#page6.tif
source=Confirmatory Assignment DTI to ATL Jan 1 2018 Granted Patents#page7.tif
source=Confirmatory Assignment DTI to ATL Jan 1 2018 Granted Patents#page8.tif
source=Confirmatory Assignment DTI to ATL Jan 1 2018 Granted Patents#page9.tif
source=Confirmatory Assignment DTI to ATL Jan 1 2018 Granted Patents#page10.tif
source=Confirmatory Assignment DTI to ATL Jan 1 2018 Granted Patents#page11.tif
source=Confirmatory Assignment DTI to ATL Jan 1 2018 Granted Patents#page12.tif
source=Confirmatory Assignment DTI to ATL Jan 1 2018 Granted Patents#page13.tif
source=Confirmatory Assignment DTI to ATL Jan 1 2018 Granted Patents#page14.tif
source=Confirmatory Assignment DTI to ATL Jan 1 2018 Granted Patents#page15.tif
source=Confirmatory Assignment DTI to ATL Jan 1 2018 Granted Patents#page16.tif
source=Confirmatory Assignment DTI to ATL Jan 1 2018 Granted Patents#page17.tif
source=Confirmatory Assignment DTI to ATL Jan 1 2018 Granted Patents#page18.tif
source=Confirmatory Assignment DTI to ATL Jan 1 2018 Granted Patents#page19.tif

# Confirmatory Assignment

Whereas, **DELPHI TECHNOLOGIES, INC.**, of 5725 Delphi Drive, Troy, Michigan 48098,U.S.A, hereinafter called Assignor, is the assignee of record of the entire right, title and interest in the U.S. Patents listed in the attached **Appendix** (hereinafter the "Assigned Patent Rights") by assignment recorded with the U.S. Patent and Trademark Office; and

Whereas, **APTIV TECHNOLOGIES LIMITED**, a company incorporated in accordance with the Companies Act CAP 308 of the laws of Barbados (company no. 41949) and licensed to operate as an International Business Company, whose registered office is at Erin Court, Bishop's Court Hill, St. Michael, Barbados, hereinafter called Assignee, desires to acquire the Assignor's entire right, title, and interest including rights to recover for past infringement in the Assigned Patents.

Therefore, for valuable consideration, receipt of which is hereby acknowledged, the above named Assignor, hereby sells, assigns and transfers to the above named Assignee, its successors and assigns, the Assignor's entire right, title and interest including rights to recover for past infringement in the Assigned Patents; and Assignor will execute without further consideration all papers deemed necessary by the Assignee in connection with said Assigned Patents when called upon to do so by the Assignee.

This Assignment is made effective as of January 1, 2018.

ASSIGNOR:
Delphi Technologies, Inc.

By: _____

Name: CRAIG A. BALDWIN

Title: ASSISTANT SECRETARY

1/18

## APPENDIX
## List of Assigned Patent Rights

| Case Number | Country | Application No. | Filing Date | Patent No. | Patent Date |
|---|---|---|---|---|---|
| DP-300140 | US | 09/667095 | 21-Sep-2000 | 6646845 | 11-Nov-2003 |
| DP-300307 | US | 09/482044 | 13-Jan-2000 | 6286222 | 11-Sep-2001 |
| DP-300308 | US | 09/482042 | 13-Jan-2000 | 6401047 | 04-Jun-2002 |
| DP-300309 | US | 09/482043 | 13-Jan-2000 | 6286221 | 11-Sep-2001 |
| DP-300384 | US | 09/480069 | 10-Jan-2000 | 6358104 | 19-Mar-2002 |
| DP-300436 | US | 09/412936 | 05-Oct-1999 | 6246936 | 12-Jun-2001 |
| DP-300504 | US | 09/648971 | 28-Aug-2000 | 6329779 | 11-Dec-2001 |
| DP-301058 | US | 09/774273 | 30-Jan-2001 | 6500030 | 31-Dec-2002 |
| DP-301097 | US | 09/541708 | 03-Apr-2000 | 6575607 | 10-Jun-2003 |
| DP-301098 | US | 09/541563 | 03-Apr-2000 | 6441726 | 27-Aug-2002 |
| DP-301126 | US | 09/648973 | 28-Aug-2000 | 6447131 | 10-Sep-2002 |
| DP-301180 | US | 09/570691 | 12-May-2000 | 6407696 | 18-Jun-2002 |
| DP-301258 | US | 09/586802 | 05-Jun-2000 | 6380757 | 30-Apr-2002 |
| DP-301347 | US | 09/512725 | 24-Feb-2000 | 6305957 | 23-Oct-2001 |
| DP-301395 | US | 09/579481 | 30-May-2000 | 6356827 | 12-Mar-2002 |
| DP-301580 | US | 09/579482 | 30-May-2000 | 6408784 | 25-Jun-2002 |
| DP-301685 | US | 09/648972 | 28-Aug-2000 | 6434486 | 13-Aug-2002 |
| DP-301916 | US | 09/626996 | 27-Jul-2000 | 6404157 | 11-Jun-2002 |
| DP-302024 | US | 09/580618 | 30-May-2000 | 6302552 | 16-Oct-2001 |
| DP-302041 | US | 09/650131 | 29-Aug-2000 | 6422062 | 23-Jul-2002 |
| DP-302088 | US | 09/696748 | 24-Oct-2000 | 6404328 | 11-Jun-2002 |
| DP-302089 | US | 09/847207 | 03-May-2001 | 6469659 | 22-Oct-2002 |
| DP-302127 | US | 09/944617 | 04-Sep-2001 | 6384355 | 07-May-2002 |
| DP-302135 | US | 09/840553 | 23-Apr-2001 | 6559763 | 06-May-2003 |
| DP-302559 | US | 09/747434 | 22-Dec-2000 | 6613468 | 02-Sep-2003 |
| DP-302676 | US | 09/689720 | 13-Oct-2000 | 6678166 | 13-Jan-2004 |
| DP-302729 | US | 09/821870 | 30-Mar-2001 | 6464050 | 15-Oct-2002 |
| DP-302729 | US | 10/200648 | 22-Jul-2002 | 6662912 | 16-Dec-2003 |
| DP-302748 | US | 09/567527 | 09-May-2000 | 6366153 | 02-Apr-2002 |
| DP-302749 | US | 09/816024 | 26-Mar-2001 | 6479766 | 12-Nov-2002 |
| DP-302773 | US | 09/793452 | 27-Feb-2001 | 6723979 | 20-Apr-2004 |
| DP-302870 | US | 09/785978 | 20-Feb-2001 | 6447132 | 10-Sep-2002 |
| DP-302891 | US | 09/852245 | 09-May-2001 | 6620535 | 16-Sep-2003 |
| DP-302892 | US | 09/852246 | 09-May-2001 | 6692859 | 17-Feb-2004 |
| DP-302902 | US | 09/781687 | 12-Feb-2001 | 7037615 | 02-May-2006 |
| DP-303016 | US | 09/690141 | 16-Oct-2000 | 6553294 | 22-Apr-2003 |
| DP-303025 | US | 10/294492 | 14-Nov-2002 | 6828559 | 07-Dec-2004 |
| DP-303150 | US | 09/775301 | 01-Feb-2001 | 6435530 | 20-Aug-2002 |
| DP-303229 | US | 09/895742 | 02-Jul-2001 | 6542802 | 01-Apr-2003 |
| DP-303232 | US | 09/690104 | 16-Oct-2000 | 6453224 | 17-Sep-2002 |
| DP-303233 | US | 09/688586 | 16-Oct-2000 | 6548914 | 15-Apr-2003 |
| DP-303258 | US | 10/348356 | 21-Jan-2003 | 7000946 | 21-Feb-2006 |
| DP-303289 | US | 09/725645 | 29-Nov-2000 | 6542792 | 01-Apr-2003 |
| DP-303407 | US | 09/935072 | 22-Aug-2001 | 6485337 | 26-Nov-2002 |
| DP-303460 | US | 09/888065 | 22-Jun-2001 | 6424898 | 23-Jul-2002 |
| DP-303528 | US | 09/796237 | 28-Feb-2001 | 6554318 | 29-Apr-2003 |
| DP-303565 | US | 10/604548 | 30-Jul-2003 | 6874378 | 05-Apr-2005 |
| DP-303730 | US | 09/767923 | 24-Jan-2001 | 6434958 | 20-Aug-2002 |
| DP-303736 | US | 10/078871 | 19-Feb-2002 | 6873714 | 29-Mar-2005 |
| DP-303917 | US | 09/940945 | 28-Aug-2001 | 6650252 | 18-Nov-2003 |

| | | | | | |
|---|---|---|---|---|---|
| DP-304272 | US | 10/068752 | 08-Feb-2002 | 6644689 | 11-Nov-2003 |
| DP-304294 | US | 10/115770 | 03-Apr-2002 | 6583753 | 24-Jun-2003 |
| DP-304345 | US | 09/907062 | 17-Jul-2001 | 6864015 | 08-Mar-2005 |
| DP-304449 | US | 10/393027 | 20-Mar-2003 | 7085687 | 01-Aug-2006 |
| DP-304589 | US | 10/350665 | 24-Jan-2003 | 6761568 | 13-Jul-2004 |
| DP-304664 | US | 10/072230 | 11-Feb-2002 | 6492938 | 10-Dec-2002 |
| DP-304693 | US | 10/106753 | 26-Mar-2002 | 6624503 | 23-Sep-2003 |
| DP-304694 | US | 10/061786 | 04-Feb-2002 | 6850825 | 01-Feb-2005 |
| DP-304695 | US | 10/078872 | 19-Feb-2002 | 6556166 | 29-Apr-2003 |
| DP-304828 | US | 10/075985 | 15-Feb-2002 | 7003032 | 21-Feb-2006 |
| DP-304867 | US | 11/095063 | 31-Mar-2005 | 8197981 | 12-Jun-2012 |
| DP-304936 | US | 10/015112 | 12-Dec-2001 | 6533230 | 18-Mar-2003 |
| DP-304959 | US | 11/347140 | 03-Feb-2006 | 7279243 | 09-Oct-2007 |
| DP-304989 | US | 09/996622 | 29-Nov-2001 | 7025903 | 11-Apr-2006 |
| DP-305026 | US | 10/068754 | 08-Feb-2002 | 6860224 | 01-Mar-2005 |
| DP-305031 | US | 10/099861 | 15-Mar-2002 | 6767411 | 27-Jul-2004 |
| DP-305060 | US | 09/851464 | 08-May-2001 | 6561305 | 13-May-2003 |
| DP-305063 | US | 09/897818 | 29-Jun-2001 | 6564694 | 20-May-2003 |
| DP-305090 | US | 10/079131 | 20-Feb-2002 | 6749038 | 15-Jun-2004 |
| DP-305117 | US | 10/327698 | 20-Dec-2002 | 6762427 | 13-Jul-2004 |
| DP-305158 | US | 10/083730 | 27-Feb-2002 | 6438477 | 20-Aug-2002 |
| DP-305159 | US | 10/083729 | 27-Feb-2002 | 6438476 | 20-Aug-2002 |
| DP-305214 | US | 10/000670 | 31-Oct-2001 | 6566616 | 20-May-2003 |
| DP-305298 | US | 09/972638 | 09-Oct-2001 | 6578871 | 17-Jun-2003 |
| DP-305537 | US | 10/075984 | 15-Feb-2002 | 6662094 | 09-Dec-2003 |
| DP-305561 | US | 10/140086 | 07-May-2002 | 6868745 | 22-Mar-2005 |
| DP-305608 | US | 10/281863 | 28-Oct-2002 | 7352355 | 01-Apr-2008 |
| DP-305712 | US | 10/099832 | 15-Mar-2002 | 6753780 | 22-Jun-2004 |
| DP-305907 | US | 90/007517 | 22-Apr-2005 | 6552294C1 | 19-Sep-2006 |
| DP-306006 | US | 10/082419 | 26-Feb-2002 | 6605877 | 12-Aug-2003 |
| DP-306032 | US | 10/670431 | 23-Sep-2003 | 6897819 | 24-May-2005 |
| DP-306104 | US | 10/103202 | 21-Mar-2002 | 6927674 | 09-Aug-2005 |
| DP-306152 | US | 10/042576 | 09-Jan-2002 | 6897770 | 24-May-2005 |
| DP-306152 | US | 09/730992 | 06-Dec-2000 | 6362731 | 26-Mar-2002 |
| DP-306187 | US | 10/154362 | 23-May-2002 | 6668221 | 23-Dec-2003 |
| DP-306215 | US | 10/319325 | 13-Dec-2002 | 6714848 | 30-Mar-2004 |
| DP-306300 | US | 10/112955 | 02-Apr-2002 | 6722922 | 20-Apr-2004 |
| DP-306314 | US | 10/243615 | 13-Sep-2002 | 6888265 | 03-May-2005 |
| DP-306356 | US | 10/122177 | 16-Apr-2002 | 6692316 | 17-Feb-2004 |
| DP-306520 | US | 09/245260 | 05-Feb-1999 | 6356851 | 12-Mar-2002 |
| DP-306615 | US | 10/216151 | 09-Aug-2002 | 6936989 | 30-Aug-2005 |
| DP-306663 | US | 10/159691 | 31-May-2002 | 6650978 | 18-Nov-2003 |
| DP-306974 | US | 10/391106 | 18-Mar-2003 | 6910827 | 28-Jun-2005 |
| DP-306976 | US | 10/107766 | 27-Mar-2002 | 6905901 | 14-Jun-2005 |
| DP-306988 | US | 10/264932 | 04-Oct-2002 | 6803743 | 12-Oct-2004 |
| DP-307001 | US | 10/447306 | 28-May-2003 | 6932769 | 23-Aug-2005 |
| DP-307020 | US | 10/205245 | 25-Jul-2002 | 6837751 | 04-Jan-2005 |
| DP-307046 | US | 10/263017 | 02-Oct-2002 | 6925114 | 02-Aug-2005 |
| DP-307054 | US | 10/061691 | 01-Feb-2002 | 6663250 | 16-Dec-2003 |
| DP-307073 | US | 10/358978 | 05-Feb-2003 | 6859144 | 22-Feb-2005 |
| DP-307106 | US | 10/718331 | 20-Nov-2003 | 7000948 | 21-Feb-2006 |
| DP-307424 | US | 10/159661 | 31-May-2002 | 6683534 | 27-Jan-2004 |
| DP-307459 | US | 10/325538 | 19-Dec-2002 | 6818842 | 16-Nov-2004 |
| DP-307499 | US | 10/170888 | 13-Jun-2002 | 6669426 | 30-Dec-2003 |
| DP-307520 | US | 10/317750 | 12-Dec-2002 | 7324715 | 29-Jan-2008 |
| DP-307529 | US | 10/229550 | 28-Aug-2002 | 7037349 | 02-May-2006 |

| | | | | | |
|---|---|---|---|---|---|
| DP-307541 | US | 10/229832 | 27-Aug-2002 | 7178139 | 13-Feb-2007 |
| DP-307603 | US | 10/226179 | 22-Aug-2002 | 6847001 | 25-Jan-2005 |
| DP-307616 | US | 10/186784 | 01-Jul-2002 | 6794987 | 21-Sep-2004 |
| DP-307767 | US | 10/784638 | 23-Feb-2004 | 7598846 | 06-Oct-2009 |
| DP-307853 | US | 10/680534 | 07-Oct-2003 | 7133752 | 07-Nov-2006 |
| DP-307898 | US | 10/348496 | 21-Jan-2003 | 7095501 | 22-Aug-2006 |
| DP-307941 | US | 10/653463 | 02-Sep-2003 | 6889146 | 03-May-2005 |
| DP-308059 | US | 11/580547 | 13-Oct-2006 | 7252559 | 07-Aug-2007 |
| DP-308099 | US | 10/377424 | 28-Feb-2003 | 6833535 | 21-Dec-2004 |
| DP-308120 | US | 10/178829 | 24-Jun-2002 | 6984466 | 10-Jan-2006 |
| DP-308121 | US | 11/593672 | 07-Nov-2006 | 7435490 | 14-Oct-2008 |
| DP-308126 | US | 10/178863 | 24-Jun-2002 | 7001682 | 21-Feb-2006 |
| DP-308128 | US | 10/178282 | 24-Jun-2002 | 7147953 | 12-Dec-2006 |
| DP-308129 | US | 10/178825 | 24-Jun-2002 | 7144644 | 05-Dec-2006 |
| DP-308130 | US | 10/178114 | 24-Jun-2002 | 6942942 | 13-Sep-2005 |
| DP-308132 | US | 10/178860 | 24-Jun-2002 | 6967064 | 22-Nov-2005 |
| DP-308133 | US | 10/178878 | 24-Jun-2002 | 7279246 | 09-Oct-2007 |
| DP-308136 | US | 10/178808 | 24-Jun-2002 | 6921596 | 26-Jul-2005 |
| DP-308137 | US | 10/178125 | 24-Jun-2002 | 7410016 | 12-Aug-2008 |
| DP-308138 | US | 10/178133 | 24-Jun-2002 | 7422812 | 09-Sep-2008 |
| DP-308141 | US | 10/357748 | 04-Feb-2003 | 7001685 | 21-Feb-2006 |
| DP-308160 | US | 10/238093 | 10-Sep-2002 | 7537849 | 26-May-2009 |
| DP-308207 | US | 10/353304 | 29-Jan-2003 | 7131264 | 07-Nov-2006 |
| DP-308217 | US | 11/199533 | 08-Aug-2005 | 7582375 | 01-Sep-2009 |
| DP-308223 | US | 10/389452 | 14-Mar-2003 | 7008716 | 07-Mar-2006 |
| DP-308224 | US | 10/666768 | 18-Sep-2003 | 6997278 | 14-Feb-2006 |
| DP-308423 | US | 10/722706 | 25-Nov-2003 | 7512461 | 31-Mar-2009 |
| DP-308580 | US | 10/706001 | 12-Nov-2003 | 7131665 | 07-Nov-2006 |
| DP-308638 | US | 10/448683 | 30-May-2003 | 6739889 | 25-May-2004 |
| DP-308723 | US | 10/291913 | 11-Nov-2002 | 7202792 | 10-Apr-2007 |
| DP-308753 | US | 10/653698 | 02-Sep-2003 | 7024294 | 04-Apr-2006 |
| DP-308846 | US | 10/606849 | 26-Jun-2003 | 7201984 | 10-Apr-2007 |
| DP-308877 | US | 10/391107 | 18-Mar-2003 | 7412058 | 12-Aug-2008 |
| DP-308984 | US | 10/628822 | 28-Jul-2003 | 7606327 | 20-Oct-2009 |
| DP-309050 | US | 10/606919 | 26-Jun-2003 | 6824406 | 30-Nov-2004 |
| DP-309055 | US | 10/665095 | 17-Sep-2003 | 6886417 | 03-May-2005 |
| DP-309063 | US | 10/804245 | 18-Mar-2004 | 7120554 | 10-Oct-2006 |
| DP-309088 | US | 10/607661 | 27-Jun-2003 | 7064721 | 20-Jun-2006 |
| DP-309154 | US | 10/603540 | 25-Jun-2003 | 7162153 | 09-Jan-2007 |
| DP-309213 | US | 10/447375 | 29-May-2003 | 6917890 | 12-Jul-2005 |
| DP-309214 | US | 10/461097 | 13-Jun-2003 | 7021811 | 04-Apr-2006 |
| DP-309337 | US | 10/761580 | 21-Jan-2004 | 7457699 | 25-Nov-2008 |
| DP-309432 | US | 10/607609 | 27-Jun-2003 | 7217300 | 15-May-2007 |
| DP-309451 | US | 11/825037 | 03-Jul-2007 | 7575826 | 18-Aug-2009 |
| DP-309549 | US | 11/019041 | 21-Dec-2004 | 7166001 | 23-Jan-2007 |
| DP-309576 | US | 10/784648 | 23-Feb-2004 | 7002699 | 21-Feb-2006 |
| DP-309644 | US | 11/194173 | 01-Aug-2005 | 7350954 | 01-Apr-2008 |
| DP-309659 | US | 10/700208 | 03-Nov-2003 | 7280662 | 09-Oct-2007 |
| DP-309678 | US | 11/098143 | 31-Mar-2005 | 7523237 | 21-Apr-2009 |
| DP-309769 | US | 10/618952 | 14-Jul-2003 | 7308347 | 11-Dec-2007 |
| DP-309772 | US | 10/618905 | 14-Jul-2003 | 6987229 | 17-Jan-2006 |
| DP-309779 | US | 10/843775 | 12-May-2004 | 7015709 | 21-Mar-2006 |
| DP-309795 | US | 10/763910 | 23-Jan-2004 | 6950629 | 27-Sep-2005 |
| DP-309820 | US | 10/741590 | 22-Dec-2003 | 7261604 | 28-Aug-2007 |
| DP-309911 | US | 10/714009 | 13-Nov-2003 | 7231177 | 12-Jun-2007 |
| DP-309976 | US | 10/781608 | 18-Feb-2004 | 7190325 | 13-Mar-2007 |

| | | | | | |
|---|---|---|---|---|---|
| DP-310048 | US | 10/754055 | 08-Jan-2004 | 7206679 | 17-Apr-2007 |
| DP-310128 | US | 10/679744 | 06-Oct-2003 | 6925370 | 02-Aug-2005 |
| DP-310163 | US | 10/902672 | 29-Jul-2004 | 7499283 | 03-Mar-2009 |
| DP-310180 | US | 11/243556 | 05-Oct-2005 | 7736903 | 15-Jun-2010 |
| DP-310191 | US | 10/965990 | 15-Oct-2004 | 7252400 | 07-Aug-2007 |
| DP-310204 | US | 10/679802 | 06-Oct-2003 | 6966233 | 22-Nov-2005 |
| DP-310363 | US | 10/643044 | 18-Aug-2003 | 6927678 | 09-Aug-2005 |
| DP-310378 | US | 10/797417 | 10-Mar-2004 | 7441257 | 21-Oct-2008 |
| DP-310617 | US | 11/134646 | 20-May-2005 | 7351102 | 01-Apr-2008 |
| DP-310627 | US | 10/784649 | 23-Feb-2004 | 6935687 | 30-Aug-2005 |
| DP-310630 | US | 10/884737 | 02-Jul-2004 | 7163075 | 16-Jan-2007 |
| DP-310648 | US | 11/250174 | 13-Oct-2005 | 7449648 | 11-Nov-2008 |
| DP-310686 | US | 10/903543 | 30-Jul-2004 | 7191269 | 13-Mar-2007 |
| DP-310692 | US | 10/757226 | 14-Jan-2004 | 7149089 | 12-Dec-2006 |
| DP-310734 | US | 10/909186 | 30-Jul-2004 | 7366643 | 29-Apr-2008 |
| DP-310764 | US | 10/566035 | 05-Feb-2008 | 7875997 | 25-Jan-2011 |
| DP-310806 | US | 10/847944 | 18-May-2004 | 7230998 | 12-Jun-2007 |
| DP-310806 | US | 10/995721 | 22-Nov-2004 | 7386056 | 10-Jun-2008 |
| DP-310806 | US | 11/789600 | 25-Apr-2007 | 7656966 | 02-Feb-2010 |
| DP-310812 | US | 10/909577 | 02-Aug-2004 | 7645532 | 12-Jan-2010 |
| DP-310815 | US | 10/946657 | 22-Sep-2004 | 7215713 | 08-May-2007 |
| DP-310822 | US | 10/946678 | 22-Sep-2004 | 7280613 | 09-Oct-2007 |
| DP-310823 | US | 11/474735 | 26-Jun-2006 | 7751497 | 06-Jul-2010 |
| DP-310823 | US | 11/474747 | 26-Jun-2006 | 7657225 | 02-Feb-2010 |
| DP-310824 | US | 10/995946 | 22-Nov-2004 | 7230992 | 12-Jun-2007 |
| DP-310831 | US | 10/767989 | 29-Jan-2004 | 6896524 | 24-May-2005 |
| DP-310833 | US | 10/831828 | 26-Apr-2004 | 7095569 | 22-Aug-2006 |
| DP-310844 | US | 10/813192 | 29-Mar-2004 | 7331671 | 19-Feb-2008 |
| DP-310845 | US | 10/828005 | 20-Apr-2004 | 7362885 | 22-Apr-2008 |
| DP-310855 | US | 10/931665 | 01-Sep-2004 | 7512159 | 31-Mar-2009 |
| DP-310871 | US | 11/003897 | 03-Dec-2004 | 7785725 | 31-Aug-2010 |
| DP-310891 | US | 10/887502 | 08-Jul-2004 | 7473228 | 06-Jan-2009 |
| DP-310926 | US | 10/995013 | 22-Nov-2004 | 7499696 | 03-Mar-2009 |
| DP-310950 | US | 10/793302 | 04-Mar-2004 | 7326482 | 05-Feb-2008 |
| DP-310952 | US | 10/892591 | 15-Jul-2004 | 7179558 | 20-Feb-2007 |
| DP-310999 | US | 10/974346 | 27-Oct-2004 | 7009551 | 07-Mar-2006 |
| DP-311125 | US | 10/740333 | 18-Dec-2003 | 7049859 | 23-May-2006 |
| DP-311161 | US | 11/045841 | 28-Jan-2005 | 7021952 | 04-Apr-2006 |
| DP-311162 | US | 11/035600 | 14-Jan-2005 | 7156697 | 02-Jan-2007 |
| DP-311257 | US | 10/797407 | 10-Mar-2004 | 7039514 | 02-May-2006 |
| DP-311280 | US | 11/068024 | 28-Feb-2005 | 7306755 | 11-Dec-2007 |
| DP-311280 | US | 11/983252 | 08-Nov-2007 | 7997542 | 16-Aug-2011 |
| DP-311311 | US | 10/734317 | 12-Dec-2003 | 7423665 | 09-Sep-2008 |
| DP-311315 | US | 11/033677 | 12-Jan-2005 | 7700044 | 20-Apr-2010 |
| DP-311364 | US | 10/956318 | 01-Oct-2004 | 7504839 | 17-Mar-2009 |
| DP-311370 | US | 11/082608 | 17-Mar-2005 | 7697766 | 13-Apr-2010 |
| DP-311375 | US | 10/793354 | 04-Mar-2004 | 7674538 | 09-Mar-2010 |
| DP-311376 | US | 10/793303 | 04-Mar-2004 | 7306871 | 11-Dec-2007 |
| DP-311385 | US | 11/150684 | 10-Jun-2005 | 7689008 | 30-Mar-2010 |
| DP-311441 | US | 10/711476 | 21-Sep-2004 | 7294827 | 13-Nov-2007 |
| DP-311443 | US | 11/056904 | 11-Feb-2005 | 7623966 | 24-Nov-2009 |
| DP-311476 | US | 10/919163 | 16-Aug-2004 | 7095567 | 22-Aug-2006 |
| DP-311560 | US | 11/053521 | 08-Feb-2005 | 7254820 | 07-Aug-2007 |
| DP-311591 | US | 11/282135 | 18-Nov-2005 | 7323686 | 29-Jan-2008 |
| DP-311635 | US | 10/999776 | 30-Nov-2004 | 7008270 | 07-Mar-2006 |
| DP-311685 | US | 12/482508 | 11-Jun-2009 | 7818989 | 26-Oct-2010 |

| | | | | | |
|---|---|---|---|---|---|
| DP-311693 | US | 10/958815 | 05-Oct-2004 | 7424354 | 09-Sep-2008 |
| DP-311701 | US | 10/986240 | 11-Nov-2004 | 7364301 | 29-Apr-2008 |
| DP-311719 | US | 11/238776 | 29-Sep-2005 | 7499779 | 03-Mar-2009 |
| DP-311720 | US | 10/958749 | 05-Oct-2004 | 7660655 | 09-Feb-2010 |
| DP-311725 | US | 11/116509 | 28-Apr-2005 | 7575665 | 18-Aug-2009 |
| DP-311866 | US | 11/149816 | 09-Jun-2005 | 7623950 | 24-Nov-2009 |
| DP-311869 | US | 11/031232 | 07-Jan-2005 | 7230523 | 12-Jun-2007 |
| DP-311871 | US | 11/126606 | 11-May-2005 | 7791670 | 07-Sep-2010 |
| DP-311953 | US | 11/132581 | 19-May-2005 | 7697886 | 13-Apr-2010 |
| DP-311969 | US | 10/974282 | 27-Oct-2004 | 7777778 | 17-Aug-2010 |
| DP-311981 | US | 11/051833 | 04-Feb-2005 | 7026549 | 11-Apr-2006 |
| DP-311983 | US | 10/808835 | 25-Mar-2004 | 7148482 | 12-Dec-2006 |
| DP-312070 | US | 10/939778 | 13-Sep-2004 | 7146276 | 05-Dec-2006 |
| DP-312079 | US | 11/146921 | 06-Jun-2005 | 7385520 | 10-Jun-2008 |
| DP-312081 | US | 11/146939 | 06-Jun-2005 | 7403845 | 22-Jul-2008 |
| DP-312097 | US | 11/029144 | 04-Jan-2005 | 7693481 | 06-Apr-2010 |
| DP-312098 | US | 11/087041 | 22-Mar-2005 | 7050908 | 23-May-2006 |
| DP-312197 | US | 11/145647 | 06-Jun-2005 | 7781123 | 24-Aug-2010 |
| DP-312230 | US | 11/153696 | 15-Jun-2005 | 7564907 | 21-Jul-2009 |
| DP-312231 | US | 11/201718 | 11-Aug-2005 | 7720184 | 18-May-2010 |
| DP-312232 | US | 11/201883 | 11-Aug-2005 | 7590399 | 15-Sep-2009 |
| DP-312235 | US | 11/069254 | 01-Mar-2005 | 7830983 | 09-Nov-2010 |
| DP-312236 | US | 11/122196 | 03-May-2005 | 7350934 | 01-Apr-2008 |
| DP-312277 | US | 13/785535 | 05-Mar-2013 | 8642345 | 04-Feb-2014 |
| DP-312277 | US | 11/903141 | 20-Sep-2007 | 8455262 | 04-Jun-2013 |
| DP-312277 | US | 11/033703 | 12-Jan-2005 | 7279132 | 09-Oct-2007 |
| DP-312329 | US | 11/147148 | 06-Jun-2005 | 7478875 | 20-Jan-2009 |
| DP-312354 | US | 12/210709 | 15-Sep-2008 | 7937672 | 03-May-2011 |
| DP-312427 | US | 11/088129 | 23-Mar-2005 | 7773697 | 10-Aug-2010 |
| DP-312428 | US | 11/143044 | 02-Jun-2005 | 7822149 | 26-Oct-2010 |
| DP-312447 | US | 11/199800 | 09-Aug-2005 | 7439866 | 21-Oct-2008 |
| DP-312484 | US | 10/921722 | 19-Aug-2004 | 7269483 | 11-Sep-2007 |
| DP-312498 | US | 11/172684 | 01-Jul-2005 | 7474262 | 06-Jan-2009 |
| DP-312499 | US | 10/978260 | 30-Oct-2004 | 7119705 | 10-Oct-2006 |
| DP-312500 | US | 11/070068 | 02-Mar-2005 | 7176390 | 13-Feb-2007 |
| DP-312506 | US | 11/143054 | 02-Jun-2005 | 7539661 | 26-May-2009 |
| DP-312528 | US | 11/147906 | 08-Jun-2005 | 7570170 | 04-Aug-2009 |
| DP-312542 | US | 11/096532 | 01-Apr-2005 | 7324191 | 29-Jan-2008 |
| DP-312606 | US | 11/082546 | 17-Mar-2005 | 7486835 | 03-Feb-2009 |
| DP-312647 | US | 10/919162 | 16-Aug-2004 | 7403848 | 22-Jul-2008 |
| DP-312660 | US | 11/158369 | 22-Jun-2005 | 7422819 | 09-Sep-2008 |
| DP-312701 | US | 11/088420 | 24-Mar-2005 | 7094081 | 22-Aug-2006 |
| DP-312707 | US | 11/073438 | 07-Mar-2005 | 7552792 | 30-Jun-2009 |
| DP-312707 | US | 12/467721 | 18-May-2009 | 7798276 | 21-Sep-2010 |
| DP-312716 | US | 11/113521 | 25-Apr-2005 | 7295771 | 13-Nov-2007 |
| DP-312721 | US | 11/221592 | 08-Sep-2005 | 7288009 | 30-Oct-2007 |
| DP-312723 | US | 11/222028 | 08-Sep-2005 | 7325870 | 05-Feb-2008 |
| DP-312727 | US | 11/222229 | 08-Sep-2005 | 7410212 | 12-Aug-2008 |
| DP-312733 | US | 11/146928 | 06-Jun-2005 | 7224270 | 29-May-2007 |
| DP-312785 | US | 11/159908 | 23-Jun-2005 | 7048584 | 23-May-2006 |
| DP-312807 | US | 10/940397 | 14-Sep-2004 | 7412314 | 12-Aug-2008 |
| DP-312822 | US | 11/133512 | 20-May-2005 | 7998632 | 16-Aug-2011 |
| DP-312844 | US | 11/330028 | 10-Jan-2006 | 7546194 | 09-Jun-2009 |
| DP-312861 | US | 11/352110 | 10-Feb-2006 | 8218411 | 10-Jul-2012 |
| DP-312871 | US | 11/167790 | 27-Jun-2005 | 7611327 | 03-Nov-2009 |
| DP-312913 | US | 11/135176 | 23-May-2005 | 7501938 | 10-Mar-2009 |

| | | | | | |
|---|---|---|---|---|---|
| DP-312914 | US | 11/123421 | 06-May-2005 | 7425889 | 16-Sep-2008 |
| DP-312956 | US | 11/147905 | 08-Jun-2005 | 7327225 | 05-Feb-2008 |
| DP-312987 | US | 11/362672 | 27-Feb-2006 | 7180257 | 20-Feb-2007 |
| DP-312988 | US | 11/362665 | 27-Feb-2006 | 7589487 | 15-Sep-2009 |
| DP-312989 | US | 11/362643 | 27-Feb-2006 | 7474068 | 06-Jan-2009 |
| DP-312989 | US | 12/218712 | 17-Jul-2008 | 7538500 | 26-May-2009 |
| DP-313008 | US | 10/978660 | 01-Nov-2004 | 7094099 | 22-Aug-2006 |
| DP-313030 | US | 11/149820 | 09-Jun-2005 | 7253722 | 07-Aug-2007 |
| DP-313032 | US | 11/189260 | 26-Jul-2005 | 7415337 | 19-Aug-2008 |
| DP-313039 | US | 11/146926 | 06-Jun-2005 | 7422283 | 09-Sep-2008 |
| DP-313059 | US | 11/364320 | 28-Feb-2006 | 7623594 | 24-Nov-2009 |
| DP-313066 | US | 11/363218 | 27-Feb-2006 | 7352145 | 01-Apr-2008 |
| DP-313071 | US | 11/292179 | 01-Dec-2005 | 8658013 | 25-Feb-2014 |
| DP-313119 | US | 11/417409 | 04-May-2006 | 7176776 | 13-Feb-2007 |
| DP-313135 | US | 11/171069 | 30-Jun-2005 | 7372055 | 13-May-2008 |
| DP-313273 | US | 11/212052 | 25-Aug-2005 | 7492962 | 17-Feb-2009 |
| DP-313275 | US | 11/183639 | 18-Jul-2005 | 7348880 | 25-Mar-2008 |
| DP-313277 | US | 11/292553 | 02-Dec-2005 | 7463161 | 09-Dec-2008 |
| DP-313279 | US | 11/156124 | 17-Jun-2005 | 7474264 | 06-Jan-2009 |
| DP-313289 | US | 11/219400 | 02-Sep-2005 | 7324043 | 29-Jan-2008 |
| DP-313326 | US | 11/179866 | 12-Jul-2005 | 7245261 | 17-Jul-2007 |
| DP-313330 | US | 11/313204 | 20-Dec-2005 | 7436270 | 14-Oct-2008 |
| DP-313340 | US | 11/271716 | 09-Nov-2005 | 7861517 | 04-Jan-2011 |
| DP-313414 | US | 11/150730 | 09-Jun-2005 | 7349783 | 25-Mar-2008 |
| DP-313424 | US | 11/155429 | 17-Jun-2005 | 7322392 | 29-Jan-2008 |
| DP-313477 | US | 11/191856 | 28-Jul-2005 | 7944967 | 17-May-2011 |
| DP-313480 | US | 11/138532 | 26-May-2005 | 7828478 | 09-Nov-2010 |
| DP-313484 | US | 11/496803 | 01-Aug-2006 | 7710249 | 04-May-2010 |
| DP-313496 | US | 11/231703 | 21-Sep-2005 | 7858214 | 28-Dec-2010 |
| DP-313503 | US | 11/353523 | 14-Feb-2006 | 7351973 | 01-Apr-2008 |
| DP-313507 | US | 11/268120 | 07-Nov-2005 | 7480351 | 20-Jan-2009 |
| DP-313528 | US | 11/219207 | 02-Sep-2005 | 7706978 | 27-Apr-2010 |
| DP-313555 | US | 11/110043 | 20-Apr-2005 | 7931707 | 26-Apr-2011 |
| DP-313595 | US | 11/219233 | 02-Sep-2005 | 7472007 | 30-Dec-2008 |
| DP-313597 | US | 11/158388 | 22-Jun-2005 | 7528731 | 05-May-2009 |
| DP-313600 | US | 11/261697 | 28-Oct-2005 | 7252553 | 07-Aug-2007 |
| DP-313619 | US | 11/174162 | 30-Jun-2005 | 7438152 | 21-Oct-2008 |
| DP-313636 | US | 11/222285 | 08-Sep-2005 | 7548270 | 16-Jun-2009 |
| DP-313659 | US | 11/287954 | 28-Nov-2005 | 7580325 | 25-Aug-2009 |
| DP-313663 | US | 11/287841 | 28-Nov-2005 | 7918381 | 05-Apr-2011 |
| DP-313712 | US | 11/250678 | 14-Oct-2005 | 8168347 | 01-May-2012 |
| DP-313772 | US | 11/317431 | 23-Dec-2005 | 7423540 | 09-Sep-2008 |
| DP-313786 | US | 11/351010 | 09-Feb-2006 | 7310190 | 18-Dec-2007 |
| DP-313789 | US | 11/218671 | 02-Sep-2005 | 7505841 | 17-Mar-2009 |
| DP-313799 | US | 11/365305 | 01-Mar-2006 | 7204716 | 17-Apr-2007 |
| DP-313827 | US | 11/496598 | 31-Jul-2006 | 7241156 | 10-Jul-2007 |
| DP-313832 | US | 11/370285 | 08-Mar-2006 | 8042631 | 25-Oct-2011 |
| DP-313852 | US | 11/253515 | 19-Oct-2005 | 7657994 | 09-Feb-2010 |
| DP-313863 | US | 11/475636 | 27-Jun-2006 | 7659639 | 09-Feb-2010 |
| DP-313899 | US | 11/403271 | 13-Apr-2006 | 7351098 | 01-Apr-2008 |
| DP-313992 | US | 11/300621 | 14-Dec-2005 | 7650034 | 19-Jan-2010 |
| DP-313993 | US | 11/452116 | 13-Jun-2006 | 7742621 | 22-Jun-2010 |
| DP-314016 | US | 11/327274 | 06-Jan-2006 | 7201595 | 10-Apr-2007 |
| DP-314016 | US | 11/712006 | 28-Feb-2007 | 7749012 | 06-Jul-2010 |
| DP-314034 | US | 11/523282 | 19-Sep-2006 | 7267583 | 11-Sep-2007 |
| DP-314084 | US | 11/282024 | 17-Nov-2005 | 7558555 | 07-Jul-2009 |

| | | | | | |
|---|---|---|---|---|---|
| DP-314094 | US | 11/243011 | 04-Oct-2005 | 7468660 | 23-Dec-2008 |
| DP-314122 | US | 11/509858 | 25-Aug-2006 | 7439458 | 21-Oct-2008 |
| DP-314123 | US | 11/496190 | 31-Jul-2006 | 7462795 | 09-Dec-2008 |
| DP-314126 | US | 11/311884 | 19-Dec-2005 | 7697913 | 13-Apr-2010 |
| DP-314165 | US | 11/473625 | 23-Jun-2006 | 7468673 | 23-Dec-2008 |
| DP-314197 | US | 11/239646 | 29-Sep-2005 | 7217891 | 15-May-2007 |
| DP-314205 | US | 11/592824 | 03-Nov-2006 | 7876926 | 25-Jan-2011 |
| DP-314219 | US | 11/341148 | 27-Jan-2006 | 7676892 | 16-Mar-2010 |
| DP-314246 | US | 11/543604 | 05-Oct-2006 | 7448924 | 11-Nov-2008 |
| DP-314262 | US | 11/527907 | 27-Sep-2006 | 7610250 | 27-Oct-2009 |
| DP-314306 | US | 11/494786 | 26-Jul-2006 | 7689325 | 30-Mar-2010 |
| DP-314316 | US | 11/437363 | 19-May-2006 | 7710333 | 04-May-2010 |
| DP-314335 | US | 11/787497 | 17-Apr-2007 | 7675820 | 09-Mar-2010 |
| DP-314338 | US | 11/407454 | 20-Apr-2006 | 7565126 | 21-Jul-2009 |
| DP-314360 | US | 11/444841 | 01-Jun-2006 | 7578593 | 25-Aug-2009 |
| DP-314367 | US | 11/706017 | 14-Feb-2007 | 7477181 | 13-Jan-2009 |
| DP-314372 | US | 11/403358 | 13-Apr-2006 | 7635443 | 22-Dec-2009 |
| DP-314396 | US | 11/450647 | 09-Jun-2006 | 7594629 | 29-Sep-2009 |
| DP-314409 | US | 11/639836 | 15-Dec-2006 | 7371115 | 13-May-2008 |
| DP-314418 | US | 11/523986 | 20-Sep-2006 | 7676087 | 09-Mar-2010 |
| DP-314496 | US | 11/643522 | 21-Dec-2006 | 7351073 | 01-Apr-2008 |
| DP-314537 | US | 11/403270 | 13-Apr-2006 | 7347738 | 25-Mar-2008 |
| DP-314545 | US | 11/406622 | 19-Apr-2006 | 7332674 | 19-Feb-2008 |
| DP-314551 | US | 11/406933 | 19-Apr-2006 | 7347743 | 25-Mar-2008 |
| DP-314573 | US | 11/542980 | 04-Oct-2006 | 7646422 | 12-Jan-2010 |
| DP-314578 | US | 11/595663 | 10-Nov-2006 | 7331831 | 19-Feb-2008 |
| DP-314633 | US | 11/732296 | 03-Apr-2007 | 7745771 | 29-Jun-2010 |
| DP-314670 | US | 11/523358 | 19-Sep-2006 | 7179136 | 20-Feb-2007 |
| DP-314691 | US | 11/523414 | 19-Sep-2006 | 7396255 | 08-Jul-2008 |
| DP-314717 | US | 11/484873 | 11-Jul-2006 | 7835834 | 16-Nov-2010 |
| DP-314719 | US | 12/001293 | 11-Dec-2007 | 7868828 | 11-Jan-2011 |
| DP-314728 | US | 11/493279 | 26-Jul-2006 | 7940955 | 10-May-2011 |
| DP-314752 | US | 11/452669 | 14-Jun-2006 | 7370970 | 13-May-2008 |
| DP-314792 | US | 11/609778 | 12-Dec-2006 | 7439507 | 21-Oct-2008 |
| DP-314840 | US | 11/796083 | 26-Apr-2007 | 7351089 | 01-Apr-2008 |
| DP-314863 | US | 11/982653 | 02-Nov-2007 | 7512516 | 31-Mar-2009 |
| DP-314866 | US | 11/493264 | 26-Jul-2006 | 7278890 | 09-Oct-2007 |
| DP-314893 | US | 11/645849 | 27-Dec-2006 | 8356682 | 22-Jan-2013 |
| DP-314896 | US | 11/527908 | 27-Sep-2006 | 7758989 | 20-Jul-2010 |
| DP-314897 | US | 11/406873 | 19-Apr-2006 | 7700215 | 20-Apr-2010 |
| DP-314914 | US | 11/496682 | 31-Jul-2006 | 7201587 | 10-Apr-2007 |
| DP-314951 | US | 11/442560 | 25-May-2006 | 7266469 | 04-Sep-2007 |
| DP-314983 | US | 11/640164 | 15-Dec-2006 | 7423224 | 09-Sep-2008 |
| DP-315071 | US | 11/544440 | 04-Oct-2006 | 7917111 | 29-Mar-2011 |
| DP-315096 | US | 12/215012 | 24-Jun-2008 | 7687720 | 30-Mar-2010 |
| DP-315096 | US | 11/473648 | 23-Jun-2006 | 7408116 | 05-Aug-2008 |
| DP-315112 | US | 11/711258 | 27-Feb-2007 | 7438585 | 21-Oct-2008 |
| DP-315125 | US | 11/483788 | 10-Jul-2006 | 7534962 | 19-May-2009 |
| DP-315130 | US | 11/406958 | 19-Apr-2006 | 7771884 | 10-Aug-2010 |
| DP-315140 | US | 11/784125 | 05-Apr-2007 | 8034499 | 11-Oct-2011 |
| DP-315142 | US | 11/895034 | 22-Aug-2007 | 7759901 | 20-Jul-2010 |
| DP-315171 | US | 11/707292 | 16-Feb-2007 | 7413479 | 19-Aug-2008 |
| DP-315174 | US | 11/961220 | 20-Dec-2007 | 7735920 | 15-Jun-2010 |
| DP-315191 | US | 11/519043 | 11-Sep-2006 | 7675296 | 09-Mar-2010 |
| DP-315268 | US | 11/459415 | 24-Jul-2006 | 7804796 | 28-Sep-2010 |
| DP-315293 | US | 11/633958 | 05-Dec-2006 | 7615713 | 10-Nov-2009 |

| | | | | | |
|---|---|---|---|---|---|
| DP-315309 | US | 11/478347 | 29-Jun-2006 | 7805231 | 28-Sep-2010 |
| DP-315350 | US | 11/519537 | 12-Sep-2006 | 7410114 | 12-Aug-2008 |
| DP-315362 | US | 11/827442 | 11-Jul-2007 | 7645943 | 12-Jan-2010 |
| DP-315373 | US | 11/717461 | 13-Mar-2007 | 7438497 | 21-Oct-2008 |
| DP-315389 | US | 11/708446 | 20-Feb-2007 | 7726985 | 01-Jun-2010 |
| DP-315392 | US | 11/804885 | 21-May-2007 | 7972422 | 05-Jul-2011 |
| DP-315425 | US | 11/654823 | 18-Jan-2007 | 7384309 | 10-Jun-2008 |
| DP-315428 | US | 11/654861 | 18-Jan-2007 | 7503793 | 17-Mar-2009 |
| DP-315449 | US | 11/706016 | 14-Feb-2007 | 7434481 | 14-Oct-2008 |
| DP-315485 | US | 12/011885 | 30-Jan-2008 | 8545153 | 01-Oct-2013 |
| DP-315488 | US | 11/708500 | 20-Feb-2007 | 7800344 | 21-Sep-2010 |
| DP-315516 | US | 11/600396 | 16-Nov-2006 | 7408123 | 05-Aug-2008 |
| DP-315567 | US | 11/890066 | 03-Aug-2007 | 7940962 | 10-May-2011 |
| DP-315597 | US | 11/712719 | 01-Mar-2007 | 7668525 | 23-Feb-2010 |
| DP-315608 | US | 11/779114 | 17-Jul-2007 | 7618057 | 17-Nov-2009 |
| DP-315624 | US | 14/048082 | 08-Oct-2013 | 8988884 | 24-Mar-2015 |
| DP-315624 | US | 11/893357 | 15-Aug-2007 | 7733659 | 08-Jun-2010 |
| DP-315624 | US | 12/713423 | 26-Feb-2010 | 8087165 | 03-Jan-2012 |
| DP-315624 | US | 12/759731 | 14-Apr-2010 | 8284559 | 09-Oct-2012 |
| DP-315624 | US | 12/764195 | 21-Apr-2010 | 8035976 | 11-Oct-2011 |
| DP-315624 | US | 13/208635 | 12-Aug-2011 | 8493739 | 23-Jul-2013 |
| DP-315624 | US | 13/208655 | 12-Aug-2011 | 8498126 | 30-Jul-2013 |
| DP-315624 | US | 13/208670 | 12-Aug-2011 | 8570757 | 29-Oct-2013 |
| DP-315624 | US | 13/208687 | 12-Aug-2011 | 8625292 | 07-Jan-2014 |
| DP-315624 | US | 13/208714 | 12-Aug-2011 | 8731862 | 20-May-2014 |
| DP-315624 | US | 13/208727 | 12-Aug-2011 | 8477509 | 02-Jul-2013 |
| DP-315624 | US | 13/208746 | 12-Aug-2011 | 8593821 | 26-Nov-2013 |
| DP-315624 | US | 13/208769 | 12-Aug-2011 | 8599568 | 03-Dec-2013 |
| DP-315624 | US | 13/208795 | 12-Aug-2011 | 8625293 | 07-Jan-2014 |
| DP-315624 | US | 13/903335 | 28-May-2013 | 8982561 | 17-Mar-2015 |
| DP-315624 | US | 13/905246 | 30-May-2013 | 8947860 | 03-Feb-2015 |
| DP-315624 | US | 13/479888 | 24-May-2012 | 8724335 | 13-May-2014 |
| DP-315624 | US | 13/479914 | 24-May-2012 | 8830687 | 09-Sep-2014 |
| DP-315624 | US | 13/479983 | 24-May-2012 | 8749988 | 10-Jun-2014 |
| DP-315624 | US | 14/620782 | 12-Feb-2015 | 9119288 | 25-Aug-2015 |
| DP-315624 | US | 13/865458 | 18-Apr-2013 | 9013881 | 21-Apr-2015 |
| DP-315624 | US | 14/024826 | 12-Sep-2013 | 9237683 | 12-Jan-2016 |
| DP-315624 | US | 14/030739 | 18-Sep-2013 | 9173332 | 27-Oct-2015 |
| DP-315629 | US | 11/788521 | 20-Apr-2007 | 7422480 | 09-Sep-2008 |
| DP-315642 | US | 11/712720 | 01-Mar-2007 | 7598455 | 06-Oct-2009 |
| DP-315646 | US | 11/827093 | 10-Jul-2007 | 7710236 | 04-May-2010 |
| DP-315647 | US | 11/888611 | 01-Aug-2007 | 7864544 | 04-Jan-2011 |
| DP-315650 | US | 11/724483 | 15-Mar-2007 | 7635212 | 27-Dec-2009 |
| DP-315660 | US | 11/893591 | 16-Aug-2007 | 7588466 | 15-Sep-2009 |
| DP-315811 | US | 11/706535 | 15-Feb-2007 | 7331801 | 19-Feb-2008 |
| DP-315815 | US | 11/801500 | 10-May-2007 | 7701321 | 20-Apr-2010 |
| DP-315818 | US | 11/906724 | 03-Oct-2007 | 7617066 | 10-Nov-2009 |
| DP-315901 | US | 11/824022 | 29-Jun-2007 | 8391780 | 05-Mar-2013 |
| DP-315915 | US | 12/866283 | 05-Aug-2010 | 8011936 | 06-Sep-2011 |
| DP-315937 | US | 11/811900 | 12-Jun-2007 | 7753713 | 13-Jul-2010 |
| DP-315952 | US | 11/796518 | 27-Apr-2007 | 7498896 | 03-Mar-2009 |
| DP-315996 | US | 12/011327 | 25-Jan-2008 | 7876204 | 25-Jan-2011 |
| DP-316007 | US | 11/821248 | 22-Jun-2007 | 7601019 | 13-Oct-2009 |
| DP-316022 | US | 11/823687 | 28-Jun-2007 | 7485012 | 03-Feb-2009 |
| DP-316075 | US | 11/901893 | 19-Sep-2007 | 7957333 | 07-Jun-2011 |
| DP-316076 | US | 11/787590 | 17-Apr-2007 | 7805120 | 28-Sep-2010 |

| | | | | | |
|---|---|---|---|---|---|
| DP-316159 | US | 12/284721 | 24-Sep-2008 | 8055445 | 08-Nov-2011 |
| DP-316164 | US | 11/796807 | 30-Apr-2007 | 7970175 | 28-Jun-2011 |
| DP-316166 | US | 12/082011 | 08-Apr-2008 | 8104173 | 31-Jan-2012 |
| DP-316175 | US | 11/710820 | 26-Feb-2007 | 7365102 | 29-Apr-2008 |
| DP-316201 | US | 11/879853 | 18-Jul-2007 | 8199198 | 12-Jun-2012 |
| DP-316203 | US | 12/008372 | 10-Jan-2008 | 7889234 | 15-Feb-2011 |
| DP-316226 | US | 11/801980 | 11-May-2007 | 7523679 | 28-Apr-2009 |
| DP-316243 | US | 11/890038 | 03-Aug-2007 | 7679378 | 16-Mar-2010 |
| DP-316275 | US | 11/895807 | 27-Aug-2007 | 8045500 | 25-Oct-2011 |
| DP-316279 | US | 12/229240 | 21-Aug-2008 | 8013539 | 06-Sep-2011 |
| DP-316298 | US | 11/881424 | 27-Jul-2007 | 8116711 | 14-Feb-2012 |
| DP-316304 | US | 11/899878 | 07-Sep-2007 | 7658642 | 09-Feb-2010 |
| DP-316332 | US | 11/890037 | 03-Aug-2007 | 7790983 | 07-Sep-2010 |
| DP-316346 | US | 12/079850 | 27-Mar-2008 | 7632118 | 15-Dec-2009 |
| DP-316372 | US | 11/895806 | 27-Aug-2007 | 7869533 | 11-Jan-2011 |
| DP-316426 | US | 12/001820 | 13-Dec-2007 | 7534138 | 19-May-2009 |
| DP-316472 | US | 11/899200 | 05-Sep-2007 | 7636064 | 22-Dec-2009 |
| DP-316472 | US | 12/612128 | 04-Nov-2009 | 7864118 | 04-Jan-2011 |
| DP-316492 | US | 11/998934 | 03-Dec-2007 | 7641511 | 05-Jan-2010 |
| DP-316504 | US | 11/999883 | 07-Dec-2007 | 7692096 | 06-Apr-2010 |
| DP-316505 | US | 11/986324 | 21-Nov-2007 | 7674972 | 09-Mar-2010 |
| DP-316515 | US | 12/287898 | 14-Oct-2008 | 8008589 | 30-Aug-2011 |
| DP-316550 | US | 12/148571 | 21-Apr-2008 | 7963787 | 21-Jun-2011 |
| DP-316568 | US | 12/221456 | 01-Aug-2008 | 8046135 | 25-Oct-2011 |
| DP-316574 | US | 12/001308 | 11-Dec-2007 | 7510407 | 31-Mar-2009 |
| DP-316608 | US | 12/080589 | 04-Apr-2008 | 7901820 | 08-Mar-2011 |
| DP-316634 | US | 12/220942 | 30-Jul-2008 | 8050460 | 01-Nov-2011 |
| DP-316638 | US | 12/072794 | 28-Feb-2008 | 7639171 | 29-Dec-2009 |
| DP-316677 | US | 12/011249 | 25-Jan-2008 | 7932835 | 26-Apr-2011 |
| DP-316719 | US | 12/362712 | 30-Jan-2009 | 7903629 | 08-Mar-2011 |
| DP-316731 | US | 11/983248 | 08-Nov-2007 | 7609530 | 27-Oct-2009 |
| DP-316780 | US | 12/151653 | 08-May-2008 | 7708919 | 04-May-2010 |
| DP-316810 | US | 12/231331 | 29-Aug-2008 | 8055020 | 08-Nov-2011 |
| DP-316856 | US | 12/676175 | 03-Mar-2010 | 8446381 | 21-May-2013 |
| DP-316905 | US | 12/150439 | 28-Apr-2008 | 7876106 | 25-Jan-2011 |
| DP-316951 | US | 12/218711 | 17-Jul-2008 | 8190139 | 29-May-2012 |
| DP-316953 | US | 12/231299 | 29-Aug-2008 | 8116524 | 14-Feb-2012 |
| DP-316955 | US | 12/231550 | 29-Aug-2008 | 8155380 | 10-Apr-2012 |
| DP-316986 | US | 12/082626 | 10-Apr-2008 | 8051877 | 08-Nov-2011 |
| DP-316987 | US | 12/228447 | 13-Aug-2008 | 8047860 | 01-Nov-2011 |
| DP-316998 | US | 12/732323 | 26-Mar-2010 | 8400261 | 19-Mar-2013 |
| DP-317026 | US | 12/080451 | 03-Apr-2008 | 7749031 | 06-Jul-2010 |
| DP-317028 | US | 12/082025 | 08-Apr-2008 | 7868251 | 11-Jan-2011 |
| DP-317064 | US | 12/228446 | 13-Aug-2008 | 8027168 | 27-Sep-2011 |
| DP-317066 | US | 12/287177 | 07-Oct-2008 | 8180527 | 15-May-2012 |
| DP-317079 | US | 12/291481 | 10-Nov-2008 | 8022834 | 20-Sep-2011 |
| DP-317090 | US | 12/080517 | 03-Apr-2008 | 8045337 | 25-Oct-2011 |
| DP-317093 | US | 12/082334 | 10-Apr-2008 | 8053128 | 08-Nov-2011 |
| DP-317186 | US | 12/229297 | 21-Aug-2008 | 8115676 | 14-Feb-2012 |
| DP-317220 | US | 12/389659 | 20-Feb-2009 | 7914278 | 29-Mar-2011 |
| DP-317232 | US | 12/151393 | 06-May-2008 | 7651346 | 26-Jan-2010 |
| DP-317258 | US | 12/284741 | 25-Sep-2008 | 7752925 | 13-Jul-2010 |
| DP-317275 | US | 12/284499 | 23-Sep-2008 | 9276267 | 01-Mar-2016 |
| DP-317331 | US | 12/752187 | 01-Apr-2010 | 8421641 | 16-Apr-2013 |
| DP-317333 | US | 12/432975 | 30-Apr-2009 | 8237455 | 07-Aug-2012 |
| DP-317341 | US | 12/218083 | 11-Jul-2008 | 7896435 | 01-Mar-2011 |

| | | | | | |
|---|---|---|---|---|---|
| DP-317367 | US | 12/221184 | 31-Jul-2008 | 7757997 | 20-Jul-2010 |
| DP-317368 | US | 12/228352 | 12-Aug-2008 | 7658645 | 09-Feb-2010 |
| DP-317376 | US | 12/152302 | 14-May-2008 | 7668690 | 23-Feb-2010 |
| DP-317385 | US | 12/468336 | 19-May-2009 | 8198992 | 12-Jun-2012 |
| DP-317435 | US | 12/423937 | 15-Apr-2009 | 8092061 | 10-Jan-2012 |
| DP-317438 | US | 12/150414 | 28-Apr-2008 | 8107915 | 31-Jan-2012 |
| DP-317470 | US | 12/228329 | 12-Aug-2008 | 7780485 | 24-Aug-2010 |
| DP-317471 | US | 12/287873 | 14-Oct-2008 | 7635286 | 22-Dec-2009 |
| DP-317484 | US | 12/291813 | 13-Nov-2008 | 8052492 | 08-Nov-2011 |
| DP-317489 | US | 12/288145 | 16-Oct-2008 | 7806007 | 05-Oct-2010 |
| DP-317490 | US | 12/334627 | 15-Dec-2008 | 8094001 | 10-Jan-2012 |
| DP-317497 | US | 12/358773 | 23-Jan-2009 | 7727022 | 01-Jun-2010 |
| DP-317499 | US | 12/370319 | 12-Feb-2009 | 8164911 | 24-Apr-2012 |
| DP-317499 | US | 13/344807 | 06-Jan-2012 | 8681507 | 25-Mar-2014 |
| DP-317499 | US | 14/100794 | 09-Dec-2013 | 9042119 | 26-May-2015 |
| DP-317499 | US | 14/627060 | 20-Feb-2015 | 9854683 | 26-Dec-2017 |
| DP-317504 | US | 12/286789 | 02-Oct-2008 | 7722416 | 25-May-2010 |
| DP-317511 | US | 12/157662 | 12-Jun-2008 | 8158909 | 17-Apr-2012 |
| DP-317524 | US | 12/468880 | 20-May-2009 | 8249798 | 21-Aug-2012 |
| DP-317561 | US | 12/229938 | 28-Aug-2008 | 7641499 | 05-Jan-2010 |
| DP-317580 | US | 12/082779 | 14-Apr-2008 | 7896952 | 01-Mar-2011 |
| DP-317612 | US | 12/231724 | 05-Sep-2008 | 7727020 | 01-Jun-2010 |
| DP-317663 | US | 12/433923 | 01-May-2009 | 8091960 | 10-Jan-2012 |
| DP-317666 | US | 12/286776 | 02-Oct-2008 | 7960652 | 14-Jun-2011 |
| DP-317675 | US | 12/220944 | 30-Jul-2008 | 7794274 | 14-Sep-2010 |
| DP-317682 | US | 12/433011 | 30-Apr-2009 | 7880480 | 01-Feb-2011 |
| DP-317683 | US | 12/433993 | 01-May-2009 | 8154394 | 10-Apr-2012 |
| DP-317687 | US | 12/484547 | 15-Jun-2009 | 8011253 | 06-Sep-2011 |
| DP-317687 | US | 13/191527 | 27-Jul-2011 | 8499644 | 06-Aug-2013 |
| DP-317708 | US | 12/220425 | 24-Jul-2008 | 8184856 | 22-May-2012 |
| DP-317764 | US | 12/287774 | 14-Oct-2008 | 8092245 | 10-Jan-2012 |
| DP-317776 | US | 12/287103 | 06-Oct-2008 | 8049174 | 01-Nov-2011 |
| DP-317777 | US | 12/276439 | 24-Nov-2008 | 8213928 | 03-Jul-2012 |
| DP-317792 | US | 12/229939 | 28-Aug-2008 | 7810444 | 12-Oct-2010 |
| DP-317793 | US | 13/455389 | 25-Apr-2012 | 8760886 | 24-Jun-2014 |
| DP-317793 | US | 12/713650 | 26-Feb-2010 | 8264856 | 11-Sep-2012 |
| DP-317793 | US | 14/460559 | 15-Aug-2014 | 9237685 | 12-Jan-2016 |
| DP-317823 | US | 12/288881 | 24-Oct-2008 | 8004212 | 23-Aug-2011 |
| DP-317832 | US | 12/290969 | 05-Nov-2008 | 8004400 | 23-Aug-2011 |
| DP-317999 | US | 13/568201 | 07-Aug-2012 | 8456177 | 04-Jun-2013 |
| DP-318052 | US | 12/433920 | 01-May-2009 | 7855030 | 21-Dec-2010 |
| DP-318069 | US | 12/366146 | 05-Feb-2009 | 7891260 | 22-Feb-2011 |
| DP-318136 | US | 13/071961 | 25-Mar-2011 | 8477513 | 02-Jul-2013 |
| DP-318175 | US | 13/874506 | 01-May-2013 | 9042467 | 26-May-2015 |
| DP-318293 | US | 12/788946 | 27-May-2010 | 8232017 | 31-Jul-2012 |
| DP-318294 | US | 12/538964 | 11-Aug-2009 | 9692079 | 27-Jun-2017 |
| DP-318295 | US | 12/788834 | 27-May-2010 | 9356307 | 31-May-2016 |
| DP-318323 | US | 13/119307 | 16-Mar-2011 | 8604968 | 10-Dec-2013 |
| DP-318323 | US | 14/073489 | 06-Nov-2013 | 9063230 | 23-Jun-2015 |
| DP-318326 | US | 14/000763 | 21-Aug-2013 | 9271430 | 23-Feb-2016 |
| DP-318345 | US | 12/698385 | 02-Feb-2010 | 8164045 | 24-Apr-2012 |
| DP-318361 | US | 12/505088 | 17-Jul-2009 | 7726972 | 01-Jun-2010 |
| DP-318380 | US | 12/477237 | 03-Jun-2009 | 8336351 | 25-Dec-2012 |
| DP-318385 | US | 13/202817 | 23-Aug-2011 | 8660737 | 25-Feb-2014 |
| DP-318415 | US | 12/560967 | 16-Sep-2009 | 8011598 | 06-Sep-2011 |
| DP-318420 | US | 12/757119 | 09-Apr-2010 | 8224623 | 17-Jul-2012 |

| | | | | | |
|---|---|---|---|---|---|
| DP-318476 | US | 12/630066 | 03-Dec-2009 | 8500287 | 06-Aug-2013 |
| DP-318535 | US | 12/635756 | 11-Dec-2009 | 8124037 | 28-Feb-2012 |
| DP-318536 | US | 12/564324 | 22-Sep-2009 | 7833674 | 16-Nov-2010 |
| DP-318574 | US | 12/758218 | 12-Apr-2010 | 8457844 | 04-Jun-2013 |
| DP-318574 | US | 13/761384 | 07-Feb-2013 | 8489283 | 16-Jul-2013 |
| DP-318575 | US | 12/688164 | 15-Jan-2010 | 8377705 | 19-Feb-2013 |
| DP-318582 | US | 12/883319 | 16-Sep-2010 | 8360803 | 29-Jan-2013 |
| DP-318609 | US | 12/412470 | 27-Mar-2009 | 8022346 | 20-Sep-2011 |
| DP-318642 | US | 12/908088 | 20-Oct-2010 | 8500194 | 06-Aug-2013 |
| DP-318672 | US | 12/575675 | 08-Oct-2009 | 8266798 | 18-Sep-2012 |
| DP-318677 | US | 12/636821 | 14-Dec-2009 | 8350684 | 08-Jan-2013 |
| DP-318682 | US | 12/536675 | 06-Aug-2009 | 8363957 | 29-Jan-2013 |
| DP-318684 | US | 12/610659 | 02-Nov-2009 | 7932772 | 26-Apr-2011 |
| DP-318688 | US | 12/582116 | 20-Oct-2009 | 8207796 | 26-Jun-2012 |
| DP-318724 | US | 12/838086 | 16-Jul-2010 | 8564423 | 22-Oct-2013 |
| DP-318762 | US | 12/723741 | 15-Mar-2010 | 7980872 | 19-Jul-2011 |
| DP-318769 | US | 12/708911 | 19-Feb-2010 | 8375575 | 19-Feb-2013 |
| DP-318769 | US | 13/668461 | 05-Nov-2012 | 9456531 | 27-Sep-2016 |
| DP-318808 | US | 12/619958 | 17-Nov-2009 | 7931479 | 26-Apr-2011 |
| DP-318863 | US | 12/887872 | 22-Sep-2010 | 8836538 | 16-Sep-2014 |
| DP-318890 | US | 12/575689 | 08-Oct-2009 | 7905755 | 15-Mar-2011 |
| DP-318899 | US | 13/379760 | 21-Dec-2011 | 8598475 | 03-Dec-2013 |
| DP-318913 | US | 12/642938 | 21-Dec-2009 | 8400323 | 19-Mar-2013 |
| DP-318988 | US | 12/606245 | 27-Oct-2009 | 8438862 | 14-May-2013 |
| DP-319012 | US | 13/640614 | 11-Oct-2012 | 8816995 | 26-Aug-2014 |
| DP-319014 | US | 12/709672 | 22-Feb-2010 | 8259952 | 04-Sep-2012 |
| DP-319015 | US | 13/393865 | 02-Mar-2012 | 8837140 | 16-Sep-2014 |
| DP-319019 | US | 12/764618 | 21-Apr-2010 | 8105113 | 31-Jan-2012 |
| DP-319082 | US | 12/768903 | 28-Apr-2010 | 8219286 | 10-Jul-2012 |
| DP-319101 | US | 12/709722 | 22-Feb-2010 | 8259962 | 04-Sep-2012 |
| DP-319155 | US | 12/841422 | 22-Jul-2010 | 8466438 | 18-Jun-2013 |
| DP-319162 | US | 12/840578 | 21-Jul-2010 | 9112219 | 18-Aug-2015 |
| DP-319164 | US | 12/981881 | 30-Dec-2010 | 8420278 | 16-Apr-2013 |
| DP-319190 | US | 13/640684 | 11-Oct-2012 | 8833945 | 16-Sep-2014 |
| DP-319199 | US | 12/837602 | 16-Jul-2010 | 8129951 | 06-Mar-2012 |
| DP-319207 | US | 12/840526 | 21-Jul-2010 | 8277055 | 02-Oct-2012 |
| DP-319208 | US | 13/714664 | 14-Dec-2012 | 8920993 | 30-Dec-2014 |
| DP-319212 | US | 12/719584 | 08-Mar-2010 | 7955104 | 07-Jun-2011 |
| DP-319213 | US | 12/787452 | 26-May-2010 | 8305773 | 06-Nov-2012 |
| DP-319213 | US | 13/550856 | 17-Jul-2012 | 9125293 | 01-Sep-2015 |
| DP-319219 | US | 12/721010 | 10-Mar-2010 | 8379769 | 19-Feb-2013 |
| DP-319219 | US | 13/705527 | 05-Dec-2012 | 8599971 | 03-Dec-2013 |
| DP-319226 | US | 13/017733 | 31-Jan-2011 | 8646176 | 11-Feb-2014 |
| DP-319230 | US | 13/011956 | 24-Jan-2011 | 8713771 | 06-May-2014 |
| DP-319240 | US | 12/750146 | 30-Mar-2010 | 8043106 | 25-Oct-2011 |
| DP-319241 | US | 12/883838 | 16-Sep-2010 | 8181343 | 22-May-2012 |
| DP-319280 | US | 13/992529 | 07-Jun-2013 | 9229531 | 05-Jan-2016 |
| DP-319294 | US | 13/635451 | 17-Sep-2012 | 8757825 | 24-Jun-2014 |
| DP-319308 | US | 13/635930 | 19-Sep-2012 | 9063560 | 23-Jun-2015 |
| DP-319340 | US | 12/938724 | 03-Nov-2010 | 8641142 | 04-Feb-2014 |
| DP-319364 | US | 13/175003 | 01-Jul-2011 | 8650351 | 11-Feb-2014 |
| DP-319365 | US | 13/874688 | 01-May-2013 | 8573994 | 05-Nov-2013 |
| DP-319384 | US | 13/097249 | 29-Apr-2011 | 8488303 | 16-Jul-2013 |
| DP-319385 | US | 13/115342 | 25-May-2011 | 8267702 | 18-Sep-2012 |
| DP-319424 | US | 12/938757 | 03-Nov-2010 | 8558713 | 15-Oct-2013 |
| DP-319426 | US | 13/816496 | 12-Feb-2013 | 9111669 | 18-Aug-2015 |

| | | | | | |
|---|---|---|---|---|---|
| DP-319431 | US | 13/810467 | 16-Jan-2013 | 9063327 | 23-Jun-2015 |
| DP-319433 | US | 13/813212 | 30-Jan-2013 | 8813579 | 26-Aug-2014 |
| DP-319434 | US | 13/808613 | 07-Jan-2013 | 9322724 | 26-Apr-2016 |
| DP-319443 | US | 13/113286 | 23-May-2011 | 8287306 | 16-Oct-2012 |
| DP-319450 | US | 13/009931 | 20-Jan-2011 | 8539283 | 17-Sep-2013 |
| DP-319453 | US | 12/840576 | 21-Jul-2010 | 8362992 | 29-Jan-2013 |
| DP-319456 | US | 12/980475 | 29-Dec-2010 | 8305678 | 06-Nov-2012 |
| DP-319462 | US | 12/961099 | 06-Dec-2010 | 8333622 | 18-Dec-2012 |
| DP-319467 | US | 12/881242 | 14-Sep-2010 | 8363325 | 29-Jan-2013 |
| DP-319468 | US | 12/958767 | 02-Dec-2010 | 8279510 | 02-Oct-2012 |
| DP-319475 | US | 12/980528 | 29-Dec-2010 | 8480798 | 09-Jul-2013 |
| DP-319482 | US | 13/876487 | 28-Mar-2013 | 9052736 | 09-Jun-2015 |
| DP-319484 | US | 13/315448 | 09-Dec-2011 | 8440358 | 14-May-2013 |
| DP-319493 | US | 13/018841 | 01-Feb-2011 | 8235744 | 07-Aug-2012 |
| DP-319503 | US | 14/123981 | 03-Dec-2013 | 8926107 | 06-Jan-2015 |
| DP-319511 | US | 13/305096 | 28-Nov-2011 | 8832934 | 16-Sep-2014 |
| DP-319518 | US | 13/072146 | 25-Mar-2011 | 8210864 | 03-Jul-2012 |
| DP-319521 | US | 13/209932 | 15-Aug-2011 | 8548407 | 01-Oct-2013 |
| DP-319528 | US | 13/072171 | 25-Mar-2011 | 8277243 | 02-Oct-2012 |
| DP-319529 | US | 29/376111 | 01-Oct-2010 | D669033 | 16-Oct-2012 |
| DP-319551 | US | 13/113301 | 23-May-2011 | 8323046 | 04-Dec-2012 |
| DP-319552 | US | 13/113313 | 23-May-2011 | 8333603 | 18-Dec-2012 |
| DP-319578 | US | 12/913864 | 28-Oct-2010 | 8038455 | 18-Oct-2011 |
| DP-319590 | US | 14/006379 | 20-Sep-2013 | 8833185 | 16-Sep-2014 |
| DP-319641 | US | 13/983333 | 02-Aug-2013 | 9190224 | 17-Nov-2015 |
| DP-319693 | US | 13/267505 | 06-Oct-2011 | 8442425 | 14-May-2013 |
| DP-319700 | US | 13/179716 | 11-Jul-2011 | 8441394 | 14-May-2013 |
| DP-319724 | US | 13/209993 | 15-Aug-2011 | 8387457 | 05-Mar-2013 |
| DP-319740 | US | 14/002777 | 03-Sep-2013 | 9839152 | 05-Dec-2017 |
| DP-319784 | US | 13/106402 | 12-May-2011 | 8408765 | 02-Apr-2013 |
| DP-319829 | US | 14/344630 | 13-Mar-2014 | 9227513 | 05-Jan-2016 |
| DP-319831 | US | 13/118816 | 31-May-2011 | 8559981 | 15-Oct-2013 |
| DP-319837 | US | 13/178165 | 07-Jul-2011 | 8579240 | 12-Nov-2013 |
| DP-319847 | US | 13/106433 | 12-May-2011 | 8398282 | 19-Mar-2013 |
| DP-319852 | US | 14/117075 | 12-Nov-2013 | 9172177 | 27-Oct-2015 |
| DP-319862 | US | 13/296580 | 15-Nov-2011 | 8197982 | 12-Jun-2012 |
| DP-319902 | US | 13/428435 | 23-Mar-2012 | 8827744 | 09-Sep-2014 |
| DP-319907 | US | 14/708526 | 11-May-2015 | 9725003 | 08-Aug-2017 |
| DP-319916 | US | 13/288561 | 03-Nov-2011 | 8485853 | 16-Jul-2013 |
| DP-319917 | US | 13/421932 | 16-Mar-2012 | 8585447 | 19-Nov-2013 |
| DP-319920 | US | 13/301023 | 21-Nov-2011 | 9153834 | 06-Oct-2015 |
| DP-319929 | US | 13/450881 | 19-Apr-2012 | 9379571 | 28-Jun-2016 |
| DP-319929 | US | 15/159312 | 19-May-2016 | 9707853 | 18-Jul-2017 |
| DP-319930 | US | 13/163993 | 20-Jun-2011 | 8379302 | 19-Feb-2013 |
| DP-319949 | US | 13/399068 | 17-Feb-2012 | 8556666 | 15-Oct-2013 |
| DP-319975 | US | 13/282555 | 27-Oct-2011 | 8746889 | 10-Jun-2014 |
| DP-319979 | US | 13/314249 | 08-Dec-2011 | 8477401 | 02-Jul-2013 |
| DP-319983 | US | 13/283988 | 28-Oct-2011 | 8610841 | 17-Dec-2013 |
| DP-319993 | US | 13/336640 | 23-Dec-2011 | 8842043 | 23-Sep-2014 |
| DP-320010 | US | 13/299410 | 18-Nov-2011 | 8680936 | 25-Mar-2014 |
| DP-320014 | US | 13/297980 | 16-Nov-2011 | 8553334 | 08-Oct-2013 |
| DP-320028 | US | 13/396138 | 14-Feb-2012 | 8613470 | 24-Dec-2013 |
| DP-320037 | US | 13/477737 | 22-May-2012 | 8823641 | 02-Sep-2014 |
| DP-320072 | US | 14/358370 | 15-May-2014 | 9280208 | 08-Mar-2016 |
| DP-320102 | US | 14/097406 | 05-Dec-2013 | 9297897 | 29-Mar-2016 |
| DP-320104 | US | 13/744463 | 18-Jan-2013 | 8947217 | 03-Feb-2015 |

| | | | | | |
|---|---|---|---|---|---|
| DP-320105 | US | 13/450936 | 19-Apr-2012 | 8622774 | 07-Jan-2014 |
| DP-320106 | US | 13/466378 | 07-Jun-2012 | 8758035 | 24-Jun-2014 |
| DP-320115 | US | 13/364904 | 02-Feb-2012 | 8973989 | 10-Mar-2015 |
| DP-320123 | US | 13/332725 | 21-Dec-2011 | 8412413 | 02-Apr-2013 |
| DP-320134 | US | 13/332739 | 21-Dec-2011 | 8503088 | 06-Aug-2013 |
| DP-320140 | US | 13/493124 | 11-Jun-2012 | 8784127 | 22-Jul-2014 |
| DP-320152 | US | 13/650182 | 12-Oct-2012 | 9047518 | 02-Jun-2015 |
| DP-320166 | US | 14/424054 | 26-Feb-2015 | 9690320 | 27-Jun-2017 |
| DP-320187 | US | 13/535957 | 28-Jun-2012 | 8489316 | 16-Jul-2013 |
| DP-320189 | US | 13/465066 | 07-May-2012 | 8584315 | 19-Nov-2013 |
| DP-320227 | US | 14/420696 | 10-Feb-2015 | 9662983 | 30-May-2017 |
| DP-320240 | US | 13/477122 | 22-May-2012 | 8659408 | 25-Feb-2014 |
| DP-320244 | US | 13/749967 | 25-Jan-2013 | 9004954 | 14-Apr-2015 |
| DP-320254 | US | 13/585200 | 14-Aug-2012 | 9126502 | 08-Sep-2015 |
| DP-320278 | US | 13/761238 | 07-Feb-2013 | 9118911 | 25-Aug-2015 |
| DP-320289 | US | 13/539553 | 02-Jul-2012 | 8884169 | 11-Nov-2014 |
| DP-320335 | US | 13/710841 | 11-Dec-2012 | 9282655 | 08-Mar-2016 |
| DP-320341 | US | 13/590578 | 21-Aug-2012 | 8925189 | 06-Jan-2015 |
| DP-320354 | US | 13/926463 | 25-Jun-2013 | 9011186 | 21-Apr-2015 |
| DP-320356 | US | 13/692301 | 03-Dec-2012 | 8882521 | 11-Nov-2014 |
| DP-320357 | US | 13/714564 | 14-Dec-2012 | 9005490 | 14-Apr-2015 |
| DP-320380 | US | 13/741838 | 15-Jan-2013 | 9039450 | 26-May-2015 |
| DP-320390 | US | 13/928660 | 27-Jun-2013 | 9291184 | 22-Mar-2016 |
| DP-320392 | US | 29/434360 | 12-Oct-2012 | D680952 | 30-Apr-2013 |
| DP-320393 | US | 29/437832 | 21-Nov-2012 | D686984 | 30-Jul-2013 |
| DP-320394 | US | 29/437833 | 21-Nov-2012 | D686985 | 30-Jul-2013 |
| DP-320402 | US | 13/617883 | 14-Sep-2012 | 9024804 | 05-May-2015 |
| DP-320404 | US | 13/621960 | 18-Sep-2012 | 8712364 | 29-Apr-2014 |
| DP-320443 | US | 13/584979 | 14-Aug-2012 | 9293745 | 22-Mar-2016 |
| DP-320450 | US | 13/713554 | 13-Dec-2012 | 9017897 | 28-Apr-2015 |
| DP-320505 | US | 13/571511 | 10-Aug-2012 | 9061603 | 23-Jun-2015 |
| DP-320588 | US | 13/677369 | 15-Nov-2012 | 9236758 | 12-Jan-2016 |
| DP-320589 | US | 13/788021 | 07-Mar-2013 | 8823551 | 02-Sep-2014 |
| DP-320590 | US | 13/744618 | 18-Jan-2013 | 9304042 | 05-Apr-2016 |
| DP-320651 | US | 13/895413 | 16-May-2013 | 9369001 | 14-Jun-2016 |
| DP-320655 | US | 14/425948 | 04-Mar-2015 | 9715986 | 25-Jul-2017 |
| DP-320672 | US | 14/426796 | 09-Mar-2015 | 9407038 | 02-Aug-2016 |
| DP-320676 | US | 13/688765 | 29-Nov-2012 | 8977090 | 10-Mar-2015 |
| DP-320680 | US | 13/795046 | 12-Mar-2013 | 8991045 | 31-Mar-2015 |
| DP-320686 | US | 13/846983 | 19-Mar-2013 | 9042809 | 26-May-2015 |
| DP-320701 | US | 14/045549 | 03-Oct-2013 | 9071016 | 30-Jun-2015 |
| DP-320726 | US | 14/434853 | 10-Apr-2015 | 9391393 | 12-Jul-2016 |
| DP-320765 | US | 13/961299 | 07-Aug-2013 | 9061591 | 23-Jun-2015 |
| DP-320779 | US | 13/846965 | 19-Mar-2013 | 8992251 | 31-Mar-2015 |
| DP-320804 | US | 13/855431 | 02-Apr-2013 | 9297892 | 29-Mar-2016 |
| DP-320818 | US | 13/742660 | 16-Jan-2013 | 8926344 | 06-Jan-2015 |
| DP-320821 | US | 13/874513 | 01-May-2013 | 8965599 | 24-Feb-2015 |
| DP-320834 | US | 13/936266 | 08-Jul-2013 | 9622355 | 11-Apr-2017 |
| DP-320835 | US | 13/874519 | 01-May-2013 | 8930045 | 06-Jan-2015 |
| DP-320839 | US | 13/942023 | 15-Jul-2013 | 9616829 | 11-Apr-2017 |
| DP-320851 | US | 14/108814 | 17-Dec-2013 | 9099809 | 04-Aug-2015 |
| DP-320893 | US | 13/939531 | 11-Jul-2013 | 9114720 | 25-Aug-2015 |
| DP-320900 | US | 14/470016 | 27-Aug-2014 | 9368910 | 14-Jun-2016 |
| DP-320901 | US | 13/904300 | 29-May-2013 | 9112278 | 18-Aug-2015 |
| DP-320902 | US | 14/036342 | 25-Sep-2013 | 9356300 | 31-May-2016 |
| DP-320905 | US | 14/520696 | 22-Oct-2014 | 9455516 | 27-Sep-2016 |

| | | | | | |
|---|---|---|---|---|---|
| DP-320909 | US | 14/261542 | 25-Apr-2014 | 9153879 | 06-Oct-2015 |
| DP-320927 | US | 14/174157 | 06-Feb-2014 | 9118130 | 25-Aug-2015 |
| DP-320937 | US | 14/013708 | 29-Aug-2013 | 9520601 | 13-Dec-2016 |
| DP-320938 | US | 14/013784 | 29-Aug-2013 | 9698434 | 04-Jul-2017 |
| DP-320939 | US | 14/013818 | 29-Aug-2013 | 9494024 | 15-Nov-2016 |
| DP-320942 | US | 14/013838 | 29-Aug-2013 | 9647291 | 09-May-2017 |
| DP-320944 | US | 14/783928 | 12-Oct-2015 | 9537243 | 03-Jan-2017 |
| DP-320951 | US | 13/871210 | 26-Apr-2013 | 8992258 | 31-Mar-2015 |
| DP-320953 | US | 14/032512 | 20-Sep-2013 | 9812717 | 07-Nov-2017 |
| DP-320954 | US | 13/930057 | 28-Jun-2013 | 9054454 | 09-Jun-2015 |
| DP-320966 | US | 13/905553 | 30-May-2013 | 9117573 | 25-Aug-2015 |
| DP-320972 | US | 13/942850 | 16-Jul-2013 | 9099814 | 04-Aug-2015 |
| DP-320976 | US | 14/249426 | 10-Apr-2014 | 9270055 | 23-Feb-2016 |
| DP-320977 | US | 13/925227 | 24-Jun-2013 | 9190739 | 17-Nov-2015 |
| DP-320979 | US | 14/065873 | 29-Oct-2013 | 9153878 | 06-Oct-2015 |
| DP-320980 | US | 15/282343 | 30-Sep-2016 | 9960502 | 01-May-2018 |
| DP-320983 | US | 14/150136 | 08-Jan-2014 | 9153889 | 06-Oct-2015 |
| DP-320986 | US | 14/017384 | 04-Sep-2013 | 9289848 | 22-Mar-2016 |
| DP-321001 | US | 14/105487 | 13-Dec-2013 | 9666880 | 30-May-2017 |
| DP-321004 | US | 14/330217 | 14-Jul-2014 | 9172183 | 27-Oct-2015 |
| DP-321018 | US | 15/029128 | 13-Apr-2016 | 9653845 | 16-May-2017 |
| DP-321027 | US | 13/961998 | 08-Aug-2013 | 8978201 | 17-Mar-2015 |
| DP-321040 | US | 14/421190 | 12-Feb-2015 | 9917434 | 13-Mar-2018 |
| DP-321047 | US | 15/109866 | 06-Jul-2016 | 9928941 | 27-Mar-2018 |
| DP-321051 | US | 13/955725 | 31-Jul-2013 | 9042717 | 26-May-2015 |
| DP-321062 | US | 14/406868 | 10-Dec-2014 | 9270318 | 23-Feb-2016 |
| DP-321084 | US | 14/048214 | 08-Oct-2013 | 9153899 | 06-Oct-2015 |
| DP-321089 | US | 14/081092 | 15-Nov-2013 | 9379394 | 28-Jun-2016 |
| DP-321090 | US | 14/081068 | 15-Nov-2013 | 9531020 | 27-Dec-2016 |
| DP-321099 | US | 14/071978 | 05-Nov-2013 | 9366281 | 14-Jun-2016 |
| DP-321112 | US | 14/101482 | 10-Dec-2013 | 9142907 | 22-Sep-2015 |
| DP-321113 | US | 14/101488 | 10-Dec-2013 | 9362659 | 07-Jun-2016 |
| DP-321134 | US | 14/036017 | 25-Sep-2013 | 9231124 | 05-Jan-2016 |
| DP-321158 | US | 14/035101 | 24-Sep-2013 | 9231310 | 05-Jan-2016 |
| DP-321160 | US | 14/097553 | 05-Dec-2013 | 9379530 | 28-Jun-2016 |
| DP-321178 | US | 14/533500 | 05-Nov-2014 | 9397485 | 19-Jul-2016 |
| DP-321184 | US | 14/321922 | 02-Jul-2014 | 9331413 | 03-May-2016 |
| DP-321194 | US | 14/249433 | 10-Apr-2014 | 9476283 | 25-Oct-2016 |
| DP-321203 | US | 14/098830 | 06-Dec-2013 | 9640829 | 02-May-2017 |
| DP-321219 | US | 14/269701 | 05-May-2014 | 9321365 | 26-Apr-2016 |
| DP-321256 | US | 14/425157 | 02-Mar-2015 | 9502911 | 22-Nov-2016 |
| DP-321273 | US | 14/179947 | 13-Feb-2014 | 9300069 | 29-Mar-2016 |
| DP-321292 | US | 14/159585 | 21-Jan-2014 | 9328596 | 03-May-2016 |
| DP-321349 | US | 14/197404 | 05-Mar-2014 | 9568600 | 14-Feb-2017 |
| DP-321391 | US | 14/109353 | 17-Dec-2013 | 9228882 | 05-Jan-2016 |
| DP-321437 | US | 14/191563 | 27-Feb-2014 | 9356438 | 31-May-2016 |
| DP-321444 | US | 14/269714 | 05-May-2014 | 9376028 | 28-Jun-2016 |
| DP-321451 | US | 14/191636 | 27-Feb-2014 | 9227526 | 05-Jan-2016 |
| DP-321457 | US | 14/250658 | 11-Apr-2014 | 9281619 | 08-Mar-2016 |
| DP-321495 | US | 14/274857 | 12-May-2014 | 9543747 | 10-Jan-2017 |
| DP-321495 | US | 15/225888 | 02-Aug-2016 | 9887529 | 06-Feb-2018 |
| DP-321498 | US | 14/277894 | 15-May-2014 | 9310468 | 12-Apr-2016 |
| DP-321517 | US | 14/270422 | 06-May-2014 | 9293812 | 22-Mar-2016 |
| DP-321554 | US | 15/316596 | 06-Dec-2016 | 9843132 | 12-Dec-2017 |
| DP-321566 | US | 14/638387 | 04-Mar-2015 | 9577367 | 21-Feb-2017 |
| DP-321568 | US | 14/445569 | 29-Jul-2014 | 9541637 | 10-Oct-2017 |

| | | | | | |
|---|---|---|---|---|---|
| DP-321587 | US | 14/472910 | 29-Aug-2014 | 9621874 | 11-Apr-2017 |
| DP-321630 | US | 14/463688 | 20-Aug-2014 | 9300085 | 29-Mar-2016 |
| DP-321639 | US | 14/852719 | 14-Sep-2015 | 9728896 | 08-Aug-2017 |
| DP-321646 | US | 14/476893 | 04-Sep-2014 | 9362676 | 07-Jun-2016 |
| DP-321651 | US | 14/454754 | 08-Aug-2014 | 9594155 | 14-Mar-2017 |
| DP-321654 | US | 14/570451 | 15-Dec-2014 | 9450226 | 20-Sep-2016 |
| DP-321668 | US | 14/491192 | 19-Sep-2014 | 9784820 | 10-Oct-2017 |
| DP-321674 | US | 14/694310 | 23-Apr-2015 | 9407026 | 02-Aug-2016 |
| DP-321681 | US | 14/852713 | 14-Sep-2015 | 9590348 | 07-Mar-2017 |
| DP-321687 | US | 14/488741 | 17-Sep-2014 | 9506803 | 29-Nov-2016 |
| DP-321689 | US | 14/499990 | 29-Sep-2014 | 9664775 | 30-May-2017 |
| DP-321718 | US | 14/497570 | 26-Sep-2014 | 9395538 | 19-Jul-2016 |
| DP-321737 | US | 14/486176 | 15-Sep-2014 | 9404774 | 02-Aug-2016 |
| DP-321740 | US | 14/548380 | 20-Nov-2014 | 9379486 | 28-Jun-2016 |
| DP-321761 | US | 14/578646 | 22-Dec-2014 | 9504172 | 22-Nov-2016 |
| DP-321792 | US | 14/563053 | 08-Dec-2014 | 9472885 | 18-Oct-2016 |
| DP-321818 | US | 14/514555 | 15-Oct-2014 | 9508344 | 29-Nov-2016 |
| DP-321833 | US | 14/662902 | 19-Mar-2015 | 9559379 | 31-Jan-2017 |
| DP-321873 | US | 14/952025 | 25-Nov-2015 | 9911056 | 06-Mar-2018 |
| DP-321878 | US | 14/953848 | 30-Nov-2015 | 9862318 | 09-Jan-2018 |
| DP-321888 | US | 15/064695 | 09-Mar-2016 | 9711898 | 18-Jul-2017 |
| DP-321929 | US | 14/700682 | 30-Apr-2015 | 9680332 | 13-Jun-2017 |
| DP-321951 | US | 14/592408 | 08-Jan-2015 | 9469176 | 18-Oct-2016 |
| DP-321954 | US | 14/602402 | 22-Jan-2015 | 9691514 | 27-Jun-2017 |
| DP-321956 | US | 11/282974 | 18-Nov-2005 | 7233769 | 19-Jun-2007 |
| DP-321956 | US | 11/467112 | 24-Aug-2006 | 8290173 | 16-Oct-2012 |
| DP-321956 | US | 11/747080 | 10-May-2007 | 8208654 | 26-Jun-2012 |
| DP-321956 | US | 11/933004 | 31-Oct-2007 | 7937118 | 03-May-2011 |
| DP-321956 | US | 10/189091 | 03-Jul-2002 | 7076204 | 11-Jul-2006 |
| DP-321956 | US | 10/691899 | 22-Oct-2003 | 6987947 | 17-Jan-2006 |
| DP-321956 | US | 11/266900 | 04-Nov-2005 | 7359671 | 15-Apr-2008 |
| DP-321956 | US | 11/279548 | 12-Apr-2006 | 7603080 | 13-Oct-2009 |
| DP-321962 | US | 13/069046 | 22-Mar-2011 | 9167057 | 20-Oct-2015 |
| DP-321964 | US | 14/693335 | 22-Apr-2015 | 9592528 | 14-Mar-2017 |
| DP-321991 | US | 15/011970 | 01-Feb-2016 | 9537249 | 03-Jan-2017 |
| DP-321993 | US | 15/202724 | 06-Jul-2016 | 9711902 | 18-Jul-2017 |
| DP-322002 | US | 14/616943 | 09-Feb-2015 | 9568344 | 14-Feb-2017 |
| DP-322006 | US | 14/744128 | 19-Jun-2015 | 9726514 | 08-Aug-2017 |
| DP-322037 | US | 15/268728 | 19-Sep-2016 | 9619420 | 11-Apr-2017 |
| DP-322037 | US | 14/487947 | 16-Sep-2014 | 9460037 | 04-Oct-2016 |
| DP-322037 | US | 15/257096 | 06-Sep-2016 | 9645962 | 09-May-2017 |
| DP-322101 | US | 14/751413 | 26-Jun-2015 | 9475461 | 25-Oct-2016 |
| DP-322118 | US | 14/664420 | 20-Mar-2015 | 9810782 | 07-Nov-2017 |
| DP-322119 | US | 15/083623 | 29-Mar-2016 | 9698501 | 04-Jul-2017 |
| DP-322138 | US | 14/663052 | 19-Mar-2015 | 9910151 | 06-Mar-2018 |
| DP-322139 | US | 14/801422 | 16-Jul-2015 | 9693459 | 27-Jun-2017 |
| DP-322142 | US | 14/735406 | 10-Jun-2015 | 9350116 | 24-May-2016 |
| DP-322143 | US | 14/818429 | 05-Aug-2015 | 9455523 | 27-Sep-2016 |
| DP-322154 | US | 14/687375 | 15-Apr-2015 | 9499202 | 22-Nov-2016 |
| DP-322156 | US | 14/730586 | 04-Jun-2015 | 9618936 | 11-Apr-2017 |
| DP-322157 | US | 14/701796 | 01-May-2015 | 9555807 | 31-Jan-2017 |
| DP-322213 | US | 14/854929 | 15-Sep-2015 | 9470777 | 18-Oct-2016 |
| DP-322214 | US | 14/932261 | 04-Nov-2015 | 9472899 | 18-Oct-2016 |
| DP-322220 | US | 14/932230 | 04-Nov-2015 | 9431771 | 30-Aug-2016 |
| DP-322224 | US | 14/862672 | 23-Sep-2015 | 9768554 | 19-Sep-2017 |
| DP-322228 | US | 14/830786 | 20-Aug-2015 | 9705228 | 11-Jul-2017 |

| | | | | | |
|---|---|---|---|---|---|
| DP-322230 | US | 14/842392 | 01-Sep-2015 | 9781361 | 03-Oct-2017 |
| DP-322233 | US | 15/084856 | 30-Mar-2016 | 10023120 | 17-Jul-2018 |
| DP-322234 | US | 14/851223 | 11-Sep-2015 | 9608357 | 28-Mar-2017 |
| DP-322235 | US | 14/746019 | 22-Jun-2015 | 9493083 | 15-Nov-2016 |
| DP-322248 | US | 14/843215 | 02-Sep-2015 | 9590367 | 07-Mar-2017 |
| DP-322255 | US | 14/873815 | 02-Oct-2015 | 9983301 | 29-May-2018 |
| DP-322264 | US | 15/278169 | 28-Sep-2016 | 9923327 | 20-Mar-2018 |
| DP-322288 | US | 14/748522 | 24-Jun-2015 | 9493118 | 15-Nov-2016 |
| DP-322291 | US | 14/748530 | 24-Jun-2015 | 9727056 | 08-Aug-2017 |
| DP-322292 | US | 14/798937 | 14-Jul-2015 | 9588517 | 07-Mar-2017 |
| DP-322294 | US | 14/838826 | 28-Aug-2015 | 9604639 | 28-Mar-2017 |
| DP-322295 | US | 14/815343 | 31-Jul-2015 | 9594378 | 14-Mar-2017 |
| DP-322303 | US | 14/748551 | 24-Jun-2015 | 9637120 | 02-May-2017 |
| DP-322306 | US | 14/974780 | 18-Dec-2015 | 9750151 | 29-Aug-2017 |
| DP-322338 | US | 14/972768 | 17-Dec-2015 | 9537227 | 03-Jan-2017 |
| DP-322345 | US | 15/208841 | 13-Jul-2016 | 9787031 | 10-Oct-2017 |
| DP-322349 | US | 14/972738 | 17-Dec-2015 | 10082168 | 25-Sep-2018 |
| DP-322355 | US | 29/535850 | 11-Aug-2015 | D773964 | 13-Dec-2016 |
| DP-322356 | US | 29/535855 | 11-Aug-2015 | D802518 | 14-Nov-2017 |
| DP-322372 | US | 14/874760 | 05-Oct-2015 | 9914475 | 13-Mar-2018 |
| DP-322379 | US | 15/335948 | 27-Oct-2016 | 9762003 | 12-Sep-2017 |
| DP-322431 | US | 14/976420 | 21-Dec-2015 | 9975437 | 22-May-2018 |
| DP-322433 | US | 15/386438 | 21-Dec-2016 | 10032545 | 24-Jul-2018 |
| DP-322435 | US | 14/880376 | 12-Oct-2015 | 9541639 | 10-Jan-2017 |
| DP-322437 | US | 15/189576 | 22-Jun-2016 | 9627785 | 18-Apr-2017 |
| DP-322446 | US | 14/955139 | 01-Dec-2015 | 9783130 | 10-Oct-2017 |
| DP-322448 | US | 15/084880 | 30-Mar-2016 | 9798054 | 24-Oct-2017 |
| DP-322455 | US | 14/967819 | 14-Dec-2015 | 9863866 | 09-Jan-2018 |
| DP-322464 | US | 15/368741 | 05-Dec-2016 | 10031624 | 24-Jul-2018 |
| DP-322502 | US | 11/818777 | 15-Jun-2007 | 7438610 | 21-Oct-2008 |
| DP-322530 | US | 15/175494 | 07-Jun-2016 | 9836977 | 05-Dec-2017 |
| DP-322537 | US | 15/011957 | 01-Feb-2016 | 9762001 | 12-Sep-2017 |
| DP-322538 | US | 15/375261 | 12-Dec-2016 | 10021469 | 10-Jul-2018 |
| DP-322543 | US | 14/962092 | 08-Dec-2015 | 9952319 | 24-Apr-2018 |
| DP-322561 | US | 15/007283 | 27-Jan-2016 | 9764741 | 19-Sep-2017 |
| DP-322564 | US | 15/086815 | 31-Mar-2016 | 10037696 | 31-Jul-2018 |
| DP-322565 | US | 15/146504 | 04-May-2016 | 9864374 | 09-Jan-2018 |
| DP-322570 | US | 15/159371 | 19-May-2016 | 10017134 | 10-Jul-2018 |
| DP-322577 | US | 15/204036 | 07-Jul-2016 | 9953476 | 24-Apr-2018 |
| DP-322580 | US | 15/076951 | 22-Mar-2016 | 9898008 | 20-Feb-2018 |
| DP-322583 | US | 15/083538 | 29-Mar-2016 | 9671785 | 06-Jun-2017 |
| DP-322588 | US | 15/154192 | 13-May-2016 | 9910440 | 06-Mar-2018 |
| DP-322591 | US | 15/160655 | 20-May-2016 | 9989966 | 05-Jun-2018 |
| DP-322597 | US | 15/336942 | 28-Oct-2016 | 10025311 | 17-Jul-2018 |
| DP-322617 | US | 15/196326 | 29-Jun-2016 | 9787002 | 10-Oct-2017 |
| DP-322638 | US | 15/237746 | 16-Aug-2016 | 9840232 | 12-Dec-2017 |
| DP-322642 | US | 14/977874 | 22-Dec-2015 | 9841813 | 12-Dec-2017 |
| DP-322664 | US | 15/177763 | 09-Jun-2016 | 9653846 | 16-May-2017 |
| DP-322685 | US | 15/181915 | 14-Jun-2016 | 9840253 | 12-Dec-2017 |
| DP-322687 | US | 15/177985 | 09-Jun-2016 | 9842500 | 12-Dec-2017 |
| DP-322695 | US | 15/159278 | 19-May-2016 | 9634435 | 25-Apr-2017 |
| DP-322730 | US | 15/182748 | 15-Jun-2016 | 9634445 | 25-Apr-2017 |
| DP-322750 | US | 15/154076 | 13-May-2016 | 10019014 | 10-Jul-2018 |
| DP-322780 | US | 15/469894 | 27-Mar-2017 | 9915003 | 13-Mar-2018 |
| DP-322807 | US | 15/177910 | 09-Jun-2016 | 9667000 | 30-May-2017 |
| DP-322808 | US | 15/159346 | 19-May-2016 | 9758114 | 12-Sep-2017 |

| | | | | | |
|---|---|---|---|---|---|
| DP-322814 | US | 15/095515 | 11-Apr-2016 | 9653859 | 16-May-2017 |
| DP-322841 | US | 15/208855 | 13-Jul-2016 | 9755362 | 05-Sep-2017 |
| DP-322865 | US | 15/218128 | 25-Jul-2016 | 9960550 | 01-May-2018 |
| DP-322867 | US | 15/603950 | 24-May-2017 | 10090622 | 02-Oct-2018 |
| DP-322898 | US | 15/227642 | 03-Aug-2016 | 9692153 | 27-Jun-2017 |
| DP-322919 | US | 15/413589 | 24-Jan-2017 | 9899128 | 20-Feb-2018 |
| DP-322926 | US | 15/296321 | 18-Oct-2016 | 10090614 | 02-Oct-2018 |
| DP-322934 | US | 15/499491 | 27-Apr-2017 | 9929508 | 27-Mar-2018 |
| DP-322945 | US | 15/233310 | 10-Aug-2016 | 9705225 | 11-Jul-2017 |
| DP-322957 | US | 15/229997 | 05-Aug-2016 | 9870001 | 16-Jan-2018 |
| DP-322989 | US | 15/264121 | 13-Sep-2016 | 9944318 | 17-Apr-2018 |
| DP-323073 | US | 15/268695 | 19-Sep-2016 | 9927810 | 27-Mar-2018 |
| DP-323120 | US | 15/369006 | 05-Dec-2016 | 9853396 | 26-Dec-2017 |
| DP-323127 | US | 15/280522 | 29-Sep-2016 | 10090608 | 02-Oct-2018 |
| DP-323130 | US | 15/336923 | 28-Oct-2016 | 10008786 | 26-Jun-2018 |
| DP-323143 | US | 15/427725 | 08-Feb-2017 | 9780487 | 03-Oct-2017 |
| DP-323143 | US | 15/687627 | 28-Aug-2017 | 9912101 | 06-Mar-2018 |
| DP-323193 | US | 15/382990 | 19-Dec-2016 | 9893479 | 13-Feb-2018 |
| DP-323207 | US | 15/292754 | 13-Oct-2016 | 10014583 | 03-Jul-2018 |
| DP-323239 | US | 15/339175 | 31-Oct-2016 | 10026321 | 17-Jul-2018 |
| DP-323247 | US | 15/375464 | 12-Dec-2016 | 9928939 | 27-Mar-2018 |
| DP-323248 | US | 15/256784 | 06-Sep-2016 | 10089875 | 02-Oct-2018 |
| DP-323273 | US | 15/371635 | 07-Dec-2016 | 10078334 | 18-Sep-2018 |
| DP-323275 | US | 15/262467 | 12-Sep-2016 | 10031231 | 24-Jul-2018 |
| DP-323290 | US | 15/414693 | 25-Jan-2017 | 9865968 | 09-Jan-2018 |
| DP-323291 | US | 15/422552 | 02-Feb-2017 | 9793639 | 17-Oct-2017 |
| DP-323292 | US | 15/414701 | 25-Jan-2017 | 9899758 | 20-Feb-2018 |
| DP-323312 | US | 15/499463 | 27-Apr-2017 | 10021797 | 10-Jul-2018 |
| DP-323546 | US | 15/490249 | 18-Apr-2017 | 9901018 | 20-Feb-2018 |
| DP-323562 | US | 15/467659 | 23-Mar-2017 | 9978707 | 22-May-2018 |
| DP-323588 | US | 15/432001 | 14-Feb-2017 | 9917381 | 13-Mar-2018 |
| DP-323606 | US | 15/465296 | 21-Mar-2017 | 10037472 | 31-Jul-2018 |
| DP-323722 | US | 15/584779 | 02-May-2017 | 10086809 | 02-Oct-2018 |
| DP-323724 | US | 15/436894 | 20-Feb-2017 | 9906003 | 27-Feb-2018 |
| DP-323752 | US | 15/604812 | 25-May-2017 | 9991620 | 05-Jun-2018 |
| DP-323753 | US | 15/612059 | 02-Jun-2017 | 9917402 | 13-Mar-2018 |
| DP-323783 | US | 15/647666 | 12-Jul-2017 | 10020599 | 10-Jul-2018 |
| DP-323800 | US | 15/467611 | 23-Mar-2017 | 10025316 | 17-Jul-2018 |
| DP-323802 | US | 15/626701 | 19-Jun-2017 | 9954347 | 24-Apr-2018 |
| DP-323872 | US | 15/653609 | 19-Jul-2017 | 10028391 | 17-Jul-2018 |
| DP-323877 | US | 15/619985 | 12-Jun-2017 | 9929509 | 27-Mar-2018 |
| DP-324167 | US | 15/687590 | 28-Aug-2017 | 9979167 | 22-May-2018 |
| DP-324204 | US | 15/817366 | 20-Nov-2017 | 10079446 | 18-Sep-2018 |
| DP-324282 | US | 15/728079 | 09-Oct-2017 | 10017659 | 10-Jul-2018 |
| H-198409 | US | 09/238538 | 27-Jan-1999 | 6168445 | 02-Jan-2001 |
| H-199017 | US | 09/237313 | 26-Jan-1999 | 6430120 | 06-Aug-2002 |
| H-200116 | US | 09/178236 | 23-Oct-1998 | 6099154 | 08-Aug-2000 |
| H-201370 | US | 09/257841 | 25-Feb-1999 | 6087976 | 11-Jul-2000 |
| H-201538 | US | 09/237312 | 26-Jan-1999 | 6018131 | 25-Jan-2000 |
| H-201627 | US | 09/237309 | 26-Jan-1999 | 6323487 | 27-Nov-2001 |
| H-201832 | US | 09/381314 | 16-Sep-1999 | 6236004 | 22-May-2001 |
| H-201876 | US | 09/187701 | 06-Nov-1998 | 6161822 | 19-Dec-2000 |
| H-202237 | US | 09/329642 | 10-Jun-1999 | 6094160 | 25-Jul-2000 |
| H-203138 | US | 09/154290 | 16-Sep-1998 | 6006881 | 28-Dec-1999 |
| H-203561 | US | 09/802478 | 09-Mar-2001 | 6481701 | 19-Nov-2002 |
| H-203642 | US | 09/190729 | 09-Nov-1998 | 6157881 | 05-Dec-2000 |

| | | | | | |
|---|---|---|---|---|---|
| H-203644 | US | 09/188988 | 09-Nov-1998 | 5969599 | 19-Oct-1999 |
| H-203645 | US | 09/188487 | 09-Nov-1998 | 5964817 | 12-Oct-1999 |
| H-203651 | US | 09/280945 | 29-Mar-1999 | 6222442 | 24-Apr-2001 |
| H-203655 | US | 09/192523 | 16-Nov-1998 | 6219606 | 17-Apr-2001 |
| H-203820 | US | 09/365084 | 30-Jul-1999 | 6186486 | 13-Feb-2001 |
| H-203827 | US | 09/197878 | 23-Nov-1998 | 6430489 | 06-Aug-2002 |
| H-203927 | US | 09/404514 | 23-Sep-1999 | 6166454 | 26-Dec-2000 |
| H-203932 | US | 09/349214 | 06-Jul-1999 | 6898498 | 24-May-2005 |
| H-204086 | US | 09/438867 | 12-Nov-1999 | 6139351 | 31-Oct-2000 |
| H-204209 | US | 09/404482 | 23-Sep-1999 | 6270115 | 07-Aug-2001 |
| H-204286 | US | 09/286326 | 05-Apr-1999 | 6356854 | 12-Mar-2002 |
| H-204313 | US | 09/634071 | 08-Aug-2000 | 6414265 | 02-Jul-2002 |
| H-204534 | US | 09/241171 | 01-Feb-1999 | 6230494 | 15-May-2001 |
| H-204664 | US | 09/707605 | 08-Nov-2000 | 6392166 | 21-May-2002 |
| H-204666 | US | 09/309848 | 11-May-1999 | 6151540 | 21-Nov-2000 |
| H-204684 | US | 09/252415 | 18-Feb-1999 | 6420797 | 16-Jul-2002 |
| H-204709 | US | 09/448752 | 24-Nov-1999 | 6220876 | 24-Apr-2001 |
| H-204873 | US | 09/431345 | 29-Oct-1999 | 6402321 | 11-Jun-2002 |
| H-204996 | US | 09/266378 | 11-Mar-1999 | 6043937 | 28-Mar-2000 |
| H-205202 | US | 09/307856 | 10-May-1999 | 6236308 | 22-May-2001 |