US 20040019732A1

(19) United States

(12) Patent Application Publication

(10) Pub. No.: US 2004/0019732 A1

(43) Pub. Date: Jan. 29, 2004

Overtoom et al.

(54) DUAL-ROLE COMPATIBLE USB HUB DEVICE AND METHOD

(76) Inventors: **Eric J. Overtoom**, Grayslake, IL (US); **Mark R. Braun**, Arlington Heights, IL (US); **Mark Carlson**, Round Lake, IL (US)

Correspondence Address:
MARSHALL, GERSTEIN & BORUN (MOTOROLA)
233 SOUTH WACKER DRIVE
SUITE 6300
CHICAGO, IL 60606-6402 (US)

(21) Appl. No.: 10/206,286

(22) Filed: Jul. 26, 2002

Publication Classification

(51) Int. Cl.[7] G06F 13/14

(52) U.S. Cl. 710/313

(57) ABSTRACT

A Universal Serial Bus hub apparatus and method is disclosed that is compatible with the On-the-Go (OTG) supplement to the USB 2.0 specification so as to enable dual-role devices (OTG devices) to be connected via a hub. The hub includes a number of ports that are configured to connect the hub to one or more external devices, which may include OTG devices. A controller within the hub controls operations therein. The hub also includes a port switching device controlled by the controller for selectively allowing one of the number of ports to act as a host port and the other remaining ports to act as device ports.

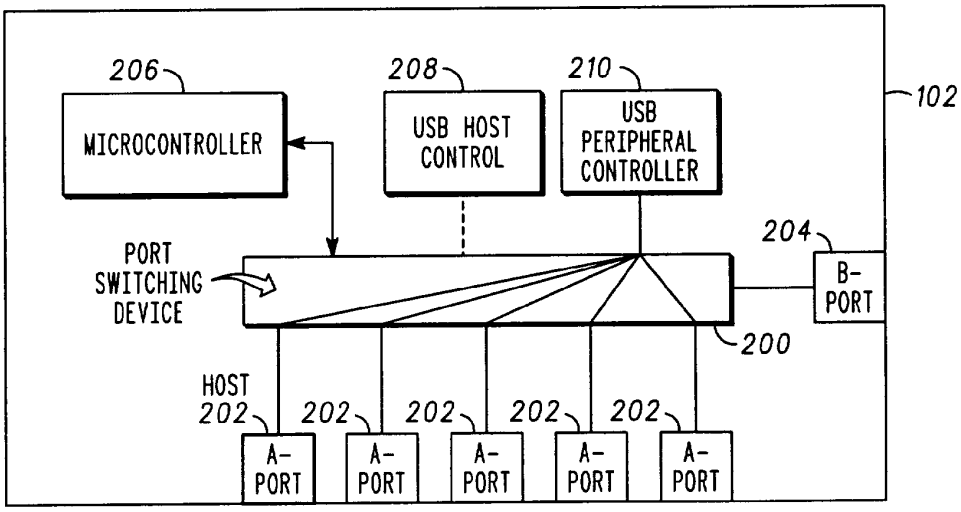

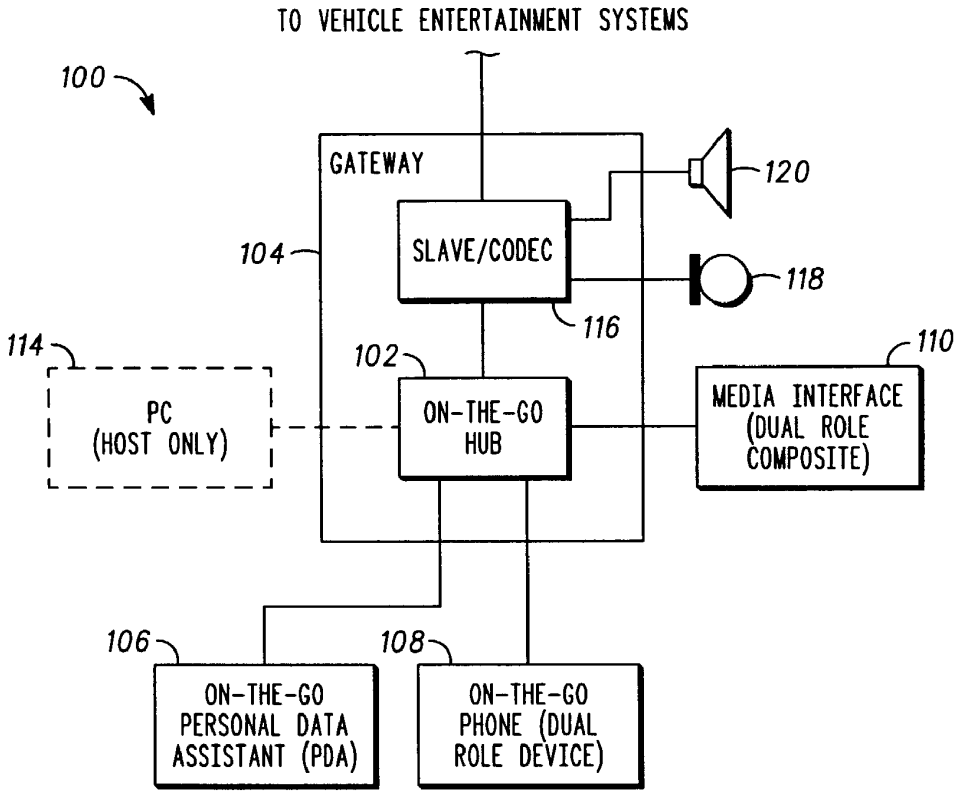
TO VEHICLE ENTERTAINMENT SYSTEMS
100
GATEWAY
104
SLAVE/CODEC
116
120
118
114
PC
(HOST ONLY)
102
ON-THE-GO
HUB
110
MEDIA INTERFACE
(DUAL ROLE
COMPOSITE)
106
ON-THE-GO
PERSONAL DATA
ASSISTANT (PDA)
108
ON-THE-GO
PHONE (DUAL
ROLE DEVICE)

FIG. 1

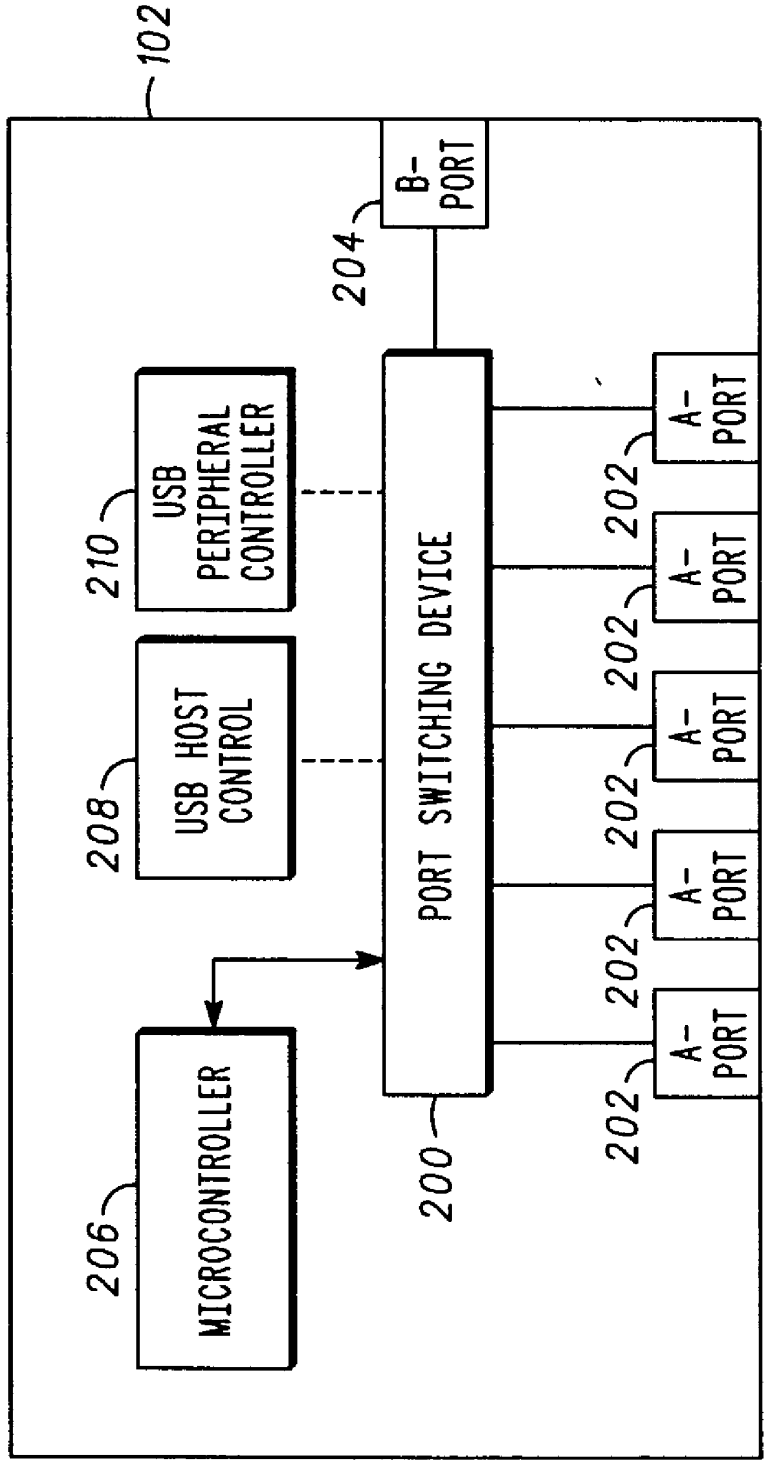
102
B-PORT
204
USB PERIPHERAL CONTROLLER
210
USB HOST CONTROL
208
MICROCONTROLLER
206
PORT SWITCHING DEVICE
200
A-PORT
202
A-PORT
202
A-PORT
202
A-PORT
202
A-PORT
202

FIG. 2

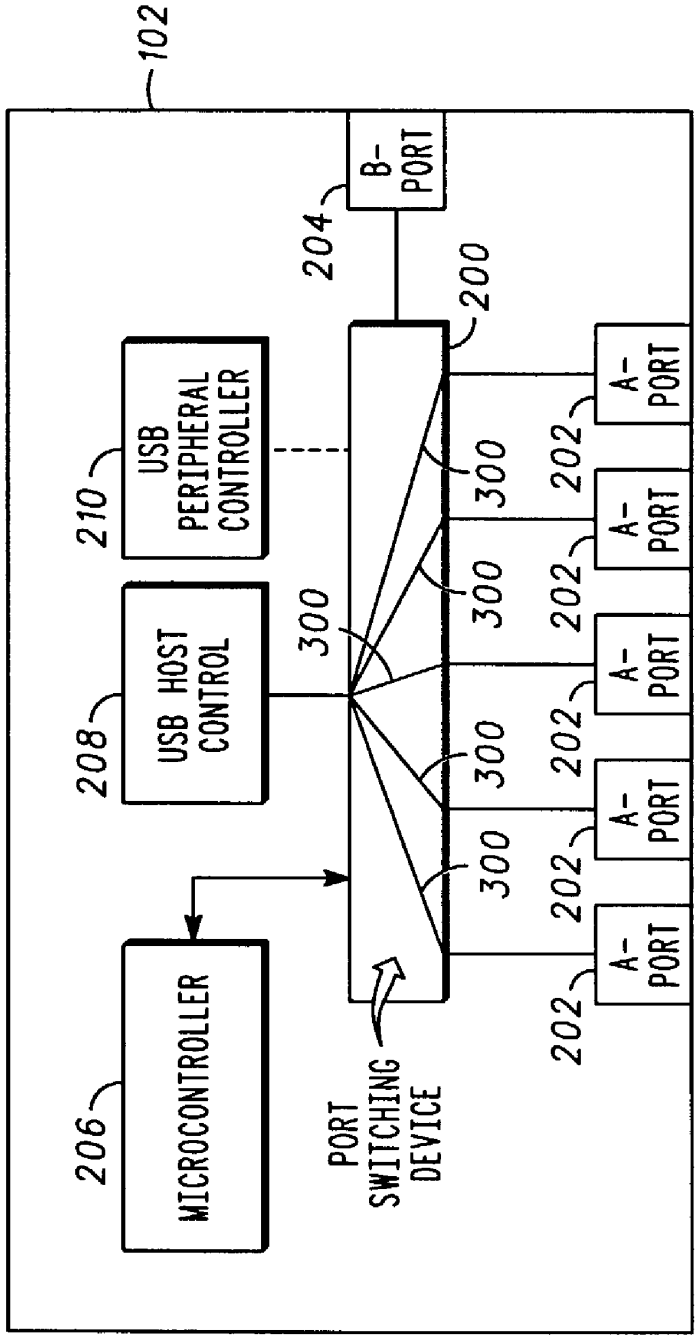
102
B-PORT
204
200
USB PERIPHERAL CONTROLLER
210
USB HOST CONTROL
208
300
MICROCONTROLLER
206
PORT SWITCHING DEVICE
A-PORT
202

FIG. 3

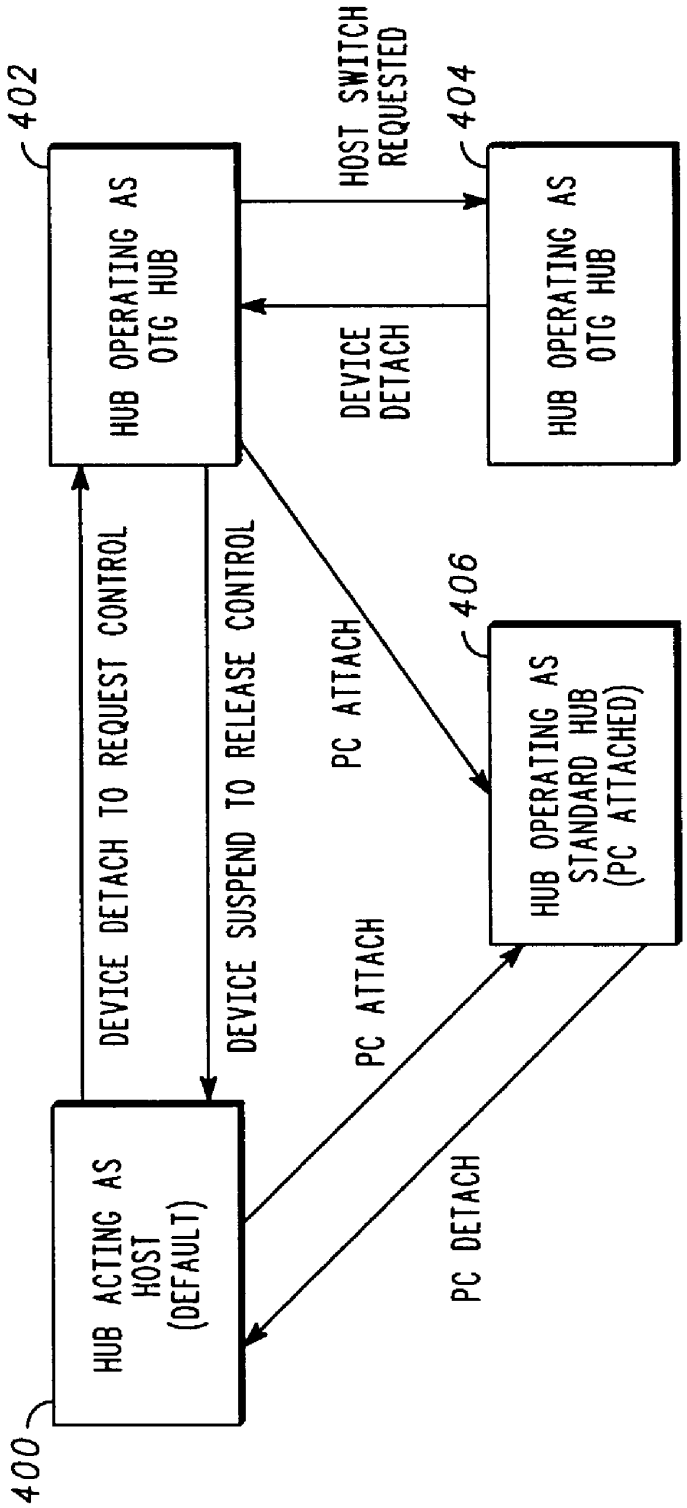
402
HUB OPERATING AS OTG HUB
HOST SWITCH REQUESTED
404
HUB OPERATING AS OTG HUB
DEVICE DETACH
DEVICE DETACH TO REQUEST CONTROL
DEVICE SUSPEND TO RELEASE CONTROL
PC ATTACH
406
HUB OPERATING AS STANDARD HUB (PC ATTACHED)
PC ATTACH
PC DETACH
HUB ACTING AS HOST (DEFAULT)
400

FIG. 4

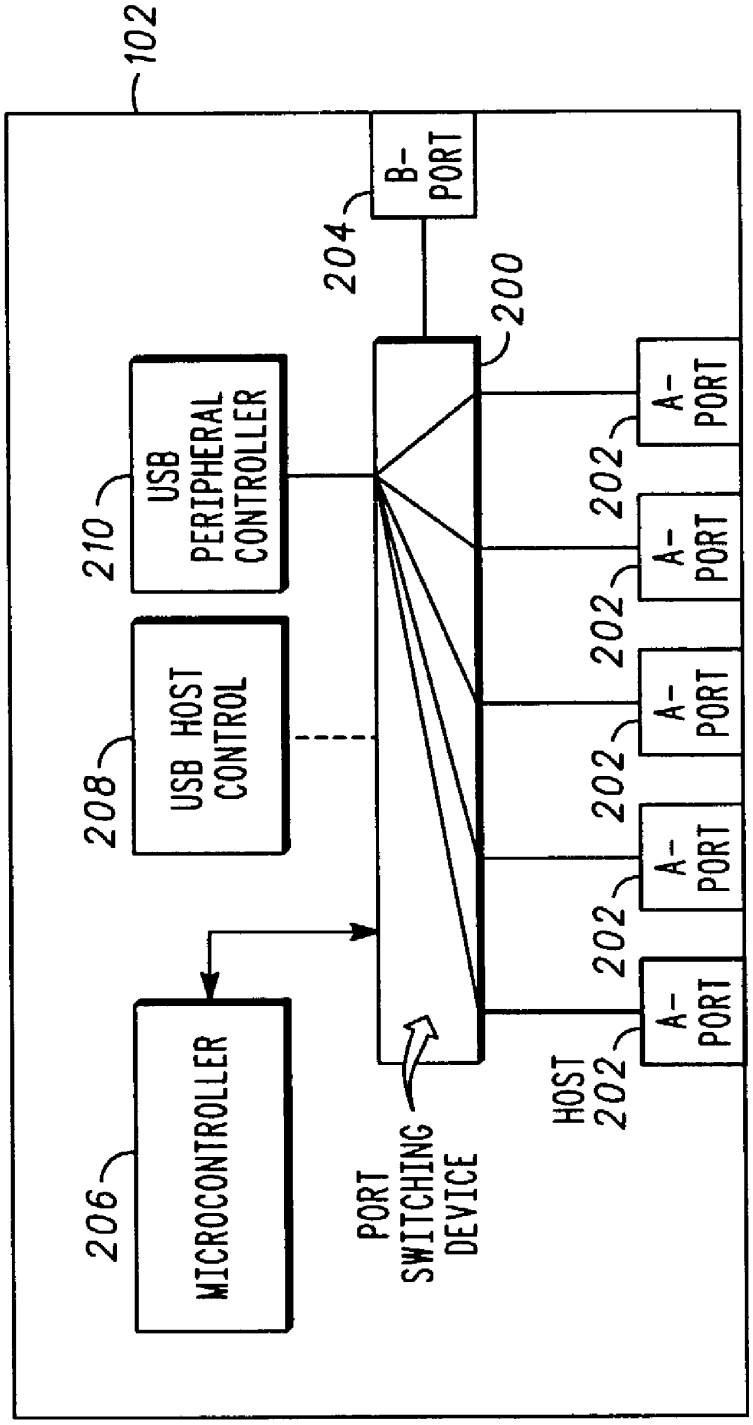
102
B-PORT
204
200
USB PERIPHERAL CONTROLLER
210
USB HOST CONTROL
208
MICROCONTROLLER
206
PORT SWITCHING DEVICE
A-PORT
202
HOST 202

FIG. 5

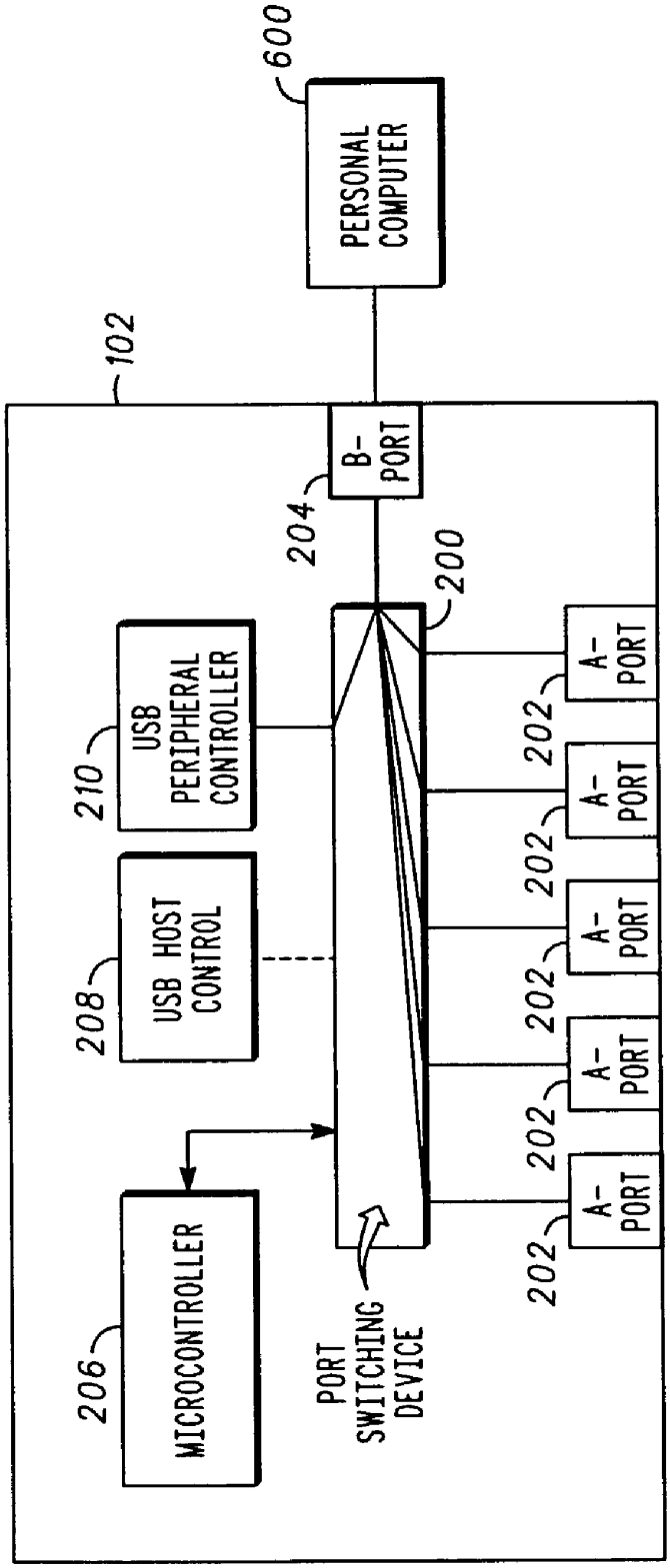
600
PERSONAL COMPUTER
102
B-PORT
204
200
USB PERIPHERAL CONTROLLER
210
USB HOST CONTROL
208
MICROCONTROLLER
206
PORT SWITCHING DEVICE
A-PORT
202
A-PORT
202
A-PORT
202
A-PORT
202
A-PORT
202

FIG. 6

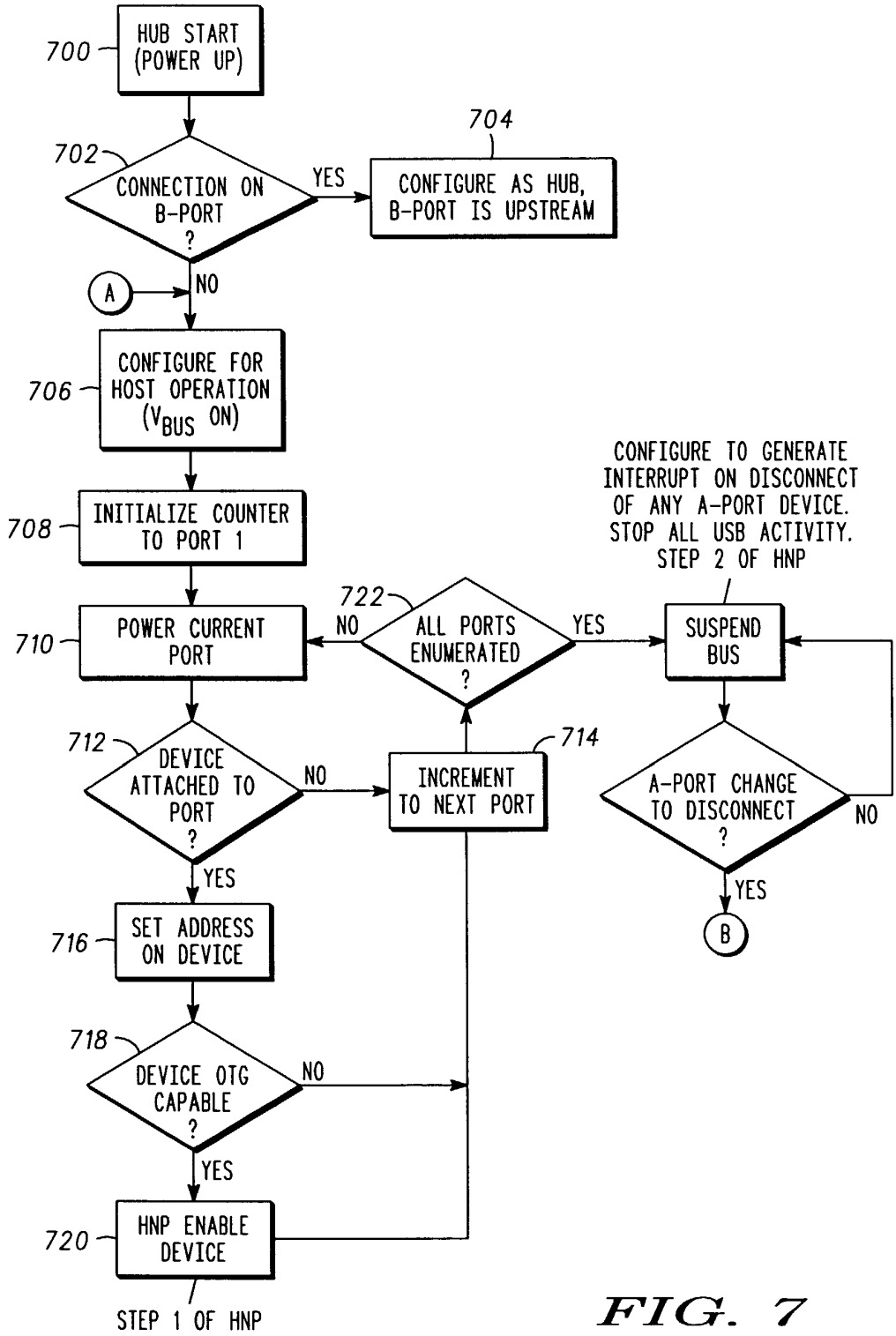
700
HUB START (POWER UP)
702
CONNECTION ON B-PORT ?
YES
704
CONFIGURE AS HUB, B-PORT IS UPSTREAM
A
NO
706
CONFIGURE FOR HOST OPERATION (V_{BUS} ON)
708
INITIALIZE COUNTER TO PORT 1
710
POWER CURRENT PORT
722
ALL PORTS ENUMERATED ?
NO
YES
CONFIGURE TO GENERATE INTERRUPT ON DISCONNECT OF ANY A-PORT DEVICE. STOP ALL USB ACTIVITY. STEP 2 OF HNP
SUSPEND BUS
712
DEVICE ATTACHED TO PORT ?
NO
714
INCREMENT TO NEXT PORT
A-PORT CHANGE TO DISCONNECT ?
NO
YES
B
YES
716
SET ADDRESS ON DEVICE
718
DEVICE OTG CAPABLE ?
NO
YES
720
HNP ENABLE DEVICE
STEP 1 OF HNP

FIG. 7

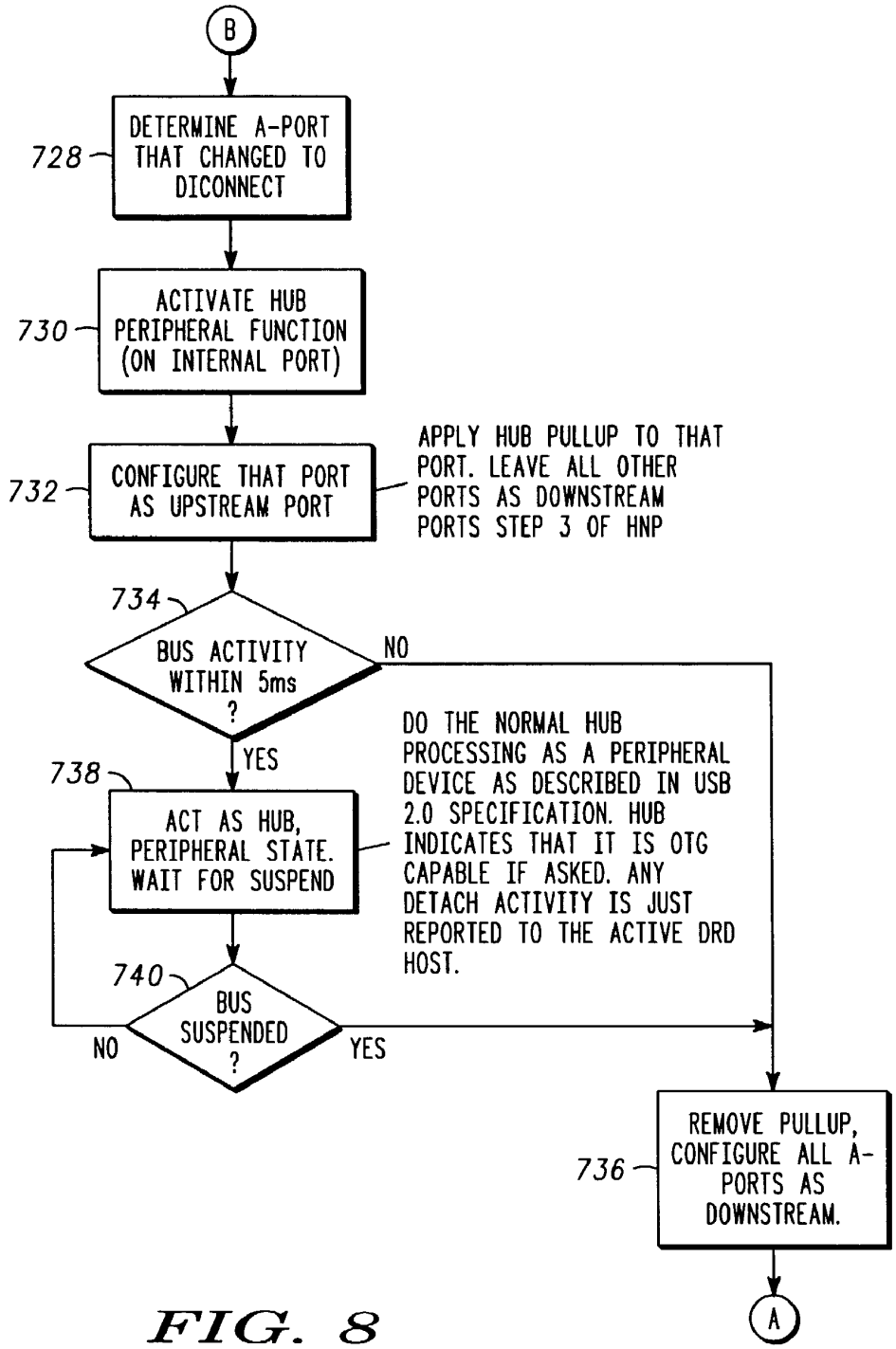
B
728
DETERMINE A-PORT THAT CHANGED TO DICONNECT
730
ACTIVATE HUB PERIPHERAL FUNCTION (ON INTERNAL PORT)
732
CONFIGURE THAT PORT AS UPSTREAM PORT
APPLY HUB PULLUP TO THAT PORT. LEAVE ALL OTHER PORTS AS DOWNSTREAM PORTS STEP 3 OF HNP
734
BUS ACTIVITY WITHIN 5ms ?
NO
YES
738
ACT AS HUB, PERIPHERAL STATE. WAIT FOR SUSPEND
DO THE NORMAL HUB PROCESSING AS A PERIPHERAL DEVICE AS DESCRIBED IN USB 2.0 SPECIFICATION. HUB INDICATES THAT IT IS OTG CAPABLE IF ASKED. ANY DETACH ACTIVITY IS JUST REPORTED TO THE ACTIVE DRD HOST.
740
BUS SUSPENDED ?
NO
YES
736
REMOVE PULLUP, CONFIGURE ALL A-PORTS AS DOWNSTREAM.
A

FIG. 8

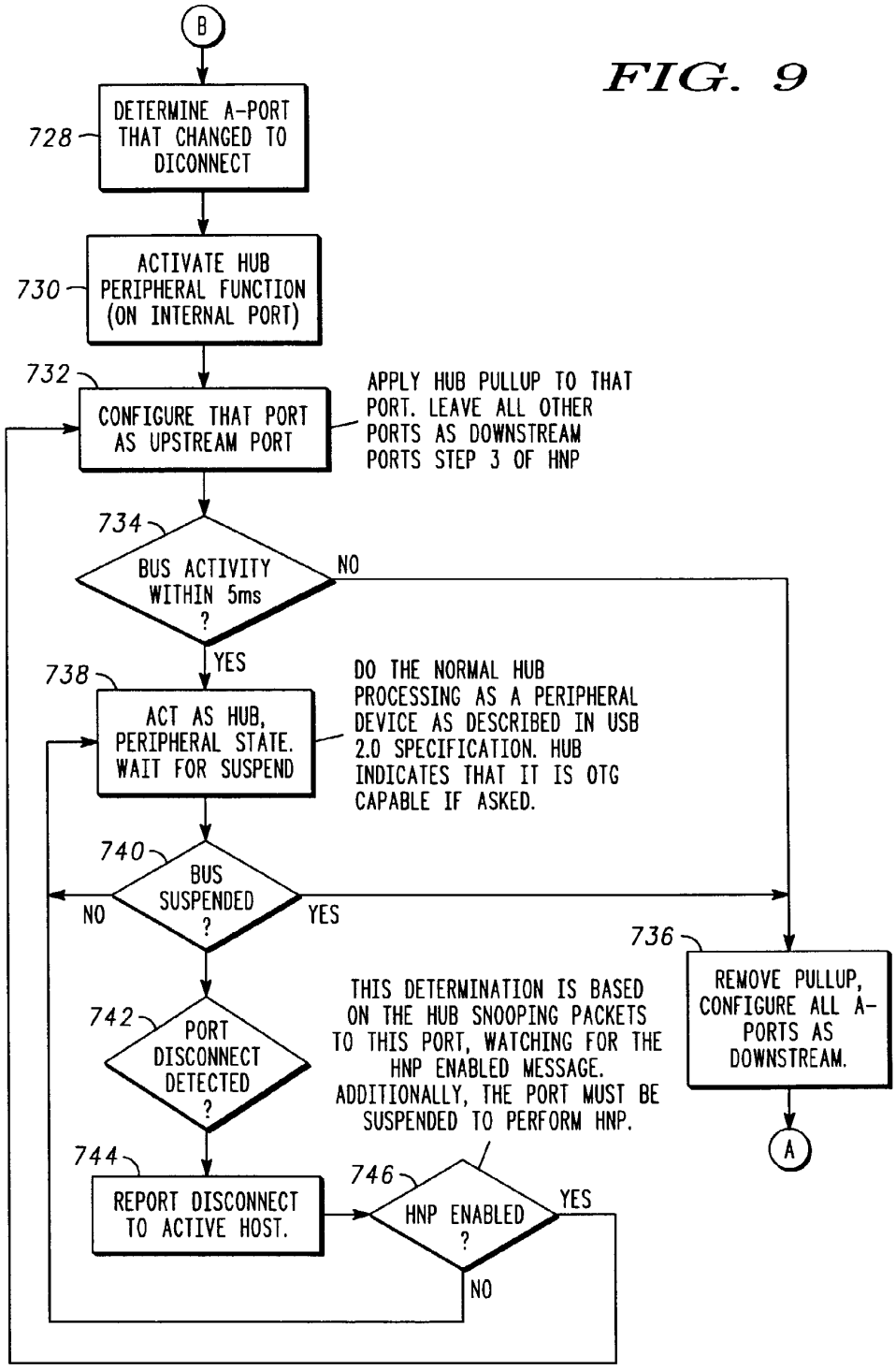
B
FIG. 9
728
DETERMINE A-PORT THAT CHANGED TO DICONNECT
730
ACTIVATE HUB PERIPHERAL FUNCTION (ON INTERNAL PORT)
732
CONFIGURE THAT PORT AS UPSTREAM PORT
APPLY HUB PULLUP TO THAT PORT. LEAVE ALL OTHER PORTS AS DOWNSTREAM PORTS STEP 3 OF HNP
734
BUS ACTIVITY WITHIN 5ms ?
NO
YES
738
ACT AS HUB, PERIPHERAL STATE. WAIT FOR SUSPEND
DO THE NORMAL HUB PROCESSING AS A PERIPHERAL DEVICE AS DESCRIBED IN USB 2.0 SPECIFICATION. HUB INDICATES THAT IT IS OTG CAPABLE IF ASKED.
740
BUS SUSPENDED ?
NO
YES
736
REMOVE PULLUP, CONFIGURE ALL A-PORTS AS DOWNSTREAM.
A
742
PORT DISCONNECT DETECTED ?
THIS DETERMINATION IS BASED ON THE HUB SNOOPING PACKETS TO THIS PORT, WATCHING FOR THE HNP ENABLED MESSAGE. ADDITIONALLY, THE PORT MUST BE SUSPENDED TO PERFORM HNP.
744
REPORT DISCONNECT TO ACTIVE HOST.
746
HNP ENABLED ?
YES
NO

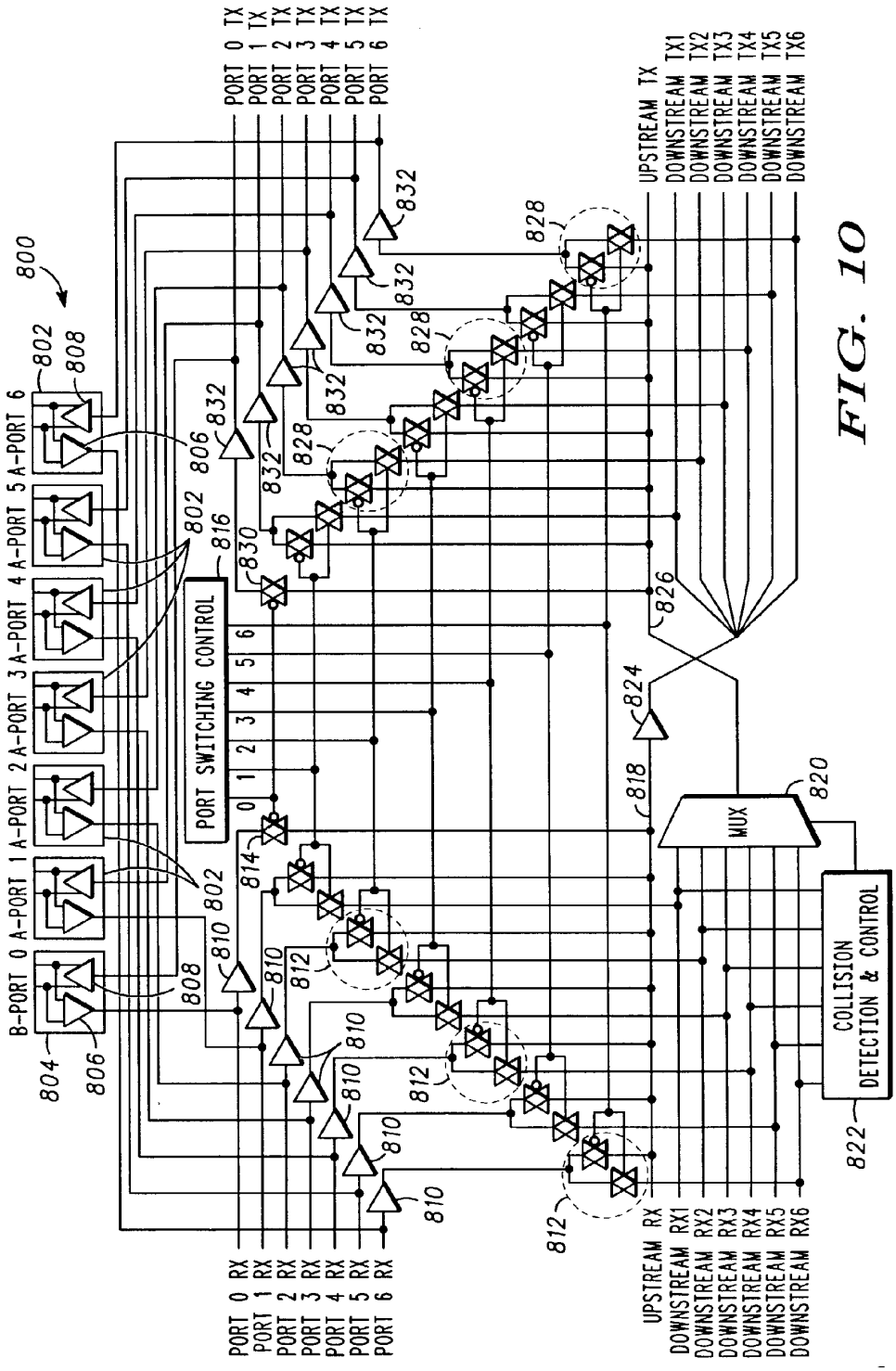
800
B-PORT 0
A-PORT 1
A-PORT 2
A-PORT 3
A-PORT 4
A-PORT 5
A-PORT 6
PORT SWITCHING CONTROL
0 1 2 3 4 5 6
PORT 0 TX
PORT 1 TX
PORT 2 TX
PORT 3 TX
PORT 4 TX
PORT 5 TX
PORT 6 TX
PORT 0 RX
PORT 1 RX
PORT 2 RX
PORT 3 RX
PORT 4 RX
PORT 5 RX
PORT 6 RX
UPSTREAM TX
DOWNSTREAM TX1
DOWNSTREAM TX2
DOWNSTREAM TX3
DOWNSTREAM TX4
DOWNSTREAM TX5
DOWNSTREAM TX6
UPSTREAM RX
DOWNSTREAM RX1
DOWNSTREAM RX2
DOWNSTREAM RX3
DOWNSTREAM RX4
DOWNSTREAM RX5
DOWNSTREAM RX6
MUX
COLLISION DETECTION & CONTROL
802
804
806
808
810
812
814
816
818
820
822
824
826
828
830
832

FIG. 10

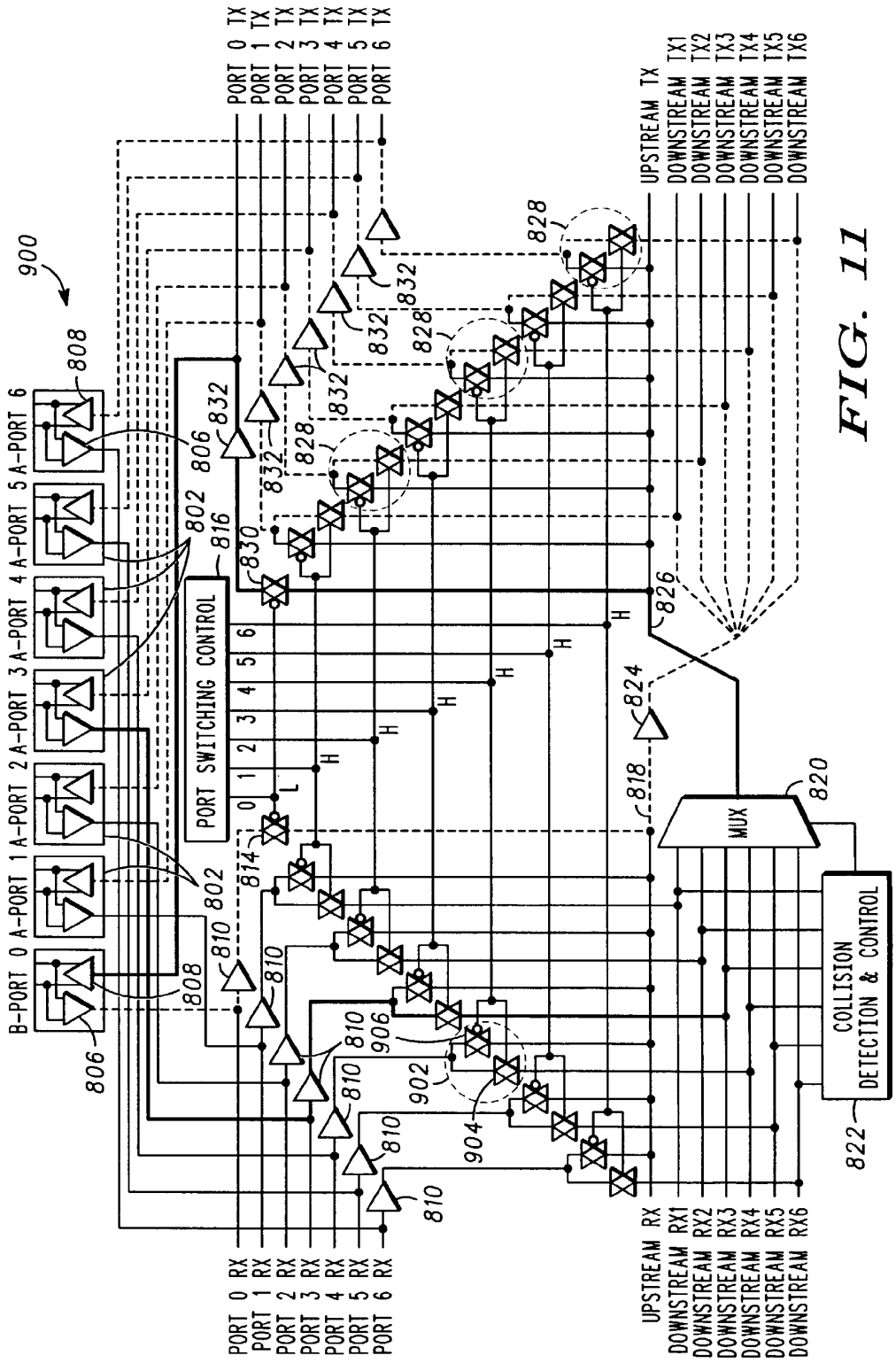
900
B-PORT 0
A-PORT 1
A-PORT 2
A-PORT 3
A-PORT 4
A-PORT 5
A-PORT 6
PORT SWITCHING CONTROL
0 1 2 3 4 5 6
L
H
MUX
COLLISION DETECTION & CONTROL
PORT 0 TX
PORT 1 TX
PORT 2 TX
PORT 3 TX
PORT 4 TX
PORT 5 TX
PORT 6 TX
UPSTREAM TX
DOWNSTREAM TX1
DOWNSTREAM TX2
DOWNSTREAM TX3
DOWNSTREAM TX4
DOWNSTREAM TX5
DOWNSTREAM TX6
PORT 0 RX
PORT 1 RX
PORT 2 RX
PORT 3 RX
PORT 4 RX
PORT 5 RX
PORT 6 RX
UPSTREAM RX
DOWNSTREAM RX1
DOWNSTREAM RX2
DOWNSTREAM RX3
DOWNSTREAM RX4
DOWNSTREAM RX5
DOWNSTREAM RX6
802
806
808
810
814
816
818
820
822
824
826
828
830
832
902
904
906

FIG. 11

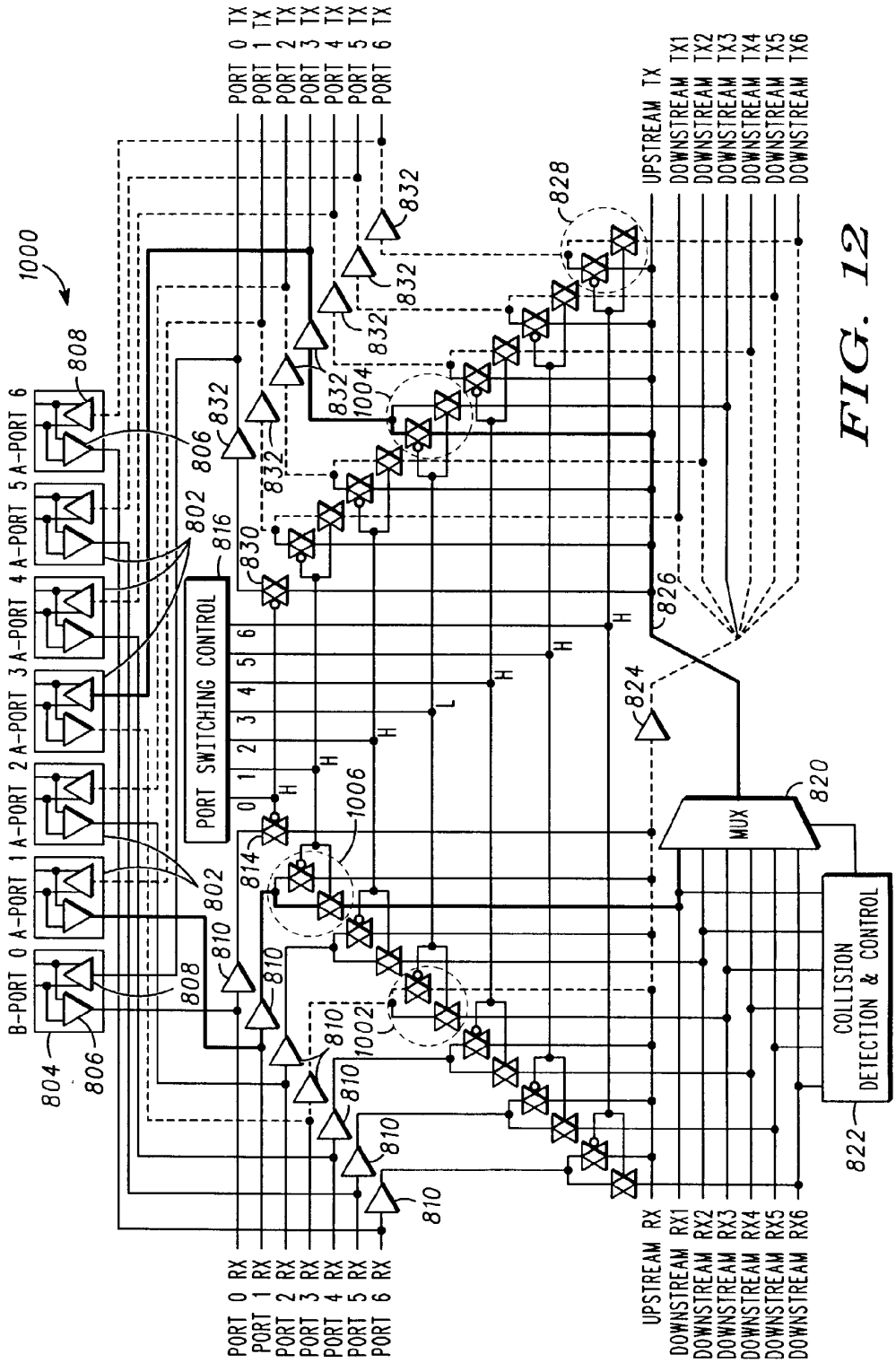
1000
B-PORT 0
A-PORT 1
A-PORT 2
A-PORT 3
A-PORT 4
A-PORT 5
A-PORT 6
PORT SWITCHING CONTROL
0 1 2 3 4 5 6
MUX
COLLISION DETECTION & CONTROL
PORT 0 TX
PORT 1 TX
PORT 2 TX
PORT 3 TX
PORT 4 TX
PORT 5 TX
PORT 6 TX
PORT 0 RX
PORT 1 RX
PORT 2 RX
PORT 3 RX
PORT 4 RX
PORT 5 RX
PORT 6 RX
UPSTREAM TX
DOWNSTREAM TX1
DOWNSTREAM TX2
DOWNSTREAM TX3
DOWNSTREAM TX4
DOWNSTREAM TX5
DOWNSTREAM TX6
UPSTREAM RX
DOWNSTREAM RX1
DOWNSTREAM RX2
DOWNSTREAM RX3
DOWNSTREAM RX4
DOWNSTREAM RX5
DOWNSTREAM RX6
804
806
808
810
814
816
820
822
824
826
828
830
832
1002
1004
1006
H
L

FIG. 12

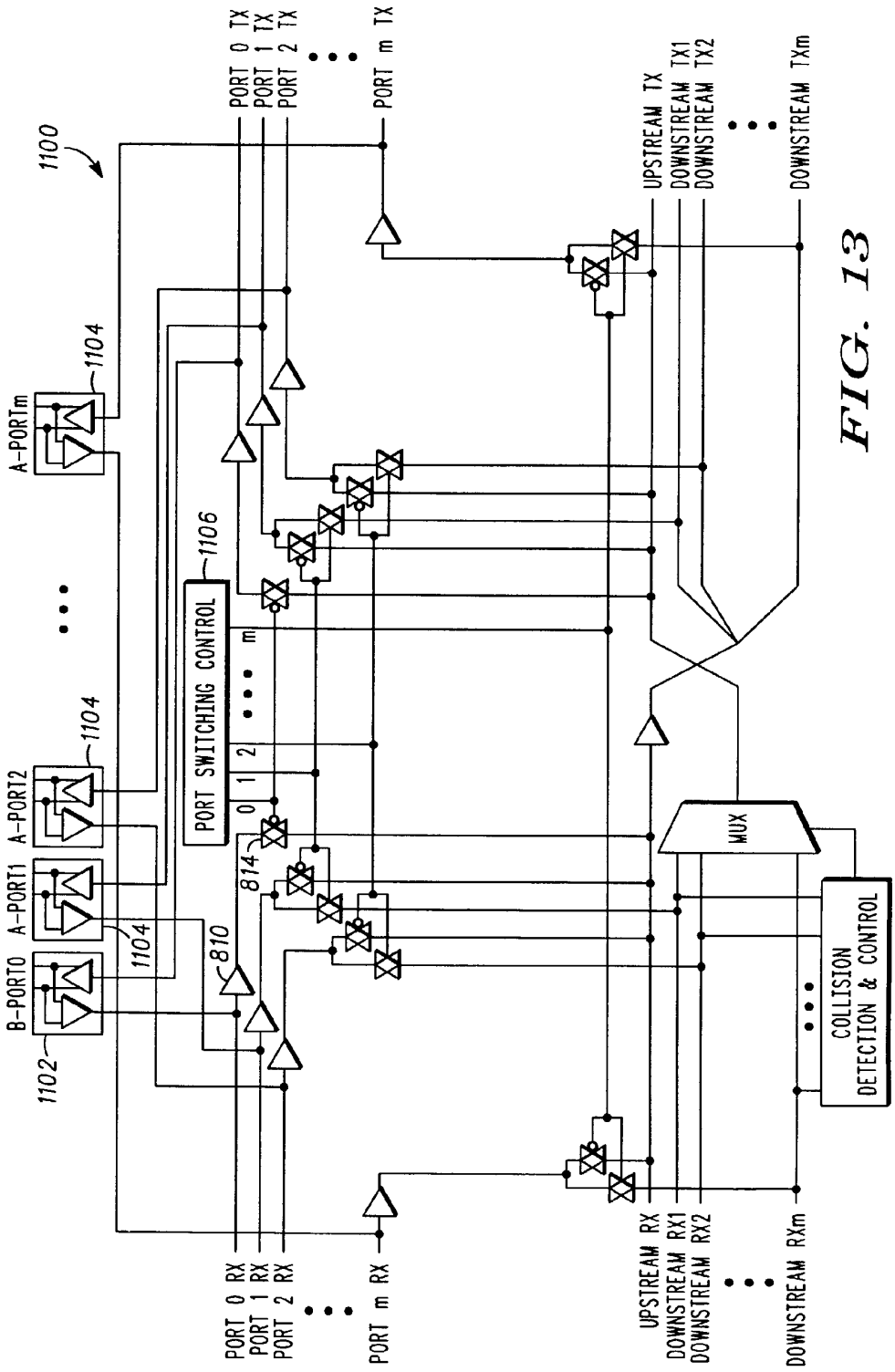
1100
PORT 0 TX
PORT 1 TX
PORT 2 TX
PORT m TX
UPSTREAM TX
DOWNSTREAM TX1
DOWNSTREAM TX2
DOWNSTREAM TXm
A-PORTm
1104
PORT SWITCHING CONTROL
1106
0
1
2
m
A-PORT2
A-PORT1
B-PORT0
1102
810
814
MUX
COLLISION DETECTION & CONTROL
PORT 0 RX
PORT 1 RX
PORT 2 RX
PORT m RX
UPSTREAM RX
DOWNSTREAM RX1
DOWNSTREAM RX2
DOWNSTREAM RXm

FIG. 13

DUAL-ROLE COMPATIBLE USB HUB DEVICE AND METHOD

BACKGROUND

[0001] The present invention relates to computer networking and, more particularly, to a universal serial bus (USB) hub device that is compatible with dual-role compatible devices such as USB On-the-Go (OTG) devices.

[0002] A common host-device protocol is the universal serial bus (USB) protocol. USB is a high speed serial bus that supports devices such as keyboards, printers, scanners, pointing devices, personal data assistants (PDA's) and cellular telephones. USB has become a standard within the computer industry as this protocol affords networking of multiple devices with minimal connections and user friendliness.

[0003] In a typical USB architecture, two or more devices are interconnected for communication. These devices are generally referred to as USB devices, which are defined by hardware and software components within the USB device. Generally, there are one or more USB devices that are defined as peripheral or "slave" devices, which may be input or output devices. Examples of typical peripherals include printers, modems, scanners or any other devices that exchange data with a host computer (or "master" device). The peripheral devices may be connected directly to a host or connected via a USB hub. Transactions occur between the peripherals and the host. The host controls the transactions between the peripheral devices and the host. Typically, the host controls the transactions according to the requirements of the USB 2.0 specification.

[0004] After the initial USB 2.0 specification was written, it was recognized that many peripheral devices, particularly portable devices, would benefit from being able to communicate directly with each other over the USB interface. However, since USB communication can only take place between a host (usually a personal computer) and a peripheral device, in order to qualify as a host, a device must take on several characteristics including storage for a large number of device drivers, the ability to source a large current and a series "A-type" host connector receptacle. It is not practical, however, for portable devices to have all of these characteristics. Moreover, in many cases these characteristics are not necessary in order to interface portable devices with each other. Accordingly, a supplement to the USB 2.0 specification was developed to enable peer-to-peer communication without the use of a personal computer or traditional host device. This supplement is commonly referred to as "On-the-Go" (OTG). Hence, On-the-Go (OTG) peripherals are classified as dual role devices (DRD's) that are able to operate as either a host controller or as a peripheral device dependent on the particular use the device is undergoing at a specific time. The devices are able to exchange the host controller functionality using a protocol device in the OTG supplement to the USB 2.0 specification. Additionally, the OTG supplement includes assurance that when these peripheral devices are attached to a standard host (i.e., a personal computer) the devices are only able to operate as peripherals.

[0005] Within the USB OTG supplement, operation between two peripheral devices is defined. Specifically, definitions sufficient to support this operation are included for aspects of host negotiation protocol (HNP) and the actions of transferring the host capability between two communicating devices. These devices are described as the "A-device" and the "B-device" and are determined based on which end of the connecting USB cable is attached to the device. According to the OTG supplement, the "A-device" starts out as the host in all transactions and always provides bus power (V_{bus}). This protocol and operation, however, does not support transfer of host functionality when more than two devices are used in a system.

[0006] Typically in USB, multiple devices may be attached using multiple USB ports on one device or by using a USB hub. However, in a system that would involve a hub where multiple OTG devices (as well as non-OTG devices) are attached, any of the OTG devices may desire to be the host of the system at various times using the resources of the other devices connected to the hub. Current USB hubs, however, do not support the transfer of the host functionality because typical hub structures are configured to have a single host connection that is fanned out to multiple device connections. Thus, a conventional USB hub is unable to change which port is the host port and participate in signaling required to support OTG host transfer protocol.

BRIEF DESCRIPTION OF THE DRAWINGS

[0007] **FIG. 1** illustrates an example of a system having On-the-Go devices connected with an On-the-Go hub constructed in accordance with the teachings of the present invention.

[0008] **FIG. 2** illustrates an example of a block diagram configuration of an OTG hub.

[0009] **FIG. 3** illustrates a block diagram showing initial port connections in the hub of **FIG. 2**.

[0010] **FIG. 4** illustrates a state diagram for an OTG hub operating in accordance with the teachings of the present invention.

[0011] **FIG. 5** illustrates an alternate port connection of the hub of **FIG. 2**.

[0012] **FIG. 6** illustrates still another alternate port connection of the hub of **FIG. 2**.

[0013] FIGS. **7-9** illustrate a flow chart of an example operation of an OTG hub.

[0014] **FIG. 10** illustrates an example of a wiring diagram of an OTG hub having seven ports constructed in accordance with the teachings of the present invention.

[0015] **FIG. 11** illustrates a particular example of signal routing for the circuit of **FIG. 8** given a particular configuration where a PC is connected to the hub.

[0016] **FIG. 12** illustrates a further example of signal routing for the hub of **FIG. 8** according to another particular configuration where an "A-type" port serves as a host device.

[0017] **FIG. 13** illustrates a wiring diagram of another example of an OTG hub.

DETAILED DESCRIPTION OF THE PREFERRED EXAMPLES

[0018] An example of a system configuration **100** is illustrated in **FIG. 1** utilizing an On-the-Go hub **102** con-

structed in accordance with the present disclosure. The system **100** may be any one of various systems where numerous devices are interconnected and, more particular, dual-role devices according to the USB OTG supplement. In the particular example of **FIG. 1**, this configuration might be found in an automobile, for example. In the system **100** a gateway **104** may be utilized that contains the On-the-Go hub **102**. Various devices may then be connected to the hub **102** within the gateway **104** such as a personal data assistant **106**, an On-the-Go phone **108** or a media interface **110**. Thus, in this system **100** it may be possible for the phone **108**, for example, to access contact information within the PDA **106**. As another example, the media interface **110** may utilize the display of the PDA **106** to play back video clips. In each of these examples, the device (i.e., the phone **108** or media interface **110**) is required to be the host of the system **100**. Furthermore, at different points in time when the various devices become host of the system, the host functionality must be transferred according to the USB 2.0 specification and the OTG host negotiation protocol (HNP). Accordingly, the hub **102**, which is designed to accommodate On-the-Go capability, should preferably be able to perform one or more of the following functions:

[**0019**] (1) Designate any of the ports in the hub to be the host port and configuring all other ports to be downstream ports;

[**0020**] (2) Participate in OTG host negotiation protocol;

[**0021**] (3) Remain compliant with USB hub requirements for any given host port configuration; and

[**0022**] (4) Provide conventional hub functionality of a personal computer or other standard host devices attached to the hub.

[**0023**] In accordance with the last criterion enumerated above, a Personal Computer **114** is shown optionally connected to the On-the-Go (OTG) hub **102** whereupon the remainder of the devices **106**, **108** and **110** will revert to a USB peripheral mode. Additional items may include non-OTG peripherals such as a Slave/Codec (Coder-Decoder) **116** that, in turn, is connected to a speaker **118** and a microphone **120** such as those that may be used in a hands-free telephone.

[**0024**] A block diagram of an example OTG hub **102** is illustrated in **FIG. 2**. The hub **102** includes a port switching device **200** that serves to physically switch signals between a plurality of A-type ports **202**. Additionally, a B-type port **204** may be included and connected to the port switching device **200**. This B-type port **204** is an override port to which the hub **102** always defers host control when a PC, for example, is connected thereto. In order to control the operation of the port switching device **200**, a microcontroller **206** is provided to effect switching operation within the port switching device **200**.

[**0025**] Also included within the hub **102** are a USB host controller **208** and a USB peripheral controller **210**, both being connectable to the port switching device **200**. The purpose of the USB host controller **208** is to effect host control when none of the devices connected to the A-ports **202** are assuming host control and a PC is not connected to the B-port **204**. Thus, the USB host controller **208** enables the hub **102** to act as a host when no other devices, such as On-the-Go devices, in particular, are asserting host control. Similarly, the USB peripheral controller **210** is provided for those instances where either an external OTG device connected to one of the A-ports **202** or a PC connected to the B-port **204** have asserted host control and the hub **102** is required to appear as a device rather than a host in order to comply with the USB 2.0 specification.

[**0026**] In operation, when the hub **102** is first powered up the USB host controller **208** asserts host control by placing a voltage V_{bus} on the A-ports **202**. Thus, the hub **102** acts as a host controller via the USB host controller **208** as illustrated in **FIG. 3** by connection lines **300**. The USB host controller **208** then determines which of the A-ports **202** have a corresponding external device connected thereto. In turn, the host controller **208** assigns addresses to each of the A-ports **202** having an external device connected thereto, effectively assigning addresses to those devices. Additionally, the host controller **208** will then enable a host negotiation protocol (HNP) feature on those external devices. It is noted that the hub **102** is not required to configure the devices since the hub **102** will not actually use the resources of those devices. Additionally, the hub **102**, either using the USB host controller **208** and/or the microcontroller **206**, determines which of the external devices are host negotiation protocol (HNP) capable for use in differentiating between disconnects and requests for host control. Once initialization is complete, the hub **102** enters a state where it waits for one of the external OTG devices (not shown) to request host control of the USB bus. This state is shown as state **400** in the state diagram illustrated in **FIG. 4**.

[**0027**] When a device connected to one of the A-ports **202** desires to obtain host control, that specific device requests the bus by removing a pull-up resistor (not shown) from a data line D+ (i.e., one of the wires in the USB cable transmitting the USB protocol signals). After a device requests the USB bus, the hub **102** will transfer host control to that device in accordance with the host negotiation protocol (HNP) described in the OTG supplement to the USB 2.0 specification. The hub **102** will then internally reconfigure the port switching device **200** under the control of the microcontroller **206** such that an A-port **202** connected to the device requesting the bus is configured as the upstream port as illustrated in **FIG. 5**. As shown in this figure, the port switching device **200** configures one of the A-ports **202**, labeled as $\mathbf{202}_{Host}$, to be directly connected to the remainder A-ports **202** and to the USB peripheral controller **210**. After the hub **102** completes reconfiguration of the port switching device **200**, the device connected to the A-port $\mathbf{202}_{Host}$ is enabled to begin the process of generating USB bus traffic. Additionally, the device connected to the A-port $\mathbf{202}_{Host}$ is allowed to enumerate the hub, i.e., assign specific addresses to the other ports, and, thus, to the external devices. After the device enumerates the hub **102**, the device then enumerates the other devices in the system and, if appropriate, enables them for host negotiation protocol (HNP). It is noted that enabling the other devices for HNP depends on the operation of the host device. For example, in some cases enabling other devices for HNP will be restricted to when the host is idle and in other cases the host device may allow HNP to be performed while it is active, which will be discussed later. The above-described operation is represented in the state diagram of **FIG. 4** as the transfer from state **400** to state **402** where the hub operates

as an OTG hub based on a device requesting control through disconnect of its pull-up resistor from the USB data line D+.

[0028] Should another device connected to one of the other A-ports **202** desire to become the bus controller (assuming that it has been enabled by the present host), the hub **102** recognizes a signal from the device, which is initiated by the device disconnecting its pull-resistor from the USB data line D+. In particular, the hub **102** is configured to detect this signal and, in turn, report the occurrence of the request to the present host device. This is in accordance with standard USB 2.0 hub protocol. In response, the host device will then issue a command to the hub **102** commanding the hub **102** to switch the host control A-port **202** to the particular A-port to which the new host device is connected. The previous host device then stops generating bus traffic and replaces its pull-up resistor on the USB data line D+. This operation is also illustrated in the state diagram of **FIG. 4**, showing a change from state **402** to state **404** when a host control switch is requested. Further, the state changes from state **404** to state **402** as the new host device detaches its pull-up resistor to assume host control.

[0029] After the hub **102** detects that a current host has stopped generating traffic (e.g., based on five milliseconds of idleness) microcontroller **206** will reconfigure the port switching device **200** so as to designate the particular A-port **202** connected to the new host device as the host port. Additionally, the microcontroller **206** will configure the port switching device **200** to attach the USB peripheral controller **210** to that particular port. Then, as previously described, the new host device proceeds to enumerate the hub and the other devices.

[0030] When an OTG device desires to cease being the host device, the device can cease generating USB traffic and replace its pull-up resistor onto the USB data D+. This situation is illustrated in the state diagram of **FIG. 4** showing movement from state **402** to state **400** where a device is indicated as attaching its pull-up resistor to release host control. When the hub **102** senses an extended idle state with no data, the hub **102** resumes its initial power-up operation as the default host of the system. As described previously, when this event occurs the USB host controller **208** is connected to the port switching device **200** under the control of the microcontroller **206** and the controller **208** proceeds to enumerate the hub **102** and host negotiation protocol (HNP) enable all of the devices that are capable of such enablement, as described previously.

[0031] In a further example, the hub **102** may allow a personal computer **600** to be attached to a USB "B-type" port **204**. In this situation, the hub **102** is configured to reconfigure the port switching device **200** such that the B-type port **204** is assigned as the host port and all of the other ports **202** are assigned to be downstream device ports as illustrated in **FIG. 6**. Each time of PC or similar device is connected to the B-type port, the hub **102** defers to host control by the PC, similar to an override Additionally, the USB peripheral controller **210** will remove its pull-up resistor if it was acting as an On-the-Go hub and attach to the B-port **204**. As illustrated in the state diagram of **FIG. 4**, when a PC is attached during either of states **400** or **402**, the system state moves to state **406** where the hub **102** operates as a standard USB hub. Removal of the pull-up resistor of the peripheral controller **210** also signals to any OTG device that was presently acting as a host (in the case of state **402** in **FIG. 4**) that the hub **102** has regained control of the USB bus as well as signaling to the personal computer **600** that the hub **102** is attached to the B-port **204**. Once host control is transferred to the personal computer **600**, the personal computer proceeds to enumerate the hub **102** and the other devices connected to ports **202** according to normal, non-OTG USB protocol.

[0032] The overall operation **102** of the previously-described hub is illustrated by the flow diagrams of **FIGS. 7, 8** and **9**. As shown in **FIG. 7**, the hub **102** is initialized during a power up start (block **700**). Next, the microcontroller **206** within the hub determines whether a connection exists on the B-port (block **702**). If a connection exists on the B-port, the microcontroller **206** within the hub **102** configures the port switching device **200** as a standard USB hub where the B-port is the upstream port (block **704**). Alternatively, if no connection exists on the B-port, the microcontroller **206** configures the hub **102** for default host operation and asserts V_{bus} to supply power to the ports **202** (block **706**). The hub then initializes a counter to a first port 1 of the A-type ports **202** (block **708**).

[0033] Once the counter is initialized, the hub **102** proceeds to power the port to which the internal counter is currently set (block **710**). Next, the hub determines whether a device is attached to the current port (block **712**). If no device is attached to the port (i.e., port 1) the counter is then incremented to the next A-type port (block **714**) (i.e., port 2). Alternatively, if a device is attached to the port currently under consideration, the hub sets an address on the device attached to the port (block **716**). Next, the hub **102** determines whether the device connected to the port **202** is On-the-Go capable (block **718**). If the device is determined as not being OTG capable, the counter is incremented to the next numbered port (block **714**). Alternatively, if the device has been determined as being OTG capable, the hub **102** enables the particular device connected to the port **202** for host negotiation protocol (block **720**). After the device has been HNP enabled, the counter is incremented to the next numbered port of the plurality of ports **202** in the hub **102** (block **714**).

[0034] The example procedure illustrated in **FIG. 7** proceeds to make the enumeration operations performed in blocks **710-720** until all the ports have had opportunity to be enumerated (block **722**). Once all port enumerations have been completed the hub **102** suspends the USB bus (block **724**). Additionally, the hub **102** is configured to generate an interrupt upon disconnection of any of the devices connected to the A-ports **202**. As described previously, the hub **102** stops all USB activity when this occurs. It is also noted that this is a part of the host negotiation protocol. Thus, the hub **102** continues to monitor whether at least one of the A-ports **202** change state to a disconnect of a device pull-up resistor (block **726**). If no change is detected, the hub **102** continues to suspend the bus. Alternatively, if a change is detected, the flow proceeds to block B, which is continued in **FIG. 8**.

[0035] One continuation of the procedure of **FIG. 7** illustrated in **FIG. 8** is an example where the hub **102** is configured as a peripheral device (this corresponds to state **402** as illustrated in **FIG. 4**). Furthermore, the example of **FIG. 8** illustrates a configuration where the hub is compliant with the USB OTG supplement to the USB 2.0 specification.

According to this example, after an A-port has changed to disconnect (i.e., the pull-up resistor has been disconnected) the hub **102** determines which of the A-ports **202** has changed state (block **728**). Next, the hub **102** activates a hub peripheral function, which is accomplished by connecting the USB peripheral controller **210** (block **730**). The hub **102** configures the A-port **202** that has been determined as requesting host control as the upstream port (block **732**), such as by reconfiguring the switching device **200**. The hub **102** applies a pull-up resistance to that port while leaving all other ports as downstream ports. It is noted also that this is a further step of the host negotiation protocol.

[**0036**] Once the hub **102** has been reconfigured to accommodate one of the A-type ports **202** as an upstream port, the hub **102** detects whether there is activity on the USB bus within a predetermined timeout period (block **734**). As shown in the example of **FIG. 8**, this timeout period is approximately five milliseconds. This timeout period, however, is arbitrary, but is preferably set to a value greater than three milliseconds. If no bus activity occurs within the predetermined timeout period the hub **102** removes the pull-up resistance and reconfigures all of the A-type ports **202** as downstream ports (block **736**). Alternatively, if bus activity occurs on the upstream port, the hub **102** continues to act in the peripheral state and waits for suspension of bus activity (block **738**). That is, the hub **102** performs normal hub processing as a peripheral device as described in the USB 2.0 specification until bus suspension. Furthermore, the hub **102** indicates that it is OTG capable if queried and any detach activity is only reported to the active DRD OTG host. Afterwards, the hub **102** detects whether the bus is suspended (block **740**). If the bus is not suspended, the process continues to wait for a suspend. Otherwise, when the bus is suspended, the hub **102** removes the pull-up resistance and reconfigures all A-ports as downstream ports (block **736**). Flow then returns to block A, which returns flow to block **706** in **FIG. 7** where the hub **102** once again configures for host operation (block **706**).

[**0037**] An alternate example of a continuation of the process in **FIG. 7** is illustrated in **FIG. 9** showing a procedure when the hub **102** is configured as a peripheral device, but is not compliant with the OTG supplement to the USB 2.0 specification. Similar to the portion of the procedure described in blocks **728**, **730**, **732**, **734**, **736**, **738** and **740** of **FIG. 8**, the procedure shown in **FIG. 9** implements this same procedure. However, after the microcontroller **206** checks whether the USB bus is suspended (block **740**) the procedure of **FIG. 9** differs from that illustrated in **FIG. 8**. In particular, if the bus is not suspended, the hub **102** checks whether a port disconnect has been detected (block **742**). If no port disconnect is detected, the procedure returns to wait for bus suspension (block **738**). On the other hand, if a port disconnect is detected, the hub **102** then reports the disconnect to the current active host (block **744**). After reporting the disconnect to the active host, the hub **102** checks whether host negotiation protocol is enabled. This determination may be based on hub "snooping packets" sent by the microcontroller **206** to the ports **202**. The microcontroller **206** then watches for a host negotiation protocol enabled message. If host negotiation protocol is not enabled, the hub **102** then continues to wait for bus suspension (i.e., return from block, **746** to block **738**). If, however, host negotiation protocol is enabled, the microcontroller **206** will then direct the port switching device **200** to be configured such that the device requesting host control is configured as the upstream port as indicated by flow from block **746** to block **732** in **FIG. 9**. Afterward, the procedure repeats until either bus activity is idle as determined in block **734** or the bus is suspended as determined in block **740** whereupon flow proceeds to block **736** where the microcontroller **206** configures all the A-type ports **202** as downstream ports and flow reverts back to block **706** shown in **FIG. 7**.

[**0038**] Turning to **FIG. 10**, this drawing shows an example schematic for a hub **800** constructed in accordance with the teachings of the present invention having six A-type ports **802** as well as a B-type port **804**. As may be seen in **FIG. 8**, these ports may be designated as port 0 through port 6 where port 0 is the B-type port and ports 1-6 are the A-type ports **802**. It is further noted that each of the port types **802**, **804** contain a receive (RX) buffer **806** and a transmit (TX) buffer **808**. Each of the receive buffers **806** are connected to another set of corresponding RX buffers **810**, which deliver the received signals to a respective plurality of switch pairs **812** (except for the signal from the B-type port which is delivered to a single, inverting switch **814**). Each of the pairs of switches **812** includes a non-inverting switch and an inverting switch (meaning that the switch is turned on when a high voltage is applied form the non-inverting switch, whereas a low voltage applied to the inverting switch causes the inverting switch to turn on). Thus, given a discrete input of either high or low voltage, switch pairs **812** alternately turn on dependent on the input voltage. Switching of the switch pairs **812** and switch **814** is controlled by a port switching control **816**.

[**0039**] The outputs of the inverting type switches of the switch pairs **812** and switch **814** are connected to an upstream receive bus **818** whereas the outputs of the non-inverting switches of the switch pairs **812** are delivered to respective downstream receive buses RX**1** through RX**6**. Each of these receive buses RX**1** through RX**6** are input to a multiplexer **820**, which is controlled by a collision detection and controller **822**. The collision detection and controller **822** detects collisions occurring between received signals and selectively arbitrates between these signals thereby controlling the output of the multiplexer **820**.

[**0040**] The upstream receive bus **818** is connected through a buffer **824** to a plurality of downstream transmit lines TX**1** through TX**6**. The output of the multiplexer **820** is, in turn, connected to an upstream transmit bus **826**. Connected to the downstream transmit lines TX**1**-TX**6** are non-inverting switches of a plurality of switch pairs **828**, which each also include an inverting switch. Each of the inverting switches of the switch pairs **828** is connected to the upstream transmit bus **826**. Switching control for the switch pairs **828** is also performed by the port switching control **816**. It is noted that the control voltages delivered to the switch pairs **828** are the same as those delivered to corresponding switch pairs **812**. Furthermore, the correspondence between each of the switch pairs **812** and **828** is dependent on a particular one of the ports. For example, a switch pair **812** connected to the receive buffer **806** of port 1 receives the same control voltage as the switch pair **828** that is connected to the transmit buffer **808** of the same port 1.

[**0041**] Also connected to the upstream transmit bus **826** is an inverting switch **830**, which is controlled by the same control voltage from port switching control **816** as inverting

switch **814**. The outputs of each of the switch pairs **828** and switch **830** are connected via a plurality of respective buffers **832** to corresponding transmit buffers **808** of the ports **802** and **804**. This structure illustrated in **FIG. 10** affords selective switching for either designating the B-type port **804** as the upstream port or selectively assigning one of the A-type ports **802** as the upstream port. Examples of how this disclosed structure achieves this function will be described in connection with FIGS. **11-12**.

[**0042**] The example of **FIG. 11** illustrates the case where a PC (not shown), for example, is connected to the B-port **804** (i.e., port 0). Thus, in this example the hub **800** is configured to behave like a standard USB hub similar to the example of **FIG. 5**. In this configuration, the port switching control **816** is configured to output a low voltage to the port 0 path switches **814** and **830**, whereas all of the remaining control signals from the port switching control **816** to the switch pairs **812** and **828** are high voltage. Thus, the upstream port 0 is connected to the upstream receive bus **818** and the transmit buffer **808** of port 0 is connected to the output of multiplexer **820**.

[**0043**] As illustrated in **FIG. 11 a** signal received on B-type port 0 follows a particular receive path (indicated with a dashed line). Data received from this upstream port 0 is directly transmitted to the transmit buffers **808** of ports **1** through **6** via buffer **824** and the downstream transmit lines TX**1** through TX**6**. Because the data received from the upstream B-type port is broadcast to all of the downstream ports **802**, this configuration is in accordance with the USB 2.0 specification.

[**0044**] Also illustrated in **FIG. 11** is the transmit path for signals sent to the transmit buffer **808** of the B-type port 0 (indicated with a solid, bolded line). In this particular example, the downstream port **802** labeled "port 4" is shown sending data to the upstream port "port 0". Thus, a signal received by the receive buffer **806** of port 4 is shown routed to a switch pair **902** corresponding to port 4. Since the port switching control **816** asserts a high signal, a non-inverting switch **904** of the pair **902** turns on while an inverting switch **906** is turned off. Hence, the signal is routed to downstream receive line RX**4**, which is connected to multiplexer **820**. As described previously, the multiplexer **820** arbitrates between the downstream receive lines under the direction of control **822**. The output of the multiplexer **820** is connected to the upstream transmit bus **826**. As shown in **FIG. 11**, the signal from port 4 is delivered to receive buffer **808** of port 0 via inverting switch **830** and buffer **832**.

[**0045**] **FIG. 12** illustrates an example of the hub **800** configured to be On-the-Go compatible. In this example, an A-type port **802** (e.g., port 3) is selected as the host port by the port switching control **816**. This selection is effected by asserting high signals on all of the outputs of the port switching control **816** except for the input to the port 3 switch pairs **1002** and **1004**, which receive a low signal. As a result, a signal received by the receive buffer **806** of the upstream port 3 is broadcast to the remaining ports 1, 2 and 4-6 as indicated by the dashed line in **FIG. 12**. It is also noted that since the example of **FIG. 12** illustrates a USB On-the-Go hub, the signal can not be transmitted to the B port **804**.

[**0046**] Additionally, the example of **FIG. 12** illustrates when a device connected to port 1, for example, sends a signal to the host port 3 via hub **800** (i.e., from the receive buffer **806** of port 1 to the transmit buffer **808** of port 3). Here, the signal path is illustrated by a solid bold line from port 1 to port 3 via buffer **810**, the non-inverting switch of switch pair **1006**, multiplexer **820**, the inverting switch of switch pair **1004** to the transmit buffer **808** of port 3. The selection of the particular signal from port 1 is accomplished by the collision detection and control **822**, thereby allowing the signal to pass to the upstream transmit bus **826**. It is also noted that this is in accordance with the USB 2.0 specification.

[**0047**] In another example, **FIG. 13** illustrates an example where any number of m+1 ports may be utilized in a USB OTG compatible hub **1100**. As shown, a B-type port **1102** labeled port 0 is included as well as an "m" number of A-type ports **1104**, which are labeled as ports 1 through "m". Similar to the previous examples of FIGS. **10-12**, the hub **1100** includes a port switching control **1106** that generates control signals to configure the ports as either upstream or downstream based on which particular port is granted host control. Only one port is configured as the upstream port at any point in time. Thus, the port **1104** with host control is configured as the upstream port whereas all other A-type ports **1104** are configured as downstream ports. As with the previous examples, if a personal computer is attached at any time to the B-port **1102** (this B-type port **1102** being optional), the B-type port **1102** is enabled (like an override), configured as the upstream port and is given host control. When any of the A-type ports **1104** have host control and no personal computer is attached to the B-type port **1102**, this port is disabled

[**0048**] Broadly, the port switching control **1106** function asserts the output control line corresponding to the upstream port and D-asserts (i.e., provides a high signal) for the control lines corresponding to the downstream ports. These control signals turn on and off signal paths between the various ports such that the hub **1100** is properly configured for operation according to the USB 2.0 specification. That is, the port configured as the upstream port behaves like a standard upstream port and the ports configured as the downstream ports behave like standard downstream ports as defined in USB 2.0 specification.

[**0049**] Although certain apparatus and methods constructed in accordance with the teachings of the invention have been described herein, coverage of this patent is not limited thereto. On the contrary, this patent covers all embodiments of the teachings of the invention falling fairly within the scope of the appended claims, either literally or under the doctrine of equivalents.

What is claimed is:

1. A Universal Serial Bus hub apparatus comprising:

a plurality of ports configured to connect the hub device to one or more external devices;

a controller device; and

a port switching device controlled by the controller device for selectively connecting one of the plurality of ports to serve as a host port and the other ones of the plurality of ports to serve as device ports.

2. The apparatus according to claim 1, wherein each of the plurality of ports comprises an A-type of Universal Serial Bus port.

3. The apparatus according to claim 2, further comprising:

an override port comprising a B-type of Universal Serial Bus port allowing connection of a personal computer to obtain host control.

4. The apparatus according to claim 1 further comprising:

a collision detector and control device configured to detect signal collisions occurring between signals received by the plurality of ports acting as device ports from the external devices that are being transmitted to the host port and mitigate the collisions by selectively switching a multiplexing circuit.

5. The apparatus according to claim 1, wherein the controller detects when the port acting as host port is idle for a predetermined period and controls the port switching device to connect the hub apparatus as a host control.

6. The apparatus according to claim 1, wherein the controller comprises a microcontroller, a USB host controller and a USB peripheral controller.

7. The apparatus according to claim 6, wherein the microcontroller is configured to communicatively connect the USB host controller to the port switching device during a start-up of the hub apparatus.

8. The apparatus according to claim 7, wherein the microcontroller is configured to detect when a request by an external device to act as host control is received via one of the plurality of ports to which the external device is attached and control the switching device to reconfigure the switching device such that all other ports of the plurality ports are device ports in response to the detection of the request.

9. The apparatus according to claim 8, wherein the microcontroller is configured to connect the USB peripheral controller port acting as host port is idle for a predetermined period and controls the port switching device to connect the hub apparatus as a host control.

10. The apparatus according to claim 1 wherein the hub is configured to operate according to the On-the-Go supplement to the USB 2.0 specification and the ports are configured to be connectable to On-the-Go dual-role devices.

11. The apparatus according to claim 1, wherein the controller is configured to assume host control during the occurrence at least one of start up of the hub, idleness of a current host device and transfer of host control between two peripheral devices.

12. A USB communication system comprising:

one or more dual-role peripheral devices; and

a hub comprising:

a plurality of ports configured to connect the hub device to the one or more peripheral devices;

a controller device; and

a port switching device controlled by the controller device for selectively connecting one of the plurality of ports to serve as a host port allowing a dual-role peripheral of the one or more dual-role peripheral device to assume host control and the other ones of the plurality of ports to serve as device ports.

13. The system according to claim 12, wherein each of the plurality of ports comprises an A-type of Universal Serial Bus port.

14. The system according to claim 13, further comprising:

an override port comprising a B-type of Universal Serial Bus port allowing connection of a personal computer to obtain host control.

15. The system according to claim 12 further comprising:

a collision detector and control device configured to detect signal collisions occurring between signals received by the plurality of ports acting as device ports from the external devices that are being transmitted to the host port and mitigate the collisions by selectively switching a multiplexing circuit.

16. The system according to claim 12, wherein the controller detects when the port acting as host port is idle for a predetermined period and controls the port switching device to connect the hub apparatus as a host control.

17. The system according to claim 12, wherein the controller comprises a microcontroller, a USB host controller and a USB peripheral controller.

18. The system according to claim 17, wherein the microcontroller is configured to communicatively connect the USB host controller to the port switching device during a start-up of the hub apparatus.

19. The system according to claim 18, wherein the microcontroller is configured to detect when a request by an external device to act as host control is received via one of the plurality of ports to which the external device is attached and control the switching device to reconfigure the switching device such that all other ports of the plurality ports are device ports in response to the detection of the request.

20. The system according to claim 19, wherein the microcontroller is configured to connect the USB peripheral controller port acting as host port is idle for a predetermined period and controls the port switching device to connect the hub apparatus as a host control.

21. The system according to claim 12 wherein the hub is configured to operate according to the On-the-Go supplement to the USB 2.0 specification and the ports are configured to be connectable to On-the-Go dual-role devices.

22. The system according to claim 12, wherein the controller is configured to assume host control during the occurrence at least one of start up of the hub, idleness of a current host device and transfer of host control between two peripheral devices.

23. A method of operating a USB hub having a plurality of ports and a hub controller for controlling routing of the ports, the method comprising:

operating the hub as a host device having host control during a start-up period;

determining using the hub controller which of the plurality of ports are connected to corresponding external devices and assigning addresses to those devices;

enabling a host negotiation protocol on the external devices; and

transferring host control from the hub to a first external device connected to a first port of the plurality of ports when a request for host control is received by the hub controller from the first external device via the first port.

24. The method according to claim 23 further comprising:

transferring host control back to the hub controller from the first external device after an external device to which host control was transferred no longer requests host control according to a predetermined condition.

25. The method according to claim 24, wherein the predetermined condition comprises when no communication occurs on the port to which the first external device is connected indicating that the first external device is idle.

26. The method according to claim 24, wherein the predetermined condition comprises when a signal from the first external device is received by the hub indicating that the external device no longer requests host control.

27. The method according to claim 23, further comprising:

transferring host control to a second external device connected to a second port of the plurality of ports when a signal requesting host control is received by the hub via the second port from the second external device.

28. The method according to claim 23, further comprising:

transferring host control to an override port of the plurality of ports when a personal computer is connected to the override port.

* * * * *