IN THE UNITED STATES DISTRICT COURT
FOR THE DISTRICT OF DELAWARE

APTIV TECHNOLOGIES AG, Plaintiff, v. MICROCHIP TECHNOLOGY INC., Defendant.	C.A. No. 23-307 (JDW)

CORRECTED JOINT CLAIM CONSTRUCTION BRIEF

TABLE OF CONTENTS

Page

I. INTRODUCTION 1

A. Plaintiff's Opening Statement 1

B. Defendant's Opening Statement 1

II. AGREED-UPON CONSTRUCTIONS 2

III. DISPUTED CONSTRUCTIONS 3

A. Term Nos. 1 and 2: "connecting the consumer device via the second USB port to the USB hub via the first USB port…" 3

1. Plaintiff's Opening Position 3

2. Defendant's Answering Position 6

a. No error is evident from the face of the patent. 7

b. Aptiv's arguments for correction fail. 8

3. Plaintiff's Reply Position 9

4. Defendant's Sur-Reply Position 13

B. Term No. 5: "Having" and Being "Connected to" the Same Plurality of Ports ... 16

1. Plaintiff's Opening Position 16

2. Defendant's Answering Position 20

a. The plain meaning of "having" is "including as part of another." 20

b. The '037 and '899 patent claims are nonsensical under the plain meaning of "having." 21

c. Aptiv's attempt to interpret "having" to include "connected" fails. 23

d. Aptiv fails to explain why its correction should be selected over others. 26

3. Plaintiff's Reply Position 26

4. Defendant's Sur-Reply Position 30

C. Term No. 6: "providing efficient communications among USB components of a data communication system" 34

1. Plaintiff's Opening Position 34

2. Defendant's Answering Position 36

3. Plaintiff's Reply Position 39

4. Defendant's Sur-Reply Position 41

D. Term No. 7: "wherein the USB hub and USB bridge have different components and functionality" 42

1. Plaintiff's Opening Position 42

2. Defendant's Answering Position 43

3. Plaintiff's Reply Position 47

4. Defendant's Sur-Reply Position 48

E. Term No. 8: "signal detection circuit" 50

1. Plaintiff's Opening Position 50

2. Defendant's Answering Position 52

3. Plaintiff's Reply Position 55

4. Defendant's Sur-Reply Position 57

F. Term No. 9: "routing logic circuit" 59

1. Plaintiff's Opening Statement 59

2. Defendant's Answering Position 60

3. Plaintiff's Reply Position 62

4. Defendant's Sur-Reply Position 64

G. Term No. 10: "some combination of embedded devices and consumer devices that are USB Devices along with at least one that is the second USB Host" 65

1. Plaintiff's Opening Position 65

2. Defendant's Answering Position 67

3. Plaintiff's Reply Position 69

IV. CONCLUSION 71

A. Plaintiff's Position 71

B. Defendant's Position 71

TABLE OF AUTHORITIES

Page(s)

Cases

3G Licensing, S.A. v. Blackberry Ltd.,
C.A. No. 17-82-LPS-CJB, 2018 WL 4375091 (D. Del. Sept. 13, 2018).....60

Apex Inc. v. Raritan Comput., Inc.,
325 F.3d 1364 (Fed. Cir. 2003)..... *passim*

Barrette Outdoor Living, Inc. v. Fortress Iron, LP,
Case No. 3:21-CV-2008-E, 2023 WL 5503030 (N.D. Tex. Aug. 25, 2023).....65, 69

BASF Corp. v. Johnson Matthey Inc.,
875 F.3d 1360 (Fed. Cir. 2017).....60

Bd. of Regents of the Univ. of Tex. Sys. v. BENQ Am. Corp.,
533 F.3d 1362 (Fed. Cir. 2008).....24, 44

Berkheimer v. HP Inc.,
881 F.3d 1360 (Fed. Cir. 2018).....41

Catalina Marketing International, Inc. v. Coolsavings.com, Inc.,
289 F.3d 801 (Fed.Cir.2002).....37

In re Copaxone Consol. Cases,
906 F.3d 1013 (Fed. Cir. 2018)..... *passim*

CUPP Cybersecurity, LLC v. Trend Micro, Inc.,
2021 WL 5865393 (N.D. Tex. Dec. 10, 2021) 49

Endo Pharms. Inc. v. Watson Lab'ys, Inc.,
No. 2:13-CV-192-JRG, 2014 WL 2859349 (E.D. Tex. June 23, 2014) 47, 48

Funai Elec. Co., Ltd. v. Daewoo Elecs. Corp.,
616 F.3d 1357 (Fed. Cir. 2010).....36

Grp. One, Ltd. v. Hallmark Cards, Inc.,
407 F.3d 1297 (Fed. Cir. 2005).....7, 10

H-W Tech., L.C. v. Overstock.com, Inc.,
758 F.3d 1329 (Fed. Cir. 2014).....4, 10

Hill-Rom Servs., Inc. v. Stryker Corp.,
755 F.3d 1367 (Fed. Cir. 2014).....33

Interval Licensing LLC v. AOL, Inc.,
766 F.3d 1364 (Fed. Cir. 2014).....41

IQASR LLC v. Wendt Corp.,
825 F. App'x 900 (Fed. Cir. 2020) 62

Iridescent Networks, Inc. v. AT&T Mobility, LLC,
933 F.3d 1345 (Fed. Cir. 2019).....60, 61

Javelin Pharms., Inc. v. Mylan Lab'ys Ltd.,
2017 WL 4511352 (D. Del. Oct. 10, 2017) 49

Karlin Tech., Inc. v. Surgical Dynamics, Inc.,
177 F. 3d 968 (Fed. Cir. 1999).....61, 63

KLA-Tencor Corp. v. Xitronix Corp.,
2011 WL 318123 (W.D. Tex. Jan. 31, 2011) 41

Lampi Corp. v. Am. Power Prods. Inc.,
228 F.3d 1365 (Fed. Cir. 2000).....21, 28

Limestone Memory Sys. LLC v. Micron Tech., Inc.,
No. 8:15-cv-00278, 2019 WL 6655273 (C.D. Cal., Sept. 11, 2019).....53

Masimo Corp. v. Philips Elecs. N. Am. Corp.,
C.A. No. 09-80-LPS, 2015 WL 7737308 (D. Del. Dec. 1, 2015).....60

Merck & Co. v. Teva Pharms. USA, Inc.,
395 F.3d 1364 (Fed. Cir. 2005).....44

Microchip Tech. Inc. v. Aptiv Servs. US, LLC,
No. 17-1194-LPS-CJB, 2019 WL 2502417 (D. Del. Jun. 17, 2019).....6, 9

Microsoft Corp. v. I4I Ltd. P'ship,
564 U.S. 91 (2011).....17

Midwest Athletics & Sport Alliance LLC v. Ricoh USA, Inc.,
No. 2:19-cv-514-JDW, 2020 WL 6158233 (E.D. Pa. Oct. 21, 2020).....36, 39

Minton v. NASD, Inc.,
336 F.3d 1373 (Fed. Cir. 2003).....35, 37, 40

MLR, LLC v. Kyocera Wireless Corp.,
No. 05-CV-0935-BAJB, 2006 WL 6143076 54

MTD Prods. Inc. v. Iancu,
933 F.3d 1336 (Fed. Cir. 2019).....52

Nature Simulation Sys. v. Autodesk, Inc.,
23 F.4th 1334 (Fed. Cir. 2022) 43, 46

Nautilus, Inc. v. Biosig Instruments, Inc.,
572 U.S. 898 (2014).....17, 36, 64

Novo Indus. L.P. v. Micro Molds Corp.,
350 F.3d 1348 (Fed. Cir. 2003).....4, 10, 26

Prolifiq Software Inc. v. Veeva Sys. Inc.,
No. C 13-03644 SI, 2014 WL 3870016 (N.D. Cal. Aug. 6, 2014) 44

Rain Computing, Inc. v. Samsung Elecs. Am., Inc.,
989 F.3d 1002 (Fed. Cir. 2021).....53

Skky, Inc. v. MindGeek, s.a.r.l.,
859 F.3d 1014 (Fed. Cir. 2017).....50

Sonix Tech. Co v. Publ'ns Int'l, Ltd.,
844 F.3d 1370 (Fed. Cir. 2017).....48, 49

Sorensen v. Int'l Trade Comm'n,
427 F.3d 1375 (Fed. Cir. 2005).....42, 45, 46

SRI Int'l v. Matsushita Elec. Corp. of Am.,
775 F.2d 1107 (Fed. Cir. 1985).....9

Synchronoss Techs., Inc. v. Dropbox, Inc.,
987 F.3d 1358 (Fed. Cir. 2021).....24

Syntex (U.S.A.) LLC v. Apotex, Inc.,
407 F.3d 1371 (Fed. Cir. 2005).....40, 42

Team Worldwide Corp. v. Intex Recreation Corp.,
No. 2020-1975, 2021 WL 4130634 (Fed. Cir. Sept. 9, 2021) 54, 58

Teleflex, Inc. v. Ficosa N. Am. Corp.,
299 F.3d 1313 (Fed. Cir. 2002).....15

Tinnus Enters., LLC v. Telebrands Corp.,
733 F. App'x 1011 (Fed. Cir. 2018) 43, 46

Ultimax Cement Mfg. Corp. v. CTS Cement Mfg. Corp.,
587 F.3d 1339 (Fed. Cir. 2009).....4

Välinge Innovation AB v. Halstead New England Corp.,
C. A. No. 16-1082, 2018 WL 2108199 (D. Del. May 7, 2018).....61, 63

Wasica Fin. GmbH v. Cont'l Auto. Sys., Inc.,
853 F.3d 1272 (Fed. Cir. 2017).....37, 44

Williamson v. Citrix Online, LLC,
792 F.3d 1339 (Fed. Cir. 2015) (en banc).....50, 53, 55, 60

WSOU Invs. LLC v. Google LLC,
No. 2022-1066, 2023 WL 6210607 (Fed. Cir. Sept. 25, 2023).....20, 23

XR Commc'ns, LLC v. ARRIS Sols., Inc.,
No. 2022-1125, 2023 WL 3529830 (Fed. Cir. May 18, 2023).....54, 58

Statutes

35 U.S.C. § 112(f)..... *passim*

Other Authorities

MPEP § 2111.03.....21

I. INTRODUCTION

A. Plaintiff's Opening Statement

The parties' claim construction disputes fall into two categories: judicial correction and indefiniteness. Aptiv seeks correction of two sets of errors.[1] Each error would have been obvious to a person of ordinary skill in the art ("POSITA") and thus should be judicially corrected. The remaining six terms are various phrases that Microchip argues are indefinite and for which Microchip bears the burden of proof by clear and convincing evidence. Microchip cannot meet that burden: a POSITA would have had no trouble understanding the phrases Microchip identifies and certainly would have understood them well enough to reasonably ascertain the scope of the claimed inventions. The Court should thus find those terms not indefinite.

B. Defendant's Opening Statement

For disputed ***Terms 1-4***, in the '420 patent,[2] Aptiv asks the Court to "correct" the claims by making substantive changes to claim language Aptiv now disfavors. The Court should not do so, because there are no errors evident on the face of the disputed claim language.

For ***Term 5***, affecting all claims of the '037 and '899 patents, Aptiv asks the Court to interpret the word "having" contrary to the USPTO's Manual of Patent Examining Procedure (MPEP)—and Federal Circuit caselaw—and in a way that makes no sense for hardware components. Without Aptiv's improper interpretation, the claims are indefinite.

---

[1] Aptiv is no longer seeking correction of terms 3 and 4 identified in the original Joint Claim Construction Chart (D.I. 115 at 4-5).

[2] Aptiv asserts U.S. Patent Nos. 9,460,037 ("'037 patent"); 9,619,420 ("'420 patent"); 10,545,899 ("'899 patent"); 11,176,072 ("'072 patent"); and 11,681,643 ("'643 patent"), which share the same specification.

Term 6, in the ’072 patent, recites “providing efficient communication.” ***Term 7***, affecting all ’643 patent claims, requires that the USB hub and USB bridge have “different components and functionality.” Aptiv admits that neither term has a well-understood meaning, and no meaning is discernible under claim construction principles. The terms are thus indefinite, and the Court should reject Aptiv’s attempt to read them out of the claims.

Term 8, “signal detection circuit,” affects claims 1-9 from the ’643 patent. It is a means-plus-function limitation without any supporting structure in the specification. The specification does not even mention the term or explain how the claimed function is achieved. Thus, the term is indefinite.

Term 9, “routing logic circuit,” affects all ’643 patent claims, and ***Term 10***, “some combination of embedded devices and consumer devices,” is in claim 16 of the ’037 patent. For both, there is insufficient basis for a person of skill of ordinary skill in the art (“POSITA”) to discern the scope of the claims, and they are thus indefinite.

II. AGREED-UPON CONSTRUCTIONS

The parties agree on the constructions for the following terms and request that the Court adopt them.

Asserted Claim(s)[3] and Patent(s)	Claim Terms or Phrases	Agreed-Upon Construction
’420 patent, claim 20	“wherein said USB routing switch is configured to simultaneously provide the second communication path between said first USB port and said third USB port”	“wherein said USB routing switch is configured to simultaneously provide the third communication path between said first USB port and said third USB port”

[3] The parties only identify the independent claim where a term first appears but the proposed construction applies to relevant dependent claims as well.

Asserted Claim(s)[3] and Patent(s)	Claim Terms or Phrases	Agreed-Upon Construction
’037 patent, cl. 1 ’072 patent, cl. 1	“embedded Universal Serial Bus (USB) Host” / “embedded USB host”	“USB host physically embedded in a vehicle”

III. DISPUTED CONSTRUCTIONS

A. Term Nos. 1 and 2: “connecting the consumer device via the second USB port to the USB hub via the first USB port…”

No.	Claim Term	Plaintiff’s Proposed Construction	Defendant’s Proposed Construction
1	“connecting the consumer device via the second USB port to the USB hub via the first USB port through the USB routing switch and the USB bridge” ’420 patent, claim 13	“connecting the consumer device via the second USB port to the USB host via the first USB port through the USB routing switch and the USB bridge”	Plain and ordinary meaning
2	“connecting the consumer device via the second USB port to the USB hub via the first USB port through the USB routing switch and the USB hub” ’420 patent, claim 13	“connecting the consumer device via the second USB port to the USB host via the first USB port through the USB routing switch and the USB hub”	Plain and ordinary meaning

1. Plaintiff’s Opening Position

The Court should correct the obvious errors in claim 13 of the ’420 patent: in two instances, the claim recites connecting the consumer device “to the USB ***hub*** via the first USB port” but should instead recite connecting the consumer device “to the USB ***host*** via the first USB port.”

An obvious error, warranting correction, is one that is evident from the face of the patent. *See H-W Tech., L.C. v. Overstock.com, Inc.*, 758 F.3d 1329, 1333 (Fed. Cir. 2014). Such "obvious" errors should be corrected by district courts at claim construction when: "(1) the correction is not subject to reasonable debate based on consideration of the claim language and the specification"—from the perspective of one of ordinary skill in the art—and "(2) the prosecution history does not suggest a different interpretation of the claims." *Novo Indus. L.P. v. Micro Molds Corp.*, 350 F.3d 1348, 1354 (Fed. Cir. 2003); *Ultimax Cement Mfg. Corp. v. CTS Cement Mfg. Corp.*, 587 F.3d 1339, 1353 (Fed. Cir. 2009).

The errors in claim 13 would have been obvious to a POSITA based on the surrounding claim language. (Ex. 40 ¶¶ 21-25.) Claim 13 recites a method of operating a USB hub module and establishes that the hub module comprises "***a USB hub*** configured to be ***interconnected to a first USB port*** connected to a USB host ***and a second USB port*** connected to a consumer device." The disputed limitations, however, recite "connecting the consumer device via the ***second USB port to the USB hub via the first USB port***"—*i.e.*, connecting the second USB port to the USB hub "via the first USB port." This does not make sense because, as stated in the preamble, the "second USB port" is already connected to the USB hub, and thus would not also connect to the hub "via the first USB port."

Claim 13 also makes clear that the disputed limitations should recite connections to the "USB ***host***," rather than the "USB ***hub***." (Ex. 40 ¶¶ 24-26.) Both disputed limitations describe connections that facilitate communications with the "USB host": the first limitation provides "bidirectional initiation of communication ***between the USB host and the consumer device*** when the consumer device is determined to be in the USB host mode," and the second limitation causes the consumer device to "only respond to ***communications initiated by the USB host***

when the consumer device is determined to be in USB device mode." But the disputed limitations only recite connecting the consumer device to the USB ***hub***; it is thus obvious that they should instead recite connecting the consumer device to the USB ***host***. This correction also aligns with the preamble because, as corrected, the disputed limitations would recite connecting the consumer device and host via their respective ports: "connecting the consumer device via the second USB port to the USB ***host*** via the first USB port."

The correction from "USB hub" to "USB host" is also consistent with the remaining claims in the '420 patent, the specification, and the prosecution history and thus is not subject to reasonable debate. (Ex. 40 ¶¶ 26-29.)

First, claim 13 is the only claim of the '420 patent that describes facilitating communication between the host and consumer device by connecting the consumer device to the USB ***hub*** (versus the USB ***host***). All the other claims provide for such communication by connecting the "first USB port," connected to the USB ***host***, to the "second USB port," connected to the consumer device—confirming that claim 13 is erroneous. (Ex. 40 ¶ 26.)

Second, the specification explains that "where the consumer device is acting as a USB Device, signals are routed normally through a USB Hub ***to the Head Unit [a vehicle's embedded USB Host]***," and "where the consumer device is acting as a USB Host, signals between the consumer device and the vehicle's embedded USB Host are routed and processed through a USB Host to Host Bridge which is connected to the USB Hub, ***thereby rendering the consumer device compatible with the vehicle's embedded USB Host***." ('037 Patent at 4:22-30, 4:36-37.)[4] Consistent with the express requirements of claim 13, the specification explains that a purpose of

[4] The specifications for the '037, '420, '072, and '643 patents are materially the same in relevant respects, so Aptiv cites to the '037 patent specification throughout for convenience.

the claimed invention is to facilitate connections between the consumer device and the USB ***host***, wherein the signals are routed differently depending on whether the consumer device is in host or device mode. It is thus clear that claim 13—which only recites connections between the consumer device and the USB ***hub***—is wrong and must be corrected to recite connections between the consumer device and the USB ***host***. (Ex. 40 ¶¶ 27-29.)

Indeed, Microchip sought and obtained an analogous correction in the parties' prior litigation: the Court corrected "USB device" to "USB hub," because the patentee clearly meant to claim that the "second host device is … connected to the USB ***hub***," rather than the USB device. *See Microchip Tech. Inc. v. Aptiv Servs. US, LLC*, No. 17-1194-LPS-CJB, 2019 WL 2502417, at *4-5 (D. Del. Jun. 17, 2019). The correction was not subject to reasonable debate because the specification established an "association between 'USB device' and 'USB hub.'" *Id.* The same logic applies here, warranting correction of "USB hub" to "USB host."

Third, during prosecution, the examiner stated that the primary reason for allowance was "that [the] prior arts don't teach a peripheral device to communicate with a USB hub bi-directionally in a first mode and to communicate with the hub only uni-directionally in a second mode wherein the device is only able to respond, and ***wherein a respective path between the device and host is taken for each mode***." (D.I. 116-1, Ex. 7 at APTIV_10000843-844 (emphasis added).) In other words, the examiner recognized that, in the claimed invention, the consumer device must connect to the USB ***host***, not just the USB hub.

2. Defendant's Answering Position

The Court should apply the plain and ordinary meaning to "connecting the consumer device … to the USB hub" as these terms are used in claim 13 of the '420 patent. Redrafting these limitations as proposed by Aptiv would substantively change the claimed structure. This redrafting would be improper given (i) there is no error "evident from the face of the patent" and

(ii) furthermore, Aptiv's proposed correction is "subject to reasonable debate." *Grp. One, Ltd. v. Hallmark Cards, Inc.*, 407 F.3d 1297, 1303 (Fed. Cir. 2005) (citation and quotation marks omitted).

a. No error is evident from the face of the patent.

There is no obvious error with connecting the consumer device to the USB hub. Claim 13 recites an operable configuration, as depicted below. (Ex. 48 ¶¶51-53.) The claim's preamble recites "a **USB hub** configured to be interconnected to the **first USB port** connected to a **USB host**." The disputed limitations recite "connecting the **consumer device** via the **second USB port** to the **USB hub** via the **first USB port**" through (1) "the **USB routing switch** and the **USB bridge**" when the consumer device is in host mode, and (2) "the **USB routing switch** and the **USB hub**" when the consumer device is in device mode.

Host Mode

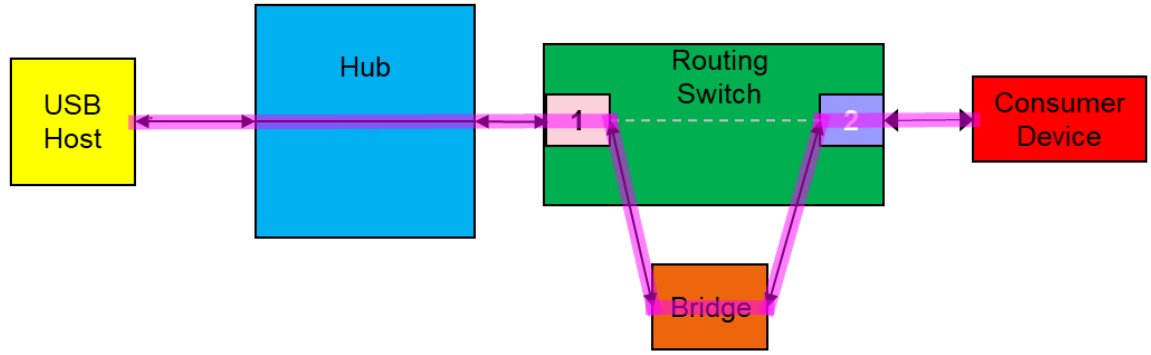

Device Mode

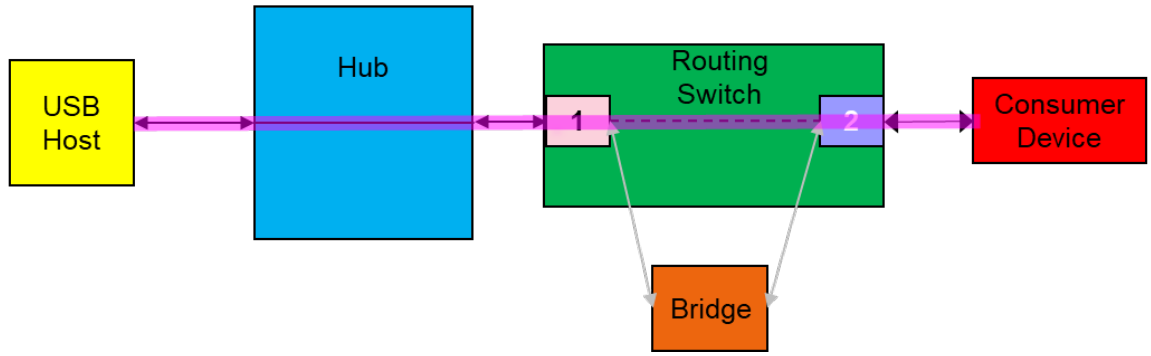

Aptiv has not disputed that this is an operable configuration.

b. Aptiv's arguments for correction fail.

Aptiv argues that claim 13 does not make sense as written, because "the '**second USB port**' is already connected to the **USB hub**, and thus would not also connect to the hub via [another port *i.e.*,] the **first USB port**." (*See supra* p. 4 (Opening).) But the embodiment shown in Figure 4 shows such a connection: the **second USB port** is connected to the **USB hub** via another port ("**Down[n] PHY port**"). (Ex. 48 ¶¶54-55; '420 patent, 5:58-66.)

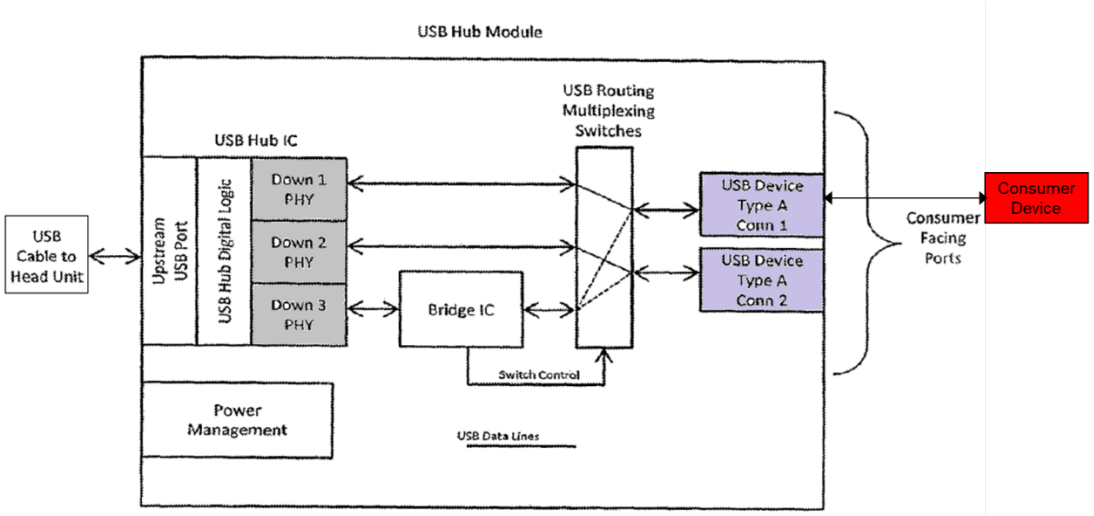

'420 patent, Fig. 4 (annotated)

Aptiv does not argue that connecting via the first USB port instead is improper. Aptiv merely wants to change the claims in an effort to read on the accused devices. *SRI Int'l v. Matsushita Elec. Corp. of Am.*, 775 F.2d 1107, 1118 (Fed. Cir. 1985) (claim is construed "not in light of the accused device").

Aptiv suggests that it should get a correction because Microchip did in the parties' previous litigation. That is irrelevant. There, the Court construed "USB device" as "USB hub" because the at-issue patent did not claim those as distinct components, but rather regularly used the phrase "USB hub device," creating an "association" between them. *Microchip Tech. Inc.*,

2019 WL 2502417, at *5. Here, the '420 patent consistently refers to the "USB hub" and "USB host" as distinct components, and they appear separately in the claims. (Ex. 48 ¶59.)

Finally, Aptiv's argument that its requested correction is "consistent with the remaining claims in the '420 patent, the specification, and the prosecution history" rests on the incorrect premise that claim 13 recites no connection between the **USB host** and **consumer device**. (*See supra* p. 5 (Opening).) But it does, through the **USB hub**: "a **USB hub** configured to be interconnected to [(1)] a first USB port connected to a **USB host** and [(2)] a second USB port connected to a **consumer device**." (Ex. 48 ¶¶56-58.)[5] And even if it did not, "the inclusion of [a] limitation in one claim does not necessitate, or even fairly indicate, that the limitation should be included in all other claims." *H-W Tech., L.C.*, 758 F.3d at 1333 (declining to add missing limitation to claim despite other claims containing it). Further, the examiner's reason for allowance does not change the result. *Id.* at 1334 ("evidence of error in the prosecution history alone insufficient to allow the district court to correct the error"); *Grp. One*, 407 F.3d at 1303 (declining to add missing language required by examiner as condition for allowance). Claim 13's intentionally different language should not be re-written to be the same as other claims.

3. Plaintiff's Reply Position

The errors in claim 13 would have been obvious to a POSITA based on the rest of the claim language because uncorrected claim 13 recites connecting the "second USB port" to the "USB hub" twice and never recites connecting the "second USB port" to the "USB host"—which is what facilitates the communication between the USB host and consumer device at the heart of the claim. (*See supra* pp. 3-5 (Opening).) The correction is further supported by the

[5] Aptiv argues that its correction also "aligns with the preamble because, as corrected, the disputed limitations would recite connecting the consumer device and host via their respective ports." (*See supra* p. 5 (Opening).) But the claim language, as written, already recites that.

remaining claims of the '420 Patent, the specification, and the prosecution history. (*See supra* pp. 5-6 (Opening).)[6] Microchip does not grapple with this core deficiency of the uncorrected claim. ***First***, Microchip asserts that claim 13 describes an operable configuration:

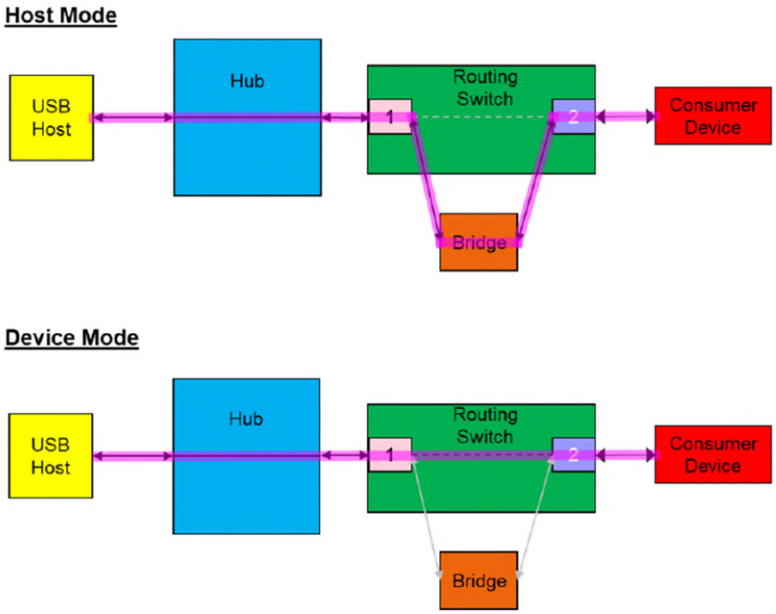

(*See supra* pp. 7-8 (Resp.).) Not so. Claim 13 requires "a USB ***routing switch interconnected to*** the USB bridge, the USB hub, and ***the second USB port***." Microchip's expert concedes that if A is interconnected to B, A cannot be within B. (*See infra* p. 23 (Resp.); Ex. 43 at 52:4-21.) Thus, the claimed "second USB port" cannot be within the "routing switch" that it is "interconnected to"—as shown above.

Also, a POSITA would not recognize Microchip's supposed "routing switch" as a routing switch. (Ex. 47 ¶¶ 2-3.) A routing switch connects one input point to each of multiple output

[6] Contrary to Microchip's suggestion (*see supra* pp. 8-9 (Resp.)), the limitations present in the other claims of the '420 patent and examiner's reasons for allowance are additional (not the only) reasons why the error is "not subject to reasonable debate based on consideration of the claim language and the specification" and "the prosecution history does not suggest a different interpretation of the claims." *See Novo Indus. L.P. v. Micro Molds Corp.*, 350 F.3d 1348, 1354 (Fed. Cir. 2003).

points (or vice versa), or connects each of multiple input points to each of multiple output points (or vice versa). (*Id.*) For example, Figure 4 shows several paths provided by the routing switch between the consumer facing ports (two input points) and the bridge and Hub IC (three output points):

Figure 4

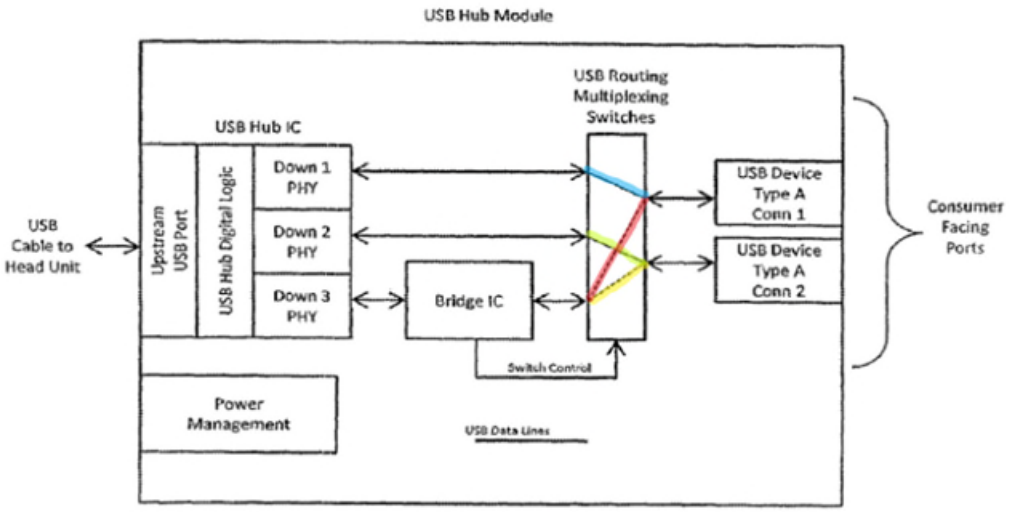

(Ex. 47 ¶ 3.) In contrast, Microchip's configuration always connects the same input point (first USB port) to the same output point (second USB port):

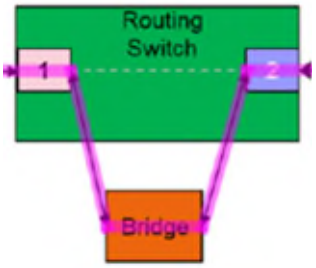

Indeed, Microchip's expert testified that he did not have a "general understanding of the term 'routing switch' outside the context of the [asserted] patents" (Ex. 43 at 79:24-80:5), and the patents do not show or describe a routing switch with Microchip's structure (*id.* at 80:6-82:18).

Second, Microchip argues that Figure 4 depicts "connecting the consumer device via the second USB port to the USB hub ***via the first USB port***" as stated in uncorrected claim 13. (*See supra* p. 7 (Resp.).) That is wrong. Microchip's expert admitted that Figure 4 does ***not*** depict the configuration of claim 13 ***as drafted***; it depicts ***corrected*** claim 13. (Ex. 43 at 76:16-77:18.) That is because uncorrected claim 13 requires the consumer device to be connected to the hub via ***the same first USB port*** when routed through the bridge (in host mode) and bypassing the bridge (in device mode). In Figure 4 (annotated below), the consumer device is connected to the hub via a different Down PHY port (what Microchip identifies as the "first USB port") when in host and device mode:

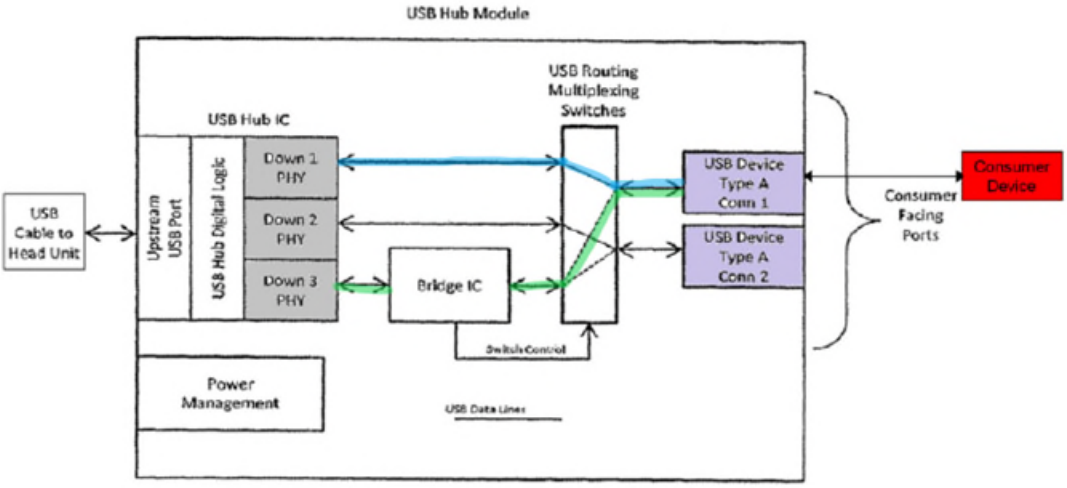

Third, Microchip argues that claim 13 is not clearly erroneous because the preamble recites a connection between the host and consumer device (through the hub). (*See supra* pp. 8-9 (Resp.).) This statement does not address the alternate connection paths that allow the host to communicate with the consumer device in host or device mode. Those paths are described in the disputed limitations—which are clearly erroneous because, although they recite providing communication between the consumer device and ***host***, the only paths described are between the consumer device and ***hub***.

4. Defendant's Sur-Reply Position

Aptiv points to no obvious error in claim 13. As-written claim 13 achieves the '420 patent's goal of providing alternative paths from consumer device to host by reciting: (a) "connecting the consumer device … to the USB hub" either "through the USB routing switch and the USB bridge" or "through the USB routing switch … bypassing the bridge" and (b) that the "USB hub [is] interconnected … to a USB host." (*See supra* p. 9 (Resp.).) As Aptiv concedes, the Court cannot re-write claim 13 unless Aptiv's proposed correction is not "subject to reasonable debate." (*See supra* p. 4 (Opening).) But Aptiv's arguments are all subject to reasonable debate.

First, Aptiv argues that the configuration in Microchip's Response contradicts claim 13's preamble, which requires "a USB routing switch interconnected to … the second USB port." But revising that configuration slightly to move the "second USB port" outside the routing switch addresses this issue. (Ex. 53 ¶1.) The revised configuration embodying claim 13 as written is equally operable. (*Id.*)

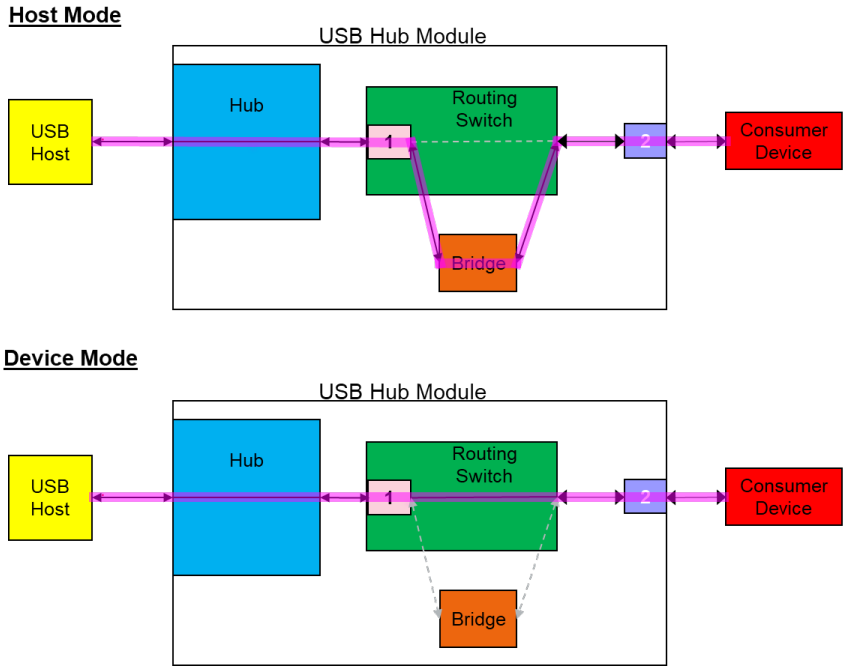

Aptiv also contends that the routing switch of the as-written embodiment is not proper, because it "connects the same input point … to the same output point." (*See supra* p.11 (Reply).) But "routing switches" have no such requirement. For instance, just like the configuration above, the prior art switch ("USB MUX") depicted below has one input and one output—indicated by red arrows—and conditionally routes signals to a bridge:

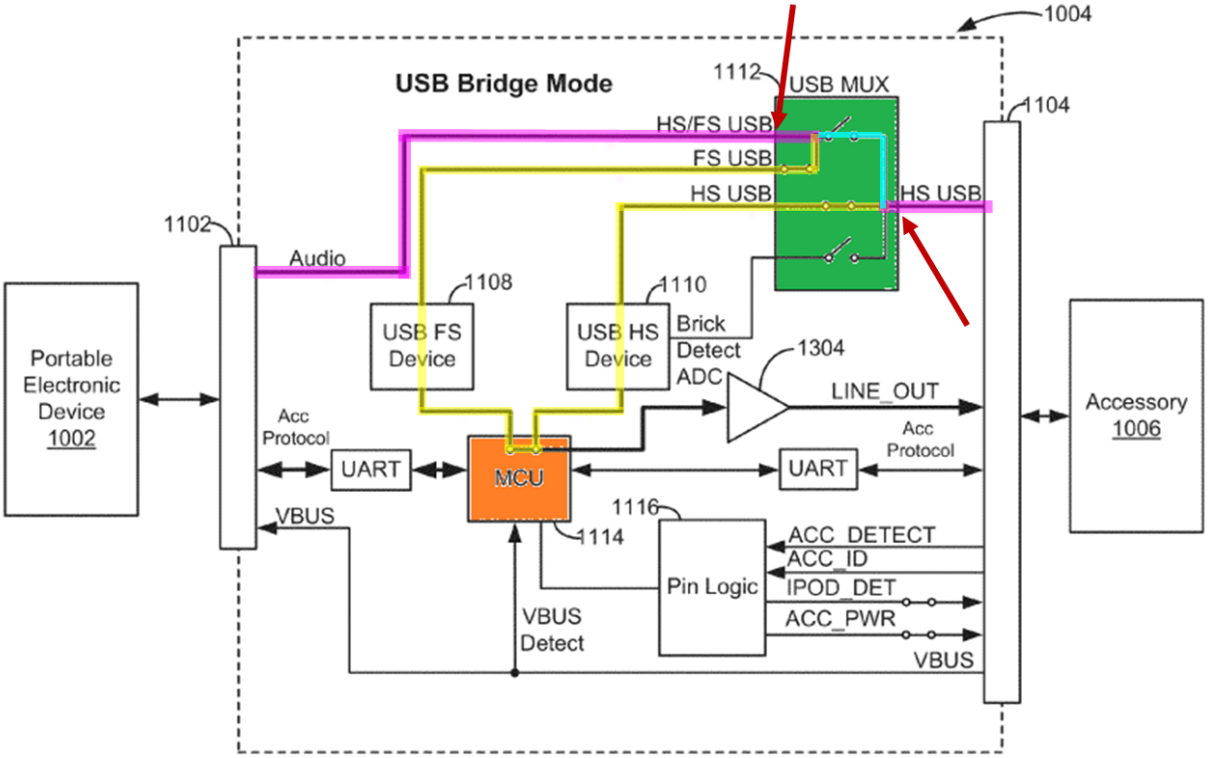

Fig. 12

(Ex. 54 (annotated); Ex. 53 ¶¶5-6.)

Second, Aptiv incorrectly argues that because the as-written embodiment differs from Figure 4, it must be incorrect.[7] (*See supra* p.12 (Reply).) Not so. The specification explains that the drawings are "***not intended to limit*** the invention to that as illustrated." ('420 patent, 5:45

[7] Microchip does not argue that Figure 4 depicts connections "as stated in uncorrected claim 13" or that the Down PHY port is the "first USB port." (*See supra* p. 12 (Reply).)

(emphasis added).) It is reasonable to infer that the patentee deliberately recited in claim 13 a structure not depicted in Figure 4. *See Teleflex, Inc. v. Ficosa N. Am. Corp.*, 299 F.3d 1313, 1327-28 (Fed. Cir. 2002) (invention should not be limited to preferred embodiments).

Third, Aptiv argues that the as-written claim language does not recite "alternate connection paths that allow the host to communicate with the consumer device in host or device mode." (*See supra* p. 12 (Reply).) But Terms 1 and 2 recite the same alternative paths as shown in Aptiv's annotation of Figure 4 below. *See infra* p. 28 (Reply); Ex. 53 ¶¶2-3.)[8]

Figure 4

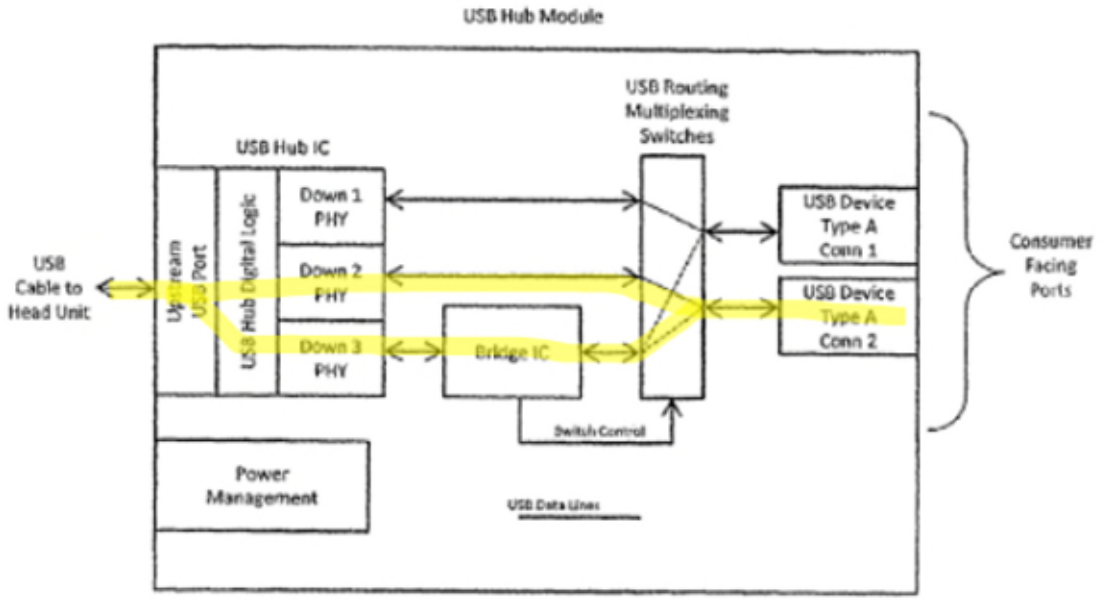

Aptiv has not met its burden to establish any obvious error.

[8] While Aptiv argues that "claim 13 recites connecting the 'second USB port' to the 'USB hub' twice" (*See supra* p. 9), both alternative paths undisputedly require connecting the second USB port to the hub. (Ex. 53 ¶4; Andrews, 42:3-11.)

B. Term No. 5: "Having" and Being "Connected to" the Same Plurality of Ports

No.	Claim Term	Plaintiff's Proposed Construction	Defendant's Proposed Construction
5	"a USB Hub having a plurality of USB Ports and interconnected to the embedded USB Host system . . . a USB routing switch interconnected to the USB Bridge, the USB Hub, and the plurality of USB Ports, wherein the USB routing switch is configured to connect a first USB Port of the plurality of USB Ports to the USB Hub through the USB Bridge . . . , and wherein the USB routing switch is configured to connect the first USB Port directly to the USB Hub . . . " '037 patent, claim 1. "providing a USB hub having a plurality of USB ports interconnected to the USB host . . . automatically configuring the USB routing switch to connect a first USB Port of the plurality of USB ports to the USB hub through the USB bridge . . . ; and automatically configuring the USB routing switch to initiate bidirectional communication with the USB host, wherein the USB routing switch is configured to connect the first USB port directly to the USB hub . . . " '899 patent, claim 1.	Not indefinite	Indefinite

1. Plaintiff's Opening Position

Microchip asserts that the lengthy phrases above are indefinite. Based on the parties' discussions, Microchip argues that a POSITA would not know what it means for a USB hub to "have" a plurality of USB ports and thus would not understand the scope of these claim terms.

"[A] patent is invalid for indefiniteness if its claims, read in light of the specification delineating the patent, and the prosecution history, fail to inform, with reasonable certainty, those skilled in the art about the scope of the invention." *Nautilus, Inc. v. Biosig Instruments, Inc.*, 572 U.S. 898, 901 (2014). Microchip bears the burden of proving indefiniteness by clear and convincing evidence. *Microsoft Corp. v. I4I Ltd. P'ship*, 564 U.S. 91, 95 (2011). Microchip cannot do so.

There is nothing ambiguous about the phrase "a USB hub having a plurality of USB ports." "Having," which is the present participle of "have," is a common word with a well understood meaning. As relevant here, "having" means possessing. (*See* Ex. 40 ¶ 36, Ex. C (definition 1a).)

That makes perfect sense given the relationship between a USB hub and USB ports. As explained in the '037 patent specification, "USB Hubs allow a single USB Host to connect to multiple USB Devices over a single cable between the USB Host and the USB Hub." ('037 patent at 1:66-2:1.) This is illustrated in Figure 1, which shows a "USB Hub having a plurality of USB ports connect[ed] to a plurality of USB Devices (via a plurality of consumer-facing USB ports)":

Figure 1

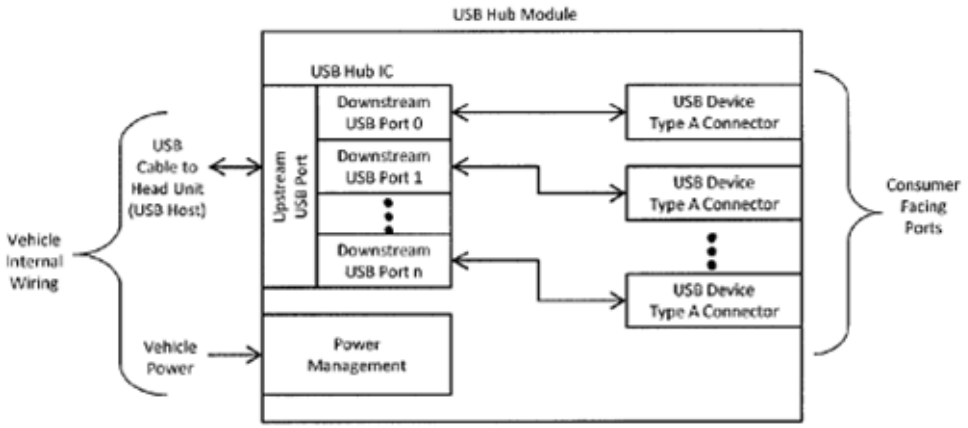

The USB hub "has" (*i.e.*, possesses) the ports labeled "Downstream USB Port 0" through "Port n," as well as the consumer facing ports that are further downstream, because the hub connects each of those ports to the bus: the hub allows the USB host to connect to the USB devices through each downstream port, regardless of whether the port is part of the hub or further downstream. (Ex. 40 ¶¶ 46-47.)

That is also consistent with the USB Specification Revision 2.0 (the "USB Specification"), which sets forth the requirements of a USB 2.0 system. (Ex. 40 ¶¶ 15-16, Ex. B.) The USB Specification defines a hub as "[a] USB device that provides additional connections to the USB [Universal Serial Bus]." (*Id.*, Ex. B at 6.) More specifically, it explains:

> Hubs are wiring concentrators and enable the multiple attachment characteristics of the USB. Attachment points are referred to as ports. Each hub converts a single attachment point into multiple attachment points….***Each of the downstream ports <u>of a hub</u> allows connection to another hub or function. Hubs can detect attach and detach at each downstream port and enable the distribution of power to downstream devices.***

(*Id.*, Ex. B at 22 (emphasis added).) In other words, the "downstream ports" that the hub connects to the bus (which in turn connect to additional devices), are ports "***of*** a hub"—*i.e.*, they are ports possessed by the hub. (*Id.* ¶¶ 37-40.)

This is further illustrated by the USB Specification's example of hubs operating in a typical desktop computer environment:

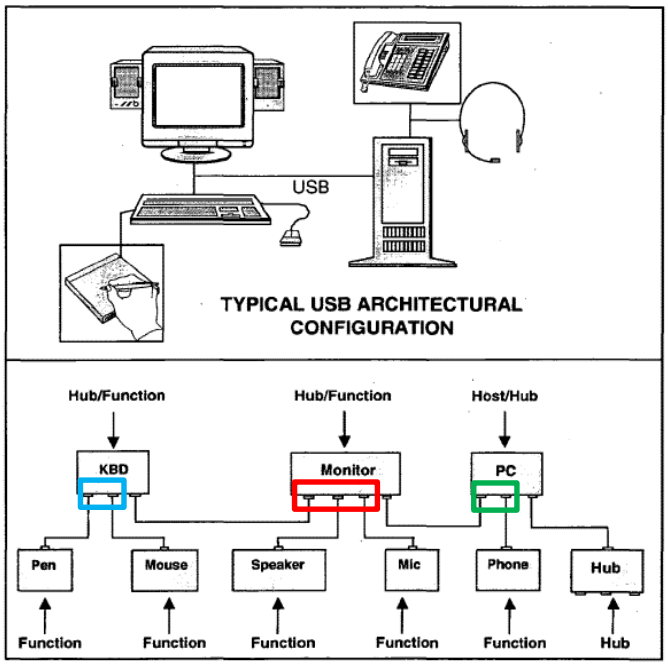

Figure 4-4. Hubs in a Desktop Computer Environment

(*Id.*, Ex. B at 23 (annotated).)

The PC contains both the USB host and a hub, which is further connected to additional downstream hubs in the monitor and keyboard. The PC hub, monitor hub, and keyboard hub each comprise downstream attachment points (in the green, red, and blue boxes, respectively). Per the excerpt above, those attachment points are downstream ports that allow connection to another USB device. (*Id.*, Ex. B at 22.) Each hub connects all of the devices downstream of that hub to the PC host: the keyboard hub connects the pen and mouse; the monitor hub connects the speaker and mic, as well as the keyboard, pen, and mouse; and the PC hub connects the phone, monitor, speaker, mic, keyboard, pen, and mouse. The downstream ports that allow for the connections provided by each hub are all ports "of" the hub (*i.e.*, ports the hub "has"), whether those ports are part of the hub or not: the keyboard hub has the ports in the blue box; the monitor hub has the ports in the red and blue boxes; and the PC hub has the ports in the red, blue, and green boxes. (*Id.* ¶¶ 41-45.)

2. Defendant's Answering Position

All independent claims of the '037 and '899 patents are indefinite because they recite a USB hub that both (a) ***has*** (*i.e.*, includes as parts) a "first USB port" and (b) is ***connected*** to that same port—something that Aptiv itself argued during prosecution is nonsensical. *See WSOU Invs. LLC v. Google LLC*, No. 2022-1066, 2023 WL 6210607, at *7 (Fed. Cir. Sept. 25, 2023) ("One circumstance in which claims are indefinite is where the claims, as properly construed, are nonsensical.") (citation omitted). The Court should reject Aptiv's attempt to salvage the claims by interpreting the word "having" to encompass "not being a part of but being connected to"—contrary to its plain meaning and common sense. (*See supra* p. 18 (Opening); *WSOU*, 2023 WL 6210607, at *8 (declining to redraft limitation to include language to avoid a nonsensical result).)

a. The plain meaning of "having" is "including as part of another."

Under black letter patent law, "having" is a "transitional phrase" that, while it may include "unrecited additional components," nonetheless relates to the ***components*** of a claimed item. MPEP[9] § 2111.03; *see also Lampi Corp. v. Am. Power Prods. Inc.*, 228 F.3d 1365, 1376 (Fed. Cir. 2000) ("having" can include other components in addition to those recited).

Aptiv's patents use "having" the same way. Every relevant use of "having" in the specification refers to ***including*** a component as a part of another. (*See, e.g.*, '037 patent, 4:33-34 (one embodiment "comprises a USB Hub Module having a USB Hub, USB Bridge, and USB routing switches"), 5:51-53 ("self-powered USB Hub Module having a USB, a USB Bridge, and a switching device"); Ex. 48 ¶¶72-73.) When discussing Figure 4, the specification largely tracks the language in the claims ("a USB hub ***having*** a plurality of USB Ports") but uses the

[9] The MPEP is published to provide patent examiners and attorneys with a "reference work on the practices and procedures relative to the prosecution of patent applications," including claim interpretation. MPEP Foreword.

word "including" in place of "having": "[t]he USB Hub . . . ***includes*** a plurality of downstream USB ports." ('037 patent, 5:58-60 (emphasis added).) Thus, the specification confirms Microchip's position. Aptiv elsewhere agrees that "including" does not encompass "interconnected to" (Opening Br., 5 (proposing to re-write "including" to "interconnected")) but fails to explain why "having" should.

Even Aptiv's own dictionary confirms that "having" requires "being a part of." The definition on which Aptiv relies—"to hold or maintain as a possession, privilege, or entitlement"—is irrelevant since it relates to ownership. (*See infra* p. 29 (Opening) (citing Ex. C to Ex. 40 (Andrews Decl.) at 1a); Ex. 48 ¶¶74-75.) The same dictionary confirms that, as to structures, "having" means "to hold, include, or contain ***as a part***." (Ex. C to Ex. 40 (Andrews Decl.) at 1c (emphasis added); *see also* Exs. 49-50.) This definition applies here.

b. The '037 and '899 patent claims are nonsensical under the plain meaning of "having."

The disputed claims recite:

[1] "a **USB hub** ***having*** a plurality of USB Ports";

[2] "a USB routing switch interconnected to the USB Bridge, the USB Hub, and the plurality of USB Ports, wherein the USB routing switch is configured to ***connect*** a first USB Port of the plurality of USB Ports to the **USB Hub** through the USB Bridge" when a consumer device is in host mode.

By using the word "having," limitation [1] indicates that the "plurality of USB ports" refers to components that are a ***part of*** the USB hub, *e.g.*, the internal USB hub ports ("**Down PHY**" below). (Ex. 48 ¶¶69-70; Ex. 49 at 840 ("have" means "hold, include, or contain as a part or whole"); Ex. 50 at 1039 ("have" means "contain, include").)

In contrast, limitation [2] indicates that the "plurality of USB ports" refers to components that are ***separate from***, but linked to, the USB hub, *e.g.*, the physical ports to which downstream

consumer devices are connected ("**Consumer Facing Ports**" below). (Ex. 48 ¶71; Ex. 49 at 383 ("connected" means "joined or linked together").)

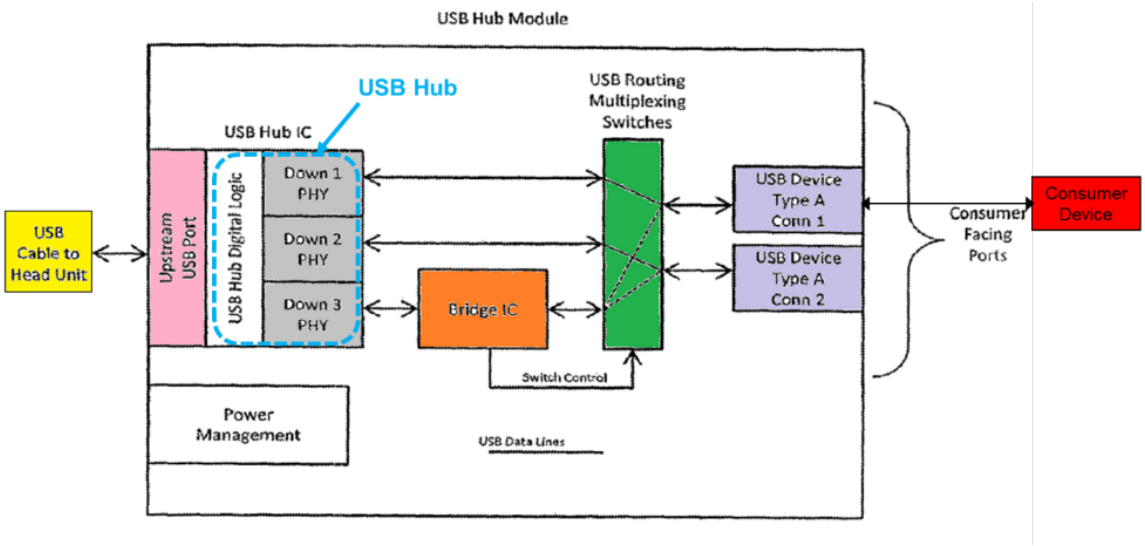

'037 patent, Fig. 4 (annotated)

The problem is that the claims require (a) the "plurality of ports" in limitations [1] and [2] to be one and the same and (b) the hub both "have" and also "connect" to the "plurality of ports." A POSITA would have understood that components that are part of the USB hub (as limitation [1] requires) cannot also be connected to it (as limitation [2] requires). (Ex. 48 ¶¶76-77.) The patentee has already agreed with this—albeit when negatively addressing a Microchip patent. There, Aptiv distinguished Microchip prior art on the basis that "it [is] ***not logical*** that [Component A] and [Component B] can be ***components of*** the USB switching hub 119 that are contained within USB switching hub 119 and at the very same time be ***interconnected to*** the same USB switching hub 119." (D.I. 116-1, Ex. 11 at 5 (emphasis added).) The claims here are similarly illogical, and are thus indefinite. *See WSOU*, 2023 WL 6210607, at *7 ("self-contradictory language of ["second part in between the first part and the second part"] limitation renders the claims indefinite").

c. Aptiv's attempt to interpret "having" to include "connected" fails.

Aptiv contends that there is "nothing ambiguous" about the claims because "'having' means possessing." (*See supra* p. 17 (Opening).) But, in reality, Aptiv seeks to interpret the word contrary to its ordinary meaning—to argue that the hub can "have" (*i.e.*, possess) both (a) ports that are a ***part*** of the hub (as limitation [1] requires) and (b) ports that are merely ***connected to*** the hub (as limitation [2] requires). (*See supra* p. 18 (Opening) ("USB hub 'has' . . . the consumer facing ports . . . regardless of whether the port is part of the hub"); Ex. 40 ¶ 38 ("A USB hub can also 'have' USB ports that . . . are not themselves part of the hub but are still connected to the bus by the hub.").)

Different from its current position, in its infringement contentions, Aptiv replaced the word "having" in limitation [1] with the word "interconnected to," and argued in a footnote that "having" means "inter-connected to":

A USB Hub [inter-connected to][1] a plurality of USB Ports and inter-connected to the embedded USB Host system

[1] Although claim 1 states "A USB Hub ***having*** a plurality of USB Ports," a POSA would understand from the surrounding claim language and patent specification that claim 1 should read instead "a USB hub ***inter-connected to*** a plurality of USB Ports."

(Ex. 51 at 4 (emphasis in original).) [10]

Both of Aptiv's attempts to re-write the claims are improper. *Synchronoss Techs., Inc. v. Dropbox, Inc.*, 987 F.3d 1358, 1366-67 (Fed. Cir. 2021) (not construing "comprising" to avoid

[10] It is unclear whether Aptiv intended to correct the claim or merely construe "having" through its bracketed terms. Regardless, Aptiv argued "having" means "interconnected to."

indefiniteness since that would be improper claim rewriting). Aptiv's re-write is inconsistent with the term's ordinary meaning and Aptiv's own extrinsic evidence—discussed above.[11]

The re-write also conflicts with the intrinsic record, which confirms that "having" means something different from "interconnected to." (Ex. 48 ¶81.) Claim 1 in both the '037 and '899 patents recites "a USB Hub ***having*** a plurality of USB Ports and ***interconnected to*** the embedded USB Host system." The '037 specification similarly uses the terms to mean different things. (*See, e.g.*, '037 patent, 2:4-5 ("self-powered USB Hub ***having*** a plurality of USB ports ***connects to*** a plurality of USB Devices") (emphasis added).) These "[d]ifferent claim terms are presumed to have different meanings." *Bd. of Regents of the Univ. of Tex. Sys. v. BENQ Am. Corp.*, 533 F.3d 1362, 1371 (Fed. Cir. 2008).

Aptiv's citation to a discussion of Figure 1 only illustrates the non-sensibility of Aptiv's position. (*See supra* p. 17 (Opening).) The specification states that Figure 1 illustrates "a self-powered USB Hub ***having*** a plurality of **USB ports** ***connects*** to a plurality of USB Devices (via a plurality of **consumer-facing USB ports**)." ('420 patent, 2:4-7 (emphasis added).) Aptiv argues that this language means that the "USB hub 'has' (*i.e.*, possesses) . . . the **consumer facing ports**." (*See supra* p. 18 (Opening).)

[11] While Aptiv discusses "connect[ions]" to ***other hubs and devices*** (*see supra* p. 19), those connections are irrelevant. What is claimed is a connection of the hub to ***itself*** (since the "first USB port" is part of the "USB Hub"). Aptiv does not dispute that this does not make sense.

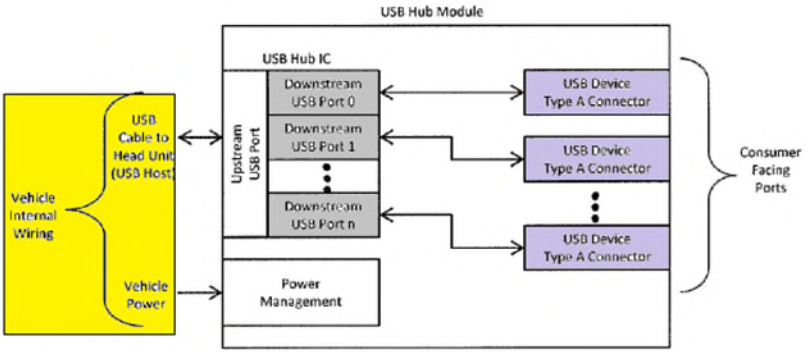

’037 patent, Fig. 1 (annotated)

As an initial matter, this passage is inapposite since Figure 1 illustrates a prior art hub module (not the claimed invention). In any event, by Aptiv’s logic, the USB hub would also “have” (a) the USB Devices that are connected to the hub via the Consumer Facing Ports and (b) even the vehicle, that is connected to the hub via the vehicle’s Head Unit (in yellow). (Ex. 48 ¶82.) Such a reading of “having” is nonsensical. (*Id.*)

Finally, Aptiv’s extrinsic evidence stands for the unremarkable position that a USB hub ***module*** can have downstream ports. (*See supra* pp. 18-19 (Opening).) But, as discussed above, the patents use the term “USB hub” to refer to a component of the “USB hub module.” That the USB hub module (in the red box) can “have” (*i.e.*, include) the Consumer Facing Ports (in purple) does not change the fact that the claimed USB hub (in blue) cannot “have” those ports. (Ex. 48 ¶¶78-80.)

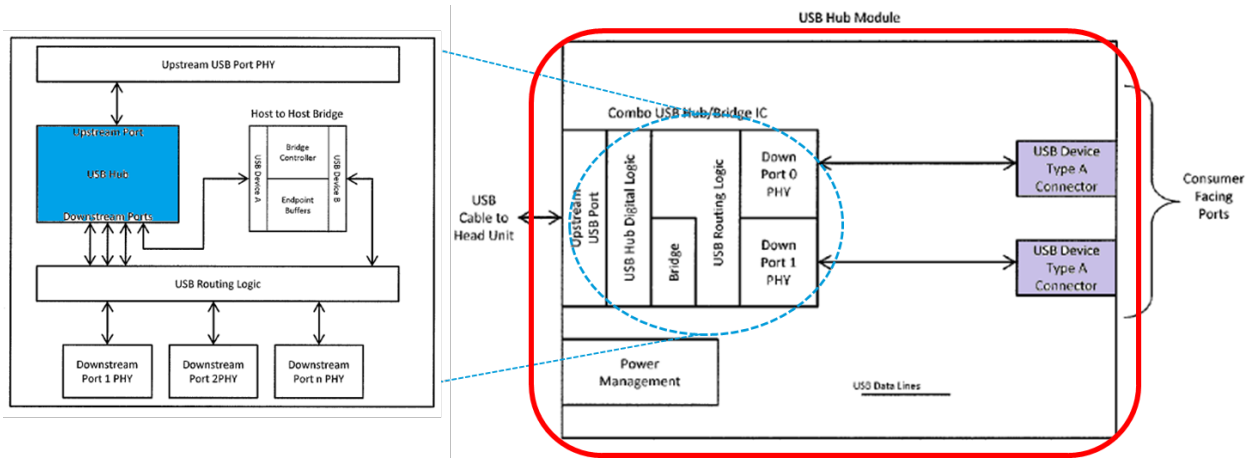

’420 patent, Figs. 5, 6

d. Aptiv fails to explain why its correction should be selected over others.

The issues with the disputed claims could be affected by revising limitation [1] in a variety of ways:

(a) to refer to “USB hub module” instead of “USB hub”—so that the claim would encompass a hub module that includes both the Down PHY ports and Consumer Facing Ports;

(b) to refer to a “first” plurality of ports (Down PHY ports) and limitation [2] to refer to a “second” plurality of ports (Consumer Facing Ports)—so that the claim would encompass the hub and the Down PHY and Consumer Facing Ports; or

(c) to say “interconnected to” instead of “having”—as Aptiv proposed in footnote 1 of its infringement contentions—such that the claim would encompass just the hub and the Consumer Facing Ports.

Although each of these corrections cures the indefiniteness issue, each would result in a respectively different structure and claim scope. (Ex. 48 ¶83.) Since the Court “cannot know what correction is necessarily appropriate or how the claim should be interpreted,” the Court “must hold the disputed claims invalid for indefiniteness.” *Novo Indus.*, 350 F.3d at 1358.

3. Plaintiff’s Reply Position

Microchip bears the burden to show, by clear and convincing evidence, that a POSITA would not understand the scope of these claim terms with reasonable certainty. Microchip

argues that the phrase "a USB Hub having a plurality of USB Ports" must refer to a USB hub with USB ports on the hub itself, and cannot mean a hub that has (i.e., possesses) ports further downstream of the hub. It is undisputed that Microchip's position is at odds with the claim language and the specification; indeed, Microchip's nonsensical view of the claim terms is what serves as the basis for its indefiniteness position. This approach turns the indefiniteness inquiry on its head: Microchip ignores the ***intrinsic evidence*** showing that the "plurality of USB Ports" are the ports further downstream of the hub and argues instead, based on ***extrinsic evidence***, that the ports must be on the hub—which then renders the claims indefinite.

The intrinsic evidence, including the claim terms and specification, makes clear that "having" includes "possessing" such that the "plurality of USB Ports" are the ports downstream of (not on) the hub. Both disputed limitations require one of the "plurality of USB Ports" to connect to the USB hub, either "directly" or "through the USB Bridge"—meaning those are ***not*** ports on the hub. ('037 Patent, Claim 1; '899 Patent, Claim 1; *see supra* Terms 1-2 (components connected to each other cannot be within one another).)

That is further supported by the specification. Claim 1 of the '037 and '899 Patents describe two alternative paths between the consumer device and host, illustrated in Figure 4 below: the consumer device connects to the "first USB Port of the plurality of USB Ports," which is connected "to the USB Hub through the USB Bridge" when the consumer device is in host mode and "directly to the USB Hub" when the consumer device is in device mode.

Figure 4

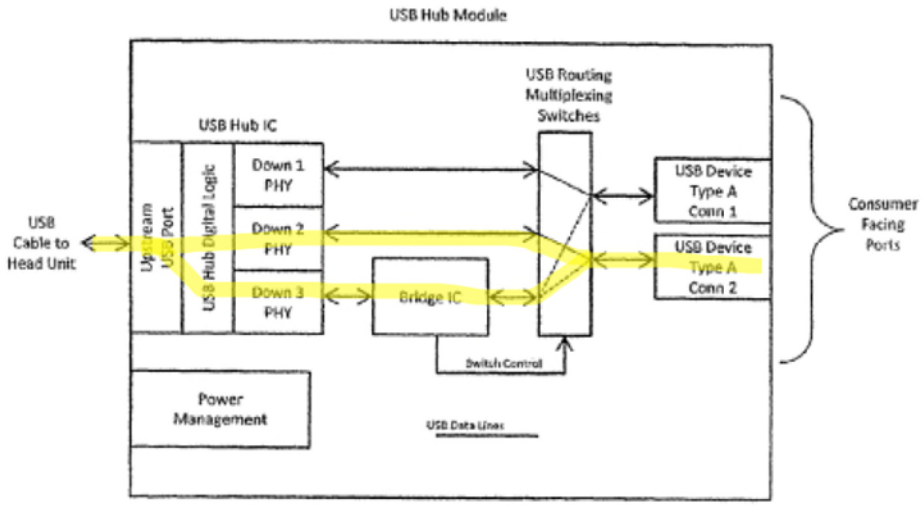

('037 Patent, Fig. 4 (annotated); Ex. 47 ¶¶ 8-9.) Therefore, the "first USB Port of the plurality of USB Ports" must be a consumer facing port; it would not make sense for the "first USB Port" to be a port on the USB hub because those ports are upstream of the bridge and thus would never be connected to the hub "through" the bridge. (*Id.*)

Contrary to this intrinsic evidence, Microchip starts from the false premise (based on extrinsic evidence) that "having" cannot mean possessing and instead must mean "including as part of another" to argue that the disputed claim terms are nonsensical. (*See supra* pp. 21-23 (Resp.).) Microchip's backwards argument should be rejected.

First, Microchip's authorities do not show that "having" must mean "including as part of another." (*See supra* pp. 21-22 (Resp.).) Rather, those authorities address an entirely different issue: whether "having" is an open term, meaning "the named elements are essential, but other elements may be added and still form a construct within the scope of the claim." *See Lampi Corp. v. Am. Power Prod., Inc.*, 228 F.3d 1365, 1376 (Fed. Cir. 2000) (finding that "'having'

must be interpreted in light of the specification to determine whether open or closed language is intended") (quoting MPEP § 2111.03).

Second, Microchip argues that the specification confirms that "having" means "including as part of another." (*See supra* pp. 21-22 (Resp.).) Microchip's specification cites are irrelevant because they do not address the disputed claim terms. The two uses of "having" Microchip cites describe a USB hub module and are silent regarding ports. (*See supra* pp. 21-22 (Resp.) (citing '037 Patent at 4:33-34 ("USB Hub Module having a USB Hub, USB Bridge, and USB routing switches"), 5:51-52 (similar)).) And Microchip's cited reference to a hub and ports uses the term "includ[ing]," not "having." (*See supra* p. 21 (Resp.).)

Third, Microchip argues that an alternative definition in Aptiv's cited dictionary confirms that "having" requires "being a part of." (*See supra* p. 21 (Resp.).) Microchip's only basis for rejecting Aptiv's definition ("to hold or maintain as a possession, privilege, or entitlement," Ex. 40, Ex. C, definition 1a)—is the bare assertion that any definition that relates to "ownership" is irrelevant. (*See supra* p. 21 (Resp.); Ex. 48 ¶ 75; Ex. 43 at 47:16-49:7.) This ignores Mr. Andrews's explanation that USB hubs specifically are understood to "have" the downstream USB ports to which they are connected. (Ex. 40 ¶¶ 38-47.)

Fourth, Microchip argues that the disputed claim terms are indefinite because Aptiv made a purportedly inconsistent statement in its infringement contentions. (*See supra* pp. 23-25 (Resp.).) Microchip cites no authority for the proposition that infringement contentions should be considered in assessing indefiniteness. Regardless, Aptiv's contentions are consistent with its position here: stating that the ports are "inter-connected to" the hub is another way of describing the same relationship between the hub and ports set forth in the claims, which make clear that the ports are those downstream of (and not part of) the hub.

Fifth, Microchip's arguments based on Figure 1 miss the mark. It does not matter that Figure 1 illustrates the prior art (*see supra* pp. 25-26 (Resp.).), because Aptiv relies on it as an example of the relationship between hubs and downstream ports in USB networks. And Microchip's argument that Aptiv's reading of "having" would mean the hub "has" the devices connected to the consumer ports and head unit is illogical (*see supra* pp. 25-26 (Resp.) (annotating Fig. 1)). Aptiv's arguments are tied to the claim terms and are based on the specific role of hubs in connecting downstream ports to the USB network; they are not about how "having" should be understood in the context of USB devices or the head unit.

Sixth, Microchip's arguments regarding the extrinsic evidence again start from the false premise that "having" must mean "including as part of another" and should be rejected for the reasons discussed above. (*See supra* p. 26 (Resp.) (arguing, based on that premise, that the consumer facing ports shown in Figure 5 of the patent specification can only be ports the hub ***module*** (not hub) "has").)[12]

Seventh, Microchip mischaracterizes the dispute as Aptiv seeking to "correct" the claims. (*See supra* pp. 23-25, 26-27.) Aptiv is not seeking correction; Microchip is arguing that the claims are indefinite—and bears the burden of proof. Microchip attempts to shift that burden to Aptiv by reframing the dispute as seeking correction and proposing strawman corrections that it argues are improper.

4. Defendant's Sur-Reply Position

The parties agree that (a) the "plurality of ports" in limitations [1] and [2] refer to the same ports (*see supra* p. 22 (Resp.); Ex. 55, 64:25-65:7); (b) limitation [2] refers to ports that are

[12] Mr. Dezmelyk asserts that a hub only receives certain information about the ports on that hub, and thus could not "have" the ports further downstream. (Ex. 48 ¶¶ 78-79.) This presumes that Microchip's definition of "have" is correct. Mr. Dezmelyk admits that a hub connects both the ports on the hub and those further downstream to the USB network. (Ex. 43 at 23:8-24:18.)

connected to (and thus cannot be part of) the hub (*see supra* pp. 21-22 (Resp.), p. 28 (Reply)); and (c) the disputed claims do not make sense if limitation [1] refers to ports that are part of the hub. (*see supra* pp. 27-28 (Reply); Ex. 55, 72:23-73:14.) The parties dispute whether Aptiv can salvage the claim by interpreting limitation [1]—inconsistent with intrinsic and extrinsic evidence—to exclude ports that are part of the hub.

Aptiv originally conceded that limitation [1] includes those ports. It argued the "hub 'has' . . . the ports labeled '**Downstream USB Port 0' through 'Port n**,' as well as the **consumer facing ports**." (*See supra* p. 18 (Opening) (color added).) It noted that the specification describes in Figure 1 a "USB Hub having a **plurality of USB ports**[13] connect[ed] to a plurality of USB Devices (via a plurality of **consumer-facing USB ports**)." (*See supra* p. 17 (Opening) (quoting '037 patent, 2:4-6).)

Figure 1

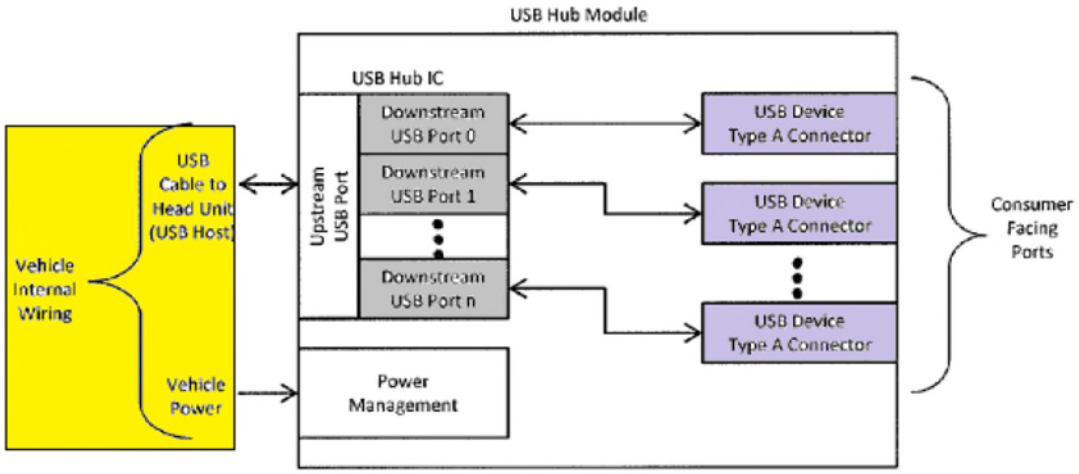

Aptiv now argues that "plurality of ports" is limited to the consumer-facing ports that are not part of the hub. (*See supra* pp. 27-28 (Reply); Ex. 55, 66:19-67:4, 69:2-12, 72:15-18.)

[13] This refers to **Downstream USB Port 0-n**—distinct from the consumer-facing ports "via" which they are connected.

The specification contradicts this new argument. Aptiv's expert admits that only one portion of the specification describes the claimed hub-port relationship. (Ex. 55, 74:16-75:17.) That portion makes clear that the "plurality of ports" in limitation [1] are the Down PHY ports of the hub—not the consumer ports. It states that the hub "***includes***[14] a plurality of downstream USB ports," one of which must be "connected to a USB Bridge." ('037 patent, 5:58-60, 7:3-4.) Figure 4 shows only a Down PHY port connected to the bridge; in contrast, "any one of the consumer USB ports can be routed to" the bridge. (*Id.*, 7:3-4; Ex. 53 ¶8.)

USB data cable between the Head Unit and USB Hub. The USB Hub also includes a plurality of downstream USB ports, at least one of which is connected to a USB Bridge (which also is preferably provided in the form of an integrated circuit (IC)). At least one downstream USB port of the USB Hub is connected to a switching device (such as USB analog multiplexing switches, for example). The

Figure 4

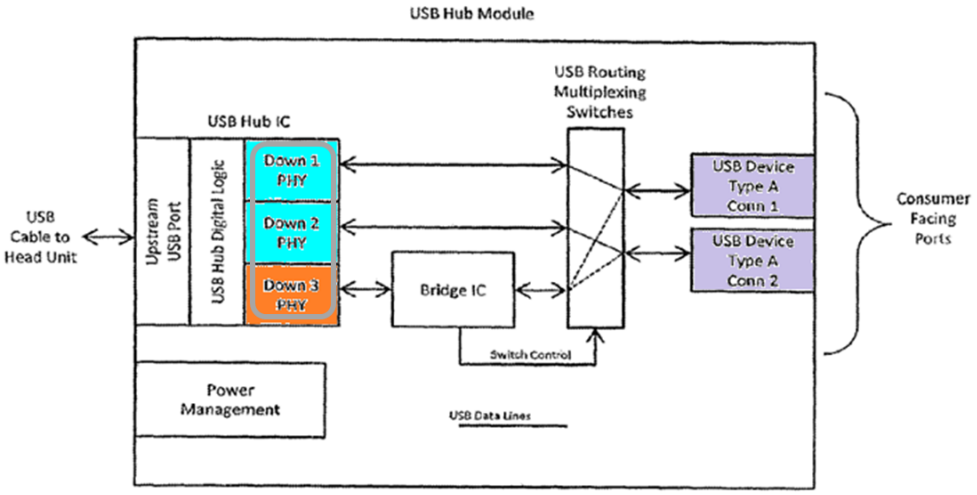

That is, nothing in the specification supports Aptiv's view that the "plurality of ports" in limitation [1] refers to the consumer-facing ports.

[14] While Aptiv now contends that "includes" also means "interconnected to" (Ex. 55, 61:5-12, 136:19-137:5), "include" means "contain . . . within." (Ex. 56.)

Aptiv relies solely on limitation [2]—which "require[s] one of the 'plurality of USB Ports' to connect to the USB hub"—to argue that the "plurality of ports" in limitation [1] must refer to ports not part of the hub. (*See supra* pp. 27 (Reply).) But the Court cannot interpret limitation [1] in a way that contradicts the specification to be consistent with limitation [2]. *See Hill-Rom Servs., Inc. v. Stryker Corp.*, 755 F.3d 1367, 1374 (Fed. Cir. 2014) ("Where the meaning of a claim term is clear, as it is here, [courts] do not rewrite the claim to preserve its validity.").

Besides being inconsistent with the specification, Aptiv's position would require the Court to interpret "have" inconsistently with its ordinary meaning. Aptiv does not dispute that Microchip's interpretation of "having" as "being part of" is more fitting for describing structures. (*See supra* pp. 21-22 (Resp.).) Aptiv does not dispute that its extrinsic evidence (*e.g.*, the USB Specification using the term "hub" to refer to a "hub module") shows that only the ***USB hub module*** (of which the hub is a part) can "have" the consumer-facing ports. (*See supra* p. 26 (Resp.); *see also supra* p. 29 (Reply).) Aptiv also does not dispute that Figure 5 (illustrating a "USB Hub Module") shows the same. Although Aptiv's expert purports to explain the opposite, his "explanation that USB hubs specifically are understood to 'have' the downstream USB ports to which they are connected" (*see supra* p. 29 (Reply)) is unsupported. He infers that a hub must "have" all ports downstream to it from one sentence in the USB 2.0 Specification; and yet the very next sentence makes clear the discussion is of downstream ports that are part of the hub. (Ex. 53 ¶9; Ex. 55, 110:10-15.) Thus, the extrinsic evidence is clear that limitation [1] requires the hub to "have" ports that are a part of it. Because limitation [2] requires those same ports to not be part of the hub, the claims are indefinite.

C. Term No. 6: "providing efficient communications among USB components of a data communication system"

No.	Claim Term	Plaintiff's Proposed Construction	Defendant's Proposed Construction
6	"providing efficient communications among USB components of a data communication system" '072 patent, claim 1.	Not definite	Indefinite

1. Plaintiff's Opening Position

Microchip suggests that the term "providing efficient communications among USB components of a data communication system" is indefinite because a POSITA would have no way of determining whether the communications in a given system are efficient. Microchip's argument presumes that the phrase requires a threshold degree of efficiency. It does not. Rather, the phrase "providing efficient communications" simply describes the intended result, *i.e.*, "efficient communications" are provided by performing the claimed "receiving" and "routing" limitations (*i.e.* the communication steps). The intrinsic and extrinsic evidence both support that conclusion.

Claim 1 is a method claim that requires performing four "receiving" and "routing" steps on a recited data communication system. It comprises five limitations: the four communications steps (*i.e.* "receiving a first USB signal…," "routing the first USB signal…," "receiving a first USB signal…," and "routing the second USB signals…"), and a limitation (containing the term at issue) requiring those steps be performed on a recited data communication system. A POSITA would understand the disputed claim language to be describing the effect of performing claim limitations, and not an additional limitation that the communications meet some threshold level of efficiency. (Andrews Decl. ¶¶ 51-52.) As the Federal Circuit has held, laudatory adjectives,

such as "efficient," describing the intended benefits of using the claimed invention, are not limiting. For example, in *Minton v. NASD, Inc.*, 336 F.3d 1373, 1381 (Fed. Cir. 2003), the court found the term "efficiently" to be non-limiting because it is a "laudatory" term "characterizing the result of the executing step." *See also In re Copaxone Consol. Cases*, 906 F.3d 1013, 1023 (Fed. Cir. 2018) (in claim requiring a "therapeutically effective regimen," "therapeutically effective" was non-limiting laudatory language where claim otherwise specified steps of claimed regimen).

The intrinsic evidence confirms that a POSITA would understand the phrase "efficient communications" to refer to the communication steps described in the receiving/routing limitations in Claim 1. ***First***, the structure of the claim makes clear that the first limitation (containing the language at issue) specifies the components of the system on which the process steps are performed, including components not recited by the proceeding process steps (for example the first and second input ports), confirming it further limits the claim. ***Second***, the specification clarifies that the recited process step limitations result in efficiencies by avoiding "the need to provide additional cabling in the vehicle." ('072 Patent at 4:7-14; *see also id.* at 1:21-28 (the claimed invention relates allowing dual role USB devices to connect to a "vehicle's embedded USB host that does not have On the Go").)

Extrinsic evidence confirms this conclusion. ***First***, there is no common metric for efficiency in the context of USB networks, so a POSITA would understand "efficient" to be a qualitative description of the communications. (Ex. 40 ¶ 48.) ***Second***, a POSITA would understand that one of the purposes of the disclosed invention was to provide an efficient solution to enabling a car's infotainment system to communicate with a phone in host mode, without the need for a second cable to the head unit or a special on-the-go "OTG" port on each

downstream USB port, and would understand the disclosed method achieves that efficiency. (*Id.* ¶¶ 49-52.)

2. Defendant's Answering Position

The "providing efficient communication" limitation does not "inform those skilled in the art about the scope of the invention with reasonable certainty." *Nautilus*, 572 U.S. at 910. Specifically, "efficient" is an indefinite term of degree, because there is no way to determine how much efficiency the claim requires. *Midwest Athletics & Sport Alliance LLC v. Ricoh USA, Inc.*, No. 2:19-cv-514-JDW, 2020 WL 6158233, at *3-4 (E.D. Pa. Oct. 21, 2020) ("substantially" was an indefinite term of degree because there was "no way to determine how much variability the claim language allows"). Aptiv agrees that "there is no common metric for efficiency in the context of USB networks." (*See supra* Section III.C.1 p. 35 (Opening).) In other words, Aptiv concedes that this term does not define the scope of the invention with reasonable certainty. (Ex. 48 ¶¶85-86.)

Instead, Aptiv argues that the entire phrase "providing efficient communications among USB components of a data communication system" should be read out of the claim. (*See supra* pp. 34-36 (Opening).) Aptiv contends that a POSITA would not understand the disputed language (contained in the first half of the first claim limitation) to be describing "an additional limitation." (*See supra* pp. 34-36 (Opening).) It argues a POSITA would understand the language to be merely "the effect of performing [separate] claim[ed] limitations." (*See supra* p. 34 (Opening).) It refers to the "communication steps" recited in the other four limitations of the claim (*i.e.*, "receiving a first USB signal…," "routing the first USB signal…," "receiving a second USB signal…," and "routing the second USB signal…"). (*See supra* pp. 34-35 (Opening).) But this proposal violates the basic tenet that the Court "must give meaning to all

the words in [the] claims." *Funai Elec. Co., Ltd. v. Daewoo Elecs. Corp.*, 616 F.3d 1357, 1372 (Fed. Cir. 2010) (quotation omitted).

In any event, the claim makes clear that the "efficient communication" term is a separate limitation. It is not included in a non-limiting preamble. *See Catalina Mktg. Int'l*, 289 F.3d at 808 ("preamble is not limiting where a patentee defines a structurally complete invention in the claim body and uses the preamble only to state a purpose or intended use for the invention") (quotation omitted). Nor is it included in a "whereby" clause to make clear that efficient communication can be achieved by performing the four recited communication steps. That is what the patentee did in *Minton v. NASD, Inc*., upon which Aptiv relies. There, the claim recited:

> A method for trading securities between individuals, comprising . . . executing a trade of the security based on information contained in the offer for consideration specified in the reply to the offer, ***whereby the security is traded efficiently*** between the first [offering] individual and the second [replying] individual . . .

336 F.3d at 1380. The Federal Circuit concluded that "[t]he district court was . . . correct in not giving weight to the 'traded efficiently' phrase" because a "***whereby clause*** in a method claim is not given weight when it simply expresses the intended result of a process step positively recited." *Id*. at 1381 (citations omitted) (emphasis added). Here, by contrast, the relevant term is ***not*** a whereby clause; it is the very first step of the recited method.

Aptiv's other asserted patents confirm that the "efficient communication" limitation is not merely a byproduct of performing the four communication steps. For example, claims 5 and 10 of the related '643 patent recite similar components and four similar communication steps (*i.e.*, "receiving first USB host signals…," "routing the second USB signals…," "receiving second USB signals…," and "routing the second USB signals…"). But they do not claim "efficient communication." Since Aptiv chose to include a separate "efficient communication"

limitation in the '072 Patent, it cannot now argue the limitation is meaningless. *See Wasica Fin. GmbH v. Cont'l Auto. Sys., Inc.*, 853 F.3d 1272, 1288 n.10 (Fed. Cir. 2017) ("It is highly disfavored to construe terms in a way that renders them void, meaningless, or superfluous.").[15] Aptiv cannot escape this fact by arguing that the first limitation (containing the language at issue) merely "specifies the components of the system on which the process steps are performed." (*See supra* p. 35 (Opening).) While it is true that the ***second*** half of the first limitation contains structural components, Aptiv's argument that the first limitation does nothing more than refer non-substantively to the operation of the first limitation's components would read out the ***first*** half of the limitation, which requires "providing efficient communications" among those components.

> providing efficient communications among USB components of a data communication system that includes a first input port, a second input port, a USB hub, a USB bridge connected to the USB hub, an embedded USB host connected to the USB hub, a USB port connected to a USB device capable of operating in a USB Host mode and a USB device mode, and USB multiplexing switches connected to the USB port, the USB hub, and the USB bridge;

Aptiv's argument that the claimed method is "efficient" because it avoids "the need to provide additional cabling in the vehicle" creates more confusion. (*See supra* p. 35 (Opening) (citing '072 patent, 4:7-14).) As an initial matter, efficient cabling and/or avoiding the use of

[15] Contrary to Aptiv's characterization of *In re Copaxone Consol. Cases*, the Federal Circuit did ***not*** hold that "therapeutically effective regime" was non-limiting laudatory language. Rather, the Court held that "[t]he claims are clear that the dosing has to be 'therapeutically effective regimen'; the addition of 'the regimen being sufficient to' be therapeutically effective is superfluous." 906 F.3d at 1023. That is, the claims required effectiveness in two instances. The Court held that the second instance was not limiting. Here, Aptiv attempts to do away with the efficient communication requirement altogether.

"special" ports has no apparent relationship to the claim, which recites "providing efficient ***communications***…." (Ex. 48 ¶87.) And if Aptiv were correct that the disputed limitation requires more efficient components, that would contradict Aptiv's earlier argument that "efficiency" means nothing more than performing the communication steps recited elsewhere in the claim. Aptiv's own confusion over the meaning of the "efficient communication" limitation confirms its indefiniteness.

3. Plaintiff's Reply Position

The parties' dispute regarding this term boils down to whether the inclusion of the word "efficient" would frustrate a POSITA's understanding of the scope of claim 6. (*See* Ex. 43 at 92:9-94:6 (no issue with claim scope without the word "efficient").) But the parties agree that there is no known measurement or quantification for efficiency in the USB context. (*See supra* p. 36 (Responsive).) This means a POSITA would not understand "efficient" to be a term of degree, but would instead understand "efficient communications" to be a qualitative description of the result of deploying the claimed method. None of Microchip's arguments urge otherwise.

First, Microchip suggests "efficient" is indefinite here because "substantially" was found to be indefinite in a different context. (*See supra* pp. 36 (Responsive) (citing *Midwest Athletics & Sport Alliance LLC v. Ricoh USA, Inc.*, No. 2:19-cv-514-JDW, 2020 WL 6158233, at *3-4 (E.D. Pa. Oct. 21, 2020)).) The *MASA* patent claimed "a first guide plate pivotable ***at least substantially*** about said axis."[16] 2020 WL 6158233 at *3. "At least" means some threshold level is required; the absence of that phrase in claim 6 means no threshold level of efficiency is required. Moreover, in *MASA*, the patentee's expert conceded that "substantially" was a term of degree because it described some amount of variability in the pivoting motion. *Id.* at *4. Here,

[16] Emphases supplied throughout unless otherwise noted.

the unrebutted evidence is that "efficient" is not a term of degree in the USB context. (*See supra* p. 36 (Resp.).)

Second, Microchip argues that "efficient" cannot describe the effects of practicing the invention unless in a preamble or "whereby" clause. (*See supra* pp. 37-38 (Resp.).) Microchip is wrong. *Copaxone*, 906 F.3d at 1023 and *Minton*, 336 F.3d at 1381, both considered adjectives ("effective" and "efficient[]," respectively) outside the preamble, and the term in *Copaxone* was not in a "whereby" clause. *See also Syntex (U.S.A.) LLC v. Apotex, Inc.*, 407 F.3d 1371, 1378 (Fed. Cir. 2005) (holding "in a stabilizing amount" was non-limiting statement of intended result). Where the surrounding language makes clear that a claim term is describing the effect of implementing the invention, that term is neither limiting nor indefinite. Like in *Copaxone*, the claim here includes other limitations that ensure that the resulting communication will be efficient. (Ex. 47 ¶¶ 10-11); *see Copaxone*, 906 F.3d at 1023.

Third, Microchip argues that claims 5 and 10 of Aptiv's '643 Patent that do not include the "efficient communication" language proves its inclusion here was meant to impose an affirmative limitation. (*See supra* p. 38 (Resp.).) But there are other differences between the limitations in the '643 Patent claims and claim 1 of the '072 Patent. For example, whereas the '072 Patent recites "USB multiplexing switches" in the "routing" communication steps, neither '643 Patent claim has that language, instead referring to "routing logic." (*Compare* '072 Patent Cl. 1 *with* '643 Patent Cls. 5 & 10.) That distinction, and others, disposes of Microchip's argument that "efficient" was meant to further limit the claim. (*See* Ex. 47 ¶¶ 10-13.)

Fourth, Microchip suggests that the plain and ordinary meaning reads out "providing efficient communications among USB components of a data communication system" from the claim. (*See supra* p. 39 (Resp.).) Not so. That claim limitation goes on to specify the

components that must be included in the system. (*See supra* p. 39 (Resp.).) The first portion (which Microchip shades in blue, *see supra* p. 39 (Resp.)) specifies that the communications steps (recited in the remaining claim limitations) must be performed on that system. Together, the two parts of the limitation make clear that the claim requires "provid[ing] efficient communications" by performing the subsequent steps in a system with the recited components. (*See* Ex. 43 at 92:9-94:6 (taking issue only with the word "efficient").)

4. Defendant's Sur-Reply Position

Aptiv concedes that "there is no known measurement or quantification for efficiency in the USB context." (*See supra* p. 39 (Reply).) Aptiv's only argument against indefiniteness is that ***because*** a POSITA could not make sense of "efficient communications," it must be non-limiting. This circular assertion—because the term is indefinite, it must be definite—is contrary to law and logic.

Relatedly, Aptiv's argument that "efficient" is not a term of degree because there is "no known measurement or quantification for efficiency" is wrong. (Reply, 10; Ex. 55, 88:22-25.) Terms of degree are often qualitative. *See, e.g.*, *Interval Licensing LLC v. AOL, Inc.*, 766 F.3d 1364, 1374 (Fed. Cir. 2014) ("unobtrusive manner").

Nor does *Masa*, which addressed the term "***at least*** substantially," somehow suggest that terms without the phrase "at least" are not terms of degree. (*See supra* p. 39-40 (Reply).) Terms of degree need not employ such phrases. *E.g.*, *Berkheimer v. HP Inc.*, 881 F.3d 1360, 1364 (Fed. Cir. 2018) ("minimal redundancy" was indefinite because it was "highly subjective"). Indeed, even without a prefatory "at least," the word "substantially" is consistently recognized as a term of degree. *E.g.*, *KLA-Tencor Corp. v. Xitronix Corp.*, 2011 WL 318123, at *5 (W.D. Tex. Jan. 31, 2011) ("substantially maximize the strength of the output signal" was indefinite term of degree) (quotation marks omitted).

Aptiv's only new case is beside the point. (*See supra* p. 40 (Reply).) There, the court found the phrase "stabilizing amount" to be a non-limiting description of an intended result. But the full claim term—"a stabilizing amount ***between 0.001% and 1.0% wt/vol***"—quantified the requisite amount. *Syntex (U.S.A.) LLC*, 407 F.3d at 1374. Here, in contrast, "efficient communication" is not accompanied by a quantification of the requisite efficiency.

D. Term No. 7: "wherein the USB hub and USB bridge have different components and functionality"

No.	Claim Term	Plaintiff's Proposed Construction	Defendant's Proposed Construction
7	"wherein the USB hub and USB bridge have different components and functionality" '643 patent, claims 1, 5, and 10.	Not definite	Indefinite

1. Plaintiff's Opening Position

Microchip claims this straightforward language is indefinite. Not so. This claim limitation requires what it says: the claimed USB bridge and the claimed USB hub must have different components and different functionality from each other. Merriam Webster's definition of "different" confirms the common meaning of that word: "partly or totally unlike in nature form or quality" or "not the same." (Ex. 41 (*Different*, Merriam-Webster Online Dictionary (Jan. 8, 2024), https://www.merriam-webster.com/dictionary/different).) Therefore, as long as the claimed USB bridge and the USB hub do not have the exact same components and do not have the exact same functionality, they meet this limitation. This is consistent with how the Federal Circuit has construed the term "different." *See, e.g.*, *Sorensen v. Int'l Trade Comm'n*, 427 F.3d 1375, 1379 (Fed. Cir. 2005) (construing "different characteristics" to mean "any difference in characteristics").

Notably, this language was added by the examiner to place the at-issue claims in position for allowance. (D.I. 116-1, Ex. 35 at APTIV_10004384-86 (examiner adding "have different components and functionality" to claims 1, 5 and 10).) The added language is therefore presumed definite. *See Nature Simulation Sys. v. Autodesk, Inc.*, 23 F.4th 1334, 1343 (Fed. Cir. 2022) ("We presume that an examiner would not introduce an indefinite term into a claim when he/she chooses to amend the claim for the very purpose of putting the application in a condition for allowance." (quoting *Tinnus Ents., LLC v. Telebrands Corp.*, 733 F. App'x 1011, 1020 (Fed. Cir. 2018)).

A POSITA would see no ambiguity in the requirement that the bridge and hub have "different components and functionality" in light of the specification, understanding that the claimed USB bridge would need to provide some functionality that the claimed USB hub does not. (Ex. 40 ¶¶ 56-57.) The specification describes this functionality at length. (*See, e.g.*, '037 Patent at Fig. 6, Fig. 7, 4:41-50, 5:67-6:2, 6:10-13, 6:40-55, 7:26-8:38.)

A POSITA would also readily understand the requirement that the bridge and the hub have "different components." In the context of a multiple-chip embodiment of the invention, this requirement could be met by the bridge and the hub having separate integrated circuits. (Ex. 40 ¶ 58.) In embodiments where the hub and the bridge are on the same integrated circuit, as illustrated in Figures 5 and 6, a POSITA would understand this limitation to require that the specific components of the integrated circuits performing the hub- and bridge-related functions not be coextensive, such that there is at least one physical component that is part of the bridge or hub that is not a component of the other. (*Id.* ¶ 59-62.)

2. Defendant's Answering Position

The final limitation of each independent claim of the '643 patent requires that the "USB hub" and "USB bridge"—which necessarily have different components and functionality

already—also "have ***different components and functionality***." But a POSITA would not know what additional differences are claimed, and the claims are thus indefinite. *See Prolifiq Software Inc. v. Veeva Sys. Inc.*, No. C 13-03644 SI, 2014 WL 3870016, at *5-8 (N.D. Cal. Aug. 6, 2014) (claims reciting "differently versioned" digital content elements were indefinite).

Yet again, Aptiv's proposed solution is to read the problematic language out of the claim. It argues "as long as the claimed USB bridge and the USB hub do not have the exact same components and do not have the exact same functionality, they meet this limitation." (*See supra* p. 42 (Opening).) But a POSITA would have understood a hub and bridge to inherently have different components and functions. (Ex. 48 ¶92.) For example, a USB hub is used to connect an upstream host to multiple downstream devices, while a USB bridge allows two USB hosts to communicate. (*Id.*) Further, the claimed hub and bridge already have some different components and functions by virtue of the other claim limitations. (Ex. 48 ¶93.) For example, the claims recite that "a USB hub [is] connected to the USB Bridge," confirming that the hub and bridge are separate components that must be linked together. (*Id.*; Ex. 49 at 383 ("connected" means "joined or linked together").) Similarly, the claims require that communications sometimes go "directly to the USB hub" and "bypass[] the USB bridge," further confirming that the hub and bridge are different components. (Ex. 48 ¶93.)

The additional requirement that the hub and bridge "have different components and functionality" should connote a different meaning than those already apparent from the preceding limitations. *See Bd. of Regents*, 533 F.3d at 1371. Absent that, the disputed limitation would be superfluous, which is "highly disfavored." *Wasica*, 853 F.3d at 1288 n.10; *see Merck & Co. v. Teva Pharms. USA, Inc.*, 395 F.3d 1364, 1372 (Fed. Cir. 2005) ("A claim construction that gives meaning to all the terms of the claim is preferred over one that does not do so.").

Here, a POSITA would not know what ***additional*** differences are required, nor whether such differences would be for components, functionality or both. (Ex. 48 ¶¶94-96.)

As to functionality, a POSITA would not know whether the claim requires that the hub and bridge perform different types of functions, or distinct actions (*e.g.*, separate operations that do not operate jointly on the same signals or data), nor what degree of difference is required. (Ex. 48 ¶¶96-98.) Aptiv argues that a POSITA would understand that "the claimed USB bridge would need to provide some functionality that the claimed USB hub does not." (*See supra* p. 43 (Opening).) But the claims already require that the hub and bridge perform different functions. Aptiv fails to explain what ***additional*** differences are required. (Ex. 48 ¶¶96-98.)

"Different components" also could mean anything from having different part types; to being made from different materials; to being made from the same parts and materials but being physically distinct.[17] (Ex. 48 ¶¶96-98.) Aptiv argues that a POSITA would have understood that the "different component" requirement could be met "by the bridge and hub having separate integrated circuits." (*See supra* p. 43 (Opening).) But that argument ignores that the claims already require the hub and bridge to be separate parts (and thus have necessarily different components). (Ex. 48 ¶¶99-101.) The claim language leaves open the degree (partial or complete) and type (form or quality) of unspecified differences. The specification provides no guidance; it includes no information regarding the parts or materials of the hub or bridge, nor any discussion of how (if at all) they must differ. ('643 patent, 1:63-2:20, 7:22-8:42; Ex. 48 ¶¶99-101.)

[17] Aptiv's extrinsic evidence confirms that "different" could mean "physically distinct." (Ex. 41 ("different" means "distinct").)

Aptiv's reliance upon *Sorensen v. Int'l Trade Comm'n*, 427 F.3d 1375 is misplaced. As an initial matter, the Court there did not find that "different" always means "any difference." Rather, the Court determined that—in light of the specification and prosecution history in that case—the patentee had not disavowed differences in color. *Id*. at 1378. Further, neither party in *Sorensen* argued that "different characteristics" was indefinite. Plus, the claims there recited "plastic materials" that did not inherently have different characteristics, and the specification recognized that the "plastic materials may be either the same material or different materials." *Id.* at 1379. Here, the recited components (hubs and bridges) inherently have different components and functionalities. Thus the "different components and functionality" limitation must mean something more than ***any*** difference, as Aptiv contends.

That "this language was added by the examiner to place the at-issue claims in position for allowance" does not preclude an indefiniteness finding. (*See supra* p. 43 (Opening).) Aptiv cites *Nature Simulation Sys. v. Autodesk, Inc.*, but that opinion cited a non-precedential case to hold that the court owes an examiner deference in an apparent decision that an amendment addressed an indefiniteness issue. 23 F.4th at 1343, *modified and superseded on rehearing by*, 50 F.4th 1358 (Fed. Cir. 2022) (citing *Tinnus*, 733 F. App'x at 1020). Here, the examiner did not consider indefiniteness. (*See* D.I. 116-1, Exs. 13-14.) In any event, the Federal Circuit modified the decision and removed the part Aptiv cites.[18] Thus, "the test for definiteness is whether the claims 'inform those skilled in the art about the scope of the invention with reasonable certainty,' not whether the claim language was added by a patent examiner or was not indefinite to the

[18] The opinion was modified and reissued in response to a petition for rehearing. Although the result did not change, the panel deleted the portion of the decision upon which Aptiv now relies. Because the opinion was modified and reissued, and the original opinion was superseded by the modified decision, the original opinion cannot be relied upon as precedent.

examiner." *Nature Simulation Sys.*, 23 F.4th at 1345 (Dyk, J., dissenting) (citations omitted). Because a POSITA would not be able to determine what ***additional*** differences the claims require, they are indefinite.

3. Plaintiff's Reply Position

Microchip's indefiniteness claim is premised on a POSITA not understanding what difference in components and functionality is required beyond that already suggested in other claim limitations. (*See supra* p. 45 (Resp.); Ex. 48 ¶ 93 ("The fact that the hub and the bridge are different components suggests that they have different components.").) Microchip presumes that the "different components and functionality" language must further limit the scope of the claim in addition to the other limitations. That language, which was added by the examiner, clarifies any ambiguity by confirming what the other limitations suggest: the bridge and hub must have different components and functionality.

This is supported by *Copaxone*, which Microchip cites: where claims include requirements in two instances, the second instance need not be limiting. (*See supra* p. 38 n.15 (Resp.).) In *Copaxone*, where the claims made clear that the dosing regimen had to be "therapeutically effective," the additional language requiring "the regimen being sufficient to" be therapeutically effective was superfluous. *See Copaxone*, 906 F.3d at 1023. Here, because the claim makes clear that the hub and bridge have distinct components and different functions, the additional language stating that the "USB hub and USB bridge have different components and functionality" need not further limit the claim.

Microchip and its expert contend the term is indefinite because a POSITA would not know "what degree of difference is required." (*See supra* p. 45 (Resp.).) But that improperly reads in a degree limitation where none exists. The disputed claim does not include any language suggesting a threshold degree of difference, and therefore ***any*** difference suffices. *See*

Endo Pharms. Inc. v. Watson Lab'ys, Inc., No. 2:13-CV-192-JRG, 2014 WL 2859349, at *10 (E.D. Tex. June 23, 2014) (any reduction would meet the requirement of "reducing inflammation" because claim did not contain words of degree). Microchip's strawman inquiry of what kind of difference (difference in type of component, material, or physical distinction), (*see supra* at p. 47 (Resp.)) is a red herring: the claim language is not limited to a type or amount of difference, therefore any amount of difference, and any type of difference, suffices. *See Endo Pharms. Inc.*, 2014 WL 2859349 at *10.

Finally, contrary to Microchip's assertion (*see supra* p. 47 (Resp.)), the fact that the examiner added the disputed language weighs against indefiniteness. Microchip argues that Aptiv cites to non-precedential authority (*See supra* p. 47 (Resp.)); this basic proposition is supported by precedential authority as well. For example, in *Sonix Tech. Co., Ltd. v. Publ'ns Int'l, Ltd.*, 844 F.3d 1370, 1380 (Fed. Cir. 2017), the Federal Circuit found the term "visually negligible" to be definite, citing evidence that the examiner understood the term and applied it during examination and re-examination. This "provide[d] evidence that a skilled artisan did understand the scope of this invention with reasonable certainty." *Id*. Here, there can be no question that the examiner understood the language in question as he was the one who added it to the claims. (D.I. 116-1, Ex. 35 at APTIV_10004384-86.)

4. Defendant's Sur-Reply Position

The parties' dispute over this term boils down to which of two competing presumptions governs the examiner's decision to add this term to the claims. Because Microchip's presumption would give effect to the examiner's amendment, while Aptiv's would nullify it, Microchip's must be correct.

Aptiv presumes that an examiner would not add indefinite language to a claim. As an initial matter, Aptiv's only precedential support for this supposed presumption, *Sonix*

Technology Co. v. Publications International, Ltd., 844 F.3d 1370, is inapposite. There, the Court relied on facts ***beyond*** the examiner's use of a term to conclude that it was definite. Namely, (1) the specification disclosed an "exemplary design"; (2) the defendant did not argue indefiniteness until late in the case; and (3) the patentee and its expert were able to understand and apply the term. *Id.* at 1379. Thus, *Sonix* does not stand for the proposition that an examiner's use of a term alone indicates definiteness.

Even if Aptiv's presumption were legally supported, it cannot trump the more fundamental presumption that an examiner's amendment must mean ***something***. *See Javelin Pharms., Inc. v. Mylan Lab'ys Ltd.*, 2017 WL 4511352, at *3 (D. Del. Oct. 10, 2017) (clause used to overcome obviousness rejection was limiting); *CUPP Cybersecurity, LLC v. Trend Micro, Inc.*, 2021 WL 5865393, at *7 (N.D. Tex. Dec. 10, 2021) ("'file transfer speeds' must mean something beyond merely the speed at which files are transferred"). Here, the examiner expressly stated that his amendment was a substantive addition "to better place the application in condition for allowance, particularly ***adding the limitation*** that the prior arts fail to each." (D.I. 116-1; Ex. 35, APTIV_10004384.) Accordingly, Aptiv's interpretation—which, in service of a *post hoc* validity argument, interprets the examiner's language as a non-limiting redundancy that merely "confirm[s] what the other limitations suggest"—cannot be correct. (*See supra* pp. 47-48 (Reply).)

Copaxone does not change this result. There, a single claim required both a "therapeutically effective regimen" and that "the regimen be[] sufficient to" be therapeutically effective. The court found that repetition superfluous. *In re Copaxone Consol. Cases*, 906 F.3d at 1023. But here the disputed term appears only once and was added in a presumptively substantive examiner's amendment.

E. Term No. 8: "signal detection circuit"

No.	Claim Term	Plaintiff's Proposed Construction	Defendant's Proposed Construction
8	"signal detection circuit" '643 patent, claims 1 and 5.	35 U.S.C. § 112(f) does not apply; not indefinite	Indefinite means-plus-function term. Function: determining whether a connected device is operating in host mode. Corresponding structure: none.

1. Plaintiff's Opening Position

The core of the parties' dispute regarding "signal detection circuit" is whether the rules of "means-plus-function" claiming under 35 U.S.C. § 112(f) apply to limit the scope of this term. Because the claim language does not include the word "means," § 112(f) is presumed not to apply. *Williamson v. Citrix Online, LLC*, 792 F.3d 1339, 1348 (Fed. Cir. 2015) (en banc). It is thus Microchip's burden to demonstrate that the limitation, as understood by a POSITA, "fails to recite sufficiently definite structure or else recites a function without reciting sufficient structure for performing that function." *Apex Inc. v. Raritan Comput., Inc.*, 325 F.3d 1364, 1373 (Fed. Cir. 2003). "To determine whether a claim recites sufficient structure, it is sufficient if the claim term is used in common parlance or by persons of skill in the pertinent art to designate structure, ***even if the term covers a broad class of structures and even if the term identifies the structures by their function***." *Skky, Inc. v. MindGeek, s.a.r.l.*, 859 F.3d 1014, 1019 (Fed. Cir. 2017) (cleaned up and emphasis added).

Beginning with the plain language of the claim, "circuit" itself connotes structure to a POSITA, and the adjectival qualification that the circuit is for "signal detection" provides a further identification of "sufficient structure to perform the claimed functions to one of ordinary

skill in the art." *Apex*, 325 F.3d at 1374; (*see* Ex. 40 ¶¶ 65-66). A POSITA would understand that "signal detection circuit" connotes a class of circuits that perform signal reception and identification functions. (*Id.* ¶¶ 67, 71.) Indeed, the term "signal detection circuit" was used by POSITAs in the pertinent field of serial signaling to describe a class of circuits used for signal detection as part of the USB signaling process. (*See* Ex. 42 ['965 Patent].) US Patent No. 7,282,965, entitled "Signal detection circuit capable of automatically adjusting threshold value," is a patent issued in 2007 that makes exemplary use of the disputed term, disclosing that "[i]n serial communications, a signal detection circuit for detecting whether or not a prescribed signal is being input is often used." (Ex. 42 at 1:10-12.) The '965 patent provides an example of the use of the class of structures named by the claim term in the specific context of USB: "In Universal Serial Bus (USB) and Serial AT Attachment (serial ATA), the signal detection circuit is used for a return sequence from an initialize sequence and a power management state," (*id.* at 1:10-12, 1:16-19), and further explains the benefits of a particular prior art "signal detection circuit that outputs a squelch signal required in USB 2.0 Standard" (*Id.* at 1:41-42; *see*Ex. 40 ¶ 69 (citing USB 2.0 at Figure 7-1).)

The claims of the '643 patent consistently use the term "signal detection circuit" to connote structure that performs the functions of signal detection circuits that were known in the art: receiving a signal and detecting what type of signal is being received. Devices operating in host mode and devices operating in device mode can generate different signals under the USB specification. (Ex. 40 ¶ 71.) And during the process of enumeration, in which devices are assigned addresses and the type of device is determined, the mode in which the device is operating can be detected based on signals received by a hub from a connected device. (*Id.* ¶¶ 69-71.) In claim 1, the "signal detection circuit" (1) "receiv[es] USB signals from the consumer

USB device via the second USB port" and (2) determines whether the signal is from a consumer device "operating in a USB host mode" or "operating in a USB device mode." Because a POSITA would recognize that the claim term "signal detection circuit" is a name for a class of structure that performs the functions set forth in the claim, Microchip cannot carry its burden to overcome the presumption that § 112(f) does not apply to limit the scope of the claim term. *See Apex*, 325 F.3d at 1373.

2. Defendant's Answering Position

Aptiv does not dispute that, if "signal detection circuit" is a means-plus-function limitation, it is indefinite since the specification discloses no corresponding structure. (*See supra* pp. 50-52 (Opening) ; Ex. 48 ¶¶103-09.) The parties dispute only whether §112(f) applies. It does. The term uses a nonce word that connotes no known structure to perform the claimed functions.

"One way to demonstrate that a claim limitation fails to recite sufficiently definite structure is to show that, although not employing the word 'means,' the claim limitation uses a similar 'nonce word that can operate as a substitute for 'means' in the context of § 112[f].'" *MTD Prods. Inc. v. Iancu*, 933 F.3d 1336, 1341 (Fed. Cir. 2019) (citations omitted). Here, substituting the word "means" for "signal detection circuit" in claim 1 makes the means-plus-function format apparent: the limitation would recite "[means] for receiving USB signals from the consumer USB device" and making "a determination … that the consumer device is operating in a USB host mode … [or] is operating in a USB device mode."[19] A "critical question is whether 'the claim term is used in common parlance or by [skilled artisans] to designate structure,' including either a particular structure or a class of structures." *Id.* (citation omitted)

[19] Claim 5 similarly recites the function of the means ("determining … whether the second USB signals emanate from a second USB host").

(emphasis added). Courts also consider whether "its interaction with the other components in the [system], is understood as the name for structure." *Williamson*, 792 F.3d at 1351 (citation and quotation marks omitted).

The Federal Circuit has expressly declined to hold that the term "circuit" is sufficient to avoid application of Section 112 ¶6. *See Apex Inc.*, 325 F.3d at 1373 ("[W]e do not find it necessary to hold that the term 'circuit' by itself always connotes sufficient structure"). "Signal detection circuit" does not connote a particular structure or a class of structures, and the claims say nothing about its interaction with the other components in the system. (Ex. 48 ¶¶104-08.)

While Aptiv argues that the claims "connote structure that performs the functions of signal detection circuits that were known in the art" (*see supra* p. 51 (Opening)), it never identifies the purported structure, or even class of structures, that is supposedly suggested. (Ex. 48 ¶¶104-14.) Aptiv's expert claims that a POSITA would have understood the term "as a circuit capable of detecting signals related to the system configuration as described in sections 4.6, and 7.1 of the USB 2.0 specification." (Ex. 40 ¶68.) But—as section 4.6 describes only functions—that is just a suggested description of the (undisclosed) structure by reference to claimed function, which is a gambit not allowed. (Ex. 48 ¶¶112-13; *Rain Computing, Inc. v. Samsung Elecs. Am., Inc.*, 989 F.3d 1002, 1006–07 (Fed. Cir. 2021) (prefix "user identification" in "user identification module" "does not impart structure because it merely describes the function of the module: to identify a user").) Section 7.1 describes a circuit used for data communication generally, not a circuit for determining if a device is in host or device mode. (Ex. 48 ¶¶112-13.) To be clear, that a POSITA could build a circuit that performs the claimed function does not mean that the disputed term itself provides a "sufficiently definite meaning as the name for structure." *Williamson*, 792 F.3d at 1349; *see also Limestone Memory Sys. LLC v.*

Micron Tech., Inc., No. 8:15-cv-00278, 2019 WL 6655273, at *17-20 (C.D. Cal., Sept. 11, 2019) ("activation control circuit" was means-plus-function term as a POSITA would not understand the term to provide "a sufficiently definite meaning as the name for structure"); *MLR, LLC v. Kyocera Wireless Corp.*, No. 05-CV-0935-BAJB, 2006 WL 6143076, at *1, Ex. B (S.D. Cal. Oct. 27, 2006) ("adaptive control circuit" was means-plus-function term).

Aptiv's only evidence that the term "signal detection circuit" itself connotes a class of structures is a 2007 patent that "makes exemplary use of the disputed term." (*See supra* p. 51 (Opening).) But a singular and unrelated patent that happens to use the same language does not mean that the term "signal detection circuit" was "used in common parlance or by [skilled artisans] to designate a particular structure or class of structures." *Team Worldwide Corp. v. Intex Recreation Corp.*, No. 2020-1975, 2021 WL 4130634, at *6 (Fed. Cir. Sept. 9, 2021) (that "skilled artisan would have known that devices existed that can perform the functions of the claimed 'pressure controlling assembly' . . . is not the relevant inquiry"). If anything, that Aptiv has been able to cite only that singular source proves that the term was not in common parlance.

In any event, that 2007 patent describes a "signal detection circuit" with a specific purpose—"automatically adjusting threshold value" (Ex. 42, Title). And the relevant question is "whether a POSITA would understand the disputed term not just as structure, but as sufficient structure '***for performing [the claimed] function***.'" *XR Commc'ns, LLC v. ARRIS Sols., Inc.*, No. 2022-1125, 2023 WL 3529830, at *2 (Fed. Cir. May 18, 2023) (citation omitted) (emphasis added). Here, the claimed signal detection circuit performs different functions, determining if a USB device is operating as a host or device. That patent from 14 years ago used the phrase "signal detection circuit" to refer to a structure performing an automatic threshold value adjustment function certainly does not support the idea that the '643 patent's use of the same

phrase, to perform a different function, would connote any particular structure to a POSITA. Section 112(f) therefore applies.

The court must, therefore, determine "what structure, if any, disclosed in the specification corresponds to the claimed function." *Williamson*, 792 F.3d at 1351. The patent discloses none: it does not even mention the phrase "signal detection circuit" outside the claims. Aptiv does not argue otherwise. Accordingly, '643 patent claims 1-9 are indefinite.

3. Plaintiff's Reply Position

In its attempt to classify this term as a means-plus-function term, Microchip consistently ignores the full language of the claims, which set forth how the "signal detection circuit" interacts with other claimed structures to perform the claimed functions. Microchip also misreads the evidence about how the term would be understood by a POSITA in the context of the '643 Patent. Because a POSITA would understand "signal detection circuit" in the claims of the '643 Patent as a name for a class of structures that can receive USB signals from a consumer device and determine whether it is operating in host mode or device mode, Section 112(f) does not apply to this term.

The sole function identified in Microchip's proposed construction is "determining whether a connected device is operating in host mode," which reflects Microchip's disregard of the broader claim language relevant to this term. Claim 1 requires "providing a signal detection circuit ***for receiving USB signals from the consumer USB device via the second USB port***" and routing USB signals "in accordance with a determination by the signal detection circuit that the consumer device is operating in a USB host mode" or "in accordance with a ***determination by the signal detection circuit that the consumer device is operating in a USB device mode***." The context of the claims here informs a POSITA about how the "signal detection circuit" interacts with the consumer device to perform the required functions. This context is critical to the

evaluation of whether the claim is in means-plus-function form. As Aptiv's expert explains, "devices operating in host mode and devices operating in device mode can ***generate different signals under the USB specification***, and ***during enumeration the mode can be detected based on signals received by a hub from a connected device***," and "[t]he claims of the '643 patent use 'signal detection circuit,' consistent with how a POSITA would have understood to term, to refer to this class of circuits that receive USB signals" and make such a determination. (Ex. 40 ¶ 71.) Microchip's invitation to focus solely on the term "signal detection circuit" invites the same error the Federal Circuit criticized in *Apex Inc. v. Raritan Comput., Inc.*, 325 F.3d 1364, 1372 (Fed. Cir. 2003) ("The primary source of this error lies in the district court's reliance on single words of the limitations, e.g., 'circuit,' as opposed to the limitations as a whole, ...").

Nor can Microchip refute Aptiv's expert's identification of the class of structures—to which a POSITA would understand the claims to refer—that interact with USB devices and perform the claimed functions. Mr. Andrews identified multiple figures from the USB 2.0 specification as examples of such circuits. (Ex. 40 ¶¶ 69-70.) Microchip and its expert discounted one of these figures as showing "a circuit used for data communication generally, not a circuit for determining if a device is in host or device mode." (*See supra* p. 54 (Resp.).) But Microchip's expert admitted during his deposition that the same figure—Fig. 7-1 of the USB 2.0 specification—illustrates different types of circuit elements (resistors) that are present on devices versus hosts, (Ex. 43 at 27:20-29:21), and that may be used by a receiver to detect that a device has been attached to the USB bus based on a change in voltage (*id.* at 100:12-101:17). And while Mr. Dezmelyk insists that a determination of whether a host has been attached to the USB bus cannot be made by the same circuit, a POSITA would understand the "signal detection

circuit" of the claims to denote similar circuits in the same class of structures that would be capable of determining the attachment of a device operating in host mode. (*See* Ex. 47 ¶ 16.)

Finally, Microchip's attempt to downplay on-point extrinsic evidence falls short. The '965 Patent uses the exact term at issue, "signal detection circuit," in the context of a different type of USB signaling. (*See supra* pp. 51-52 (Opening).) Yet Microchip acknowledges, as it must, that the '965 Patent used the term to refer to a "'signal detection circuit' with a specific purpose—'automatically adjusting threshold value.'" (*See supra* p. 55 (Resp.).) Similarly, the claims of the '643 Patent use additional language to describe the purpose and function of the "signal detection circuit" that they require—namely, to "receiv[e] USB signals" and determine whether those signals come from a consumer device operating as a host or device. This confirms that the term is being used in the '643 Patent in the same way it was used in the '965 Patent: to refer to a class of structures that is then further bounded by other language setting forth the purpose and function of such structures.

Microchip has not shown by clear and convincing evidence that "signal detection circuit" in the context of the full claims of the '643 Patent fails to identify sufficiently definite structure such that means-plus-function rules apply.

4. Defendant's Sur-Reply Position

Despite accusing Microchip of ignoring the full context of this term—which requires not just any "signal detection circuit," but one for determining whether a device is operating in host or device mode—Aptiv continues to insist that this term is not a means-plus-function term because there purportedly exists ***other*** signal detection circuitry that admittedly does ***not*** distinguish between host and device modes. (*See supra* pp. 55-57 (Reply).) This only confirms that "signal detection circuit" is a means-plus-function placeholder with no corresponding structure.

First, Aptiv argues that "figures from the USB 2.0 specification" disclose signal detection circuitry. But Aptiv's expert acknowledges that this circuitry only detects characteristics ***other than*** host/device mode, such as "speed" and "steps in the device connection and configuration process." (Ex. 47 ¶16; *see* Ex. 43, 168:14-169:3.) Accordingly, he asserts only that "***similar*** signal detection circuits" could theoretically distinguish between host and device modes. (Ex. 47 ¶16; Ex. 55, 120:5-22 ("Q. Okay. So the USB specification doesn't explicitly disclose the three-state signal circuit that you came up with? A. No.").) Indeed, before this litigation, he had not "heard of the phrase 'signal detection circuit,' … to refer to a circuit that performs the [claimed] function"; was not aware of "any circuits that actually perform [that function]"; and had not seen "the [theoretical] structure as described in paragraph 61 of [his] reply declaration." (Ex. 55, 104:5-11, 107:7-12, 115:7-11.) The cognitive ability of Aptiv's expert in 2024 to imagine a hypothetical signal detection circuit capable of distinguishing between host and device modes does not indicate that a known signal detection circuit for performing this function existed in 2013. *Team Worldwide Corp.*, 2021 WL 4130634, at *6. And even if it did, this circuit is inoperable. (Ex. 53 ¶¶21-27.)

Second, Aptiv argues that a "signal detection circuit" disclosed in the '965 patent indicates that the term refers to specific structure. (*See supra* pp. 56-57 (Reply).) But Aptiv concedes the "signal detection circuit" in that patent has a different structure and cannot perform the function claimed in the '643 patent. (*See supra* pp. 54-55 (Resp.).) Whether or not the phrase "signal detection circuit" references specific structure in the context of the '965 patent's distinct technology, it does not in the context of host-mode detection. *See XR Commc'ns*, 2023 WL 3529830, at *2 (question is whether POSITA would understand disputed term not just as structure, but as sufficient structure "for performing [claimed] function").

F. Term No. 9: "routing logic circuit"

No.	Claim Term	Plaintiff's Proposed Construction	Defendant's Proposed Construction
9	"routing logic circuit" '643 patent, claims 1, 5, and 10.	Not indefinite	Indefinite

1. Plaintiff's Opening Statement

In contrast with Microchip's argument regarding "signal detection circuit," Microchip concedes that "routing logic circuit" would be understood by a POSITA to refer to sufficiently definite structure such that 35 U.S.C. § 112(f) does not apply. A POSITA would understand from the plain language of the claim term that "routing logic circuit" connotes a class of structures that directs signals from one input/output interface to another. (Ex. 40 ¶ 73.) And the claims set forth the functions performed by the "routing logic circuit." In claim 1, which is representative, the function is that of "routing the USB signals emanating from the consumer USB device" in a manner consistent with whether the consumer USB device is operating in host or device mode:

- if in host mode, the "routing logic circuit" routes the signals to the first UBS port through both a "USB bridge and a USB hub connected to the USB bridge"; and
- if in device mode, the "routing logic" routes the signals to the first USB port through only the USB hub and "bypassing the USB bridge."

('643 Patent at claim 1; *see also id.* at claims 5, 10 (requiring routing signals depending on whether such signals emanate from a USB host).)

Consistent with the use of "routing logic circuit" in the claims, the specification discloses multiple configurations in which routing logic circuitry may be present. Circuits inside a USB

multiplexing switch are examples of such circuitry. (Ex. 40 ¶ 73.) Another example, in Figure 5 and its related description, is that "USB Routing Logic" circuits may be included as part of an integrated circuit "Combo USB Hub/Bridge." ('037 Patent at Fig. 5, 5:25-29 (explaining that in one embodiment, the "USB routing/switching logic and a USB Bridge are integrated with a USB Hub in a combination USB Hub/USB Bridge Integrated Circuit (IC)"); Ex. 40 ¶ 74.) Microchip apparently contends that "routing logic circuit" is indefinite because the term encompasses a broad class of possible structures, but breadth of claim scope does not imply indefiniteness as a matter of law. *BASF Corp. v. Johnson Matthey Inc.*, 875 F.3d 1360, 1367 (Fed. Cir. 2017) ("But the inference of indefiniteness simply from the scope finding is legally incorrect: 'breadth is not indefiniteness.'").

2. Defendant's Answering Position

The parties agree that "routing logic circuit" is not a §112(f) term. (*See supra* p. 59 (Opening).) Unlike "signal detection circuit," the claims do connote some structure for "routing logic circuit" based upon "its interaction with other components" in the system. *Williamson*, 792 F.3d at 1351. Specifically, the claims recite how the "routing logic circuit" interacts with the USB hub and bridge: (a) "rout[ing] the USB signals . . . directly to a USB bridge and a USB hub connected to the USB bridge"; and (b) "rout[ing] the USB signals . . . directly to the USB hub" depending on what mode the consumer device is operating in. (Ex. 48 ¶115); *see also Masimo Corp. v. Philips Elecs. N. Am. Corp.*, C.A. No. 09-80-LPS, 2015 WL 7737308, at *7-8 (D. Del. Dec. 1, 2015) (finding "processor configured to perform a method" not means-plus-function term where claim described interaction with other claim components); *3G Licensing, S.A. v. Blackberry Ltd.*, C.A. No. 17-82-LPS-CJB, 2018 WL 4375091, at *7 (D. Del. Sept. 13, 2018) (same).

The term is nonetheless indefinite because it "is a coined term that has no ordinary meaning in the industry." *Iridescent Networks, Inc. v. AT&T Mobility, LLC*, 933 F.3d 1345, 1353 (Fed. Cir. 2019); (Ex. 48 ¶115.) To be clear, Microchip does not contend that "routing logic circuit" is indefinite because the term "encompasses a broad class of possible structures," as Aptiv suggests. (*See supra* p. 60 (Opening).) Rather, the issue is that because "routing logic circuit" is a coined term (not a term of art), it has ***no*** boundaries—broad or otherwise. Thus, the Court must determine "whether the intrinsic evidence provides objective boundaries to the scope of the term." *Iridescent Networks*, 933 F.3d at 1353. It does not.

While the parties agree that a multiplexing switch is one structure that could perform the claimed function (*See supra* pp. 59-60 (Opening); Ex. 48 ¶¶119-20),[20] the claims make clear that "routing logic circuit" encompasses more. For example, claim 3 (which depends from claim 1) recites that "bypassing the USB bridge [the second function performed by the routing logic circuit above] is performed by a USB routing switch." ('643 patent, cl. 3.) That is, claim 3 provides a specific example of a routing logic circuit, but leaves open the question of what other circuit(s) are claimed. Further, that the '643 patent uses the term "routing logic circuit" rather than "routing switch" as used in other patents in the same patent family is "presumed to indicate that the claims have different meanings and scope." *Karlin Tech., Inc. v. Surgical Dynamics, Inc.*, 177 F. 3d 968, 971-72 (Fed. Cir. 1999); '899 patent, cl. 1 ("USB routing switch"); '420 patent, cl. 1 (same); '037 patent, cl. 1 (same); '962 patent, cl. 1 (same); '072 patent, cl. 1 ("USB

[20] An ability to identify examples of what can constitute a "routing logic circuit" is insufficient to avoid indefiniteness. *See Välinge Innovation AB v. Halstead New England Corp.*, C. A. No. 16-1082, 2018 WL 2108199, at *4-5 (D. Del. May 7, 2018) (limitation indefinite where specification providing examples but no objective guidance to determine whether a particular product met claimed properties).

multiplexing switches"). But the claims leave unclear what additional scope "routing logic circuit" covers. (Ex. 48 ¶¶118-24.)

The specification confuses the issue further because it suggests that "routing logic circuit" and "routing switch" are ***alternatives***. It states that the bridge may be "configured to act as an OTG port thus negating the need for switches ***and/or*** routing logic." ('643 patent, 7:2-3.) Such contradictory statements in the specification "introduce ambiguity" and "render [the term] indefinite." *IQASR LLC v. Wendt Corp.*, 825 F. App'x 900, 906 (Fed. Cir. 2020) (citations omitted).

3. Plaintiff's Reply Position

From the outset, Microchip admits that the language of the claims alone connotes structure for the routing logic switch. (*See supra* p. 61 (Resp.).) Microchip then concedes that the language of the claims specifies the functions that the routing logic switch performs. (*See supra* p. 61 (Resp.).) And Microchip further admits that a multiplexing switch, which is disclosed in the specification, is a structure that can perform the claimed function. (*See supra* p. 62 (Resp.).) Nevertheless, Microchip argues that "routing logic circuit" is indefinite because (1) it is a coined term that has no meaning in the industry and (2) because the specification "suggests that 'routing logic circuit' and 'routing switch' are ***alternatives***." (*See supra* pp. 61-63 (Resp.) (emphasis in original).) Microchip fails to provide clear and convincing evidence of indefiniteness on either basis.

Regardless of whether "routing logic circuit" is a coined term, the language of the claims as a whole provides objective boundaries to a POSITA in setting forth the function performed by the circuit and the components with which it interacts to perform those functions. (*See supra* pp. 60-61 (Opening).) Indeed, Microchip admits that the specification provides an example of a "routing logic circuit" in its discussion of a USB routing multiplexing switch ('037 Patent at Fig.

4): "the parties agree that a multiplexing switch is one structure that could perform the claimed function." (*See supra* p. 62 (Resp.).) And contrary to Microchip's footnote argument (s*ee supra* p. 62 n.20 (Resp.)), the example of a USB routing switch provided by the specification here ***does*** assist a POSITA in understanding the scope of the disputed structural term because it identifies exemplary structure that performs the function, unlike in the case cited by Microchip where the disputed claim term was a subjective term of degree. *Valinge Innovation AB v. Halstead New England Corp.*, No. CV 16-1082-LPS-CJB, 2018 WL 2108199, at *4 (D. Del. May 7, 2018) (addressing the term "not susceptible to damage caused by moisture").

Nor does the '643 Patent's use of the term "routing switch" render "routing logic circuit" indefinite. As to the claims of the '643 Patent, the requirement of dependent claim 3 that "bypassing the USB bridge is performed by a USB routing switch" does not introduce uncertainty regarding "routing logic circuit." Rather, it simply cabins the scope of the independent claim by requiring that at least one of the functions of the "routing logic circuit," which the parties agree may be a USB multiplexing routing switch, is performed by such a switch.

Microchip's "claim differentiation" argument based on the claims of ***other*** patents fares no better. Microchip cites and selectively quotes a single case for support of its claim differentiation argument, *Karlin Technology, Inc. v. Surgical Dynamics, Inc.*, 177 F. 3d 968 (Fed. Cir. 1999). (*See supra* p. 62.) *Karlin Tech.* deals with claims in an independent-dependent claim relationship. 177 F. 3d at 971-72. By contrast, here Microchip (1) relies on independent claims from different patents and (2) makes no attempt to show—nor could it—that the claims of those patents would have the same scope if a USB routing switch was ***fully coextensive*** with a

routing logic circuit, much less merely an example of a routing logic circuit—as the parties agree is the case here.

Finally, Microchip fails to establish that the specification's discussion of "routing logic" renders "routing logic circuit" indefinite. The fact that in "[a]nother embodiment" a bridge could be "configured to act as an OTG port thus negating the need for switches and/or routing logic" ('037 Patent at 6:64-66) does not imply—much less require—that all "switches" include the "routing logic circuit" of the claims. (Ex. 47 ¶¶ 17-18.) This section of the specification thus creates no contradiction or inconsistency with the claims' use of "routing logic circuit."

4. Defendant's Sur-Reply Position

Aptiv insists that its identification of one exemplary embodiment of a "routing logic circuit"—a "multiplexing switch"—saves the term from indefiniteness. But definiteness requires that a POSITA can identify the ***boundaries*** of a term, not just one ***example*** within those boundaries. *Nautilus*, 572 U.S. at 901-02 ("That monopoly is a property right, and like any property right, its boundaries should be clear." (citation and quotation marks omitted)). Not only does Aptiv fail to provide any such affirmative definition, the example it cites only highlights that a POSITA could not identify the term's boundaries with reasonable certainty.

Namely, dependent claim 3 recites using the exemplary structure that Aptiv identifies—a "switch"—to perform the bypassing function of the "routing logic circuit." This relationship suggests three conflicting interpretations of the "routing logic circuit." The "switch" could be (1) an alternative to the "routing logic circuit"; (2) a component of the "USB routing logic"; or (3) a synonym for the "USB routing logic." Even if a POSITA could discern which of these options is correct, each implies still more incompatible interpretations of the "routing logic circuit." For instance, if the "USB routing switch" is a component of the "routing logic circuit," that indicates that the "routing logic circuit" must do ***more*** than switching, but not what that

additional structure and/or function may entail. Alternatively, if the "USB routing switch" is an alternative to the "routing logic circuit," that indicates that they are different, but fails to explain how. Thus, even if a "switch" is one type of "routing logic circuit," a POSITA has no way to discern with reasonable clarity what else is or is not a "routing logic circuit."

G. Term No. 10: "some combination of embedded devices and consumer devices that are USB Devices along with at least one that is the second USB Host"

No.	Claim Term	Plaintiff's Proposed Construction	Defendant's Proposed Construction
10	"some combination of embedded devices and consumer devices that are USB Devices along with at least one that is the second USB Host" '037 patent, claim 16.	Not indefinite	Indefinite

1. Plaintiff's Opening Position

Microchip claims this term is indefinite because it does not specify what combination of consumer and embedded devices would suffice to satisfy the limitation. The answer lies in the claim term: as long as the system is configured to support simultaneous active (*i.e.* "persistent") USB data connections between the infotainment system (i.e. the head unit) on the one hand, and a combination of embedded[21] and consumer devices (one of which is in host mode) on the other, it meets this limitation; no specific combination is required. *See Barrette Outdoor Living, Inc. v. Fortress Iron, LP*, No. 3:21-CV-2008-E, 2023 WL 5503030, at *27 (N.D. Tex. Aug. 25, 2023) (claim term reciting a "combination pivoting and sliding motion" not indefinite and not requiring a specific ratio of pivoting and sliding).

[21] Consistent with the parties' agreed upon construction of "embedded USB host," these devices are embedded within the vehicle. (Dkt. 115 at 2.)

The disputed claim language relates to a benefit of the patented invention: the ability to maintain persistent USB data connections between a vehicle's embedded USB host (head unit) and downstream USB devices when a consumer device is connected to the system and is in host mode. Under the prior art, using role reversal and OTG ports, the USB network could be reversed, with the consumer device becoming the host, and the head unit becoming a device. (Ex. 40 ¶¶ 78-79.) However, a downside of this approach was that the USB data connection between the head unit and the other downstream devices on the network would no longer work. (*Id.*; '037 Patent at 3:56-64.) The invention, however, enabled the embedded USB host to maintain active data connections between it and the other downstream devices on the network. ('037 Patent at 8:59-63 (configuration "allowing concurrent operation of consumer devices operating in USB Device mode with consumer devices operating in USB Host mode."); Ex. 40 ¶¶ 79-80.) Downstream devices "operating in USB Device mode" could be USB devices embedded in the vehicle or consumer USB devices plugged in through consumer-facing ports. (*Id.*)

A POSITA would understand the "some combination of embedded devices and consumer devices" language to require the functionality that was not available under the prior art solutions: permitting host-to-host communication between the head unit and the consumer device in host mode while simultaneously preserving active USB data connections between the head unit and the other USB devices in the system. (Ex. 40 ¶ 80.) What specific combinations of those devices the system must accommodate is immaterial; what matters is that the system is configured to support that simultaneous active USB data for ***some*** combination of such devices. (*Id.*)

2. Defendant's Answering Position

When read in combination with claim 1, from which it depends, claim 16 of the '037 patent is indefinite because a POSITA would not have understood: (1) what an "embedded device" is or (2) whether the "some combination" requires both an embedded device ***and*** a consumer device, or only one or the other.

Claim 1 recites a "system" comprising "an **embedded [USB] Host system**" and a port to which "a **consumer device** [is] connected." Claim 16 adds that the "system further comprises an **infotainment system**, wherein the system is configured to support simultaneous active USB data connections between the **infotainment system** and ***some combination*** of **embedded devices** and **consumer devices** that are USB Devices along with at least one that is the second USB Host." This underlined limitation fails to inform a POSITA of the claim scope.

First, the scope of "**embedded devices**" is unclear given Aptiv's inconsistent usage and the fact that the term is not used in the specification. The term is not used in the specification, and Aptiv has interpreted it inconsistently. In its infringement contentions, Aptiv alleged that the "**embedded [USB] host system**" is an "**embedded device**" to which the **infotainment system** connects. (Ex. 51, 71 ("Microchip Accused Products . . . are configured to support simultaneous active USB data connections between the infotainment system and . . . ***embedded devices (e.g., the embedded USB host)***.)[22] Now, however, Aptiv equates the **infotainment system** and the **embedded [USB] host system**, calling both the "head unit." (*See supra* p. 65 (Opening) ("infotainment system (*i.e.*, the head unit)"), p. 65 ("vehicle's embedded USB host (head unit)"); Ex. 51, 71 ("an infotainment system containing the embedded USB Host system").)

[22] If that were the case, the term "embedded device" would be superfluous as claim 1 from which claim 16 depends already requires the "embedded [USB] host system."

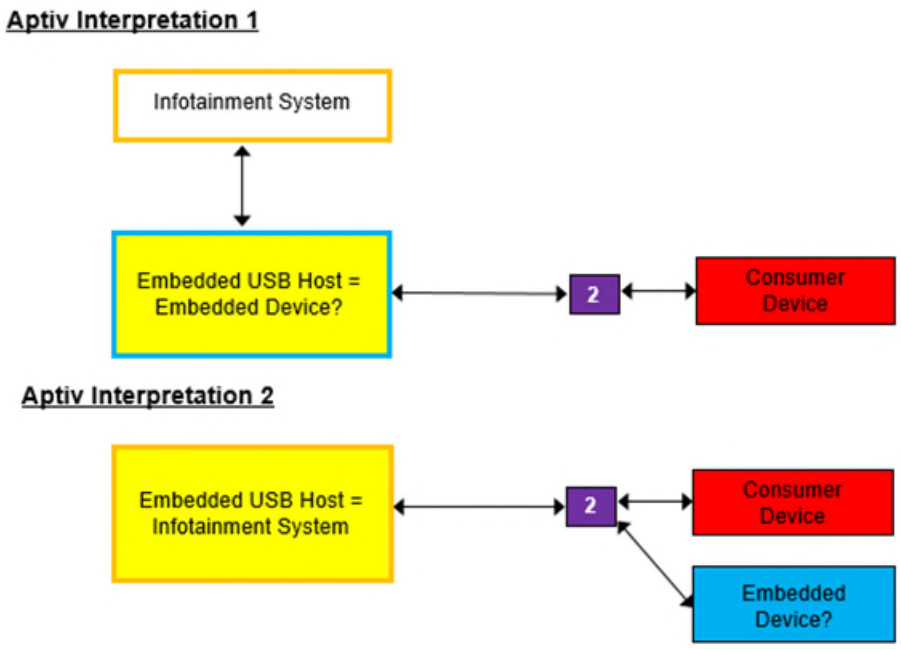

These interpretations are either inconsistent—or, if both are true, would mean that "embedded devices" are on both sides of the connection. (Ex. 48 ¶¶128-30.) This alone renders claim 16 indefinite.

Second, claim 16 does not specify what "combination" of consumer and embedded devices would suffice to satisfy the limitation. A POSITA would not have understood whether one of each of an embedded device ***and*** a consumer device are required. (Ex. 48 ¶¶131-32.) Aptiv apparently contends that a single consumer device ***or*** a single embedded device is sufficient. (Ex. 51, 71 (alleging infringement based on inclusion of single "second consumer device").) But a "combination" is defined as "the mixture you get when ***two or more things*** are combined." (Ex. 52.) For example, the requirement that a password have "some combination" of letters and numbers may not be satisfied by only using letters or only numbers. (Ex. 48 ¶132.) Under that understanding of "combination," the term requires at least one embedded device ***and*** at least one consumer device. Aptiv's argument that claim 16 relates to a benefit of the alleged invention (*i.e.*, maintaining persistent connections between an embedded USB host and

downstream USB devices) (*see supra* p. 66 (Opening).) says nothing about whether an embedded device must be present. And nothing in the intrinsic record clarifies the ambiguity.

Barrette Outdoor Living, Inc. v. Fortress Iron, LP is inapposite. There, the court found that terms requiring the combination pivoting and sliding motions were not indefinite because "the intrinsic evidence clearly illustrates the 'combination' of pivoting and sliding." 2023 WL 5503030, at *27 (specification disclosed numeric values for combination of pivoting and sliding required). The intrinsic record here does not clarify the appropriate combination of embedded and consumer devices. (Ex. 48 ¶¶130-33.)

3. Plaintiff's Reply Position

Microchip argues that the claim is indefinite because a POSITA would not understand what an "embedded device" is or what "some combination" means in the context of this claim. (*See supra* p. 67 (Resp.).) Microchip is wrong on both counts.

First, Microchip claims that the inclusion of "some combination" renders the claim scope indefinite because a POSITA would not know what specific combination of embedded and consumer devices that refers to. (*See supra* p. 69 (Resp.).) For example, Microchip asserts that "some combination" could require at least one embedded device *and* at least one consumer device, like how a password requiring "some combination" of letters and numbers needs at least one character from each category. (*See supra* pp. 69-70 (Resp.)..)

This argument fundamentally misinterprets the limitation, which is directed to the ***capabilities*** of the USB system, not a particular configuration of connected devices. ('037 Patent, Claim 16 ("wherein the system is ***configured to support*** . . ." (emphasis added)).) As Mr. Andrews explains, a POSITA would understand that a system would meet this limitation if it is configured to provide active data between the infotainment system and (1) embedded devices, (2) consumer devices, and (3) both. (Ex. 40 ¶ 79; Ex. 47 ¶ 21.) Mr. Dezmelyk all but confirmed

that Microchip's position has no merit when he was unable to identify any specific combinations of embedded and consumer devices for which the system described above could ***not*** provide the required communications. (Ex. 43 at 140:1-9; 140:11-141:5; 143:6-22; 143:24-144:7; 144:8-25; 145:2-17; 148:18-149:5; 150:11-151:20; 156:24-157:19; 158:19-159:5; 159:7-16.) That is because a POSITA would expect a system configured to provide the required communications to both embedded and consumer devices (and both) to be capable of providing those communications to ***any*** combination of embedded and consumer devices. (Ex. 40 ¶ 80;Ex. 47 ¶ 21.) Thus, any confusion over the phrase "some combination" does not create confusion over the scope of the claim, which is directed to what the system is ***configured to support***, not the particular combination of embedded and consumer devices.

Returning to Microchip's password analogy, a system (for example a keyboard) capable of inputting a password containing some combination of letters and numbers would need to be capable of (1) inputting letters, (2) inputting numbers, and (3) inputting both. A keyboard capable of such inputs could be used to generate a password containing any combination of letters and numbers, and therefore there would be no doubt that it could generate a password with "some combination" of letters and numbers. When asked about whether there existed a password such a keyboard could not be used to generate, Mr. Dezmelyk was only able to identify the absurd example of a password with 5 billion characters that would physically wear out the keyboard. (Ex. 43 at 160:14-161:5.)

Second, Microchip's claim that the term "embedded device" is indefinite is without merit. Microchip's argument is premised on a now corrected typo in Aptiv's Infringement Contentions that Microchip claims was "inconsistent" with the interpretation in Aptiv's opening brief. (*See supra* pp. 68-69 (Resp.).) This argument, raised for the first time in Microchip's

responsive brief,[23] fails because the infringement contentions are not evidence of ambiguous claim scope. In any event, Aptiv fixed the error. (Ex. 46 ("Corrected Ex. C to Aptiv's Supplemental Infringement Contentions").)

In fact, a POSITA would readily understand what an embedded USB device is in the context of these claims. The specification's use of that term to distinguish between embedded devices and consumer devices (which can be plugged in and removed from the system) would lead a POSITA to conclude that the embedded devices are non-removable devices in the vehicle's USB network. (Ex. 47 ¶¶ 22-23.) Microchip's expert confirmed at his deposition that he is familiar with embedded USB devices, which he testified are non-removable USB devices within a larger system. (Ex. 43 at 105:24-107:10) This testimony alone precludes a finding, by clear and convincing evidence, that the term is indefinite.

IV. CONCLUSION

A. Plaintiff's Position

For the foregoing reasons, the Court should adopt Aptiv's proposed constructions for the disputed claim terms.

B. Defendant's Position

Aptiv should not be allowed to use claim construction to re-write Terms 1-4 or avoid the indefiniteness of Terms 5-10.

[23] (*See* Ex. 44 ("Microchip's Initial Invalidity Contentions") at 40; Ex. 45 ("Microchip's Amended Invalidity Contentions") at 40.)

POTTER ANDERSON & CORROON LLP

/s/ Philip A. Rovner
Philip A. Rovner (#3215)
Hercules Plaza
P.O. Box 951
Wilmington, DE 19899
(302) 984-6000
provner@potteranderson.com

OF COUNSEL:

Daralyn J. Durie (*pro hac vice*)
Timothy Saulsbury (*pro hac vice*)
Eric C. Wiener (*pro hac vice*)
Andrew L. Perito (*pro hac vice*)
Joyce C. Li (*pro hac vice*)
Tannyr Pasvantis (*pro hac vice*)
MORRISON & FOERSTER LLP
425 Market Street
San Francisco, CA 94105
(415) 268-7000

Andrew T. Jones (*pro hac vice*)
MORRISON & FOERSTER LLP
2100 L St., NW
Suite 900
Washington, D.C., 20037
(202) 887-1500

W. Henry Huttinger (*pro hac vice*)
MORRISON & FOERSTER LLP
707 Wilshire Blvd.
Los Angeles, CA 90017
(213) 892-5200

Attorneys for Plaintiff
Aptiv Technologies AG

Date: June 18, 2024
11569351

MORRIS, NICHOLS, ARSHT & TUNNELL LLP

/s/ Travis J. Murray
Jack B. Blumenfeld (#1014)
Brian P. Egan (#6227)
Travis J. Murray (#6882)
1201 North Market Street
P.O. Box 1347
Wilmington, DE 19899-1347
(302) 658-9200
jblumenfeld@morrisnichols.com
began@morrisnichols.com
tmurray@morrisnichols.com

OF COUNSEL:

John M. Neukom (*pro hac vice*)
Barbara N. Barath (*pro hac vice*)
Yuqing Cui (*pro hac vice*)
Alexander H. Lee (*pro hac vice*)
DEBEVOISE & PLIMPTON LLP
650 California Street, Floor 31
San Francisco, CA 94108
Telephone: (415) 738-5700
jneukom@debevoise.com
bnbarath@debevoise.com
ycui@debevoise.com
ahlee@debevoise.com

Andrew Gish (*pro hac vice*)
Edward Tulin (*pro hac vice*)
Josef Schenker (*pro hac vice*)
GISH PLLC
41 Madison Avenue, Floor 31
New York, NY 10010
Telephone: (212) 518-2000
andrew@gishpllc.com

Ryan K. Iwahashi (*pro hac vice*)
GISH PLLC
50 California Street, Suite 1500
San Francisco, CA 94111
(415) 630-8960
ryan@gishpllc.com

Attorneys for Defendant
Microchip Technology Inc.