From: David Sroka - C16440
Sent: Wednesday, July 23, 2014 5:53 PM MDT
To: Brigham Steele - C21902; Andrew Rogers - C15515; Don Perkins - C21824
Subject: RE: Debunking Unwired
Attachments: Unwired_03.pptx

Use this one instead……clearer statements.
Dave

From: David Sroka - C16440
Sent: Wednesday, July 23, 2014 4:16 PM
To: Brigham Steele - C21902; Andrew Rogers - C15515; Don Perkins - C21824
Subject: RE: Debunking Unwired

Thanks for the inputs …….. here is the updated version.

How should we use ?

1) Train FAEs on the issues for them to discuss with customer. Leave the ppt with the customer or not?
2) Send to the customers we just visited….and wait for responses/questions…..sure to create some sparks.
3) Send to sales and let them decide proper usage per customer; support accordingly
4) Other?

I think we had seriously disputed the concept so I think we are justified to send a response based upon what we heard/know/think. Also this is sure to draw out responses that will allow us to better understand the UnWired solution.

I would say 1 and 3 as my preferred approach.

Dave

From: Brigham Steele - C21902
Sent: Wednesday, July 23, 2014 3:37 PM
To: Andrew Rogers - C15515; David Sroka - C16440; Don Perkins - C21824
Subject: RE: Debunking Unwired

More new slides, you may want to clean them up a little with pictures.

From: Andrew Rogers - C15515
Sent: Wednesday, July 23, 2014 11:37 AM
To: David Sroka - C16440; Don Perkins - C21824; Brigham Steele - C21902
Subject: RE: Debunking Unwired

Dave,

EX.
248
C.A. No.17-1194-JDW

I made some minor edits to pages 4 and 5. Feel free to incorporate these into your deck or throw them out.

Regards,
Andrew

From: David Sroka - C16440
Sent: Wednesday, July 23, 2014 11:11 AM
To: Don Perkins - C21824; Andrew Rogers - C15515; Brigham Steele - C21902
Subject: RE: Debunking Unwired

Updated.

Dave

From: David Sroka - C16440
Sent: Wednesday, July 23, 2014 10:22 AM
To: Don Perkins - C21824; Andrew Rogers - C15515; Brigham Steele - C21902
Subject: Debunking Unwired

Here is what I have put together, appreciate thoughts/inputs.

Dave

Dave Sroka
Product Marketing
USB and Networking Group (UNG)
480-972-4464 (office)
602-882-9696 (cell)
David.Sroka@Microchip.com

Microchip Technology Inc.
2355 West Chandler Blvd, MS 3D
Chandler, AZ 85224

USB Spoofing – Media Breakout Box and Carplay®

Implementations and Considerations

RESTRICTED - ATTORNEY EYES ONLY

Aptiv Exhibit 2031 Page 3
Microchip v. Aptiv IPR2024-00495

Standard USB Data Flow: Host

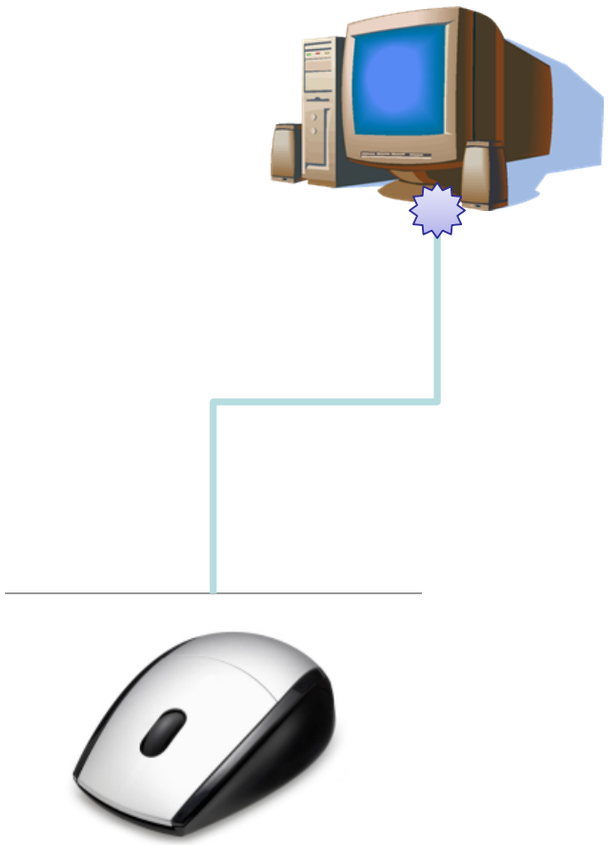

- **Host Owns the Bus**
  - All data originates from Host
  - Device must respond to Host
  - Host can ignore the Device

EX. 248 - Page 4 of 21

RESTRICTED - ATTORNEY EYES ONLY

Microchip_268591

Aptiv Exhibit 2031 Page 4
Microchip v. Aptiv IPR2024-00495

Standard USB Data Flow: Hubs

- **Hubs**
  - Allow more devices to connect to one Host
  - Repeat the Host commands to all ports
  - Translate HS signals to FS and LS
  - Do not allow Device to Device communication

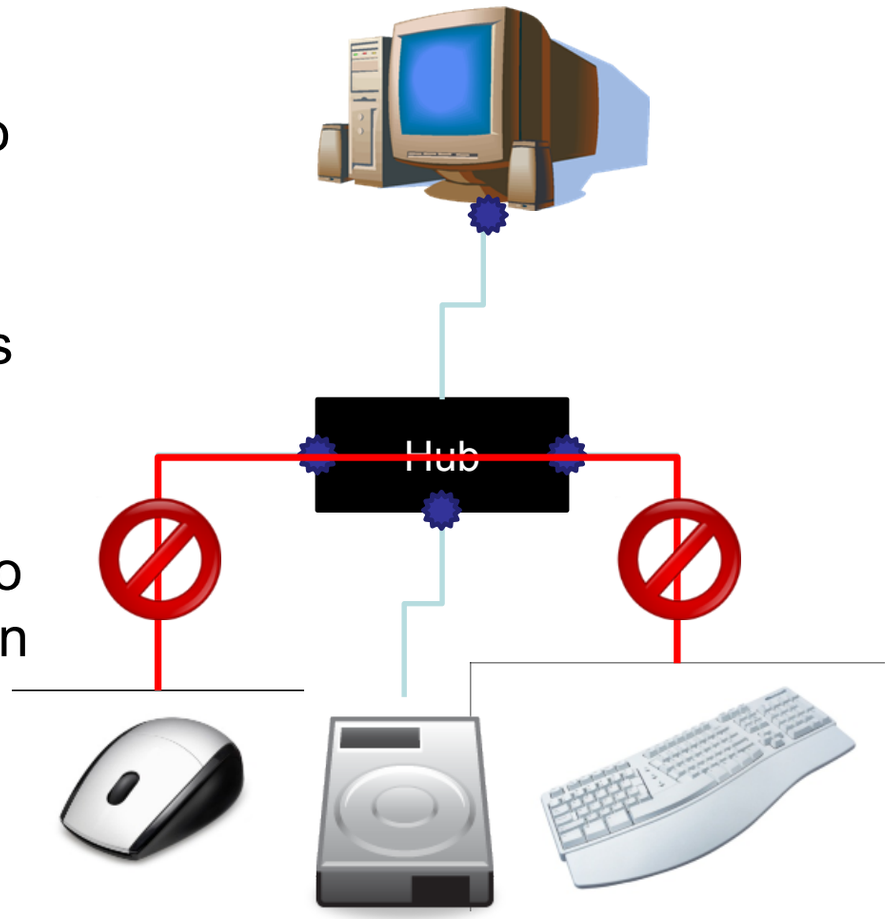

BoB Alternative Approach

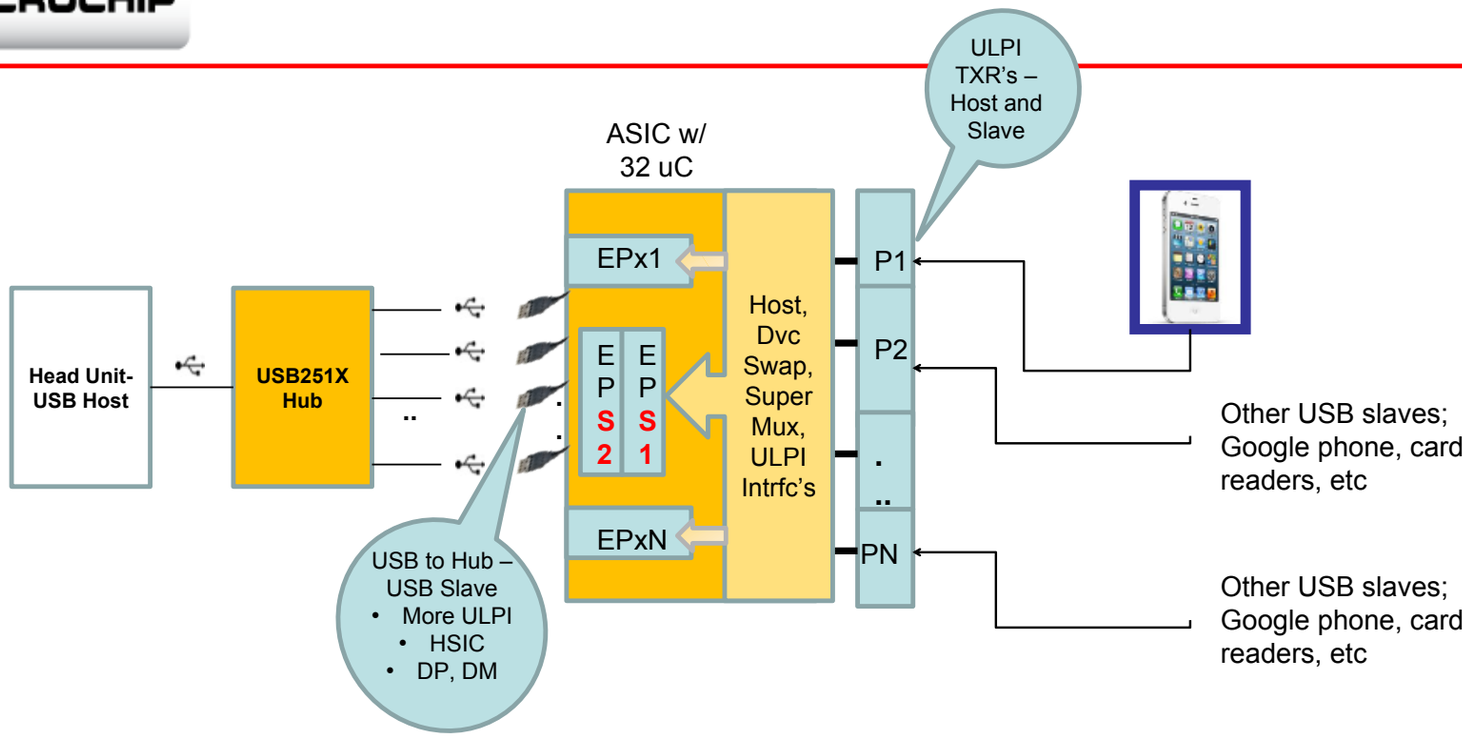

- **Consistent statements heard from multiple customers (Head and BoB makers):**
  - All user ports are Carplay® enabled
    - iPhone begins as a USB device but switches to USB Host when entering Carplay ® mode.
    - Note if the iPhone connects to a standard Hub, the architecture is flawed. Standard Hub downstream ports are always host s. Carplay requires port to be a device (ie. When iPhone is the host).
  - Head Unit is always a USB Host ….translates to two USB Host system
    - All devices connected to other ports still enumerated and accessible to Head Unit (USB Host) while in CarPlay mode.
    - Dedicated lane from iPhone to Head Unit requirement is violated.

Carplay® - Hypothesis

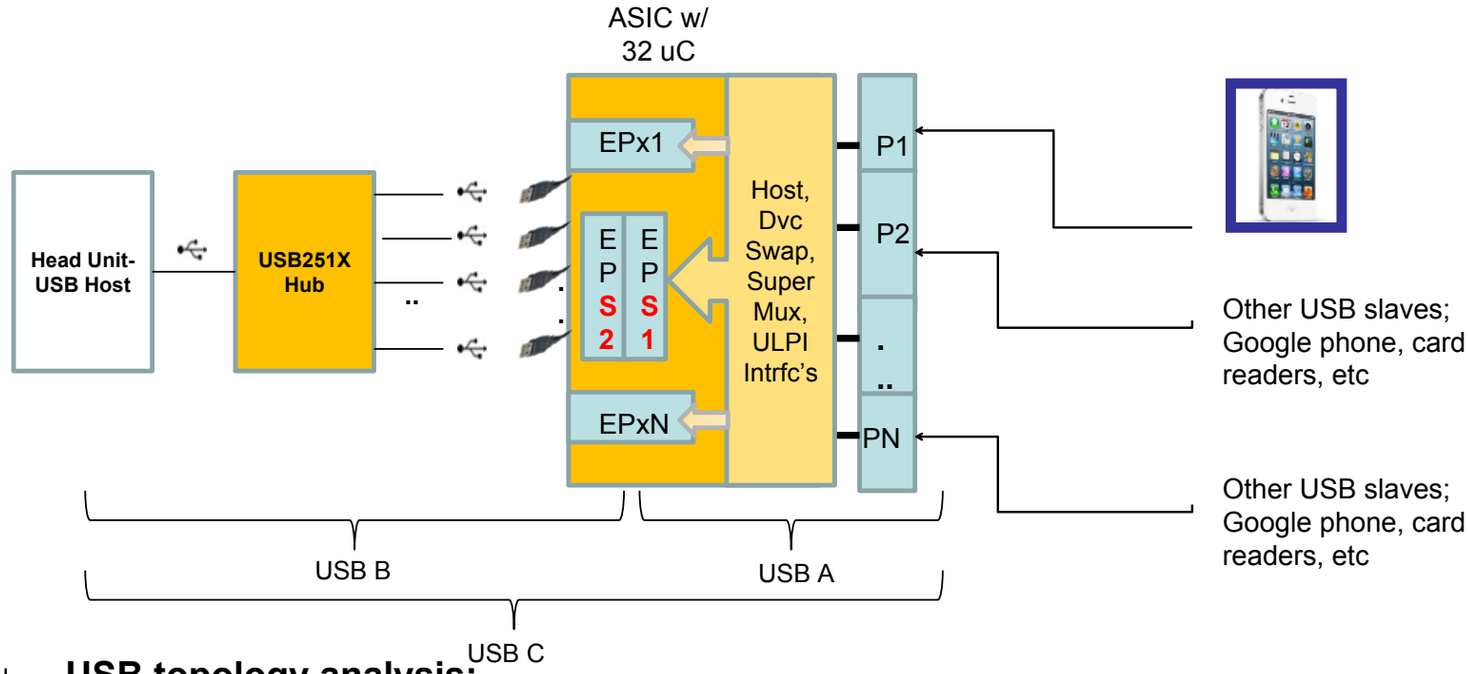

- **USB topology analysis:**
  - Carplay operation is being executed via two, serial USB network transactions
  - EPS1 "spoofed/bridged" to EPS2 and USB transactions reconfigured; twice
    - EPS1 start as a host EP then bridge to EPS2 as an slaveEP…..for iPhone discovery
    - Once discovered by Head Unit EPS2 slaveEP bridges / spoof to another slave EP for interface to iPhone USB host
    - All transaction orientations must be switched/ maintained accordingly
  - Other user ports execute standard USB topology (USBC network) and USB roles
  - Large number of ICs required for solution: Hub, ASIC, multiple ULPI PHY…

“Simple” USB Commands

IN Transaction – Basic transfer of data (Video, Audio etc)

- **Dedicated USB Lane**

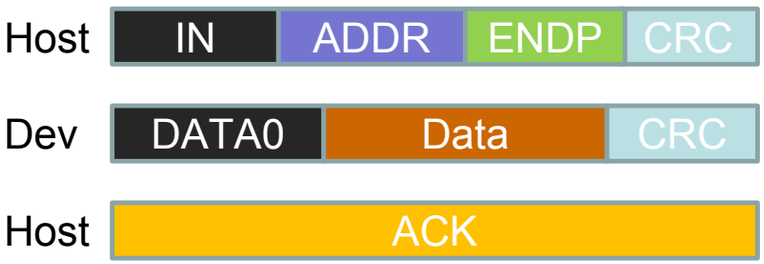

- **Two Host Solution**

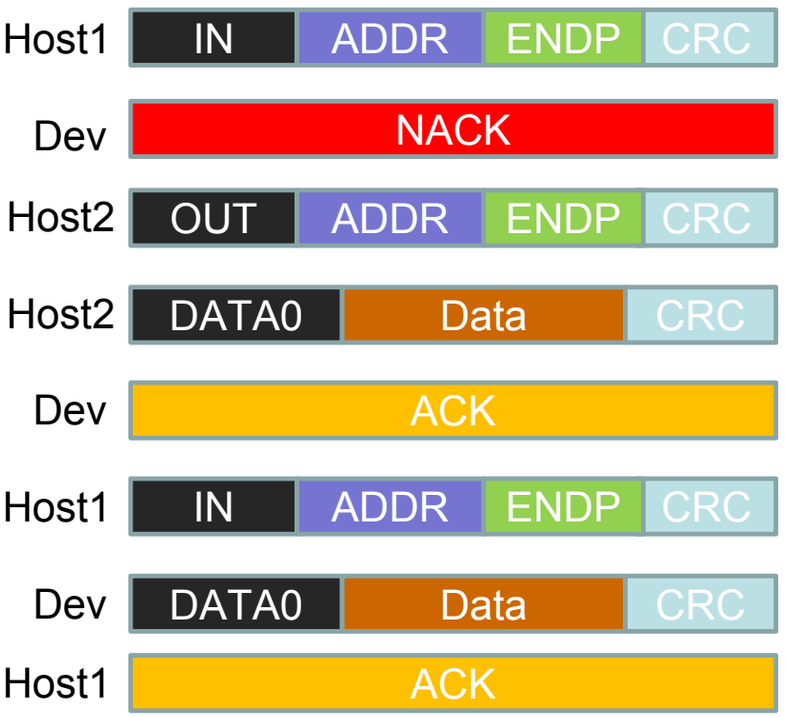

- **Just one simple transaction.**
- **High risk for error with 2 Hosts**

Carplay® - Considerations

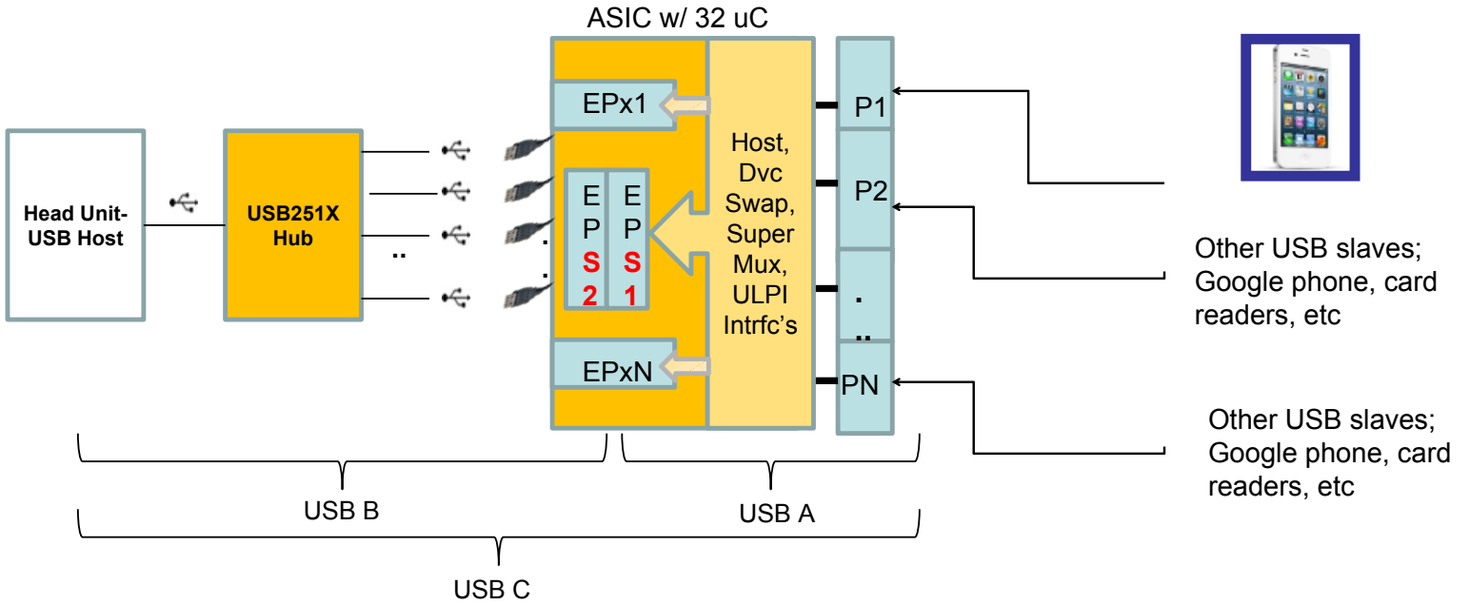

- **This is a custom solution….not standard USB:**
  - Carplay path will demonstrate degraded performance due to bridging delay and serial USB networks
  - Other USB devices (Google) will present to host faster and provide higher though-puts
  - Custom driver is necessitated….will it need field updates….can it cover entire USB solution space ?
  - When running composite apps at high bandwidth (video, isoc, etc) can time-outs occur between the two serial networks (HID, other?)
  - Host / device transaction swaps similar to Philips ISP1261, IP / indemnification issues?
  - Spoofing is similar to Man-in-the-Middle operation…….security impact ?
    - Allowed by Car Play specification ?
    - Car Play authentication?

EX. 248 - Page 9 of 21

RESTRICTED - ATTORNEY EYES ONLY **Microchip_268596**

Aptiv Exhibit 2031 Page 9
Microchip v. Aptiv IPR2024-00495

More Dual Host Dangers

- **Host 1**
  - Video is high priority
  - Audio is medium priority
  - HID is lower priority
    - Button
    - Touch Screen
- **Host 2**
  - Video is high priority
  - Mass Storage Requires long packets
  - Audio is medium priority
  - HID is low priority
    - Button
    - Touch Screen

Possibility of service mismatch as 2 hosts independently polling, executing device transactions. Host in head unit will dictate data-flow (polling of the four hub end-points) and is impacted by system micro-controller operational bandwidth. But Apple Host dictating data-flow to spoof endpoints and may overflow buffers, incur time-outs if not serviced, and result in poor performance.

USB2.0 Hub Controllers

RESTRICTED - ATTORNEY EYES ONLY

Aptiv Exhibit 2031 Page 11
Microchip v. Aptiv IPR2024-00495

Implementing with Compliant USB, Standard Topologies

- **USB is a master slave topology**
  - There can be only “one” Host at a time.
  - There can be up to 127 devices
- **Each device (or Hub) in the USB “Lane” has an End Point**
  - An address for the Host to communicate directly with that device (or hub)
- **Our USB4604 hub has multiple end points**
  - Port 0 which is required by USB (Hub host facing port)
  - ***5th End Point*** which is our Microcontroller device (UCH)

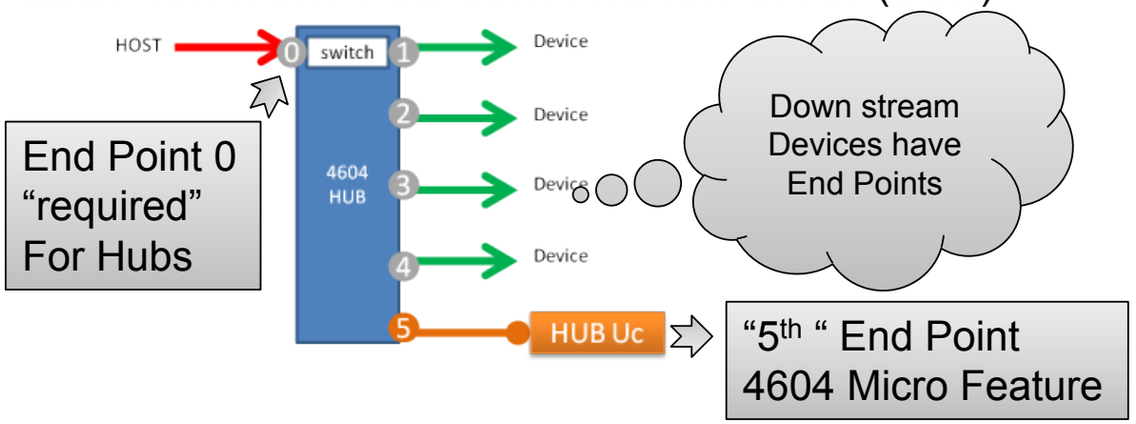

© Date: February 18, 2019

RESTRICTED - ATTORNEY EYES ONLY
Microchip_268599
Aptiv Exhibit 2031 Page 12
Microchip v. Aptiv IPR2024-00495

The USB2 Controller HUB (UCH2)

- **What is a USB Controller Hub (UCH)?**
  - USB HUB Function (2, 3, 4 port)
  - *And* End Point with microcontroller
  - OTP Flash support for configuration
- **Embedded Microcontroller Functions**
  - HUB configuration during startup
  - "OTP Flash" Configuration
  - GPIO Bridging for HOST
  - Executes custom features
- **Features Enabled by Micro**
  - Enables "direct I/O bridging"
    - SMBus, GPIO, UART, SPI
  - Allows DCP charging when host not present
  - Allows customer specific functionality

UCH2 = USB2 Controller HUB

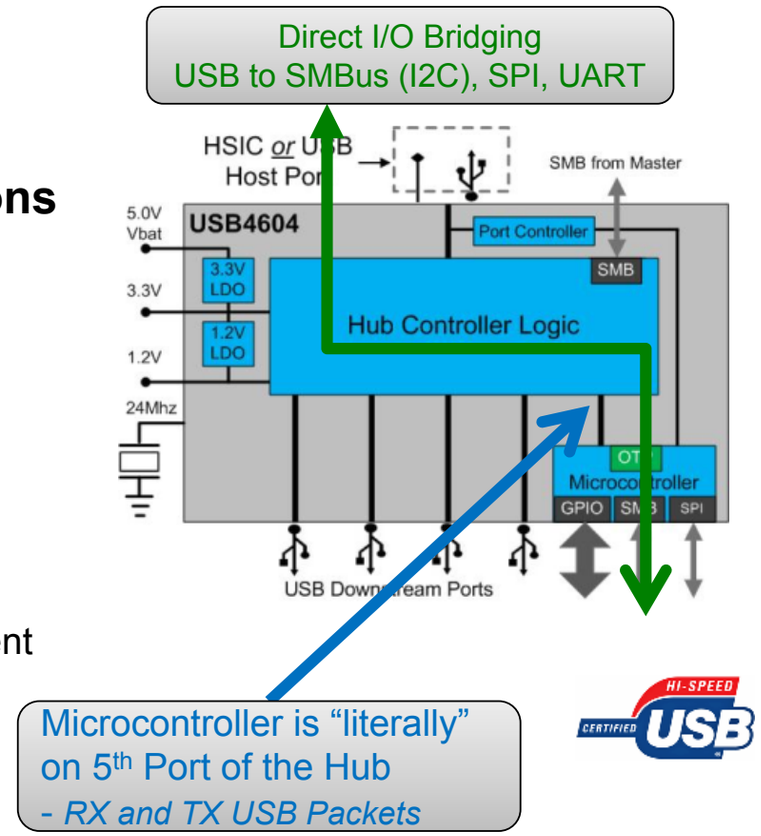

What is “Flex Connect”?

- “Flex Connect” is a simple way to reverse the USB Lane
- “Flex Connect” supports “role reversal” where one system wants to temporarily become the USB Host
- Port 0 and Port 1 actually “switch” internally on the die
  - Both Hubs pass USB Compliance
- All devices will “move” to the “then current” Host

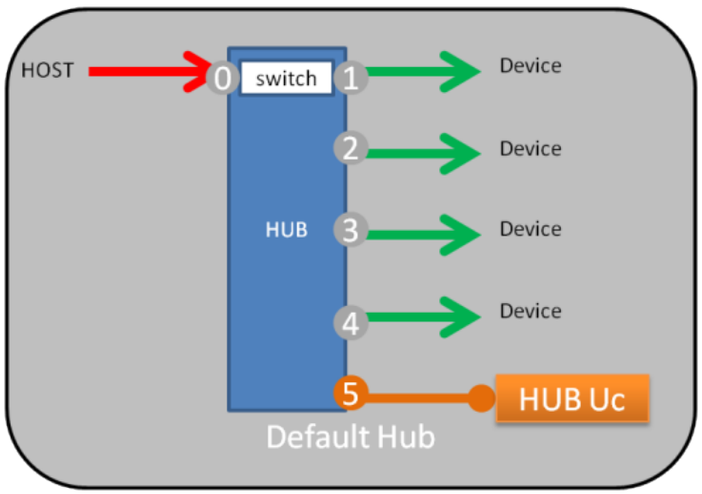

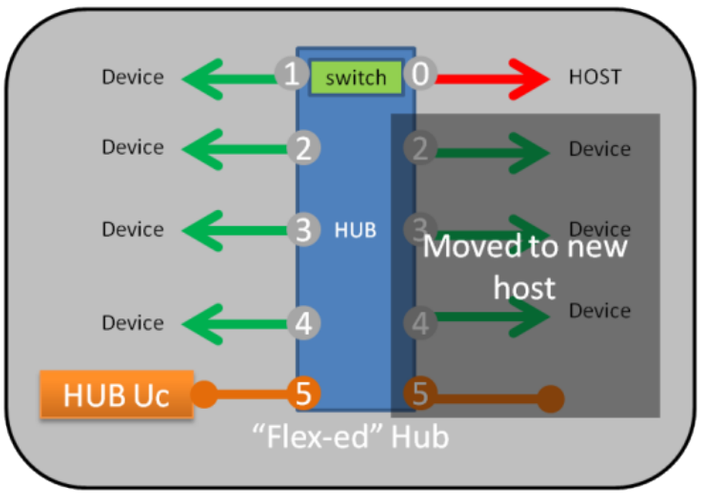

© Date: February 18, 2019

RESTRICTED - ATTORNEY EYES ONLY
Microchip_268601
Aptiv Exhibit 2031 Page 14
Microchip v. Aptiv IPR2024-00495

Controlling the “Switch”

- **Three ways**
- Using I2C lane from local SOC

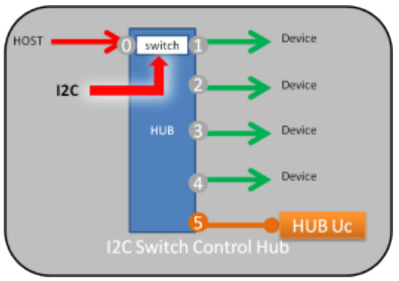

- Using GPIO from cable or local SOC

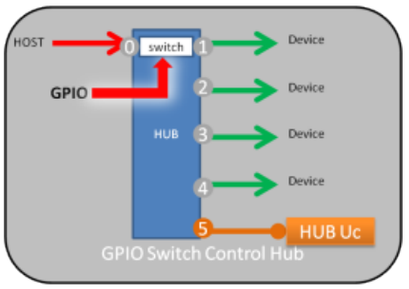

- Using software and the “5th end point”

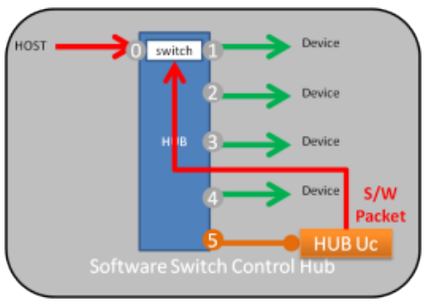

© Date: February 18, 2019

RESTRICTED - ATTORNEY EYES ONLY
Microchip_268602
Aptiv Exhibit 2031 Page 15
Microchip v. Aptiv IPR2024-00495

System Implications

- When you switch - “all device ports” will switch to new host and re-enumerate
- Host / SOC can set hub to “turn off” specific hub ports in the command word
- Carplay® wants “exclusive” connectivity to head unit

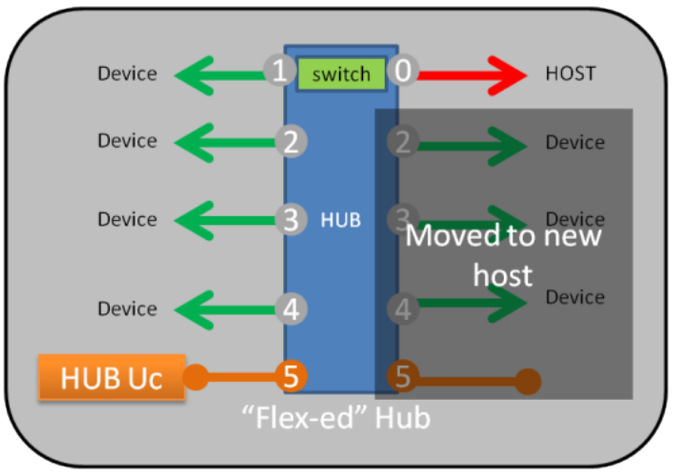

© Date: February 18, 2019

RESTRICTED - ATTORNEY EYES ONLY
Microchip_268603
Aptiv Exhibit 2031 Page 16
Microchip v. Aptiv IPR2024-00495

Advanced Concepts - PDC

- **“Port Disconnect Charging”**
  - When you “Flex” the hub the CMD word allows for hub ports to be disconnected from new host
  - What do you do with disconnected hub ports?

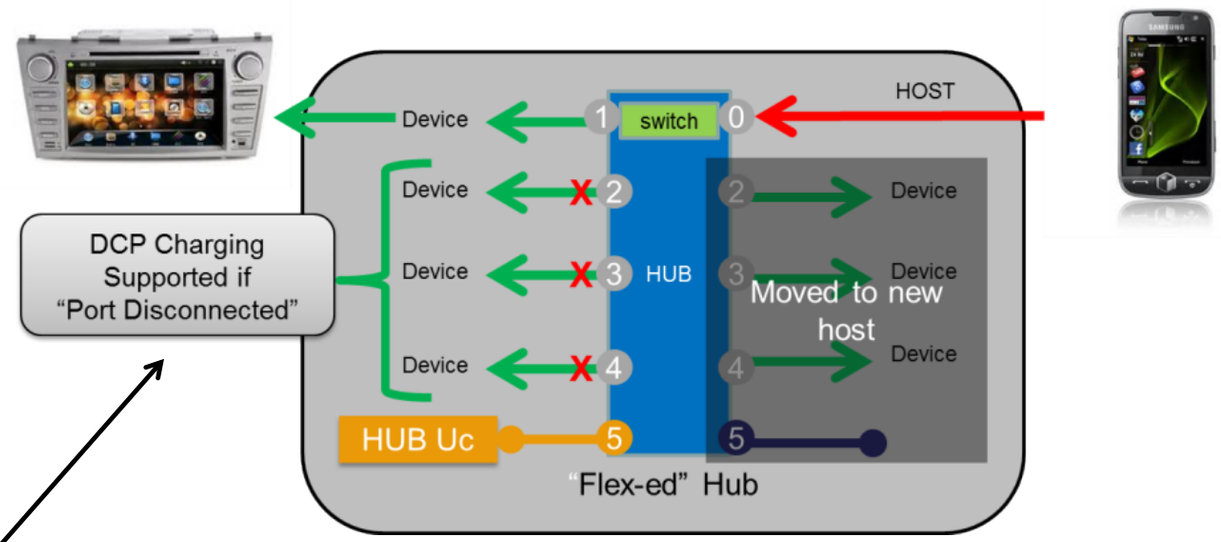

Charge your friends iPhone/iPad

Microchip Confidential

“Port Disconnect Charging”

- **USB84604/USB5734** Required to support “Port Disconnect Charging” (USB Controller Hub architecture)
- “Any” downstream port can be **PDC** w/CMD word

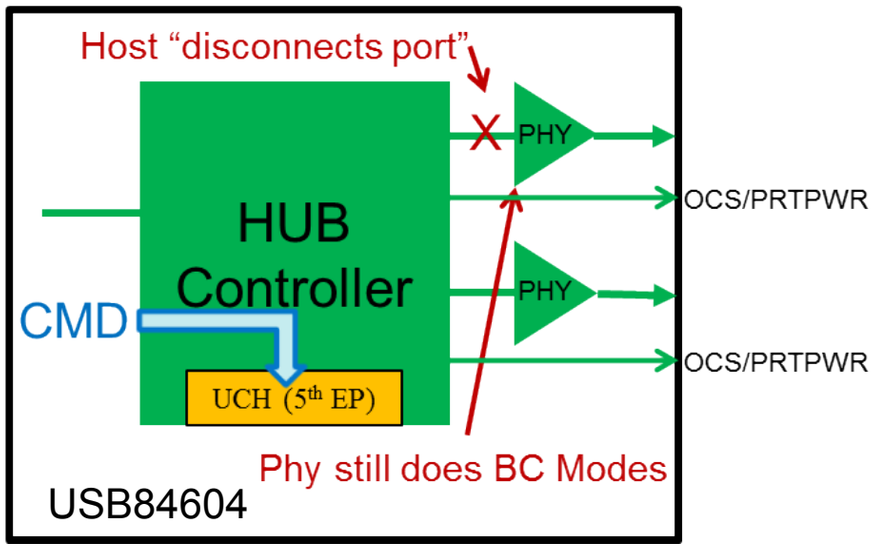

Microchip Confidential

© Date: February 18, 2019

RESTRICTED - ATTORNEY EYES ONLY
Microchip_268605
Aptiv Exhibit 2031 Page 18
Microchip v. Aptiv IPR2024-00495

Advanced Concepts - HDD

- **How do you "Un Flex" when Smart Phone is removed?**
  - USB4604 (even with Vbus always present) can detect the loss of "host" connection, we do this for battery charging applications
  - 4604 micro will return to "non Flex-ed" and re-enumerate with host
  - SOC must do the same
  - Recommend VBus provided from the Head Unit to BoB
  - Provides "Hostile Take Over" by Head Unit

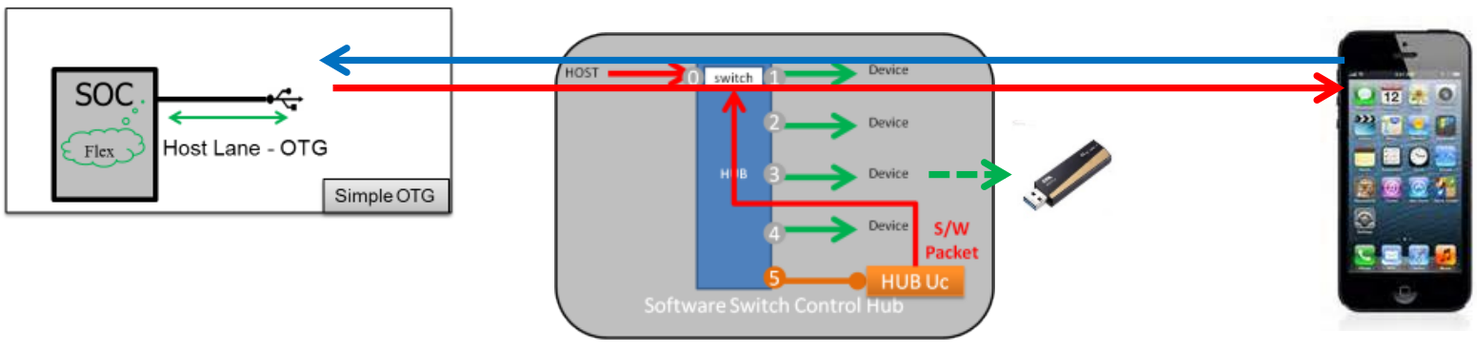

Microchip Confidential

© Date: February 18, 2019

RESTRICTED - ATTORNEY EYES ONLY
Microchip_268606
Aptiv Exhibit 2031 Page 19
Microchip v. Aptiv IPR2024-00495

Typical Break Out Box Design

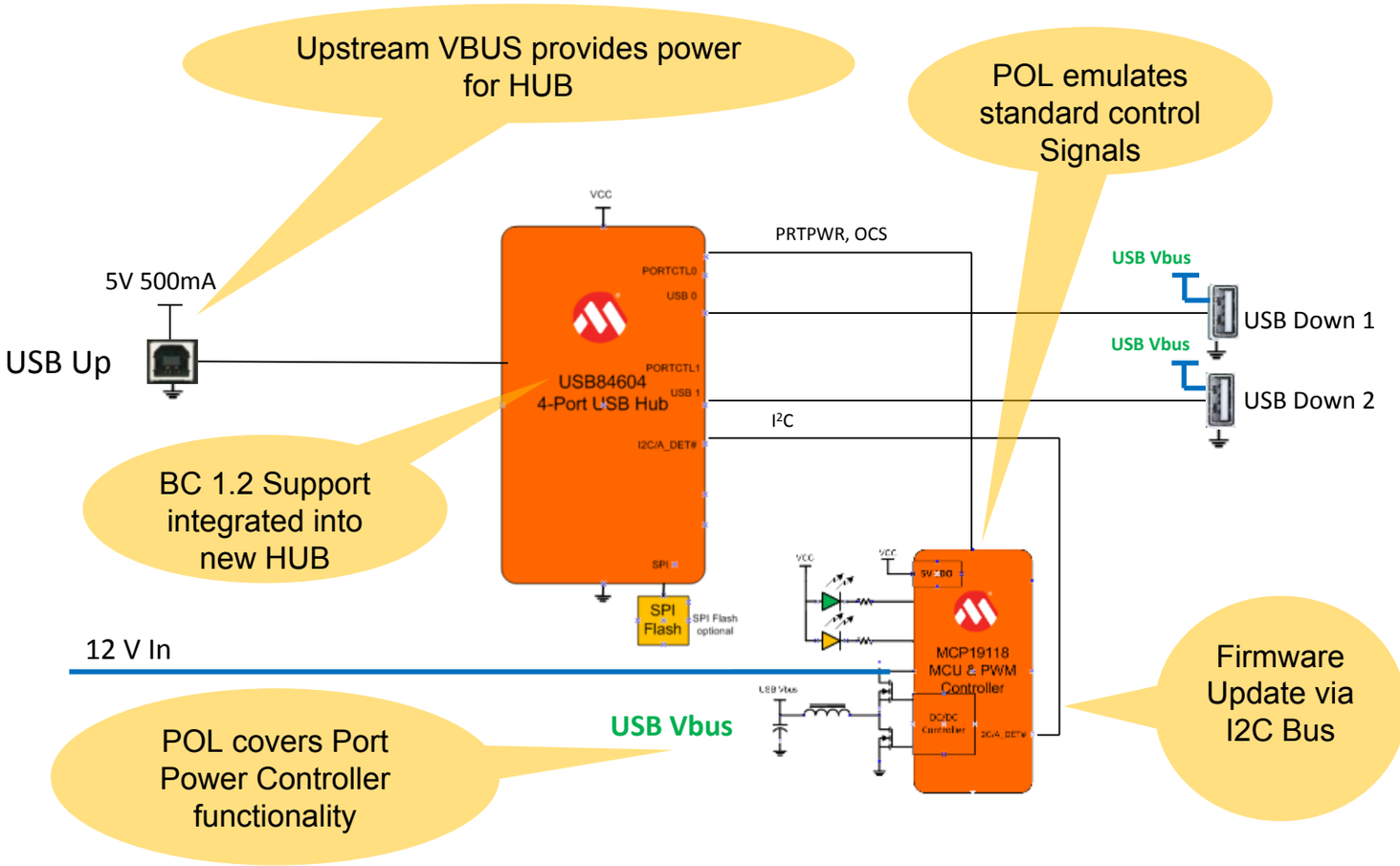

Summary

- **Spoofed USB**
  - Architecture unknown
  - Speed/operational degradation
  - Carplay® compliant ?
    - Man-in-the-Middle
    - Authentication
  - Custom host driver required
    - Field updates likely
  - Unknown risk, wide range of cost of ownership
- **Standard USB**
  - Architecture known
    - Standard USB… compliant
    - Production/Automotive NOW
  - Apple approved demo
  - Standard drivers
    - USB
    - Apple
  - Automotive features; BC profiles, phone detach, head unit control
  - No risk, understood cost of ownership

© Date: February 18, 2019

RESTRICTED - ATTORNEY EYES ONLY

Aptiv Exhibit 2031 Page 21
Microchip v. Aptiv IPR2024-00495