From: David Sroka - C16440
Sent: Monday, January 5, 2015 9:58 AM MST
To: Santosh Shetty - C21884
CC: Mark Bohm - C21577
Subject: RE: USB Mullti Host Bridge Questions.

The diagram is our creation / interpretation of what Unwired is doing, and has not been confirmed.

This being said, in the Product Brief, I had put in a hub implementation and compound device implementation as options, and when we reviewed with Chrysler they definitely wanted the hub implementation. Note they have seen the Unwired solution. Separately we did receive information from sales about 2 months ago that Unwired solution would still need USB chips, namely, a hub and ULPI transceiver.

Lastly I think that Unwired has a 2 step approach, one with an FPGA and then the final, lower cost solution which would be an ASIC. This because Chrysler has said that they will not go to production with an FPGA solution, which means someone else is. Tecvox mentioned that GM is going to production with a FPGA. This because GM only has a USB Host port available on the head unit.
Dve

From: Santosh Shetty - C21884
Sent: Monday, December 22, 2014 8:46 AM
To: David Sroka - C16440
Cc: Mark Bohm - C21577
Subject: USB Mullti Host Bridge Questions.

Hello Dave,

I had a few questions regarding the unwired solution PPT you send.

EX.
268
C.A. No.17-1194-JDW

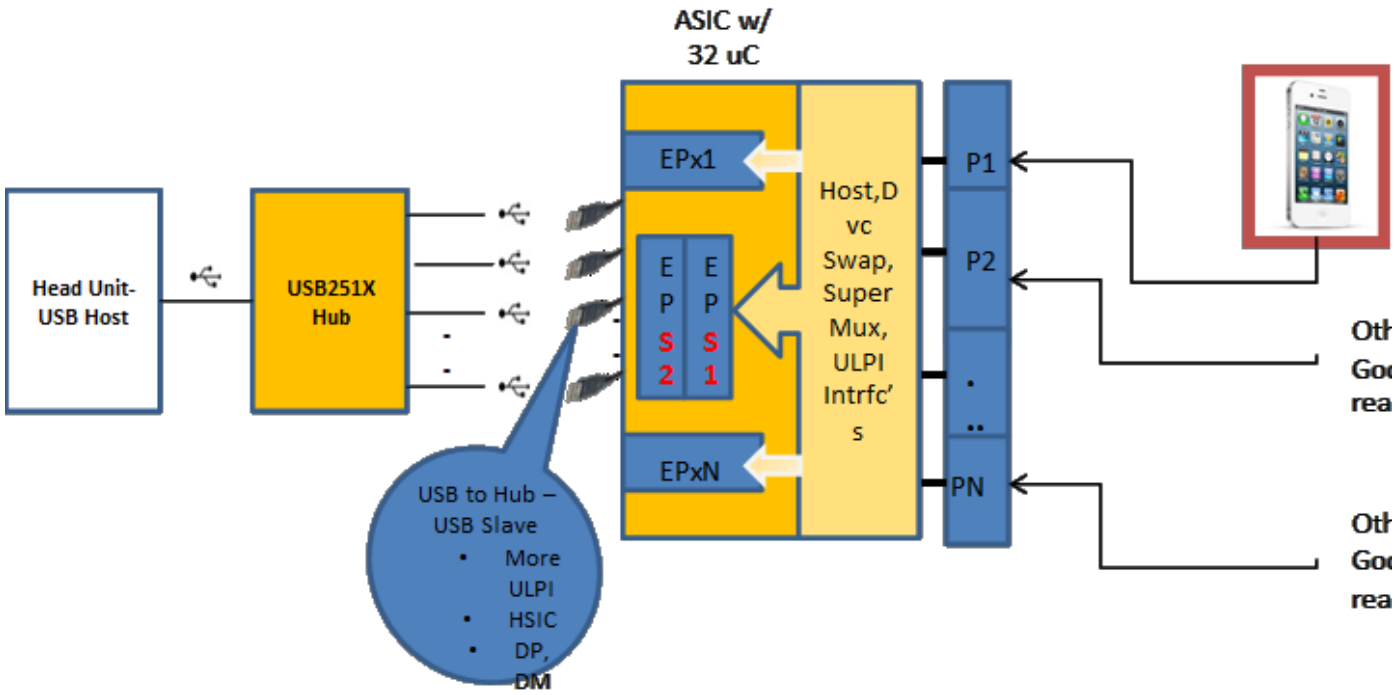

a) The Diagram above shows a USB HUB required for this solution to work , Is that the case .

b) P1/P2 – PN are shown as multiple devices connected to the ASIC, Is there list of USB device types that is supported ? or is it generic enough to support any USB device connected to one of the non-CAR play ports . What about Isochronous devices ?

Would be nice to understand, my current assumption is they only support a set of predefined USB devices ..

Thanks

Best Regards
Santosh Shetty