From:	Mitchel Obolsky - C08039
Sent:	Monday, January 26, 2015 4:05 PM MST
To:	Steve Sanghi - C07251; Ganesh Moorthy - C11350
Subject:	Initial Proposal for Tecvox (Chrysler and Fiat, too)
Attachments:	MHDC_Targets_02.pptx

The attached slides are the heart of the discussion with Tecvox. Dave Sroka and Eric Kawamoto, will be in Huntsville. The purpose of the meeting is to confirm alignment between our product concept and TecVox's requirements as we continue to develop a detailed proposal

There have been about 20 hours of internal Microchip meetings in the last two weeks, and many more are needed to complete the product definition. UNG intends to develop the product to meet the market needs, which we hope will include Tecvox's needs, too.

- We now believe it is technically feasible to develop a solution that competes with Unwired's and also can serve the European car manufacturers whose needs differ slightly
- We have a cost estimate that is reasonable, but it likely requires we move the product development to 65nm
- We do not have a schedule that meets Tecvox's desired timeline, given the large complexity of this program, but is likely the best we can do
- Next step is to test our thought process with our target customers: Tecvox and Chrysler to start; Ford, Audi and more to follow

The slides attached are a brief overview of what will be a blend of Business and Technical discussion tomorrow. It contains a preliminary set of features, development timeline, and product costs(ASP). It will likely take until the end of March to fully define the product and timeline, and likely two years or more to reach production if the Business Plan says we should proceed with this project.

Let me know if you have questions, or would like to discuss.

Sincerely,

Mitch Obolsky

Vice President,
MCU16 Division /UNG (USB & Networking Group)
Microchip Technology/SMSC
Work: (480) 792-7684
Cell: (602) 570-3193

EX.
275
C.A. No.17-1194-JDW

Multi-Host Device Controller

January 24, 2015

RESTRICTED - ATTORNEY EYES ONLY

Aptiv Exhibit 2034 Page 2
Microchip v. Aptiv IPR2024-00495

Multi-Host Device Controller (MHDC)

- **Status**
  - Architecture resource allocated
  - Functional block diagram complete
    - Engineering block descriptions progressing
    - Software model confirmed
  - Feature-set, solution-space defined
- **Next Steps**
  - Feature set trade-offs and schedule impact
  - IP creation and re-use decisions
  - Functional departmental analysis

EX. 275 - Page 3 of 6
RESTRICTED - ATTORNEY EYES ONLY
Microchip_276212
Aptiv Exhibit 2034 Page 3
Microchip v. Aptiv IPR2024-00495

MHDC Targets

- **Key milestone targets:**
  - Detailed Schedule: March 31, 2015
  - Initial stream-out target: 3Q, 2016
  - Engineering samples target: 4Q, 2016
- **Target ASP: $3.50 at 500KU/year**

RESTRICTED - ATTORNEY EYES ONLY

Multi-Host Device Controller

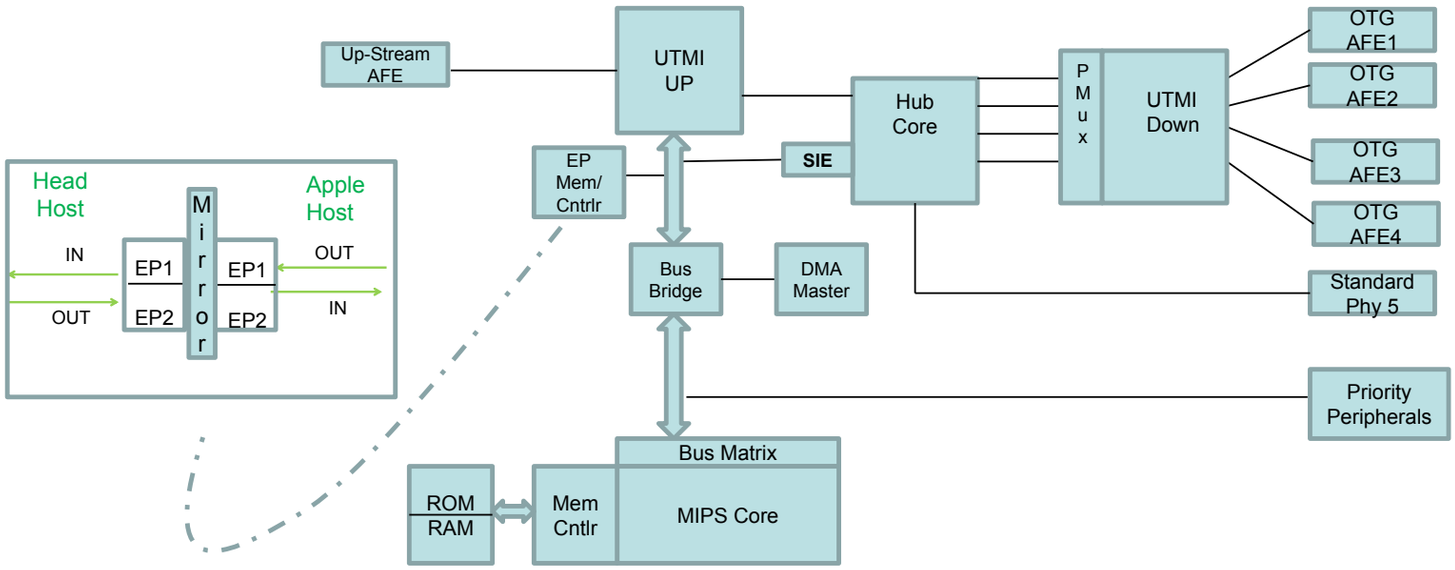

- Single upstream port
- 5 downstream ports; 4 CarPlay capable, 1 standard (CR or hub expansion)
- Priority peripherals – I2C, SPI, UART, I2S

EX. 275 - Page 5 of 6
RESTRICTED - ATTORNEY EYES ONLY
Microchip_276214
Aptiv Exhibit 2034 Page 5
Microchip v. Aptiv IPR2024-00495

LINUX DRIVER USB DEVICE TUNNEL

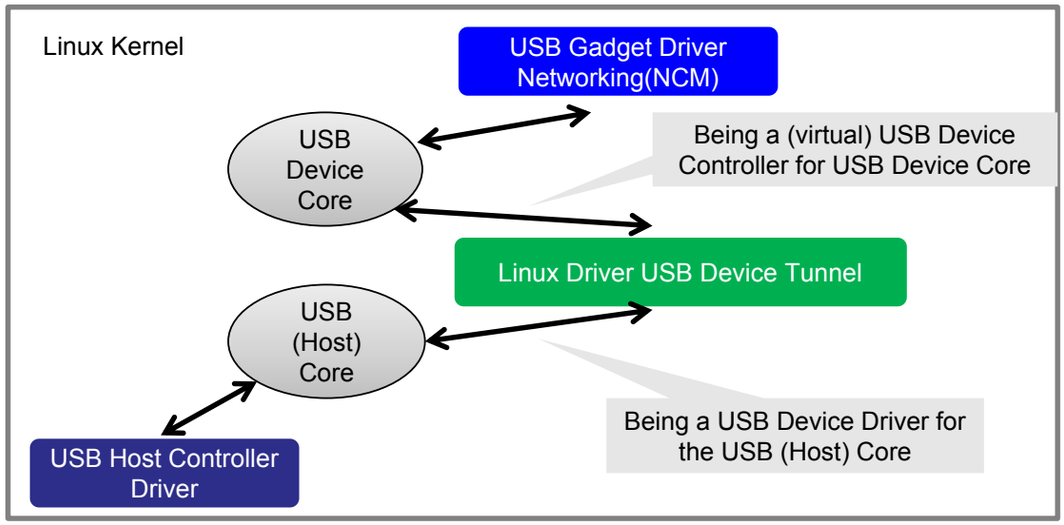

- Interfaces to the USB (Host) Core as a USB Device
- Interfaces to the USB Device Core as a (virtual) USB Device Controller
- Linux Gadget Drivers sees a normal USB Device Controller-> no modifications needed in the CDC NCM Driver used by Carplay
- Linux Device Tunnel Driver has no dependencies to specific Host Controllers

RESTRICTED - ATTORNEY EYES ONLY