UNITED STATES PATENT AND TRADEMARK OFFICE

BEFORE THE PATENT TRIAL AND APPEAL BOARD

MICROCHIP TECHNOLOGY INC.
Petitioner,

v.

APTIV TECHNOLOGIES AG
Patent Owner.

Patent No. 9,645,962

Inter Partes Review No. IPR2024-00229

SUPPLEMENTAL DECLARATION OF HENRY HOUH

I. INTRODUCTION

1. I have been retained by counsel for Aptiv Technologies AG ("Aptiv" or "Patent Owner") in the following matters:

Case No. IPR2024-00228 (Patent No. 9,619,420)
Case No. IPR2024-00029 (Patent No. 9,645,962)
Case No. IPR2024-000230 (Patent No. 11,176,072)
Case No. PGR2024-00011 (Patent No. 11,681,643)

2. I have been asked to opine on the patentability of the challenged claims in U.S. Patents Nos. 9,619,420 (the "'420 Patent"), 9,645,962 (the "'962 Patent"), 11,176,072 (the "'072 Patent"), and 11,681,643 ("the '643 Patent") (collectively the "Challenged Patents").

II. QUALIFICATIONS

3. I am currently employed by Houh Consulting Inc. as an independent technical consultant. I also founded Einstein's Workshop, a company that provides supplemental science, technology, engineering, and mathematics ("STEM") education to children of all ages.

4. My professional career has spanned more than 25 years. I previously provided my CV as Exhibit A to my declaration (EX2001). During these years I have gained extensive experience in communications systems, networking, distributed systems, protocols, and embedded systems.

5. I earned my Ph.D. degree in Electrical Engineering and Computer Science in February 1998 from the Massachusetts Institute of Technology (MIT). I also received a Master of Science (M.S.) in Electrical Engineering and Computer Science (February 1991), a Bachelor of Science in Electrical Engineering and Computer Science (June 1989) and a Bachelor of Science in Physics (February 1990) from MIT.

6. In 1987, I worked at AT&T Bell Laboratories as part of a five-year dual degree program at MIT. At Bell Labs, I first worked in a group supporting core telephony switching functions, then later I joined the Optical Computing group. In graduate school, I joined the Advanced Network Architecture (ANA) group at the Laboratory for Computer Science (LCS) at MIT, then headed by Prof. David Tennenhouse and senior research scientist David Clark. Dr. Clark is generally considered to be one of the fathers of the Internet Protocol, having acted as chief protocol architect for the development of the Internet. My research and work experience in distributed systems, networking, and network architecture dates back to around 1991 when I joined ANA.

7. Later, when Prof. Tennenhouse formed his own research group, the Telemedia Network Systems (TNS) group, I joined TNS. The TNS group built a high-speed gigabit network and applications which ran over the network, such as remote video capture, processing, and display on computer terminals. I designed

the core networking hardware and software, including the high-speed data links and the device drivers for the network interface cards.

8. TNS's research activities focused on high speed networking and the types of applications that require increased network bandwidth and computing power. One of the applications I investigated was live streaming video, and real-time processing of such video. My work was focused around the transport, switching, and routing of data (including video and audio streams), and the integration of TNS's network into the computing environment, including the protocols, IP/ATM integration, operating system software and device drivers.

9. While I was an undergraduate senior, I became a teaching assistant (normally a role at MIT reserved for graduate students) for a core electrical engineering/computer science course, Computation Structures. Later, as a graduate student, I became head teaching assistant for the course. After graduating, I was invited to guest lecture and work with several MIT courses, including in circuit design and web application development. I also worked with a team of students mentoring them on their web application development project.

10. I defended and submitted my Ph.D. thesis, titled "Designing Networks for Tomorrow's Traffic," in January 1998. As part of my thesis research, I analyzed local-area and wide-area flows to show a more efficient method for

routing packets in a network, based on traffic patterns at the time. My thesis also addressed real-time streamed audio and video.

11. From 1997 to 1999, I was a Senior Scientist and Engineer at NBX Corporation, a start-up that made business telephone systems for streaming packetized audio over data networks instead of using traditional telephone lines. NBX was later acquired by 3Com Corporation, and the phone system I worked on at NBX was widely used by numerous businesses. As part of my work at NBX, I designed the core audio reconstruction algorithms for the telephones, as well as the packet transmission algorithms. I also designed and validated the core packet transport protocol used by the phone system. The NBX system also supported TAPI, the Telephony Application Programming Interface, thus allowing other computer programs to integrate with our system telephony features.

12. From 1999-2004, I was employed by Empirix or its predecessor company, Teradyne. Empirix was a leader in test tools for telecommunications protocols and systems, providing functional testing tools as well as load testing tools. From 2000-2001, I conceived and built a test platform for testing Voice-over-IP (VoIP). The first application on this new test platform was a cloud emulator for simulating the effects of transmitting VoIP over a busy network.

13. I worked at BBN Technologies from 2004 to 2009. BBN Technologies, formerly known as Bolt, Beranek and Newman, was a pioneer of the

Internet and a long-established leader in speech recognition and natural language processing. BBN received the first contract to build components of a packet switched network as part of the ARPANET, a U.S. Department of Defense effort funded through the Advanced Projects Research Agency (ARPA). While this effort preceded my time at BBN by many years, BBN continued to maintain a strong presence in network research and development, including in wireless networking, device discovery, and protocols for a "body area network."

14. In 2012, I founded Einstein's Workshop, a science, technology, engineering, and math enrichment program for kids of all ages. The Workshop teaches programming, robotics, "making" (akin to creating, building, and tinkering), engineering, 3D CAD, mobile application development and many other subjects. Einstein's Workshop teaches a variety of programming classes from Scratch to Java. We also teach game development for mobile devices, for which I evaluated a number of mobile application programming environments. I also developed a robotics programming class in which robots could be programmed to be autonomous or under direct wireless control.

15. Einstein's Workshop also created and developed BlocksCAD, a 3D CAD system for kids and adults. BlocksCAD is used world-wide and has more than 110,000 registered users and 350,000 total users. BlocksCAD is being used in maker spaces worldwide and is integrated into school curriculum in various school

systems in the U.S. at elementary, middle and high school levels. BlocksCAD was spun out into a separate company that was part of the LearnLaunch business accelerator program for educational technologies, MIT Playlabs 2018 and the 2018 MassChallenge Boston Cohort. BlocksCAD also received Phase 1 SBIR funding.

16. I have been awarded several United States patents, and I have several patent applications pending, including U.S. Patent No. 6,967,963, which originated in the work I did at NBX, and is titled "Telecommunication method for ensuring on-time delivery of packets containing time-sensitive data." A full list of my U.S. Patents, European Patents and Patent Publications is included in my attached C.V.

17. Additional details of my work experience, awards and honors, and publications that may be relevant to the opinions I am expressing are set forth in my C.V. attached as Exhibit A to the end of my declaration.

III. COMPENSATION

18. I am being compensated for my time at my standard consulting rate of $820/hr. I am also being reimbursed for expenses that I incur during my work. My compensation does not depend on the substance of my opinions or the outcome of any proceeding involving the Challenged Patents. I have no financial interest in the outcome of this matter or in any litigation involving the Challenged Patents.

IV. MATERIALS CONSIDERED

19. I considered the following materials, amongst other things, in preparing this declaration.

Exhibit No.	Description
1001	U.S. Patent No. 9,460,037 ("'037 Patent")
1002	Patent Prosecution History for U.S. Patent No. 9,460,037
1003	U.S. Patent No. 9,619,420 ("'420 Patent")
1004	Patent Prosecution History for U.S. Patent No. 9,619,420
1005	U.S. Patent No. 9,645,962 ("'962 Patent")
1006	Patent Prosecution History for U.S. Patent No. 9,645,962
1007	U.S. Patent No. 10,545,899 ("'899 Patent")
1008	Patent Prosecution History for U.S. Patent No. 10,545,899
1009	U.S. Patent No. 11,176,072 ("'072 Patent")
1010	Patent Prosecution History for U.S. Patent No. 11,176,072
1011	U.S. Patent No. 11,681,643 ("'643 Patent")
1012	Patent Prosecution History for U.S. Patent No. 11,681,643
1013	Declaration of Eric Welch
1014	U.S. Patent Publication No. 2006/0206650 ("Chang")
1015	U.S. Patent Publication No. 2009/0268743 ("Chang II")
1016	U.S. Patent Publication No. 2004/0019732 ("Overtoom")
1017	U.S. Patent Publication No. 2006/0195625 ("Hesse")
1018	*Universal Serial Bus Specification,* Revision 2.0, April 27, 2000 ("USB 2.0 Specification")
1022	*On-The-Go and Embedded Host Supplement to the USB Revision 2.0 Specification,* Revision 2.0 version 1.1a, July 27, 2012 (the "OTG Supplement")
1029	U.S. Patent No. 8,447,598 ("Chutorash")
1060	Fairchild Semiconductor FSUSB63 3:1 High-Speed USB 2.0 Switch / Multiplexer, dated November, 2010
1063	Maxim 4989 Datasheet (USB 2.0 Hi-Speed 2-of-4 Crosspoint Switch), dated August 2008
1064	Cypress Semiconductor AN96527 – Designing USB Type-C Products Using Cypress's CCG1 Controllers, dated June 3, 2015
1068	Fairchild Semiconductor FSUSB30 Low-power, Two-Port, High-Speed USB2.0 Switch, dated January 2007
1069	The ART of Electronics, P Horowitz and W. Hill, Cambridge

	University Press, 2nd Edition (1989)
1071	Fairchild Semiconductor FSA880 / FSA881 – USB Port 2:1 Switch with Accessory and Charger Detection, dated November 2011
1075	Joint Claim Construction Statement (Dkt. No. 115), dated December 6, 2023 in Aptiv Technologies AG, v Microchip Technology Inc., Case No. 1:23-cv-00307-JDW (D. Del.)
2002	Trial Transcript Excerpts, *Microchip Tech. Inc. v. Aptiv Servs. US, LLC*, No. 17-cv-1194 (D. Del. Apr. 6-13, 2022) – Testimony of Mitch Obolsky
2003	Trial Transcript Excerpts, *Microchip Tech. Inc. v. Aptiv Servs. US, LLC*, No. 17-cv-1194 (D. Del. Apr. 6-13, 2022) – Testimony of Robert Voto
2004	Complaint, *Aptiv Technologies Ltd. v. Microchip Technology, Inc.*, No. 23-cv-307-JDW (DED).
2005	Trial Exhibit No. 58 – Jun. 18, 2014 Mark Orlosky and Brigham Steele Email Chain re: CarPlay and forced DCP to external ports
2006	Trial Exhibit No. 62 – Oct. 1, 2014 Stefan Saenger, Chris Behal, and Ray Kamps Email Chain re: CarPlay - Fiat
2007	Trial Exhibit No. 66 – Nov. 26-Dec. 1, 2014 David Sroka, Eric Kawamoto, and Sal Canu Email Chain re: Media Hub Interim Update
2008	Trial Exhibit No. 246 – Jul. 20, 2014 Don Perkins Email re: UNG Detroit Sales Meeting and Training July 15 – 18
2009	Trial Exhibit No. 252 – Aug. 11, 2014 David Sroka, Don Perkins, Sal Canu Email Chain re: CarPlay compliance Strategy
2010	Trial Exhibit No. 262 – Dec. 2, 2014 Sal Canu Email re: Microchip Position for the Thursday Chrysler Meeting
2016	Robert Dezmelyk Declaration in Support of Microchip's Responsive Claim Construction Brief, *Aptiv Technologies AG v. Microchip Technology Inc.*, No. 23-cv-307-JDW (DED)
2017	Trial Transcript Excerpts, *Microchip Tech. Inc. v. Aptiv Servs. US, LLC*, No. 17-cv-1194 (D. Del. Apr. 6-13, 2022) – Testimony of Michael Dreon
2018	Redacted Version of Jury Verdict Form, *Microchip Tech. Inc. v. Aptiv Servs. US, LLC*, No. 17-cv-1194 (D. Del.), D.I. 357
2020	Corrected Joint Claim Construction Brief, *Aptiv Techs. AG. v. Microchip Tech. Inc.,* No. 1:23-cv-00307 (D. Del)
2021	Deposition Transcript of Eric Welch (Oct. 10, 2024)

2022	Trial Exhibit No. 5 – Oct. 23, 2013 Presentation Entitled "Digital iPod Out OTG Solution Dual Role USB HUB"
2023	Trial Exhibit No. 6 – Boston USB Hub with SD Card Port ASIC, Product Specification
2024	Trial Exhibit No. 7 – Functional Diagram of Boston 2 Chip
2025	Trial Exhibit No. 12 – Nov. 10, 2014 Presentation Entitled "Delphi/Unwired USB Hub Apple CarPlay Overview
2026	Trial Exhibit No. 25 – Product Business Plan for Sandia
2027	Trial Exhibit No. 124 – Jun. 9, 2017 Presentation Entitled "Delphi Data Connectivity"
2028	Trial Exhibit No. 143 – Oct. 7, 2015 Presentation Entitled "Delphi Data Connectivity"
2029	Trial Exhibit No. 192 – Jan. 2013 Presentation re: Apple Digital iPod Out Support
2030	Trial Exhibit No. 236 – USB4916 Product Specification
2031	Trial Exhibit No. 248 – Jul. 23, 2014 David Sroka, Brigham Steele, Andrew Rogers, Don Perkins Email Chain re: Debunking Unwired
2032	Trial Exhibit No. 268 – Jan. 5, 2015 David Sroka, Santosh Shetty, Mark Bohm Email Chain re: USB Multi Host Bridge Questions
2033	Trial Exhibit No. 273 – Jan. 12, 2015 Davis Sroka, Mike Pennell, Mark Bohm, Eric Kawamoto Email Chain re: Sparta and Tecvox
2034	Trial Exhibit No. 275 – Jan 26, 2016 Mitchel Obolsky, Steve Sanghi, Ganesh Moorthy Email Chain re: Initial Proposal for Tecvox (Chrysler and Fiat, too) with Attachment
2035	Trial Exhibit No. 287 – Jan. 21, 2016 Mark Bohm, Mitchel Obolsky Email Chain re: Analysis of Unwired Media Connectivity Module
2036	Declaration of Michael Dreon
2037	Dreon Decl. Ex. A – Trial Exhibit No. 18 – Jan. 27, 2016 Presentation Entitled "PACE Award Finalist Dual Role Hub"
2038	Dreon Decl. Ex. B – PACE Award Judge's Citation
2039	Dreon Decl. Ex. C – PACE Award Video Transcript
2040	Trial Transcript (Vol. 2)
2041	Trial Transcript (Vol. 3)
2042	Trial Transcript (Vol. 4)

V. UNDERSTANDING OF THE LAW

20. I am not a lawyer, and I will not provide any legal opinions. Rather, I have been asked to provide my technical opinions based on (1) how a person of ordinary skill in the art would have understood various references before the priority dates of the Challenged Patents and (2) how a person of ordinary skill in the art would understand disputed claims in the ’962 Patent. Although I am not a lawyer, I have been advised to apply certain legal standards in forming my opinions.

A. Claim Construction

21. I have been informed that claims should be construed using the same standard as in district court. As such, claim terms generally receive their plain and ordinary meaning, *i.e.*, how a person of ordinary skill in the art would have understood the term at the time of the claimed invention.

B. Obviousness

22. I understand that a patent claim is unpatentable if it is obvious in view of the prior art. I further understand that obviousness must be considered from the perspective of a person of ordinary skill in the art at the time the claimed invention was made.

23. I have been informed that a patent claim is unpatentable if it would have been obvious to a person of ordinary skill in the art. In analyzing the obviousness of a claim, I understand the following factors may be taken into

account: (1) the scope and content of the prior art; (2) the differences between the prior art and the claims; (3) the level of ordinary skill in the art; and (4) any so called "secondary considerations" of non-obviousness if they are present.

24. I have been informed that, in considering obviousness, one must not use hindsight reasoning derived from the patent-at-issue. Rather, references can only be combined if there would have been a motivation to combine them at the time of the invention and a person of ordinary skill in the art would have had a reasonable expectation of success in the combination.

C. Indefiniteness

25. I understand that a patent's claims are indefinite only if the claims, read in light of the specification delineating the patent and the prosecution history, fail to inform, with reasonable certainty, those skilled in the art about the scope of the invention.

D. Level of Skill in the Art

26. In my opinion, a person of ordinary skill in the art in the field of the Challenged Patents, as of the date of invention (September 26, 2013) ("POSITA"), would have had a bachelor's degree in computer science, electrical engineering, or an equivalent, and two years of professional experience working with computer network protocols such as USB. Lack of work experience can be remedied by additional education, and vice versa.

27. I understand that for some claims of the ’962 patent, the Petitioner contends that a priority date of September 6, 2016 should apply. In my opinion, the level of ordinary skill in the art would be the same whether a priority date of September 26, 2013 or September 6, 2016 applies.

28. I understand that the Petitioner contends that a heightened level of ordinary skill applies, including that the POSITA would have been well-versed in USB standards (including the USB 2.0 and 3.0 Specifications, the OTG Supplement, and the USB Power Delivery Specifications) and the design/deployment of USB hosts, USB devices, and USB hubs, including suitable environments for USB systems; and that the POSITA would also have had a working understanding of network/communication architectures (e.g., master/slave) and components (e.g., host-to-host bridges), computer hardware and peripherals, computer programming, and the design/implementation of communication software/firmware/drivers in standard operating systems (e.g., Windows and Linux) and embedded systems. In my opinion, the Petition’s proposed level of ordinary skill does not reflect the true ordinary level of skill applicable to the challenged patents. Specifically, it is my view that the level of ordinary skill would not include the specific documents and technologies identified above.

29. My opinions regarding the level of ordinary skill in the art are based on, among other things, my industry experience hiring and managing technical personnel in the computer networking field, and my understanding of the basic qualifications that would be relevant to an individual tasked with investigating methods and systems in the relevant area, and my familiarity with the backgrounds of colleagues, both past and present.

30. My education and my level of experience in electrical engineering exceeds that necessary for a person of ordinary skill in the art. My opinions on the Challenged Patents and the asserted prior art are from the perspective of a POSITA.

VI. THE STATE OF THE ART

A. Universal Serial Bus

31. Based on my review of the Challenged Patents, the patented technology relates generally to a novel way of allowing devices to communicate using the Universal Serial Bus (USB) protocol.

32. USB is a common data networking and computing device connectivity standard designed to allow a variety of devices to connect and communicate with one another using a standardized communication and power interface. Prior to the introduction of USB in the mid-1990s, there were a wide array of different interfaces for connecting various peripheral devices to personal

computers. USB was conceived of as a way to reduce the number of different ports and cables required by consumers.

33. The first USB specification (version 1.0) was released in January 1996. The USB 2.0 specification was released in April 2000, and the USB 3.0 specification was released in November 2008. The core principles of USB I discuss here have remained consistent across each of these specifications.

34. USB is a serial bus standard. In computing, the term "bus" is used to refer to systems for transferring data between computing components, whether inside of a computer or between a computer and external components. A "serial" bus is one in which data is sent along a single pathway, with one bit following another. This is in contrast with a "parallel" bus in which the bits comprising a single data transmission may be sent simultaneously along parallel communication lines.

35. In order to manage the data traffic on its serial bus, USB employs a strict, top-down topology. This means that the network has a single USB "host" which communicates with various USB "devices." The protocol requires that it is the host that must initiate all communication. While a USB host may request data from a USB device, USB Devices cannot initiate communication with the host and are limited to responding to a host's command. Because a host issues commands, it is not configured to receive them.

36. An example of a very simple USB system is provided below:

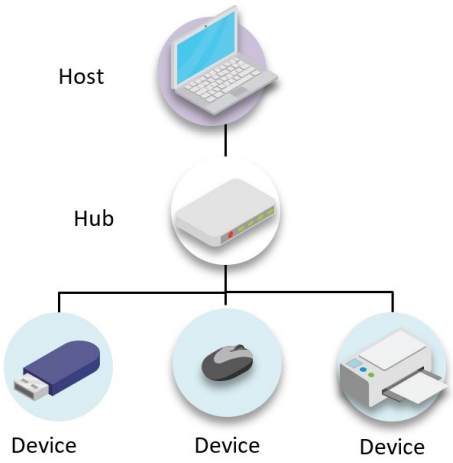

In this scenario, the computer serves as the USB host, while the thumb drive, mouse, and printer act as USB devices.

37. The direction of data flow in a USB network is described relative to the USB host. "Upstream" means the direction of data flow towards the host. "Downstream" means the direction of data flow away from the host. In our example, the PC would be described as upstream of the mouse and printer. Conversely, one could refer to the mouse and printer as downstream devices.

38. The components of a USB network connect via physical connection interfaces called ports. While these connections can be direct, it is common to employ an intermediate device called a hub. A hub is a device that routes multiple downstream ports to a single upstream port. Using a hub allows the host to have more downstream ports where devices can connect. Because multiple downstream ports are routed to a single upstream port, the hub also reduces the amount of

wiring required as compared to a USB network using only direct connections. In our example, a hub could be used to allow a PC with only two built-in USB ports to have many downstream ports. Thus, the PC could simultaneously connect to a mouse, keyboard, printer, web camera, etc.

B. Issues with Certain Implementations

39. USB is used in many applications, including the automotive sector. By the early 2010's, it was common for automotive companies to use USB for interfacing devices within a vehicle. Typically, the car's computer or "head unit" would be configured as a USB host. The head unit could then communicate with (1) non-removable parts of the vehicle, such as speakers, displays, or SD card readers (used for uploading maps) and (2) consumer devices, including memory sticks, tablets, and, of course, smart phones.

40. Smart phones changed the dynamics of USB communication. In traditional USB networks, a PC was commonly configured as a host with accessories acting as devices. But as smart phone technology advanced, smart phones became capable of acting as a USB host and supporting their own accessories. Thus, depending on the configuration, smart phones could act as either a USB device or a USB host.

41. Around 2013, Apple informed automakers of its plans to release a new technology known as CarPlay which was designed to create a seamless user

experience in compatible vehicles. (EX-2003, 49:17-53:9.) Specifically, when an iPhone connected to a vehicle's infotainment system, the iPhone applications would be displayed on the infotainment system's screen. Apple provided automakers with the technical requirements to make their vehicles compatible, described in an Accessory Interface Specification. To ensure the requirements were met, Apple implemented a certification process wherein only approved systems would be allowed to implement CarPlay. (EX-2017, 199:21-200:8.)

42. Apple's specifications were not easy to implement. A particularly difficult constraint was that Apple required the iPhone to act as the USB host during CarPlay. This proved problematic as existing vehicle infotainment systems were designed for an embedded host in the head unit to serve as the USB host and to control a variety of USB devices, such as the screen, speakers, and any external storage components (e.g., SD cards, CD players, etc). As discussed above, the USB specification only contemplates a single host in any USB network. In fact, in a standard USB network, two hosts cannot communicate since they are only configured to give commands, not receive them. Thus, existing designs could not implement CarPlay while also maintaining connectivity between the head unit and the vehicle's other USB devices such as speakers, displays, SD card readers, etc.

43. At the time of the invention, there were two imperfect approaches to implementing CarPlay (or other features requiring host-to-host communications in a USB system).

44. The first approach was to include a dedicated USB port for host-to-host communications. This solution was known as "dual lane" because the host-to-host communications and host-to-device communications were kept separate. But because the solution required dedicated host-to-host ports, it required consumers to connect their device to a different port depending on whether it was operating in host or device mode. Furthermore, the solution required additional wiring (compared to a hub-compatible network) and increased the cost and complexity of the USB system, something that most automakers were unwilling to accept.

45. The second approach was to effectively invert the USB communication network by swapping the existing host and device roles when a user connected a CarPlay-enabled iPhone. (EX-1003, 3:18-21.) For example, when CarPlay was initiated, the iPhone would become the host and the head unit would become a device. This role-swapping could be accomplished via specialized "On-the-Go" ("OTG") ports which allowed compatible devices to negotiate a role reversal. (EX-1003, 3:21-24.) Similarly, Microchip's proprietary "FlexConnect" feature dynamically changed a physical port from an upstream port

to a downstream port, allowing the connected devices to change roles. (*Id*., 3:46-49.)

46. While role-reversal systems allowed the smart phone to act as a host, they contained a fundamental flaw. By inverting the topology of the USB network, the head-unit was forced to act as a device, not a host. (EX-1003, 3:56-60.) As such, it could no longer support connections with the other downstream devices in the vehicle while CarPlay was in use. As a practical matter, this meant activating CarPlay might disrupt built-in functionality like navigation and audio playback. (EX-1003, 3:60-3:64.) Thus, OTG and FlexConnect could not facilitate both host-to-host communication (e.g., CarPlay) and persistent downstream USB throughout the vehicle. (EX-1003, 3:56-60.)

VII. THE CLAIMED INVENTIONS

47. In response to Apple's requirement that the iPhone act as a USB host during the use of CarPlay, Aptiv created an innovative solution that would allow both the iPhone and the head unit to act as a USB host. At its most basic, this involved the use of a "bridge" structure that would allow two separate hosts to send data back and forth. The car's head unit would then receive firmware that would allow its embedded host to respond to requests from and send data to the iPhone host.

48. The Challenged Patents claim systems, devices, and methods for providing host-to-host and host-to-device communications through a hub. (*E.g.*, EX-1003, Abstract.) To accomplish this, the inventors modified a traditional USB hub module to work with a USB bridge, allowing host-to-host and host-to-device communications without interrupting normal hub functionality. In operation, when a consumer device operating in host mode is connected to a downstream port, the USB signal is routed to the vehicle's embedded USB host through the USB bridge, rendering the two hosts compatible. (*E.g.*, EX-1003, Claim 1, 4:27-4:33.) But when a consumer device operating in device mode is connected, the USB signal is instead routed directly to the vehicle's embedded host, thereby bypassing the bridge. (*E.g.*, EX-1003, 4:25-27.) Thus, the ports are "dual-role" such that the device can be connected regardless of its USB mode, or even handle the same device changing modes. (*E.g.*, EX-1003, 4:20-4:22.) The alternative paths for data transmission are shown below in an annotated version of Figure 4.

Figure 4

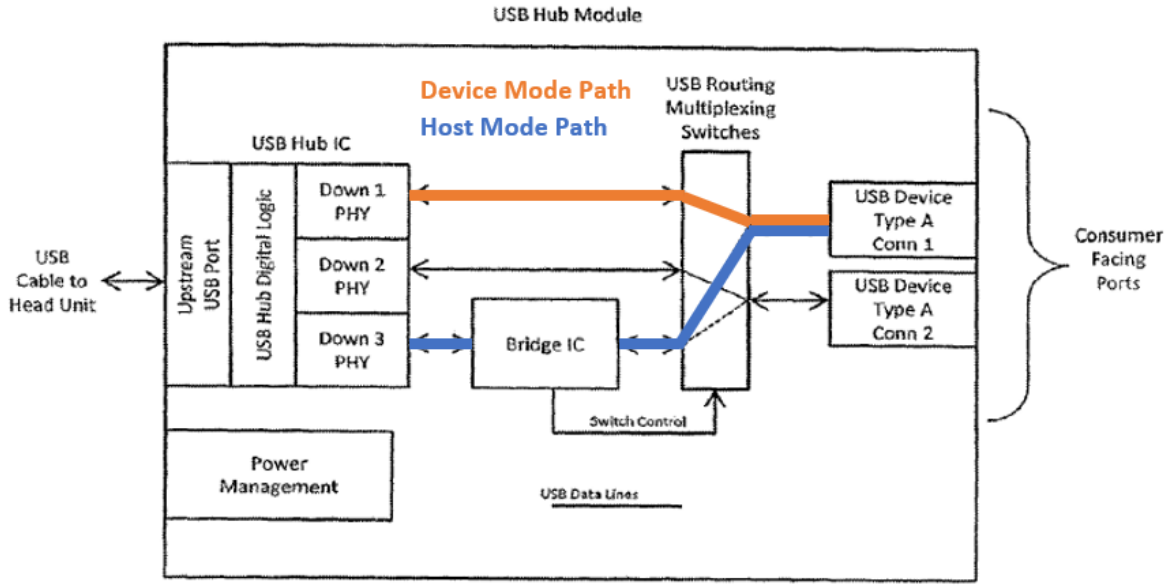

(*E.g.*, EX-1003, Figure 4 (annotated).)

49. Unlike dual lane, the invention can be implemented with a single upstream line and allows consumer devices operating in either mode to connect to the vehicle using any port. Moreover, this design does not force the infotainment system to act as a device; instead, it continues to act as a host throughout its operation, allowing for persistent communication with downstream devices. (*E.g.*, EX-1003, 8:59-9:4.) Notably, the invention also does *not* require OTG ports or adapters; it instead takes an entirely different approach to solving the problem. (*See e.g.*, EX-1003, 1:21-24.)

50. Below, I provide more detail on the Challenged Patents:

- **’420 Patent -** The ’420 Patent is generally directed to devices, systems, and methods for facilitating host-to-host and host-to-device communications through a USB hub. (EX-1003, Abstract.) The ’420 Patent contains claims directed to a USB hub module (claims 1-6), an integrated circuit (claims 7-12), a method of operating a USB hub module (claims 13-14) (not challenged in this petition), a USB connectivity module (claims 15-17), and a communication system (claims 18-20) (not challenged in this petition).
- **’643 Patent -** The ’643 Patent is generally directed to methods for facilitating host-to-host and host-to-device communications through a USB hub. (EX-1011, Abstract.) Claims 1-15 are directed to methods.
- **’962 Patent -** The ’962 Patent is generally directed to devices for facilitating host-to-host and host-to-device communications through a USB hub. (Ex. 1005, Abstract.) The ’962 Patent contains claims directed to a USB hub module (claims 1-13) and an integrated circuit (claims 14-19). Dependent claims further describe implementing this functionality while also providing power to the connected device. (EX-1005.)
- **’072 Patent -** The ’072 Patent is generally directed to a method for facilitating host-to-host and host-to-device communications through a USB hub. (EX-1009, Abstract.) Its single claim recites a method wherein an embedded USB host is connected to the USB hub.

VIII. THE ASSERTED PRIOR ART

51. I understand that Petitioner contends that the Challenged Patents are obvious over various combinations of the following prior art. In addition to the summaries provided by Petitioner's expert, the following teachings (or lack thereof) are notable.

A. Chang

52. Chang is an abandoned U.S. patent application that discloses a USB hub for implementing host-to-host USB transmission through a dedicated host port connected to a bridge. (EX1014, Abstract, [0020].) Chang's hub addresses the express goal of "easily establishing a connection between a computer and another computer." (EX1014, [0003].) In Chang's hub, a USB host device (such as a computer) can connect to a dedicated host port (50), and communicate via a bridge (52) and hub control unit (46) to another USB host device—such as a second computer—connected to an uplink port (42). (EX1014, [0020].) FIG. 3 illustrates:

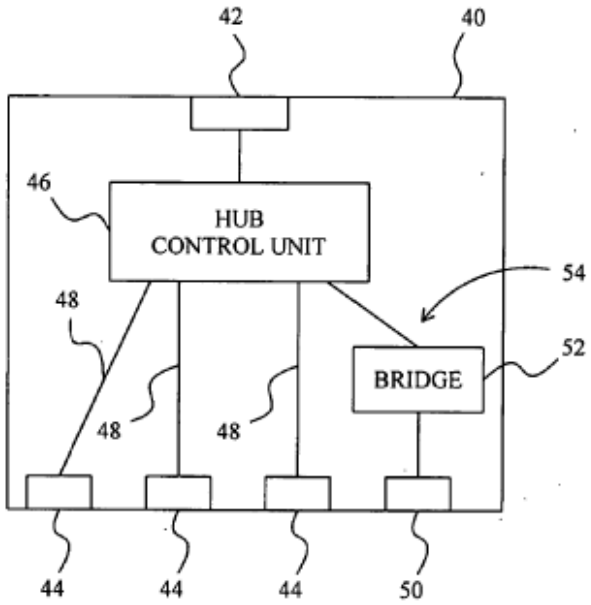

FIG. 3

(EX1014, FIG. 3.)

53. The Chang hub also comprises a number of downlink ports (44) for linking devices connected to the downlink ports to the uplink port. (EX1014, [0019].) The downlink ports allow for host-to-device transmission between USB devices (in a device mode) connected to the downlink ports and a host device connected to the uplink port. (EX1014, [0019].)

B. Chang II

54. Chang II[1] s an abandoned U.S. patent application that discloses a data transmission bridge device. (EX1015, Abstract.) The Chang II bridge device (1) has a first connection interface (11) and a second connection interface (12) connected by a control chip (13) in communication with a memory unit (14). (EX1015, [0023].) The bridge device permits data transmission between a first USB host device (2) connected to the first connection interface, and a second USB device connected to the second connection interface; the second USB device may be a device in a host mode (3) or a slave mode (4) (elsewhere referred to as a device mode). (EX1015, [0021]-[0022].) FIG. 1 illustrates:

[1] Chang and Chang II have different inventors, Ming-Te Chang and Chi-Tung Chang, respectively. (EX-1014; EX-1015.)

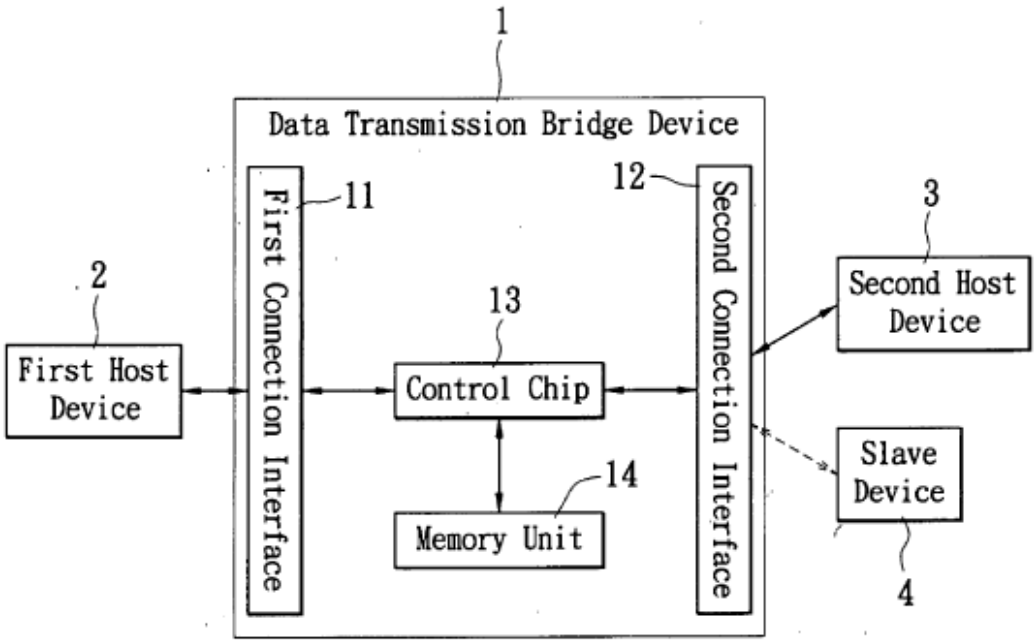

FIG. 1

(EX1015, FIG. 1.

55. Chang II's "main feature" is providing two different transmission paths, automatically detecting whether a host or "slave" USB device is connected to the second connection interface, and selecting one of two different transmission paths between the first and second connection interfaces accordingly. (EX1015, [0021].) Chang II's control chip implements this feature via a process shown in FIG. 6:

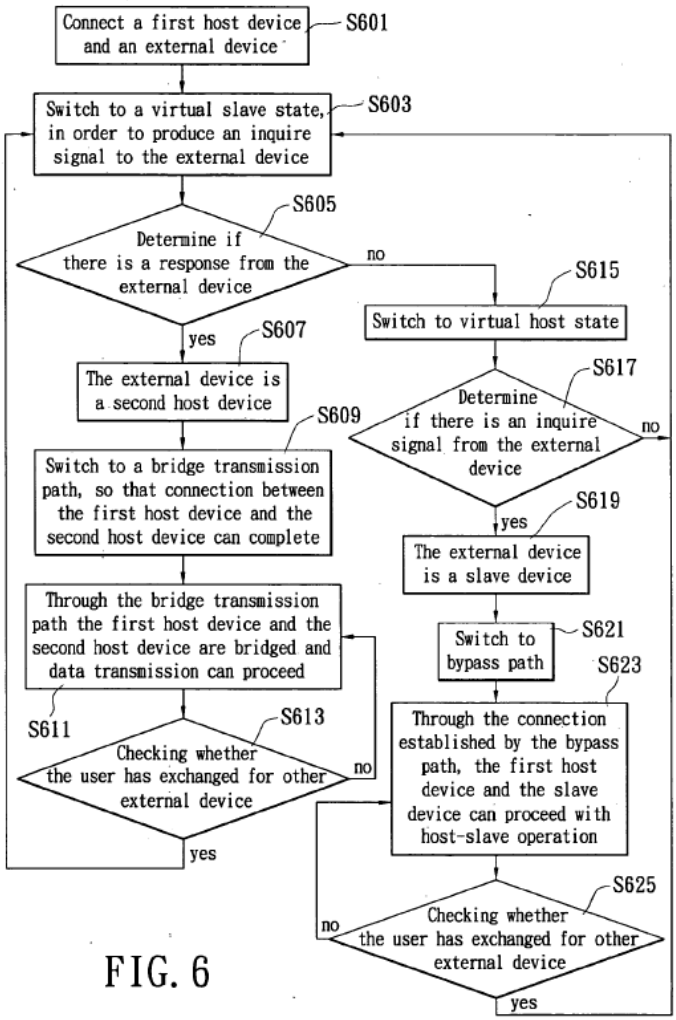

FIG. 6

(EX1015, [0023], [0042], FIG. 6.)

C. Chutorash

56. Chutorash is directed to a system for connecting a vehicle control system to a device, such as a mobile phone, via USB. Chutorash identifies two problems with vehicle user interface systems. First, it notes that the human-machine interfaces of vehicles and portable devices are "typically separate, look very different, and are difficult to use together." (EX-1029,1:31-1:32.) Because

"[a]pplications provided on portable devices are typically not configured to interact with a vehicle," Chutorash explains that there is a need for "improved user interface features and/or connectivity features." (EX-1029, 1:32-1:33, 1:34-35.) Second, Chutorash states that "[t]here is a need for effective display reproduction and/or user interface reproduction from a remote source to an in-vehicle display or other in-vehicle interface." (EX-1029, 1:36-1:39.) The portions of Chutorash quoted in Petitioner's summary stand for the unremarkable proposition that USB was a known method for connecting a mobile phone to a vehicle's infotainment system. (IPR2024-00230, Petition, 39-41; PGR2024-00011, Pet. 39-41.)

D. AN96527

57. AN96527 is an application note by Cypress Semiconductor titled "Designing USB Type-C Products Using Cypress's CCG1 Controllers." (EX1064, 1.) As the title indicates, the note describes using Cypress's CCG1 product to implement USB Type-C systems. (EX1064, 1-2.) Neither Chang nor Chang II are related to USB Type-C or to the CCG1 product; as the note indicates, USB Type-C was not introduced until August 2014, years after Chang and Chang II. (EX1064, 1.) Moreover, unlike Chang, Chang II, and the '962 patent, the AN96527 document is unrelated to multi-host USB systems; instead, it discusses "USB link pairs" formed when "a USB Host and USB device are interconnected." (EX1064,

3.) The applicability of AN96527 to the ’962 patent and the Petition’s other references is thus limited.

IX. GROUND I: CLAIMS 1-10 AND 14-17 ARE NOT RENDERED OBVIOUS BY CHANG IN VIEW OF CHANG II AND POSITA KNOWLEDGE

58. The Petition proposes in Ground I that claims 1-10 and 14-17 are met by combining the electronic circuit of Chang with the electronic circuit of Chang II; and by further modifying that combination by inserting circuit elements not found in or suggested by either reference, but which Petitioner claims were within the knowledge of the POSITA. (*See, e.g.*, Petition, 34-47.)

59. The challenged claims are not rendered obvious by the Petition’s proposed combination at least because, as explained below, the proposed combination fails to meet all limitations of the challenged claims. The proposed combination is additionally improper for relying on conclusory statements and unspecific expert testimony to supply missing claim elements, defying Federal Circuit precedent. Furthermore, as explained below, the hindsight-driven combination is technically unsound and would render the references more costly and inoperable for their intended purposes, thus failing to motivate the POSITA to make the proposed combination with any reasonable expectation of success.

A. The Petition's Proposed Combination

60. The Petition proposes three separate implementations of combining Chang, Chang II, and the POSITA's knowledge. (Petition, 34-47.) Each proposed implementation offers a modification of Chang by Chang II, plus a switching element—either a multiplexer (mux) or a crossbar—inserted downstream of the purported bridge. (Petition, 34-47.)

61. Asked to explain why multiple implementations are proposed, Mr. Welch testified: "It was about if a specific claim had language which could be interpreted in order to have one of these rather than the other." (EX2021, 220:11-221:11.) This admitted claims-first approach to combining the prior art is precisely the type of hindsight reconstruction that is prohibited. Even so, the proposed combination is fundamentally defective and fails to meet the claim limitations as described herein.

1. The Mux Implementation

62. The Petition discloses a proposed implementation (the "mux implementation"), that inserts a multiplexer within Chang's USB hub 40. (Petition, 39-40.) Notably, the Petition does not identify the mux implementation as a basis for challenging any claim. (*See* Petition, 34-80; EX2021, 216:5-217:24 (Petitioner's expert explaining that he chose not to rely on the mux implementation

for his claim analysis of a related patent).) I understand the mux implementation is thus outside the scope of Grounds I and II. *See* 35 U.S.C. § 312(a)(3).

63. In the Petition's mux implementation, Chang is modified by replacing its ports with dual-role ports; and inserting a 2:1 multiplexer between Chang's port 50 and bridge 52. (Petition, 34-43.) Chang's transmission paths 48 are rewired such that host port 50 is connected to the input of the multiplexer; and the multiplexer can connect host port 50 to either Chang's bridge 52 (Chang II's bridge device 1) or Chang's hub control unit 48, depending on its select lines:

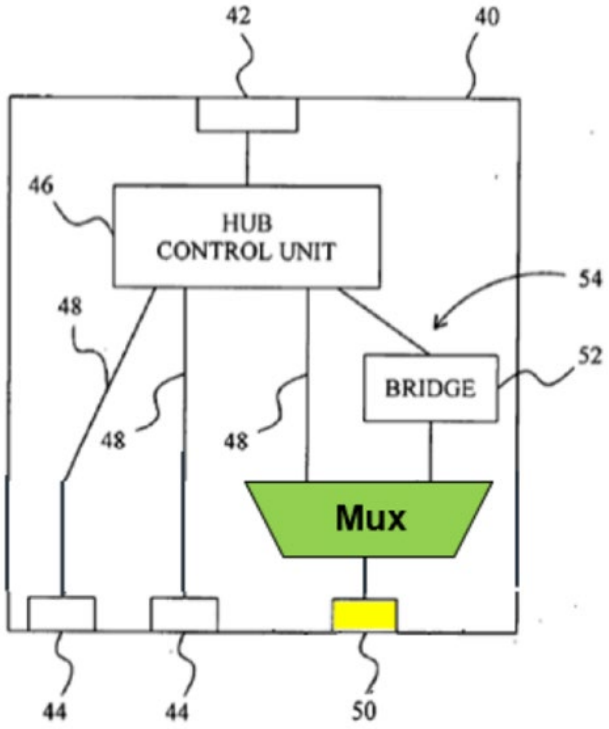

(Petition, 10-11, 39-40.)

64. The Petition then modifies the combination further to incorporate Chang II's bridge device 1; the Petition supposes that Chang II's detection unit

and/or bridge would generate signals that control the multiplexer's switching, surmising that doing so "would have been routine and obvious." (Petition, 38, 39 n.14.)

2. The Internal Crossbar Implementation

65. In two other proposed implementations (the "crossbar implementations"), Chang and Chang II are modified by inserting a crossbar switch. (Petition, 43-47.) In the "internal crossbar implementation," or the "Hub 46 implementation," the crossbar is inserted within Chang's USB hub 40. (Petition, 46.) Various additional modifications are made to the combination of Chang and Chang II. Chang's host port 50 and downlink ports 44 are transformed into dual-role USB ports and connected to inputs of the crossbar; Chang's bridge 52 is decoupled from USB port 50 and instead connected to a first output of the crossbar; and Chang's transmission paths 48 are decoupled from their respective downlink ports 44 and instead connected to additional outputs of the crossbar:

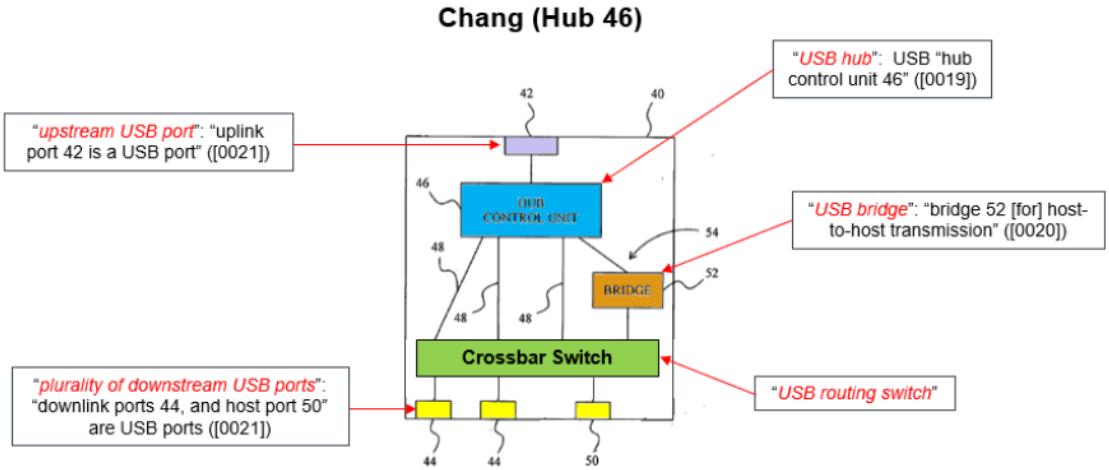

(Petition, 39-40, 46.)

66. According to the Petition, the crossbar can switch a downstream USB port (44, 50) to the hub control unit 46 directly, bypassing bridge 52 (if a connected device is in device mode):

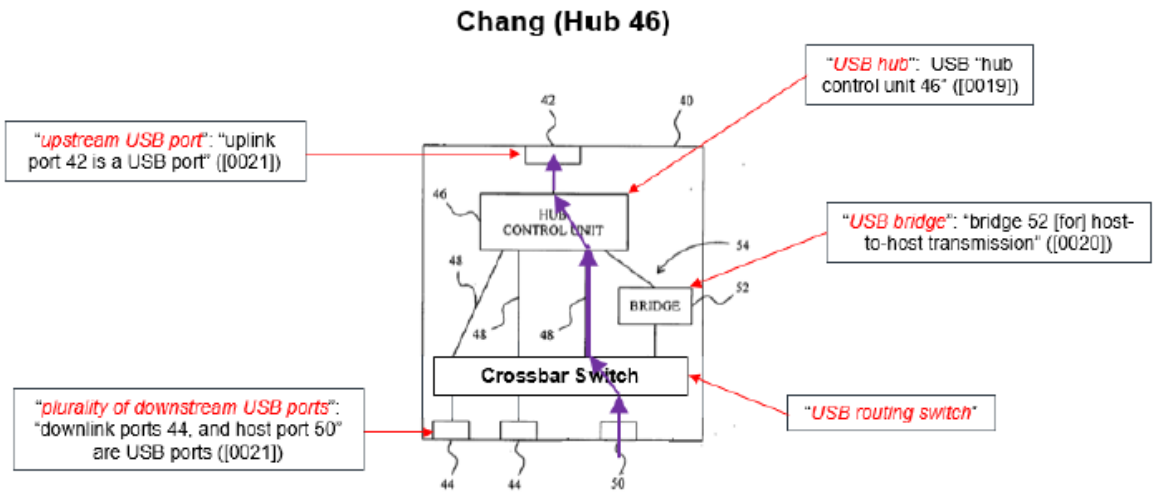

(Petition, 66.)

67. Alternatively, the crossbar can switch the downstream USB port to the hub control unit 46 through bridge 52 (if the connected device is in host mode):

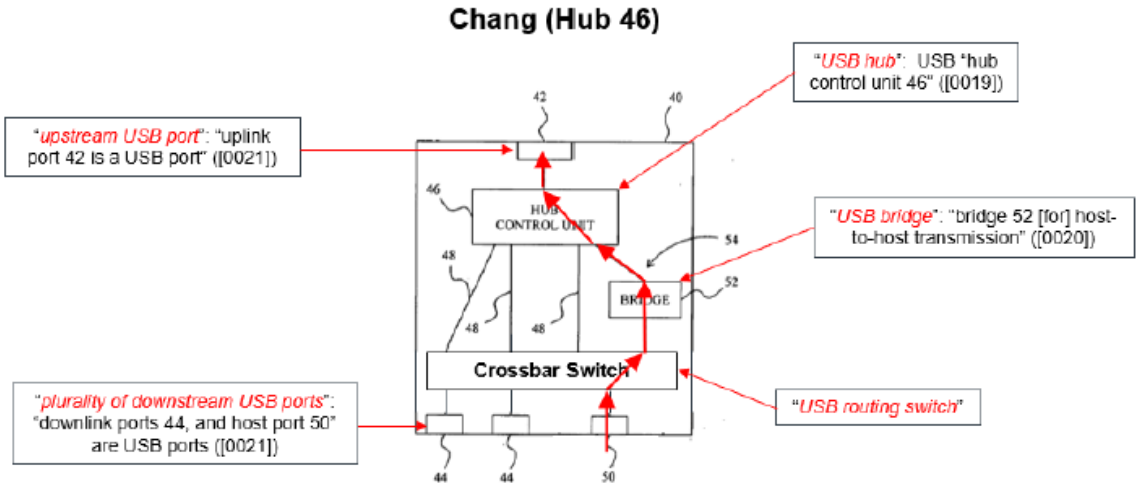

(Petition, 61.)

68. As with the mux implementation, the Petition does not rely on Chang II's internal switching between the bridge path or the bypass path; instead, as discussed below, the crossbar apparently performs the switching based on the same bridging detection signal generated by Chang II's control chip 13. (Petition, 39 n.14, 61 n.18.) The Petition speculates that this proposed modification "would have been routine and obvious." (Petition, 39 n.14.)

3. The External Crossbar Implementation

69. In the "external crossbar implementation," or the "Hub 40 implementation," the crossbar is inserted external to Chang's USB hub 40. (Petition, 47.) Chang and Chang II are further modified by relocating Chang's bridge 52 outside the USB hub 40; adding new dual-role USB ports (44, 50)

outside the USB hub 40; inserting a crossbar between the dual-role USB ports and the bridge 52; and connecting the outputs of the crossbar to the hub control unit 46:

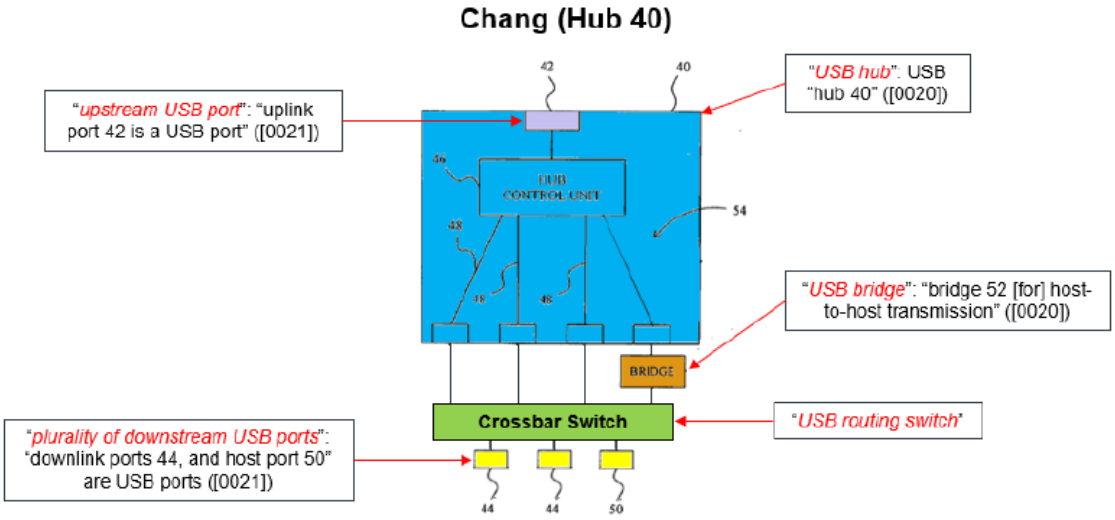

(Petition, 39-40, 47.)

70. According to the Petition, as above, the crossbar can switch a downstream USB port (44, 50) to the hub control unit 46 directly, bypassing bridge 52 (if a connected device is in device mode):

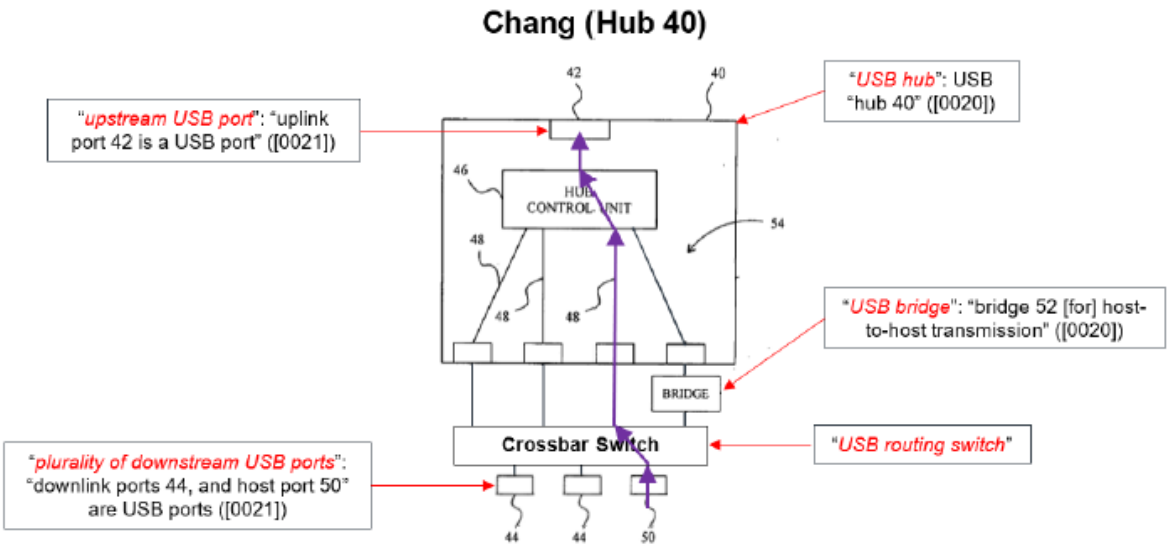

(Petition, 67.)

71. And as above, the crossbar can switch the downstream USB port to the hub control unit 46 through bridge 52 (if the connected device is in host mode):

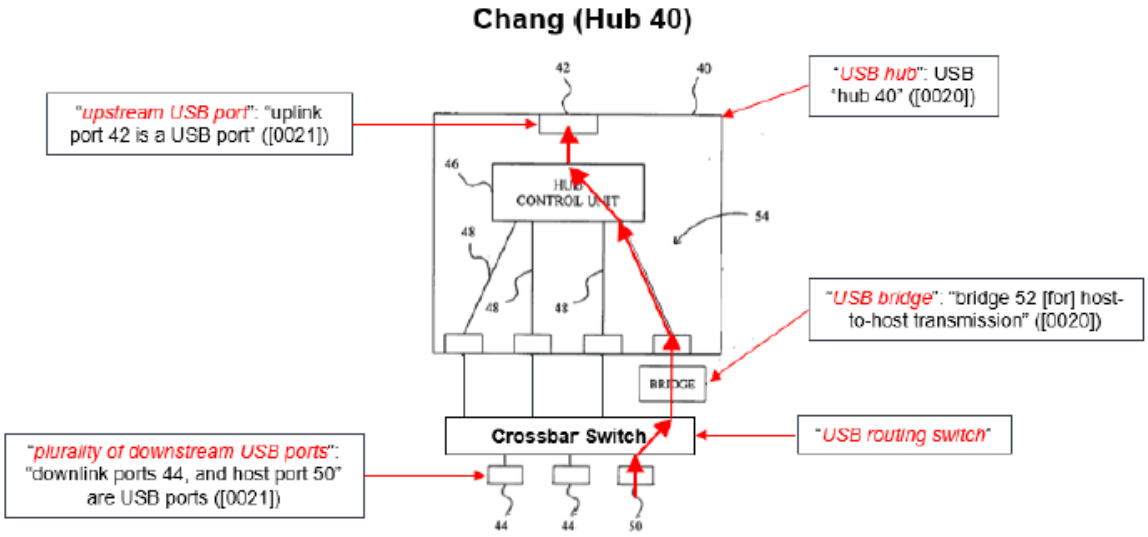

(Petition, 62.)

72. As above, the Petition does not rely on Chang II's internal switching between the bridge path or the bypass path; instead, the crossbar apparently

performs the switching based on the same bridging detection signal generated by Chang II's control chip 13. (Petition, 39 n.14, 61 n.18.) The Petition speculates that this proposed modification "would have been routine and obvious." (Petition, 39 n.14.)

B. The Proposed Combination Is Incomplete and Technically Unsound

73. Petitioner's proposed combination—including all three implementations—is incompletely described in the Petition; and is technically unsound and would not be operable in the manner set forth in the Petition. The proposed combination further is unsupported by the references, and relies solely on expert testimony that is contradictory and unreliable.

1. The Petition Fails to Show the USB Routing Switch With Particularity For Any Challenged Claim

74. All challenged claims recite a USB routing switch having a particular configuration. As described above, the proposed combination relies on "off-the-shelf" switching elements—multiplexers or crossbar switches—to implement the claimed USB routing switch. (*See* Petition, 58.) These switching elements are absent from Chang and Chang II, and are instead supplied from the POSITA's alleged knowledge. (*See* Petition, 36-47, 39 n.14, 61 n.18.)

75. The claimed USB routing switch cannot be met by off-the-shelf switching components alone. The claims instead require the USB routing switch to

be configured in a particular manner. *First*, the claimed USB routing switch must be configured to connect a first downstream USB port to the upstream USB port through the USB bridge when a consumer device connected to the first downstream USB port is the USB host and is configured to initiate bidirectional communication with the upstream USB port. (EX1005, claim 1.) *Second*, the claimed USB routing switch must be configured to connect the first downstream USB port directly to the USB hub when the consumer device connected to the first downstream USB port is configured to only respond to communication from the upstream USB port, thereby rendering the consumer device compatible with a device connected to the upstream USB port. (EX1005, claim 1.)

76. The Petition fails to show how generic switching elements—muxes or crossbars—would be combined with Chang and Chang II to meet these specialized configuration requirements. As the Petition recognizes, switching components such as multiplexers and crossbars rely on "control signals" or "select lines" to configure which input(s) are routed to which output(s) within the switching element. EX1013, ¶¶89, 91, 223, 241, 288 (citing EX1055, 284-299, EX1015, [0038]).) For example, as Mr. Welch provides, the switching paths of a crossbar are controlled by its control signals, as defined by a truth table:

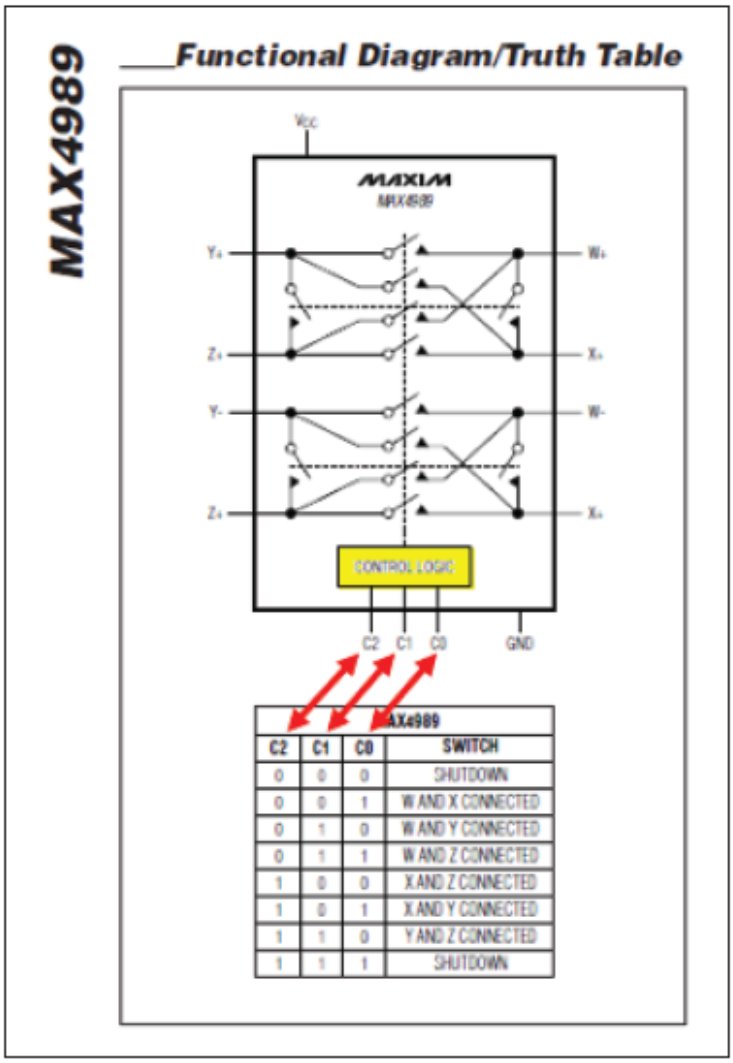

C2	C1	C0	SWITCH
0	0	0	SHUTDOWN
0	0	1	W AND X CONNECTED
0	1	0	W AND Y CONNECTED
0	1	1	W AND Z CONNECTED
1	0	0	X AND Z CONNECTED
1	0	1	X AND Y CONNECTED
1	1	0	Y AND Z CONNECTED
1	1	1	SHUTDOWN

(EX1013, ¶¶148, 163, 287 (citing EX1063, 8), 223.)

77. But the Petition is incomplete, inconsistent, and erroneous about how those control signals would be supplied or implemented in the proposed combination. Instead of explaining with particularity how the control signals of the multiplexer or crossbar would implement the claimed switching configurations, the Petition relegates the required control signals to footnotes, speculating that "It

would have been routine and obvious for the detection unit and/or bridge [of Chang II] to control the switching functionality." (Petition, 39 n.14, 60-61 n.18.)

78. The Petition's evidentiary support is limited and nonspecific. The Petition identifies that "Chang II's bridge controls routing"; observes generically that the Chang II bridge includes a control chip and detection unit, and that Chang II discloses a "bridging detection signal" internal to the control chip; and cites to Mr. Welch's description of garden-variety multiplexers and crossbars. (Petition, 39 n.14, 60-61 (citing EX1013, ¶¶242-43, 88-96) .) From this, the Petition concludes that in its proposed Crossbar Implementations, "the crossbar connects the downstream port to the bridge upon detecting a downstream host." (Petition, 60-61 note 18.) But the Petition fails to set forth how the bridging detection signal of Chang II would be utilized by the crossbar in the Crossbar Implementations to connect the USB ports in the specific configurations recited by claim 1; or how any such modification to Chang and Chang II would be within the scope of the POSITA's general knowledge. To the contrary, while the POSITA's knowledge may include multiplexer and crossbar components, it does not include the specific knowledge of how to use such generic switching components to modify Chang and Chang II to meet the specific routing switch configuration of the claims.

79. The Petition's generic and evidence-starved description of switching cannot meet the Petitioner's duty to identify, "in writing and with particularity …

the grounds on which the challenge to each claim is based, and the evidence that supports the grounds for the challenge". (35 U.S.C. § 312(a)(3).) The Petition is deficient with respect to all challenged claims for at least this reason.

2. The Proposed Combination Is Technically Unsound Because the USB Routing Switch Would Disconnect Its Control Signals

80. The Petition's proposed combination simply would not operate as described, and the Petition is further deficient with respect to all challenged claims for at least this additional reason.

81. In the proposed combination, as described above in Section IX.A, a multiplexer or a crossbar (whether in the internal or external implementation) is used to switch between (1) connecting a downstream USB port directly to the hub control module 46, if a device on the downstream port is in device mode; and connecting the USB port to the hub control module 46 via Chang's bridge 52, if the device on the downstream port is in host mode. The Petition proposes modifying Chang with Chang II's bridge device 1, which includes a control chip 13 for detecting (via detection unit 134) the mode of a connected downstream device, and switching between two transmission paths accordingly. (*See* Petition, 29 (citing EX1015, [0024], [0046]).)

82. Even though Chang II provides its own mechanism for switching transmission paths based on the mode of a connected device, the proposed

combination does not rely on Chang II's switching elements to meet the claimed USB routing switch. (*See* EX2021, 147:10-24, 148:11-25.) Instead, the Petition relies on the *crossbar* as the USB routing switch, with Chang II "detecting a mode change (*e.g.*, during an active session) and "making the corresponding connection to either the bridge or direct-to-hub path *through a crossbar*." (Petition, 39-40, 46, 72-73 (emphasis added); EX1013, ¶¶185, 190.) This switching process is described in Section IX.A.

83. Notwithstanding the Petition's deficient description of the crossbar control signals, discussed above, the proposed combination relies on installing Chang II's detection unit 134 in Chang's bridge 52 to provide the control signals that cause the crossbar to route the downstream ports through the appropriate transmission path. (*See* EX1013, ¶¶222-223 (explaining that Chang II's detection unit is part of control chip 13 and "built into the same component where the bridge is located"), 243.) For example, the Petition indicates that Chang II's "bridging detection signal," which is provided by detection unit 134, is applied to the crossbar to direct it to connect the downstream port to the bridge upon detecting a downstream host. (Petition, 60-61 n.18.) Similarly, the Petition states (with respect to claim 7, which depends from claim 1): "The detection unit and CPU control switching; namely, the detection unit 'determine[s] the type of device currently connected' (host/device) and sends the CPU a 'detection signal' used to

switch (connect) the appropriate path … Applying this teaching to Chang, *Chang's bridge* would be configured to control the crossbar's control inputs." (Petition, 75 (citing EX1013, ¶¶275-276; EX1063, 7; EX1060, 1; EX1055, 284-288).) Similarly, Mr. Welch explains that "the bridge could send a signal to the switch directing it to connect what was plugged in directly to one of the Hub ports," thus providing the Petition's Crossbar Implementations. (EX1013, ¶243.)

84. In order to generate the detection signal, the detection unit 134 executes the process shown in FIG. 6 of Chang II, described above. (Petition, 29; EX1015, FIG. 6, [0024]; EX1013, ¶¶159, 265 (citing EX1015).) Generating the detection signal requires that the detection unit 134 (and thus the bridge) communicate with the downstream port. For example, as described by Mr. Welch, the detection unit determines the connection of either a host or device on the port by "sending an 'inquire signal' and receiving a response" when a host connects (as shown in S603 and S605 of FIG. 6), or "receiving an 'inquire signal'" when a device connects (S617); and producing a detection signal (*e.g.*, a bridging detection signal or slave detection signal) accordingly. (EX1013, ¶¶80, 159, 249, 261.) Mr. Welch further explains that these detection signals "control the crossbar control signals and establish the appropriate routing connections" (*i.e.*, for a downstream port to use the bridge or to bypass the bridge). (EX1013, ¶¶159, 190, 193, 261, 265.)

85. But the proposed combination includes a structural flaw. As Mr. Welch cautions: "the detection unit *must connect* to the downstream port to detect the mode, as shown in Chang II." (EX1013, ¶193.) But in the proposed combination, the detection unit (in Chang's bridge 52) is *separated* from the downstream ports (*i.e.*, 44, 50) by the routing switch—*i.e.*, a crossbar[2]. The Petition illustrates this separation:

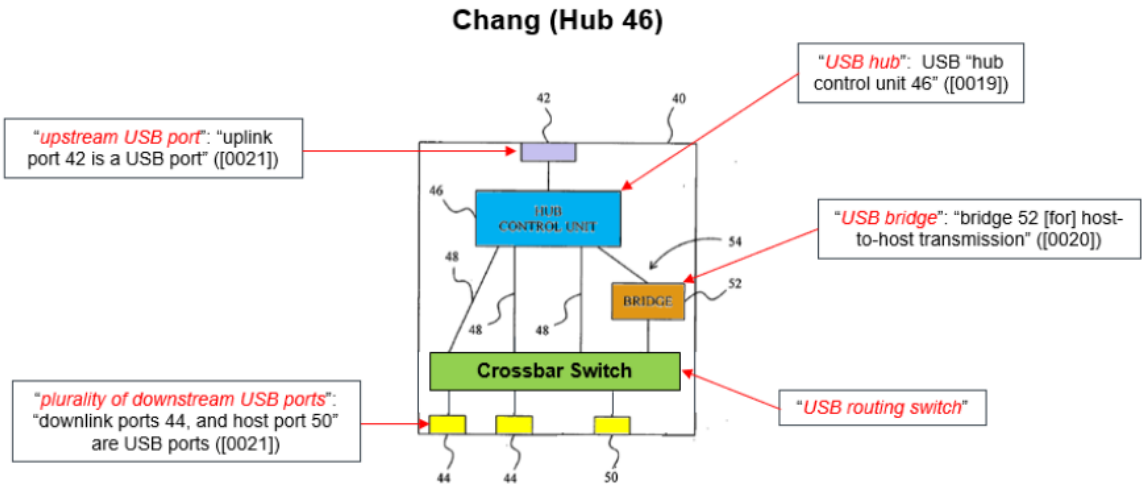

(Petition, 39-40, 46.)

[2] Because the Petition does not contend that its mux implementation meets any challenged claim, as noted above, the mux implementation is not specifically discussed here. However, the structural flaw described herein would apply equally well to the mux implementation.

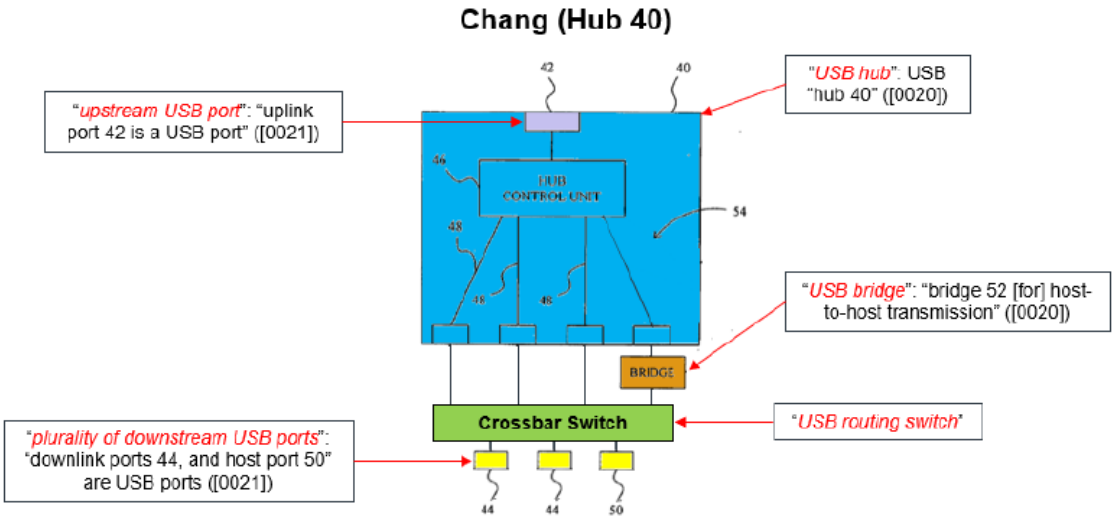

(Petition, 39-40, 47.)

86. The behavior of the routing switch demonstrates the need for Mr. Welch's admonition. When the crossbar connects the downstream port 50 to the hub via the bridge 52, the bridge 52 is connected to the downstream port 50 through the switching element:

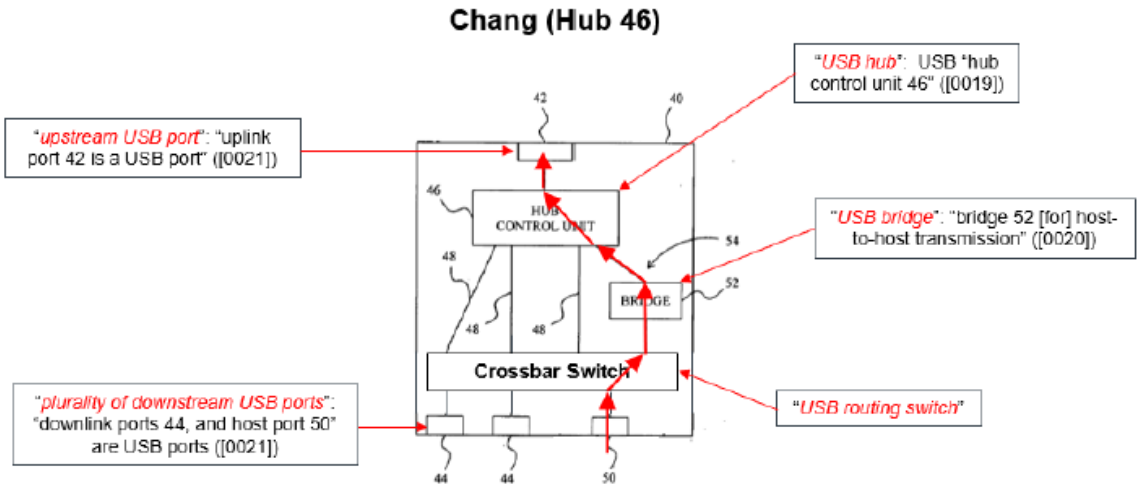

(Petition, 61.)

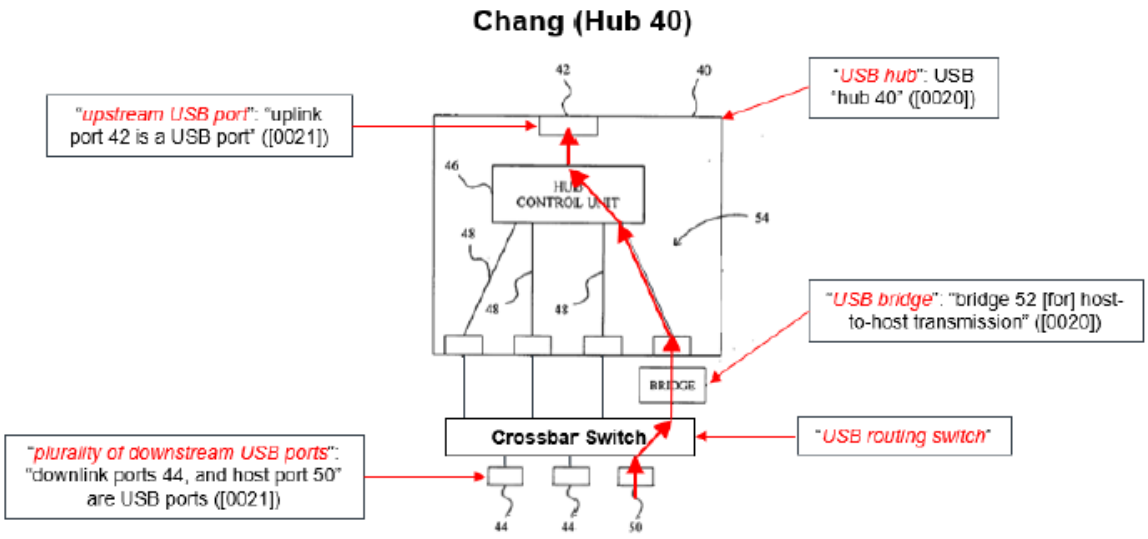

(Petition, 62.)

87. But when the crossbar connects the downstream port 50 via the direct-to-hub path—*i.e.*, when the device on the port is in device mode—it "bypasses the bridge" entirely:

Chang (Hub 46)

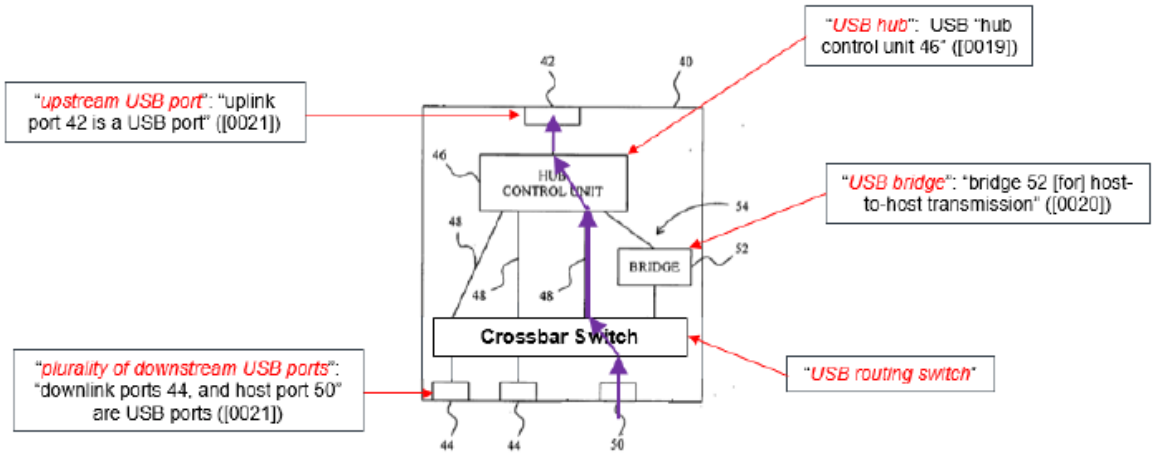

Chang (Hub 40)

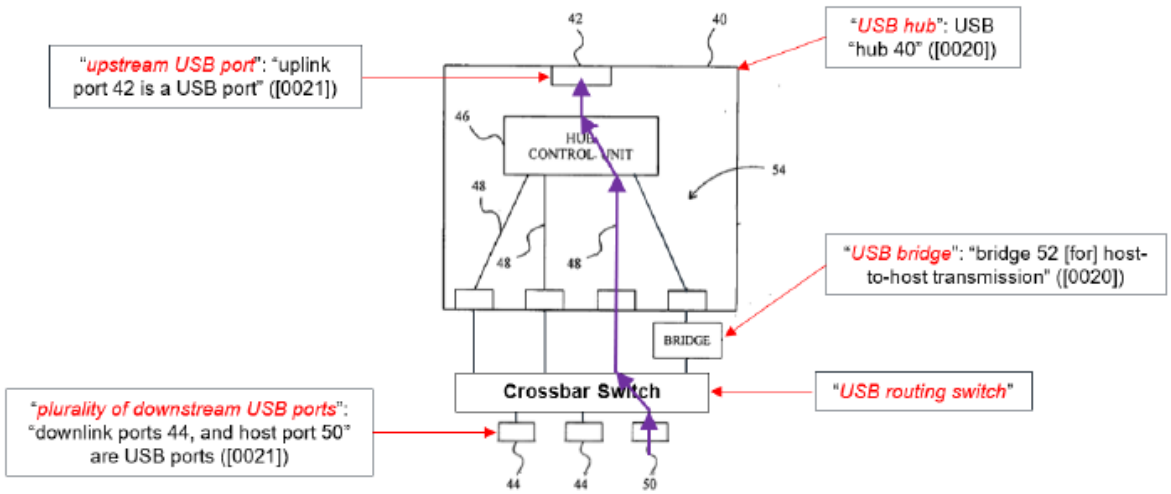

(Petition, 66, 67; *see* EX1013, ¶¶159 ("These signals cause the switching to the appropriate transmission 'path' (to use the bridge or bypass the bridge)"), 179, 190, 252, 254.)

88. Consistent with Mr. Welch's description of crossbars and supporting evidence, the crossbar selecting the direct-to-hub path electrically disconnects the bridge device from all downstream USB ports. *see, e.g.*, EX1013, ¶93.) For

example, Mr. Welch explains that in a switch, a disconnected path "will be left floating (*e.g.*, tri-stated)." (EX1013, ¶188.) Similarly, a reference cited by Mr. Welch explains that transmission gates, such as those that connect a crossbar's inputs to its outputs, comprise transistors that switch between a closed circuit and an open circuit of "essentially infinite resistance." (EX1069, 23.) And the MAX4989 switch, on which Mr. Welch relies to illustrate a crossbar, indicates that the control logic operates to electrically connect and disconnect (via open circuits) its inputs and outputs:

MAX4989

Functional Diagram/Truth Table

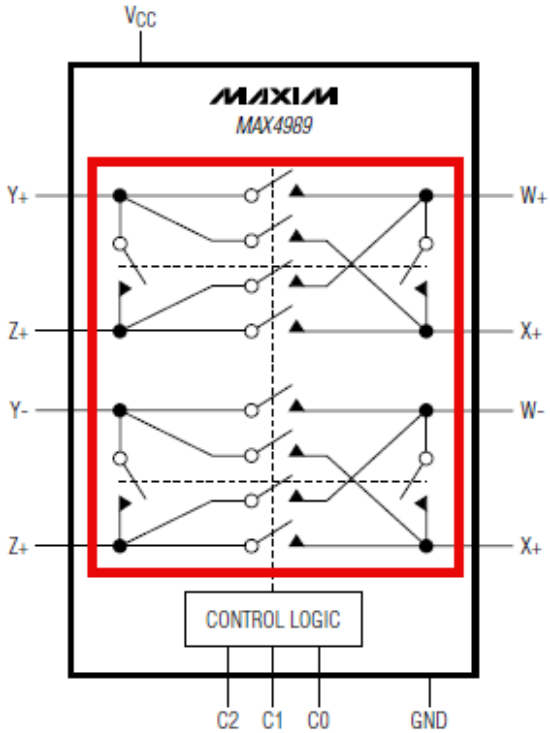

MAX4989			
C2	C1	C0	SWITCH
0	0	0	SHUTDOWN
0	0	1	W AND X CONNECTED
0	1	0	W AND Y CONNECTED
0	1	1	W AND Z CONNECTED
1	0	0	X AND Z CONNECTED
1	0	1	X AND Y CONNECTED
1	1	0	Y AND Z CONNECTED
1	1	1	SHUTDOWN

(EX1063, 8; *see also* EX1013, ¶58.)

89. When the bridge device is bypassed by the crossbar, it is thus electrically disconnected from the downstream USB ports coupled to the crossbar.

Because the bridge device cannot send or receive signals (*e.g.*, "inquire signals") from a downstream USB port in this state, the bridge device is rendered incapable of detecting whether a device is in host or device mode, such as described above for FIG. 6 of Chang II; and, accordingly, prevents the bridge device generating the bridging detection signal, or otherwise providing control signals to the crossbar. (*See* Petition, 29, 60-61 n.18; EX1013, ¶¶80, 159, 243.) Consequently, once the USB hub module in the proposed combination switches to the device mode, it is *incapable* of directing the crossbar to perform any further switching operations—including connecting or reconnecting any downstream ports to the bridge 52 or to the hub control unit 46 (*e.g.*, in response to a connected device switching to a host or device mode). (*See* Petition, 29; EX1013, ¶¶80, 159, 243.)

90. FIG. 6 of Chang II further demonstrates the flaw in the proposed combination. As described above, FIG. 6 illustrates a process performed by Chang II's bridge device (*i.e.*, control chip 13 of the bridge device) to detect whether a connected external device is in host mode or device ("slave") mode :

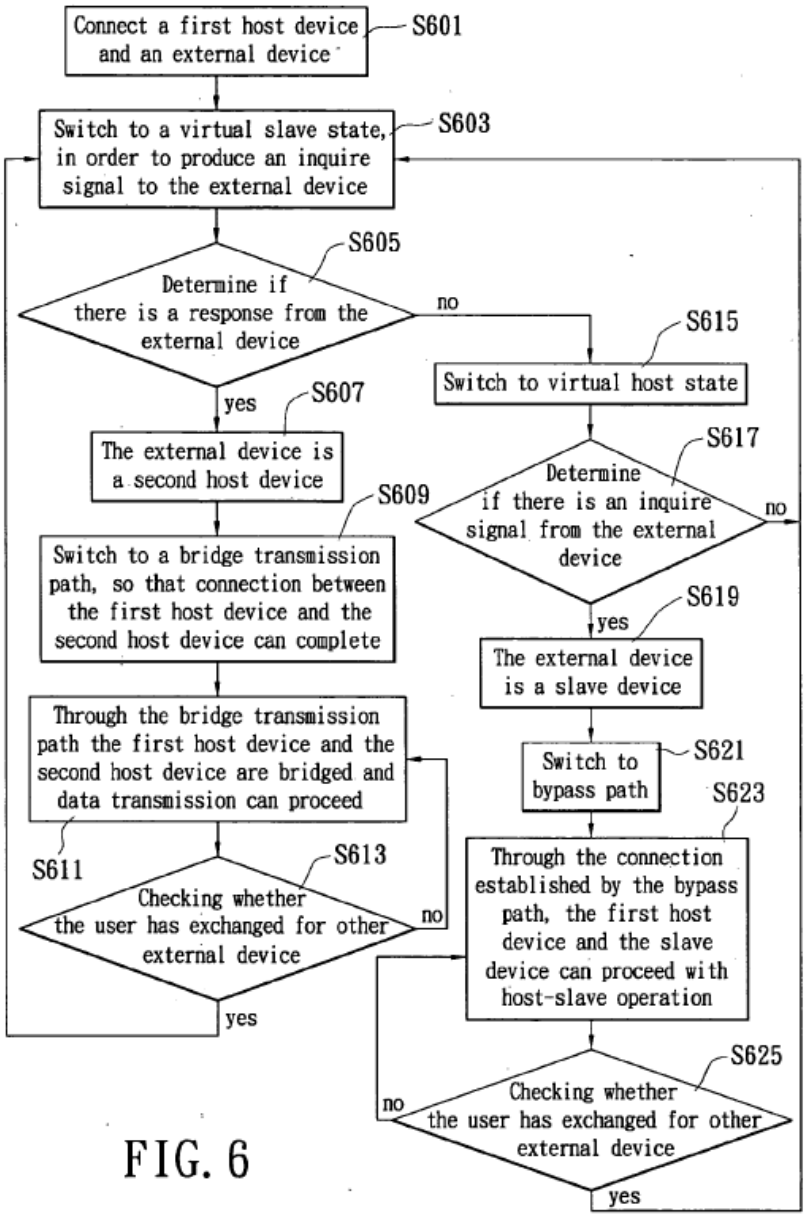

FIG. 6

(EX1015, FIG. 6.)

91. In the illustrated process, the control chip exchanges signals with the external device at least at stages S603, S605, S617; and checks for a newly inserted external device at stages S601, S613, and S625. (EX1015, FIG. 6.) In the

proposed combination, once a connected device is detected to be in device mode, the crossbar switches to a direct-to-hub path that bypasses the bridge device and disconnects it from downstream ports, as described above. In this disconnected state, the bridge device is unable to exchange signals with an external device; thus, the bridge device will never reach stages S607 or S619 in the FIG. 6 process and cannot direct the crossbar to switch paths accordingly. Moreover, because the bridge device is unable to detect a newly inserted external device; the Petition's USB hub module will remain in the device mode even if a new device is connected. This dead-end state—which the Petition wholly fails to address—renders the proposed combination incapable of meeting the claimed dynamic switching as described above.

C. The Proposed Combination Does Not Meet the Claim Limitations

1. Claims 1 and 14

92. The Petition's proposed combination fails to meet the limitations of claim 1 or analogous claim 14. Because all challenged claims depend from claim 1 or claim 14, this defect is fatal to the Petition.

a. The Proposed Combination Does Not Meet the Claimed USB Routing Switch

93. Claims 1 and 14 require a USB routing switch configured according to specific requirements. For example, the claimed USB routing switch is configured to connect a first downstream USB port to the upstream USB port

through the USB bridge when a consumer device connected to the first downstream USB port is the USB host and is configured to initiate bidirectional communication with the upstream USB port. Further, the USB routing switch is configured to connect the first downstream USB port directly to the USB hub when the consumer device connected to the first downstream USB port is configured to only respond to communication from the upstream USB port, thereby rendering the consumer device compatible with a device connected to the upstream USB port. (EX1005, claim 1.)

94. To meet these claim limitations, the Petition relies on its proposed Crossbar Implementations being able to "connect the appropriate transmission path upon detecting the downstream consumer product's operating mode (i.e., device/host)." (Petition, 60.) The Petition explains the limitation is met because "Upon detection, the appropriate crossbar control signals are asserted to connect the consumer product to the bridge (for host-to-host transmission path 54) or directly to the hub (for host to-device transmission path 48)." (Petition, 60-61.) Further, the Petition apparently relies on Chang II's "bridging detection signal" to meet these crossbar control signals. (Petition, 60-61 n. 18.)

95. But as explained above in Section IX.B, the Petition's characterization of the proposed combination is inaccurate, and the Petition thus relies on faulty premises to meet these limitations. For example, the proposed combination does

not "detect[] the downstream consumer product's operating mode (i.e., device/host)" at all. Instead, it reaches a state in which the crossbar routes the downstream consumer device directly to the USB hub, disconnecting the detection unit that generates the bridging detection signal; and rendering it unable to detect the consumer device's operating mode, let alone "connect the appropriate transmission path" or assert "the appropriate crossbar control signals," as described above. Further, the Petition relies for this element on the testimony of Mr. Welch, which is inaccurate and unreliable for the reasons described herein and should be afforded no weight. The Petition thus fails to show this claim element is met.

b. The Multiplexer Implementation Cannot Meet The USB Routing Switch

96. The Petition's element-by-element analysis of claim 1 is silent with respect to the proposed mux implementation; the Petition does not even attempt to show that this implementation would meet the claimed USB routing switch. (Petition, 46-68.) In his deposition, Mr. Welch explained why: in the mux implementation, the purported USB routing switch—the 2:1 multiplexer—has "only … one dual-role port," not a plurality of downstream ports as recited in the claims. (EX1021, 218:6-21.) For at least this reason, in addition to those described above, the mux implementation would fail to read on claim 1 or 14, or their respective dependent claims, even if it were asserted in the Petition. (EX1021, 218:6-21.)

c. The Crossbar Implementations Cannot Meet The USB Routing Switch

97. The crossbar implementations cannot meet the claims for the additional reason that they do not meet the required relationship between the components of the USB hub module. The claims require "a USB Bridge *interconnected to* the USB Hub" and "a USB routing switch *interconnected to* the USB Bridge, the USB Hub, and the plurality of downstream USB Ports."

98. To the extent the Petition argues that Hub Control Unit 46 (a subcomponent of USB Hub 40) meets the claimed USB Hub, that mapping is unsustainable. First, it contradicts the references: Chang expressly identifies USB Hub 40—not its subcomponent, Hub Control Unit 46—as its USB hub. (EX1014, [0019].) Second, it contradicts the Petition itself: in describing the crossbar implementations, Petitioner simultaneously identifies both USB Hub 46 and USB Hub 40 as the claimed USB Hub. (Petition, 46-47, 49-54; *see* EX2021, 137:10-20.) Third, it contradicts Petitioner's expert, who testified that Chang's control unit 46 does not satisfy the definition of a hub in the challenged claims. (EX2021, 215:6-23.)

99. Neither can USB hub 40 meet the claim limitations. In the corresponding litigation between the parties, Petitioner took the position (with respect to the related '037 patent) that "A POSITA would have understood that components that are part of the USB hub … cannot also be connected to it."

(EX2020, 22.) Similarly, Petitioner endorsed the position that "it [is] not logical that [Component A] and [Component B] can be ***components of*** the USB switching hub 119 that are contained within USB switching hub 119 and at the very same time be ***interconnected to*** the same USB switching hub 119." (EX2020, 22 (emphases in original).) And Petitioner's expert admitted in his deposition that Chang's bridge 52, which is internal to Chang's USB Hub 40, is not interconnected with USB Hub 40. (EX2021, 208:1-6.) Yet in the Petition, the purported USB routing switch (*i.e.*, the crossbar) is both within USB Hub 40 and interconnected to that same USB Hub 40. (Petition, 46.) Similarly, the Petition's purported USB bridge is both within USB Hub 40 and also interconnected to USB Hub 40. (Petition, 46.) This mapping is inconsistent with the scope of "interconnected to" that Petitioner and its expert have endorsed.

2. Claims 2 and 15

100. Claims 2 and 15 depend from claims 1 and 14, respectively. In addition to the reasons described above for the parent claims 1 and 14, claims 2 and 15 are not rendered obvious because the Petition's proposed combination cannot meet limitations of claims 2 and 15 requiring that the USB routing switch be configured to connect *multiple simultaneous* downstream USB devices to the USB hub.

101. As described above, the Petition relies on Chang II's control chip 13 to generate control signals that direct the crossbar to select a transmission path for a downstream USB port. However, as the Petition acknowledges, Chang II's bridge device includes only a "single port" that accepts either a host device or a slave device:

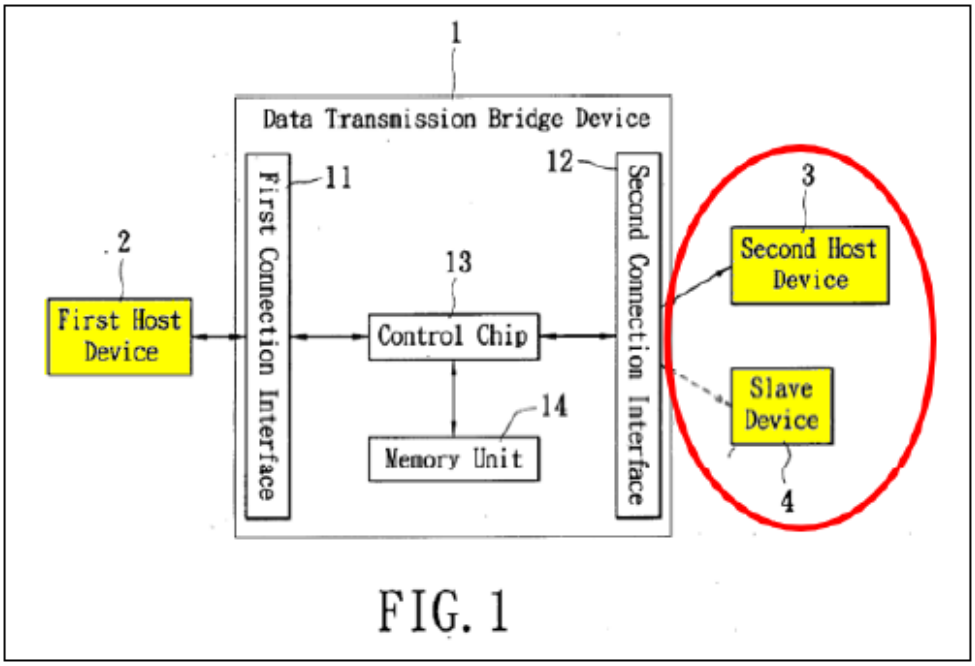

(Petition, 33-34 (annotated); EX1015, [0030], [0012].)

102. The proposed combination thus lacks the requisite control logic for configuring the crossbar to connect multiple devices (*i.e.*, on both a first downstream USB Port and a second downstream USB Port) to the USB Hub in the manner required by the claim. And the Petition does not offer any modification

that would permit Chang II's bridge to accept multiple devices. (*see* Petition at 68-70.) The proposed combination cannot meet claims 2 or 15 for at least this reason.

103. Moreover, even if Chang II were modified to detect multiple downstream device connections, the bridge device is disconnected from downstream USB ports once the crossbar selects the direct-to-hub path, bypassing the bridge, as described in Section IX.B. Even this hypothetical modification still could not meet claims 2 or 15: parent claims 1 and 14 require that the routing switch be configured to "connect the first downstream USB port directly to the USB hub." As described above, this connection bypasses the bridge and prevents the detection unit from providing the crossbar with the control signals that would be needed to simultaneously connect a second downstream device according to claims 2 and 15.

3. Claim 3

104. Claim 3 depends from claim 1 and recites that the USB hub module is configured to recognize whether the consumer device connected to the first downstream USB port is configured to act as the USB host or as a USB device and control the USB routing switch accordingly. (EX1005, claim 3.) For this claim, the Petition relies on Chang II's detection unit "automatically operating to … determine the type of device currently connected" to the port; and hypothesizes that "the detection results would control the crossbar control signals." (Petition,

71-72.) But as explained above in Section IX.B, in the proposed combination, the detection unit would be inoperable to perform any such detection if the downstream USB port is configured to act as a USB device and has been connected to the USB hub; the USB hub module is thus unable to control the USB routing switch "accordingly" as required by claim 3.

105. Additionally, the Petition speculates that the POSITA would "naturally integrate detection functionality into the hub, bridge, or switch"; but fails to set forth how the POSITA would have integrated Chang II's detection unit (on which the Petition relies) into the combination of Chang and the POSITA's knowledge, with any reasonable expectation of success. (Petition, 72.) The Petition fails to meet claim 3 for at least these reasons, in addition to the reasons described for parent claim 1.

4. Claim 4

106. The Petition's proposed combination suffers from glaring and fatal defects that render it incapable of meeting claim 4, which requires the USB hub module be configured to "dynamically switch … between a USB device mode and a USB host mode." Claim 4 is patentable in view of the Petition for this reason, in addition to the reasons discussed above for parent claim 1 from which it depends.

a. The proposed combination disconnects the bridge device from the downstream ports, rendering it incapable of dynamically switching

107. Claim 4 depends from claim 1 and requires that the claimed USB hub module be configured to *dynamically switch* operation of the plurality of downstream USB ports between a USB device mode and a USB host mode[3]. (EX1005, claim 4.) Under any reasonable interpretation, dynamically switching *between* the USB device mode and the USB host mode must at minimum mean that the USB hub module permits switching from host mode to device mode; and from device mode to host mode. To find otherwise would read out the claim term "between," which limits the claimed dynamic switching.

---

[3] Claim 4 recites: "the USB hub module is configured to dynamically switch operation of the plurality of downstream USB between a USB device mode and a USB host mode." (EX1005, claim 4.) Petitioner and Patent Owner, and their respective experts, all understand this claim language to inadvertently omit the word "ports" after "plurality of downstream USB," such that claim 4 requires that "the USB hub module is configured to dynamically switch operation of the plurality of downstream USB *ports* between a USB device mode and a USB host mode." (*See* Petition, 72-73; EX1013, ¶267.)

b. The proposed combination only detects device modes when an external device is newly connected

108. Even if the proposed combination did not result in disconnecting the bridge device from the downstream ports, as described above, the proposed combination still cannot meet claim 4 because Chang II's bridge device cannot detect a device's mode changes, making dynamic switching impossible. The Petition asserts that its proposed combination would meet the claimed dynamic switching by "detecting a mode change (*e.g.*, during an active session)" of a device that switches between a host mode and a device mode, and "making the corresponding connection" accordingly. (Petition, 72-73.) The Petition claims that a POSITA would be motivated to make this combination to "avoid unplugging/replugging products to change modes." (Petition, 72-73.)

109. However, the proposed combination relies on Chang II's control chip to detect the mode change. As discussed above, in order to detect a mode of an external device, the control chip performs the process illustrated in FIG. 6:

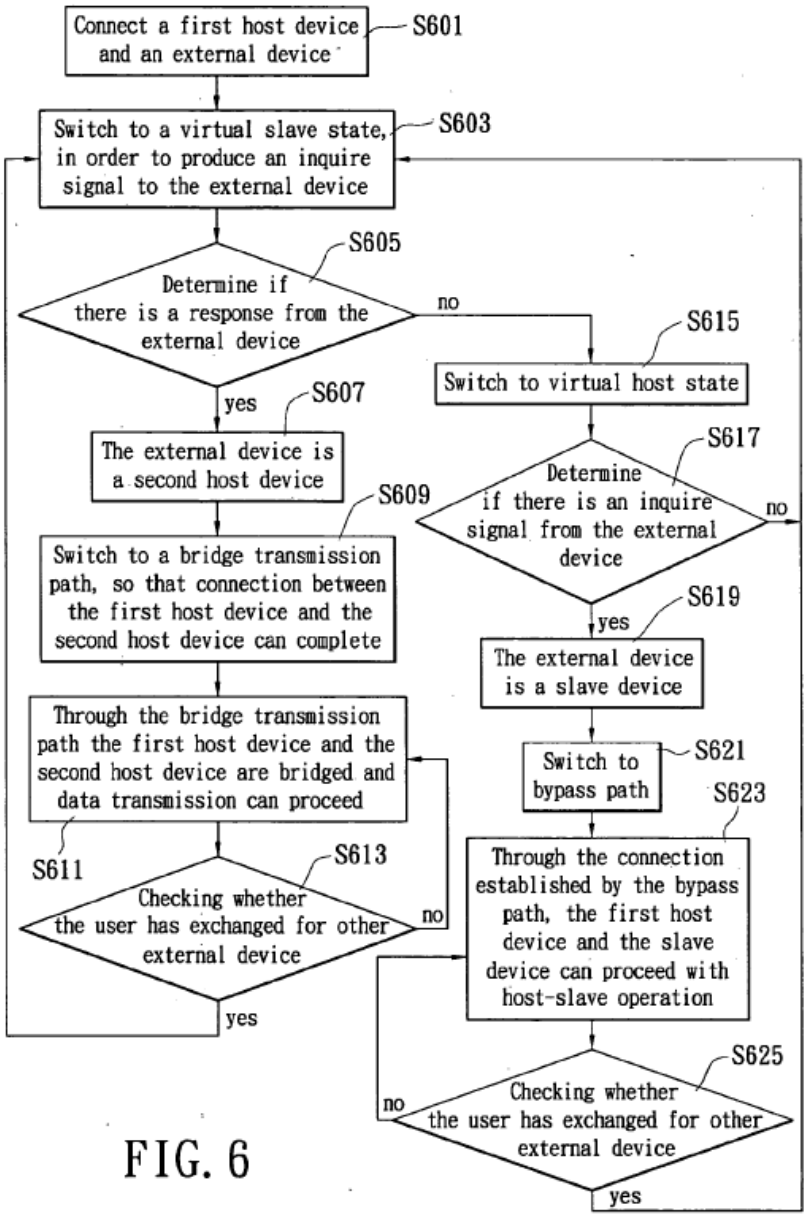

FIG. 6

(EX1015, FIG. 6.)

110. Contrary to the Petition's assumptions, Chang II's detection process does not include any ability to detect a mode change of an external device. (Petition, 72-73.) Instead, as apparent from FIG. 6, the control chip only detects

whether a device is in a host mode (S607) or a slave mode (S619) ***after*** the control chip has determined that an external device has been connected (*i.e.*, at S601, S613, or S625). (EX1015, FIG. 6.) Once a device's mode has been determined at S607 or S619, the control chip will loop at stage S613 or S625 until it has determined that the user has connected another external device. (EX1015, FIG. 6.) This is contrary to the Petition's speculation that the proposed combination can detect a single device's mode change "during an active session," or without "unplugging/replugging products to change modes." (Petition, 72-73.) Mr. Welch agreed emphatically at his deposition, characterizing it as "absolutely correct" that FIG. 6 is silent about "checking to see if a connected device has switched modes while remaining plugged in." (EX2021, 252:23-253:7

111. While Mr. Welch claims that Chang II is "'automatically and periodically' and 'constantly' checking the host/device status of a connected product," EX1013 at 265, this is misleading: Chang II only describes "automatically and periodically" switching between a virtual host state and a virtual slave state at stages S603 and S615 of the process in FIG. 6. (EX1015, [0024].) As FIG. 6 makes clear, the process will repeat stages S603 and S615 only until it determines that the external device is a host device (S607) or a slave device (S619), as illustrated by the red arrows in the below figure:

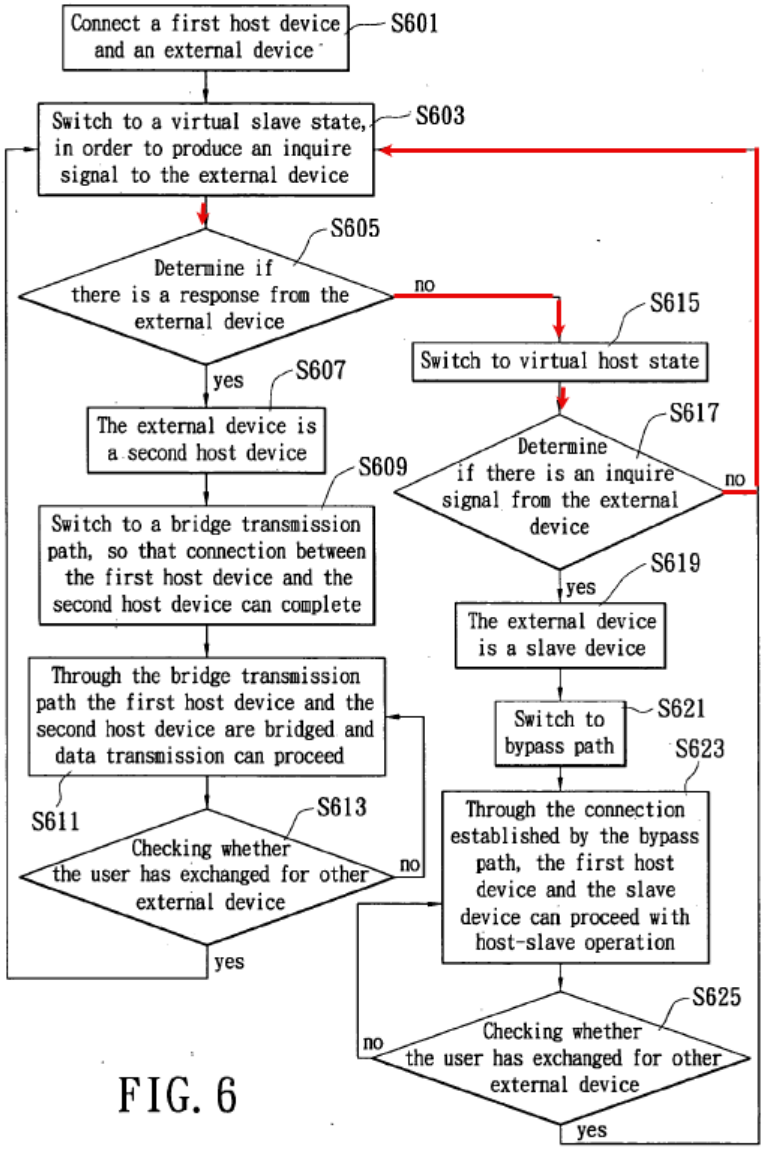

FIG. 6

(EX1015, FIG. 6 (annotated).)

112. As described above, the behavior of the control chip is governed by FIG. 6, which indicates that the detection process is not repeated until it determines that a new external device has been connected (S613, S625). (EX1015, FIG. 6.) Notably, Petitioner provides no proposed modification that would permit the

proposed combination to meet this claim limitation. Accordingly, the proposed combination cannot meet claim 4 for at least these reasons.

5. Claims 5 and 16

113. Claims 5 and 16 depend from claims 1 and 14, respectively, and further limit the configuration of the claimed USB routing switch. In claims 5 and 16, the USB routing switch must be configured to connect the consumer device to either the USB bridge or the USB hub based on whether the consumer device attached to each downstream USB port in the plurality of downstream USB ports is configured to act as the USB host or a USB device.

114. In addition to the reasons discussed above for the parent claims, Claims 5 and 16 are not rendered obvious because the Petition's proposed combination does not meet this additional limitation of the USB routing switch. The Petition disregards this limitation, and relies on its analysis of claims 1 and 2 to purportedly meet claims 5 and 16. (Petition, 73-74, 80.) As the POSITA would recognize, the language "the consumer device attached to each downstream USB port in the plurality of downstream USB ports" requires a plurality of at least two consumer devices, in order for there to be a consumer device attached to each of a plurality of downstream USB ports. The Petition's proposed combinations cannot meet this requirement that the USB routing switch be configured to connect to

multiple downstream USB devices for the reasons discussed above with respect to claims 2 and 15.

6. Claim 6

115. Claim 6 depends from claim 1 and requires that the claimed USB routing switch comprise a plurality of analog multiplexing switches. In addition to the reasons described above for the parent claim 1, claim 6 is not rendered obvious because the Petition's proposed combination fails to disclose any such plurality.

116. The Petition acknowledges that multiplexers and crossbars assume one of two forms: analog or digital. (Petition, 74.) And the Petition, relying on Mr. Welch's testimony, asserts that "common off-the-shelf components" such as the MAX4989 (EX1063) and FSUSB63 (EX1060) were *analog* multiplexing switches that could have been used in the proposed combination. (Petition at 74 (citing EX1013, ¶ 271).) However, with respect to claim 10, the Petition and Mr. Welch characterize the crossbar control signals and the MAX4989 and FSUSB63 switches as "*digital* routing logic"—contradicting their description of those same components as analog for claim 6. (Petition, 79 (citing EX1013, ¶¶287-288).) (EX1013, ¶287.) Further, Mr. Welch asserts that such digital routing signals are "typical of most (*if not all*) multiplexer and crossbar switches"—undermining his own testimony with respect to claim 6. (EX1013, ¶287.) The Board should give

no weight to Mr. Welch's contradictory testimony, or to the Petition that relies on it, for either claim 6 or claim 10.

117. Moreover, even if analog multiplexers were "common off-the-shelf components," Petition at 74, the Petition fails to identify any plurality of analog multiplexers that could be combined with the combination's admitted digital signals—including Chang II's CPU 135, which "receives the host/device detection signal to control[] switching," *see* EX1013 at ¶288—or how the POSITA would be motivated to make any such combination of these two disparate types with any reasonable expectation of success. (EX1015, [0039].) The Petition fails with respect to claim 6 for these additional reasons.

7. Claim 9

118. Claim 9 depends from claims 1 and 8 and requires that endpoint buffers of the USB bridge be configured to support a USB data connection pipe between an infotainment system and the consumer device. (EX1005, claim 9.) Claim 9 is not rendered obvious because the Petition's proposed combination cannot meet this required configuration of the USB bridge. Specifically, in order to communicate data between an infotainment system and the consumer device, the claimed USB data connection pipe must meet specific technical requirements unaddressed by the Petition. In fact, the Petition fails to address the infotainment system limitation at all, other than to speculate that having an infotainment system

as Chang's upstream host "would have been obvious to a POSITA." (Petition, 78-79.)

119. Neither Chang I nor Chang II disclose or relate to infotainment systems, or to vehicles; the Petition's citations to generic descriptions of infotainment systems for vehicles thus fail to support that a POSITA would have modified the Petition's proposed combinations to incorporate such systems in a manner that meets the claim limitations. (Petition, 78-79.) Moreover, even if the proposed combinations could be modified to include an infotainment system, the Petition makes no attempt to show that the modification would meet endpoint buffers configured to support the claimed USB data connection pipe. (Petition, 78-79.)

120. The POSITA would have recognized that infotainment systems present unique difficulties for hubs with host-to-host functionality. At the time the '962 patent was filed in 2013, the POSITA would understand automotive infotainment systems with USB support to require more functionality than a radio, CD or cassette player; they were also expected to support mapping, video, and screen mirroring functionality. (*See e.g.*, EX1005, 1:56-61 (describing vehicle infotainment systems as accessing "streaming music, video and other services" provided by consumer devices, such as smartphones).) If the data for these

functions is being provided by a USB device—as described in the specification—it must be transferred in real-time, i.e. streamed, to the head unit for display.

121. As the POSITA would recognize, a USB data connection pipe between such infotainment systems and consumer devices would have specific and heightened requirements for latency and bandwidth; however, the Petition makes no attempt to establish that such requirements are met by the proposed combination. The USB specification itself recognizes the unique challenges presented by streaming data and has defined a specific type of data transfer pipe—isochronous or "ISO"—which is capable of transferring constant-rate, time-critical data that, unlike the other types of USB data transfers, is not retried if there is an error. (EX1018, 4.7.4.) But none of the prior art USB bridges identified by Petitioner support such isochronous data transfer pipes. (EX1035, 1 ("Supports USB Full/High Speed Control/Interrupt/Bulk Endpoints Transfer"); EX1036, 14 (listing only control, bulk, and interrupt endpoints); EX1037, 1 (same).) Instead, because those bridges were not designed to handle the time-sensitive transfers required in the streaming context, those bridges include only control, interrupt, and bulk data transfers. (*Id.*)

122. The Petition offers no attempt to explain how the proposed combination could be modified to support the isochronous transfers required by infotainment systems, or how a POSITA would have been motivated to make such

a modification with any reasonable expectation of success. The proposed combination accordingly fails to meet claim 9.

8. Claim 10

123. Claim 10 depends from claim 1 and recites that the USB routing switch comprises digital routing logic. Claim 10 is not met for at least the reasons described above for the parent claim. In addition, as discussed above for claim 6, Mr. Welch's testimony is incoherent with respect to the switching elements of the proposed combination, and whether those switching elements are analog or digital. For example, Mr. Welch characterizes the MAX4989 and FSUSB63 switches as analog switches with respect to claim 6 (which recites analog switches); but characterizes those same components instead as digital switches with respect to claim 10 (which recites digital switches). (Petition at 74, 79; EX1013, ¶¶271, 287-288 Moreover, to the extent the Petition's switches are analog switches, neither Mr. Welch nor the Petition offers any indication of how they would be combined with digital signals from, *e.g.*, Chang II's CPU 135 to meet the limitations of claim 10. (*See* EX1013, ¶288.) As with claim 6, Mr. Welch's contradictory and self-serving testimony is unreliable and should be given no weight; absent reliable expert support, the Petition fails to establish how claim 10 is met.

D. The POSITA Would Not Have Been Motivated to Modify Chang in View of Chang II and the POSITA's Knowledge To Meet The Claim Limitations

1. The Proposed Combination Would Change the Principles Under Which The Prior Art Was Designed to Operate And Would Render The Prior Art Inoperable For Its Intended Purposes

124. I understand that if a proposed prior art combination would "change the 'basic principles under which the [prior art] was designed to operate,'" or would "render the prior art 'inoperable for its intended purpose,'" then the proposed combination is insufficient to render the claims *prima facie* obvious. *Plas-Pak Indus., Inc. v. Sulzer Mixpac AG*, 600 F. App'x 755, 758 (Fed. Cir. 2015)(internal citations omitted); *see also McGinley v. Franklin Sports, Inc.*, 262 F.3d 1339, 1354 (Fed. Cir. 2001) (inoperative combinations of references "teach away from the combination and thus cannot serve as predicates for a prima facie case of obviousness").

125. The proposed combination improperly transforms the references, removing key functionality, and cannot support a *prima facie* case. As the Petition repeatedly emphasizes, Chang II repeats two "fundamental concepts": "(1) host/device detection and (2) selecting between two different transmission paths." (Petition, 28-29 (citing EX1015, [0024], [0046])). These concepts enable Chang II's express "main feature": a control chip that can automatically detect the type of device connected and internally switch to the appropriate transmission path (*i.e.*,

the bridge transmission path or the bypass path). (Petition, 28-29, 33, 38, 58; EX1015, [0021].) But as described above, the Petition's proposed combination would be unable to "automatically detect" the type of device once the hub module has been placed into device mode, and to switch to the appropriate transmission path accordingly (*e.g.*, from a device mode back to a host mode).

126. Thus, the proposed combination would render Chang II inoperable for its admitted main feature and intended purpose. And with respect to Chang, limiting the user's ability to connect a consumer device to a USB hub would defeat Chang's intended purpose of providing "a device capable of easily establishing a connection between a computer and another computer." (*See* EX1014, [0002]; EX1013, ¶178.) Moreover, by replacing the existing internal switching functionality of Chang II with an external switching element (a crossbar), the proposed combination physically bypasses Chang II's bridge circuit, thus changing Chang II's principle of operation: utilizing its switching circuitry to switch to the appropriate transmission path. (Petition, 30-33; EX1013, ¶¶160-165.)

2. The Proposed Combination Would Impair Usability And Functionality And Undermine USB Goals

127. The proposed combination suffers from additional defects that no POSITA would be motivated to incur. As described above, the proposed combination enters a state from which it cannot return: Chang II's control chip 13 is physically disconnected from the downstream USB ports (and any devices

connected to those ports), and can no longer perform the process of Chang II's FIG. 6 to determine whether the connected device is in a host mode. Further, Chang II's control chip 13 cannot re-execute this process unless and until the control chip is somehow reconnected to the downstream USB port—an operation wholly unaddressed by the Petition. Additionally, as described above, the proposed combination would be unable to properly detect new external devices connected to the bridge device. This would impair usability and result in confusion, because the proposed combination would respond to user input in a manner inconsistent according to users' expectations—such as by retaining an out-of-date, and perhaps inapplicable, USB mode when a new device is connected (*e.g.*, a direct-to-hub connection for a newly inserted device in host mode). Moreover, the proposed combination would remove existing USB hub functionality, including the ability to connect and reconnect USB devices in host mode or device mode, present in Chang and Chang II. No POSITA would thus be motivated to modify Chang and Chang II in the manner proposed.

128. Furthermore, as described above, the proposed combination limits or disables "hot-swapping" functionality, by removing Chang II's ability to detect newly inserted downstream devices. But as the USB 2.0 specification demonstrates, support for "dynamically attachable and reconfigurable peripherals" was a key design feature of USB. (EX1018, 41.) Similarly, Mr. Welch identified

"Support [for] hot plug and unplug" as motivation for the development of USB. (EX1013, ¶51.) The proposed combination's loss of functionality would thus undermine the goals of USB generally, and would defeat the '962 patent's goal of maintaining "compliance to USB protocols and architectures." (EX1005, 6:12-13.) No POSITA would be motivated to implement this combination.

3. The proposed combination would introduce unnecessary complexity, redundancy, and additional costs

129. The proposed combination is wasteful and inefficient. As described above, the Petition takes existing USB solutions in Chang and Chang II; adds duplicative switching components and new electronic hardware; and disregards existing components, for no reason other than to conjure a hindsight version for the challenged claims. For example, as described above, the Petition proposes modifying Chang's USB hub by replacing its ports with new dual-role ports, and applying the bridge device of Chang II to the existing bridge device of Chang.

130. Even though Chang II already includes, as its "main feature," circuitry for switching between two transmission paths, EX1015 at [0021], the Petition proposes *further* modifying the Chang/Chang II combination to insert additional switching hardware, inside and outside of Chang's hub, *e.g.*:

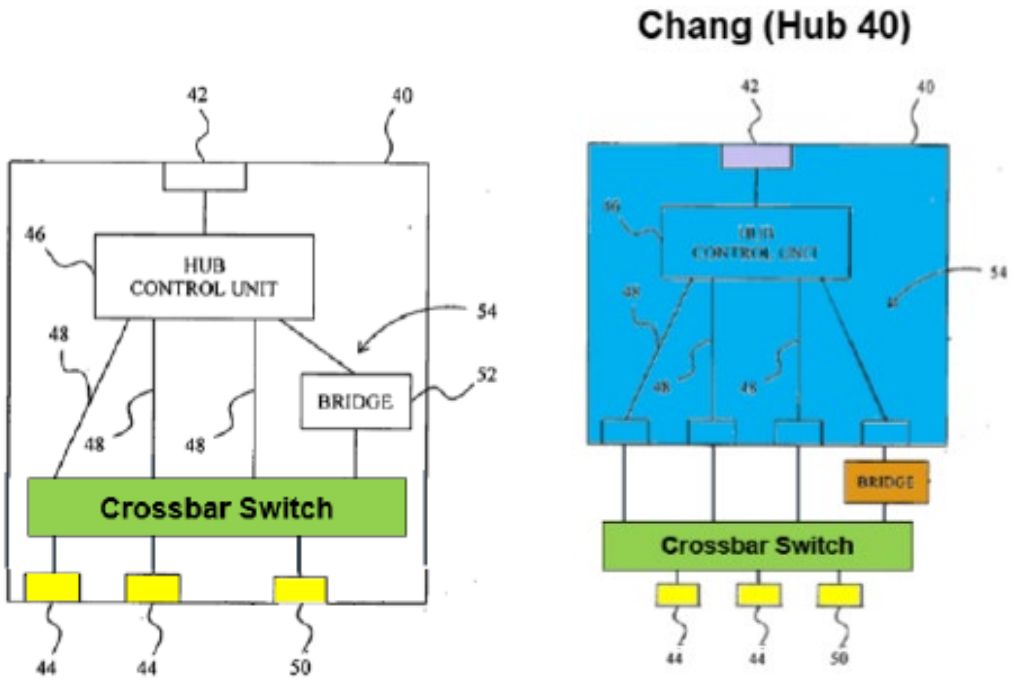

(Petition, 44.)

131. As described above, the proposed combination uses the new switching hardware as a replacement for Chang II's existing switching circuitry. For example, the Petition explains that when the crossbar switches a USB port to a direct-to-hub path, the switch "bypasses the bridge" of Chang II in order to "render the consumer device compatible with a device connected to the upstream USB port." (Petition, 67.) In this combination, the Chang II control chip circuit is left intact, but neither the bypass circuit unit 133, nor the existing switching circuitry connecting to the bypass circuit unit, are utilized:

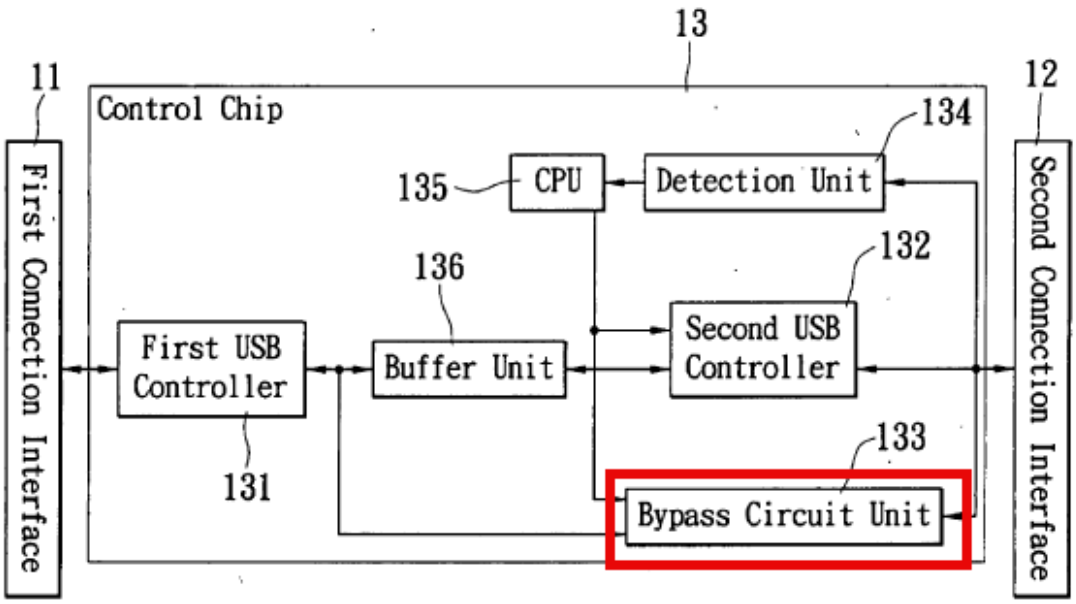

FIG. 5

(EX1015, FIG. 5 (annotated).)

132. Similarly, the proposed combination, at least in some implementations, introduces additional ports (44, 50) to Chang's USB hub, which already includes ports; and extends the circuitry outside Chang's existing hub enclosure 40:

Chang (Hub 40)

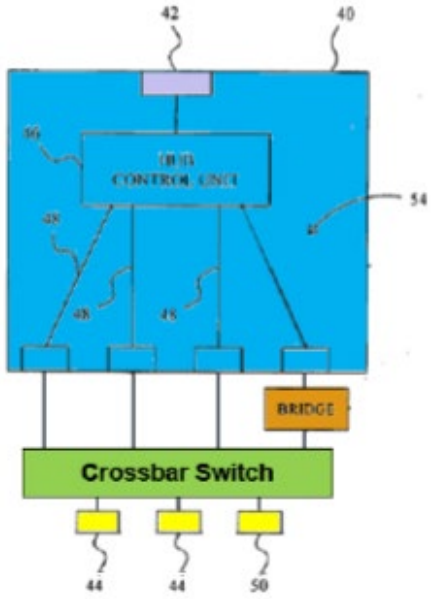

(Petition, 44.)

133. In at least these instances, the proposed combination introduces redundant components with no clear benefit; adds unnecessary complexity; and wastefully leaves existing components unused or underutilized. This inefficiency brings with it real costs, as Petitioner's expert does not dispute (and did not consider in his analysis)—potentially including, for example, expenses associated with manufacturing, purchasing, integrating, and maintaining components; additional bulk and power consumption; unnecessary heat dissipation; and overall complexity. (See EX2021, 235:19-24, 236:5-22, 237:7-16, 240:24-241:18.) No POSITA would be motivated to combine the prior art in a manner that introduces such costs and complexity unnecessarily. Moreover, the proposed combination

would undercut key goals of Chang and Chang II: simplicity, efficiency, and convenience. (EX1014, [0002], [0003], [0024]; EX1015, [0010], [0021].) Chang II thus discourages the Petition's proposed combination.

4. The POSITA Would Not Have Any Reasonable Expectation Of Success In Combining The References

134. The Petition additionally fails to establish a *prima facie* case of obviousness because the POSITA would have no reasonable expectation of success in combining the references as proposed by the Petition to achieve the claimed invention. *In re Merck & Co., Inc.*, 800 F.2d 1091, (Fed. Cir. 1986). For the reasons described above, the proposed combination would be incapable of meeting the claim limitations, and would suffer from critical defects in usability, including the loss of detection functionality once a device mode has been entered. The Petition fails to acknowledge these defects, let alone to offer any evidence of how a POSITA would be able to combine the prior art with any reasonable expectation of success.

X. GROUND II: CLAIMS 11-13 AND 18-19 ARE NOT RENDERED OBVIOUS BY CHANG IN VIEW OF CHANG II, AN96527, AND POSITA KNOWLEDGE

135. Ground II challenges dependent claims 11-13, which depend from claim 1; and claims 18-19, which depend from claim 14. Ground II fails to render obvious any of these claims for at least the reasons discussed in Section IX with respect to Ground I and parent claims 1 and 14. The addition of the AN96527

reference, which is an application note describing implementations of USB Type-C, cannot correct the deficiencies of the Chang and Chang II references, in view of the POSITA's knowledge. (*See* EX1064.) This is at least because the AN96527 reference is silent regarding USB routing switches, let alone the particular configuration of a USB routing switch recited in claims 1 and 14 and not taught by the remaining references, as described above.

136. Further, The POSITA would not have been motivated to modify Chang in view of Chang II, AN96527, and the POSITA's knowledge to meet the claim limitations for at least the same reasons discussed above for Ground 1. That is, the proposed combination of Ground II suffers from the same defects discussed for Ground 1—*e.g.*, improper hindsight bias, rendering the prior art inoperable for its intended use, and introduction of complexity, redundancy, and additional costs—and the introduction of yet another reference, AN96527, is irrelevant to and does nothing to mitigate those defects. Ground II fails for at least these reasons.

XI. SECONDARY CONSIDERATIONS FURTHER SUPPORT THAT THE CLAIMS ARE NON-OBVIOUS

137. I understand that Courts have provided a number of additional considerations when determining whether a particular combination of references was obvious at the time of the claimed invention. These "objective evidence of nonobviousness includes copying, long felt but unsolved need, failure of others, commercial success, unexpected results created by the claimed invention,

unexpected properties of the claimed invention, licenses showing industry respect for the invention, and skepticism of skilled artisans before the invention." *In re Rouffet*, 149 F.3d 1350, 1355 (Fed. Cir. 1998) (internal citations omitted).

138. I understand further that the Patent Owner has provided such evidence of nonobviousness, including with respect to long-felt but unsolved need; failure of others; skepticism of skilled artisans; commercial success; industry praise; and copying, with respect to Aptiv's commercialization of the '962 patent. In my view, such evidence supports my views, expressed herein, that the challenged claims are not unpatentable.

A. There are numerous secondary indicia of non-obviousness

2. Long-felt but unsolved needs

139. In 2010, Apple partnered with BMW to develop a product referred to as "iPod Out" which would allow an iPod or iPhone to connect with an in-car display and provide a standardized, Apple-provided user interface.[4] While iPod Out's GUI only supported streaming music, it laid the groundwork for what would

[4] *See e.g.,* https://techcrunch.com/2010/07/13/ios-4s-hidden-ipod-out-feature-brings-iphone-support-to-your-car-without-the-messy-third-party-ui/ (last accessed Oct. 22, 2024); https://www.edmunds.com/car-technology/a-better-way-than-bluetooth.html (last accessed Oct. 22, 2024).

eventually be known as CarPlay. (*Id.*) Both iPod Out and CarPlay require that the iPhone (or iPod) act as a host capable of initiating communication with other devices in the network. *See e.g.,* EX2029 (addressing the host requirement of iPod Out); EX2041, 91:5-92:1 (Microchip's technical expert at trial testifying to CarPlay's host requirement).

140. From my review of the trial record, I understand that automakers demanded three features for any viable CarPlay solution. (EX2041, 139:16-22 (Microchip's technical expert).) First, the solution must allow for only a single USB data lane to the automotive infotainment system (often called the "head unit"). (*Id.*) Second, the solution must allow a driver to operate CarPlay by plugging their phone into any of the downstream ports; that is, there are no designated CarPlay ports. (*Id.*) Finally, automakers wanted to be able to operate CarPlay while still offering USB data connections on the ports to which the iPhone running CarPlay was not connected. (*Id.*) This final requirement was often referred to in the record as "persistent USB."

141. The particular mix of the three requirements was difficult because under a traditional USB network, only one device could be the USB host. Once CarPlay and its host-requirement was announced, USB suppliers generally acknowledged two approaches. The first was a "dual upstream" solution in which the head unit had two separate controllers—one host controller and one OTG

controller—and two separate USB networks. (EX2037, 19.) This arrangement maintained downstream data connectivity on non-CarPlay ports, but did not support CarPlay on non-OTG ports and did not satisfy the requirement of a single upstream connection to the head unit. (*Id.*) The second approach was to use OTG or some other role-reversal technology to reverse the direction of the USB connection between the head unit and the consumer device. (EX2037, 20.) When coupled with routing switches, this would support CarPlay on every port and only require a single line to the head unit but would turn all other downstream ports into charging-only ports when CarPlay was in use. (*Id.*) Neither of these solutions, however, could provide all three of the features automakers wanted.

3. Failure of others and skepticism of skilled artisans

142. Despite its experience and manpower, Microchip's engineers repeatedly expressed frustration with automakers' requirements, with one going so far as to say that a solution addressing all three requirements "may be physically outside the capabilities of ANY USB system." EX2005, 1. He went on to explain that "you cannot do CarPlay AND own the other ports with one USB data lane." EX2005, at 2. "If [automakers] want to have data capability, [they] will have to require 2 USB lanes to the Head Unit. . . . This is a trade off, more cables with data, or one cable with dedicated charging ports." *Id.* I understand these statements to express strong skepticism toward any solution that would allow

persistent downstream data connectivity without a second upstream data connection to the head unit.

143. Even once Microchip learned of Aptiv's solution, it continued to be skeptical that the solution could work in a reliable way, stating that it was "completely NON-STANDARD USB" that "goes against the primary requirement of USB." EX2009, at 1. Microchip recognized the complexity of the solution, noting that "[t]hese hosts will be acting independently of each other but will need to maintain USB specifications/timing/time-outs/HID / adequate throughputs as if it was a single bus." *Id.* As a result, they believed that it "[c]ould be demo'd but no way it can be guaranteed." *Id.* I understand these statements to express that Aptiv's solution was complex and fragile and that Microchip did not believe that it would work in a production vehicle setting.

144. Based on this evidence, it is my opinion that there was significant skepticism in the field regarding the feasibility of a system that would permit persistent downstream USB connectivity with only a single upstream connection to the automotive head unit.

4. Copying

145. I have reviewed the evidentiary record and concluded that Microchip developed its own products by copying the core components and operation of Aptiv's Boston 2 chip, including its host-to-host bridge and USB routing switches.

By copying the functionality of Aptiv's product, Microchip was itself able to offer USB hub chips capable of supporting CarPlay on every port without a second upstream connection to the head unit and without disrupting the USB data connections on the non-CarPlay downstream ports.

146. I have reviewed trial testimony and internal Microchip documents used at trial demonstrating that, at least as early as July 2014, Microchip investigated the operation of what it then referred to as the "Unwired solution." Microchip's VP overseeing its USB and Networking Group, Mitch Obolsky, testified that Microchip's customers requested a solution similar to Aptiv's. *See e.g.,* EX2040, 233:22-9; EX2033, 1. He also testified that Microchip began investigating the "Unwired solution" at that time. EX2040, 234:10-235:6.

147. In July 2014, Microchip's engineers and sales team put together a presentation explaining Microchip's understanding of the "Unwired solution" at that time. (EX2031.) The information used to put together this presentation appears to have come from Microchip's customers, both head unit manufacturers and the manufacturers of automotive USB hub components (known in the industry as "breakout boxes" or "BoB"). (*Id.*, 6.) Microchip diagramed its understanding of Aptiv's solution:

Carplay® - Hypothesis

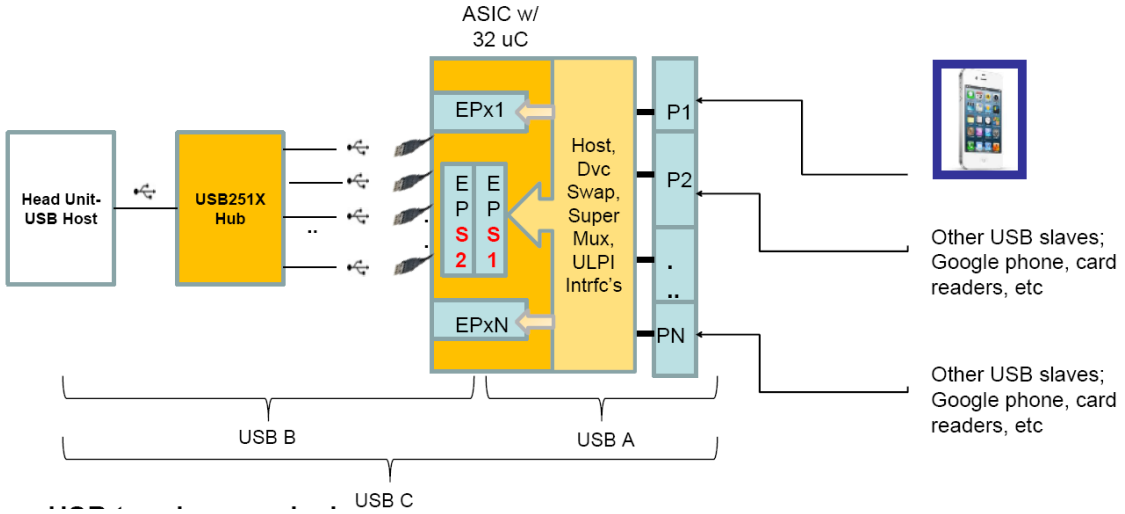

(EX2031, 7.) This diagram shows that Microchip's investigation had garnered an understanding of the basic building blocks of the Aptiv solution, in particular the USB bridge (EPS1 and EPS2) and the USB routing switch (Super Mux).

148. Ultimately, Microchip concluded that Aptiv's solution was the only feasible way to meet all three of automakers' requirements. (EX2040, 240:1-241: ("And as we thought about it, we said well, okay, we can't do it a different way, then what is Unwired doing?").) As a result, Microchip decided to launch its own project to develop a "spoofed" solution (its derogatory description of Aptiv's approach) at the end of 2014 and early 2015. The diagram of Aptiv's approach was Microchip's starting point for that project. (EX2032.)

149. I have reviewed Microchip's product brief and data sheet for its own multi-host CarPlay solution and concluded that that solution directly mirrors

Aptiv's. That diagram, like Aptiv's, includes a host-to-host USB bridge (what Microchip ultimately refers to as a "multi-host endpoint reflector") and a USB routing switch. In the diagram below, the USB bridge is titled "multi-host reflector" and the USB routing switch is comprised of the set of multiplexing switches represented by trapezoids:

FIGURE 2-1: INTERNAL BLOCK DIAGRAM

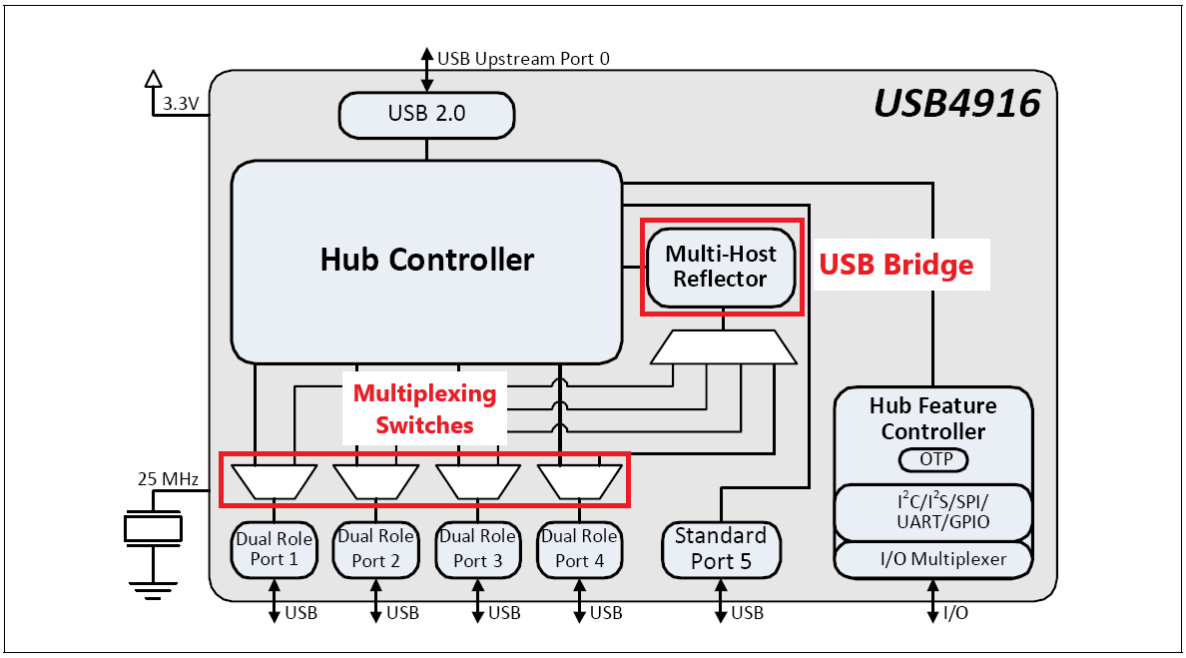

(EX2030, 1, 6 (Annotated).) And in the diagram below, the USB bridge is represented by the set of endpoints alongside the "mirror" and the USB routing switch by the block labeled "PMUX":

Multi-Host Device Controller

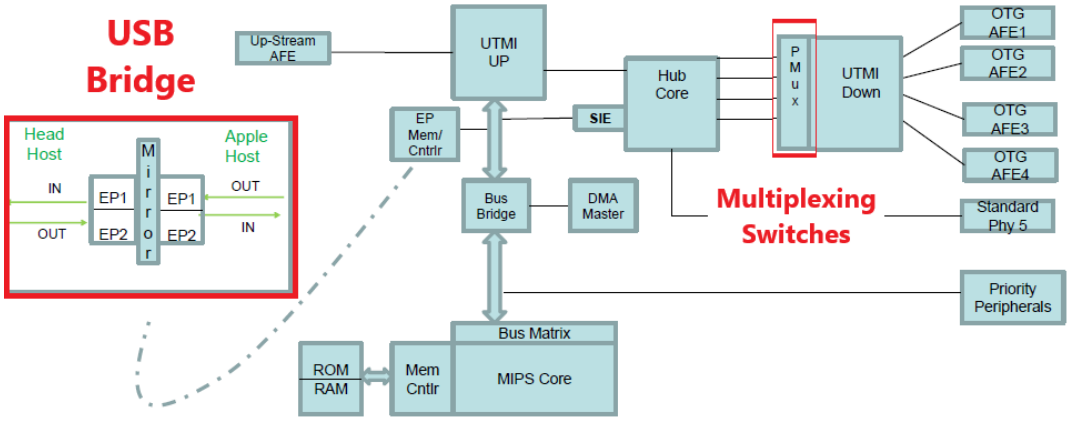

- Single upstream port
- 5 downstream ports; 4 CarPlay capable, 1 standard (CR or hub expansion)
- Priority peripherals – I2C, SPI, UART, I2S

(EX2034, 5 (annotated).)

150. From my review of this documentation, it is my opinion that Microchip's USB491X line of chips directly copies the Aptiv solution and operates in substantially the same manner. Like the Aptiv solution, Microchip's USB491X chips utilize a USB bridge and USB routing switch to allow a user to plug into a downstream port a consumer device operating in USB host mode. When this occurs, the consumer device's connection is routed through the USB bridge to a hub, then on to an upstream host. When a consumer device plugged into a downstream port is operating in USB device mode, the connection is routed directly to the hub and bypasses the USB bridge. And, in Microchip's USB491X

chips, a user can plug in both a USB host and a USB device and both with work as intended. This functionality is enabled by the innovative solution taught in the challenged patents.

151. I have also reviewed an email from one of Microchip's engineers, Mark Bohm, to Mr. Obolsky in which he states that he "received the new GM b.o.b. that contains the Unwired device" and that Microchip can "decap" the chip. (EX2035, 1.) Decapping is the process of etching away the cover from an integrate circuit so that the internal workings of the chip can be studied. I therefore understand Mr. Bohm's email to be an offer to study the actual connections within Aptiv's Boston 2 chip. From his trial testimony, I also understand that this decapping was actually performed, which would have granted Microchip a detailed understanding of the inner workings of Aptiv's solution. (EX2040, 186:22-188:12.)

B. There is a nexus between the secondary considerations and the claims of the '962 patent

152. I understand further that "the evidence of secondary considerations must have a 'nexus' to the claims, *i.e.*, there must be 'a legally and factually sufficient connection' between the evidence and the patented invention." *Fox Factory, Inc. v. SRAM, LLC*, 944 F.3d 1366, 1373 (Fed. Cir. 2019). Provided below is a chart illustrating, on a per-limitation basis, how Aptiv's Dual Role Hub meets all limitations of at least claims 2 and 15.

i. ’962 patent, claim 2

153. Claim 2 of the ’962 Patent is directed to “The USB hub module according to claim 1, wherein the USB routing switch is configured to connect the first downstream USB port to the USB hub through the USB bridge when a first consumer device connected to the first downstream USB port is acting as the USB host, and wherein the USB routing switch is configured to simultaneously connect a second downstream USB port of the plurality of downstream USB ports directly to the USB hub when a second consumer device connected to the second downstream USB port is acting as a USB device, thereby rendering the first and second consumer devices compatible to communicate simultaneously with the upstream USB port.”

154. In my opinion, this claim directly addresses the functionality that drove customer demand, commercial success, and industry praise and that frustrated others in the field. In particular, it is directed to the ability to “simultaneously connect” two consumer devices—one acting as a USB host and one acting as a USB device—to a USB hub and thereby allow both devices to simultaneously have a data connection with an upstream USB port—that is, persistent downstream USB connectivity.

155. In the chart below, I provide an analysis of how Aptiv’s dual role hub embodies each limitation of Claim 2 of the ’962 Patent.

Limitation	Aptiv Dual Role Hub

1[P]: "A Universal Serial Bus (USB) hub module, comprising:"	To the extent the preamble is limiting, The Boston 2 chip in Aptiv's dual role hub contains a USB hub module, as shown in the documentation below:
	 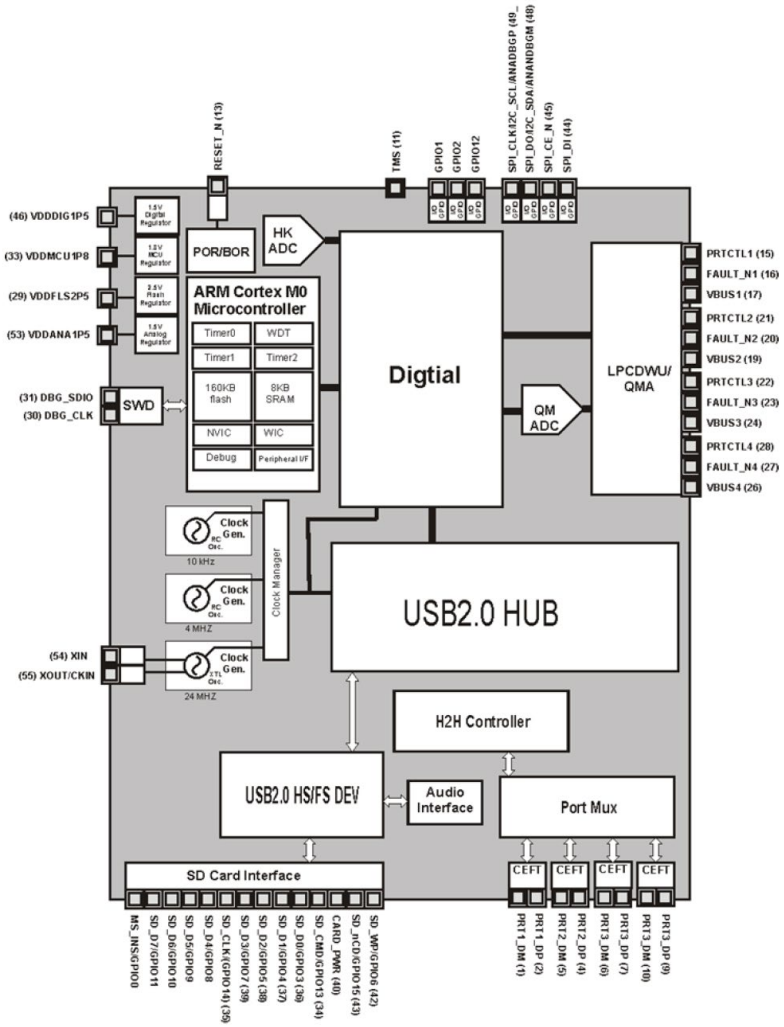
	
	(EX2023, 20.)
	
	Digital:
	• USB HUB and Digital PHY IP Core
	  ○ Routes data from the USB upstream port to downstream port, configures downstream port.
	• USB Device IP Core
	  ○ Implements a USB Device with two interfaces: Mass Storage Class for SD Card Host and HID Class for a microcontroller bridge. Acts as a USB protocol decoder and data buffer.
	• Host to Host Bridge Core

	○ Provide two additional USB device controllers and data bridging functions to allow an external USB device attached to one of the "downstream" ports to transfer data to/from the upstream USB host while the external device is itself acting as a USB host (EX2023, 21-22.) Furthermore, I agree with Dr. Welch's assessment that in the context of the claims, the elements of a hub module could all be located on a single chip. (EX2021, 286:23-287:6.)
1[A]: "an upstream USB port;"	The Boston 2 chip in Aptiv's dual role hub contains an upstream USB port, as shown in the documentation below: 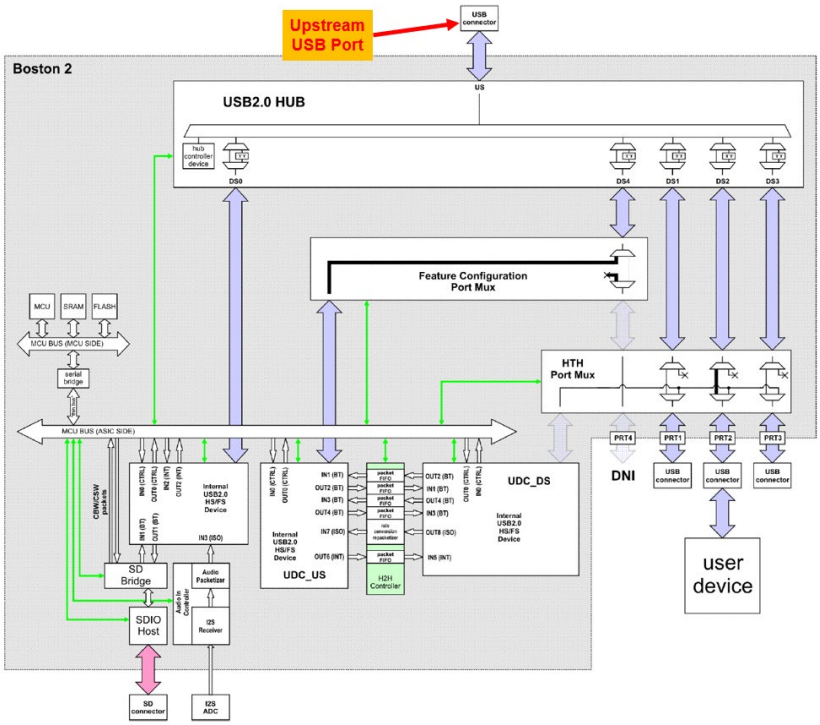 (EX2023, Fig. 7-35(a) (Annotated).)

	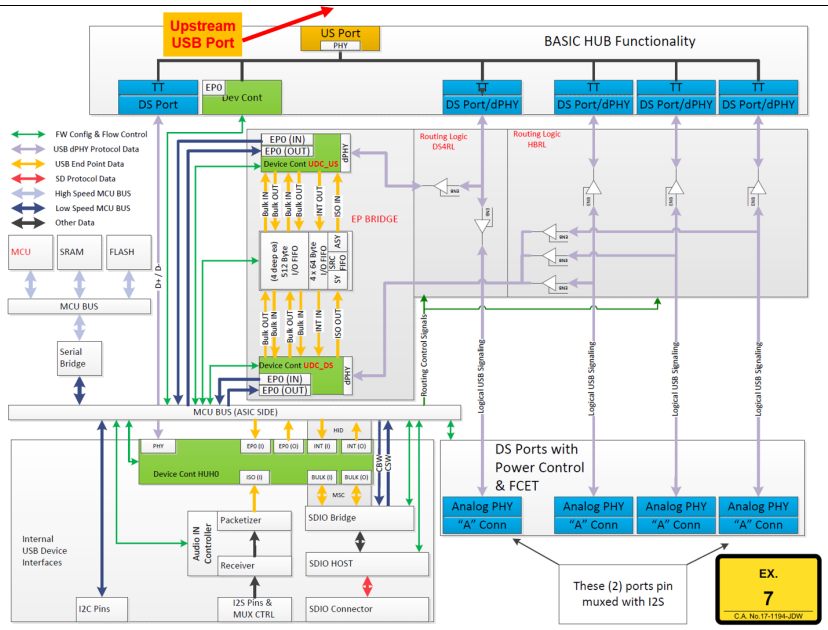 (EX2024 (Annotated).)
1[B]: "a plurality of downstream USB ports;"	The Boston 2 chip in Aptiv's dual role hub contains a plurality of downstream USB ports, as shown in the documentation below:

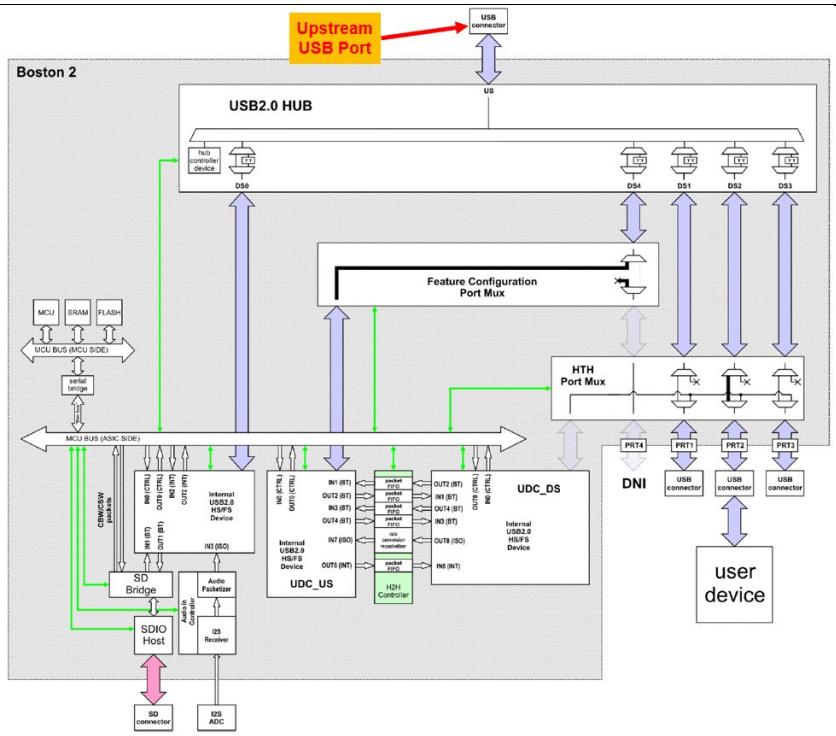

(EX2023, Fig. 7-35(a) (Annotated).)

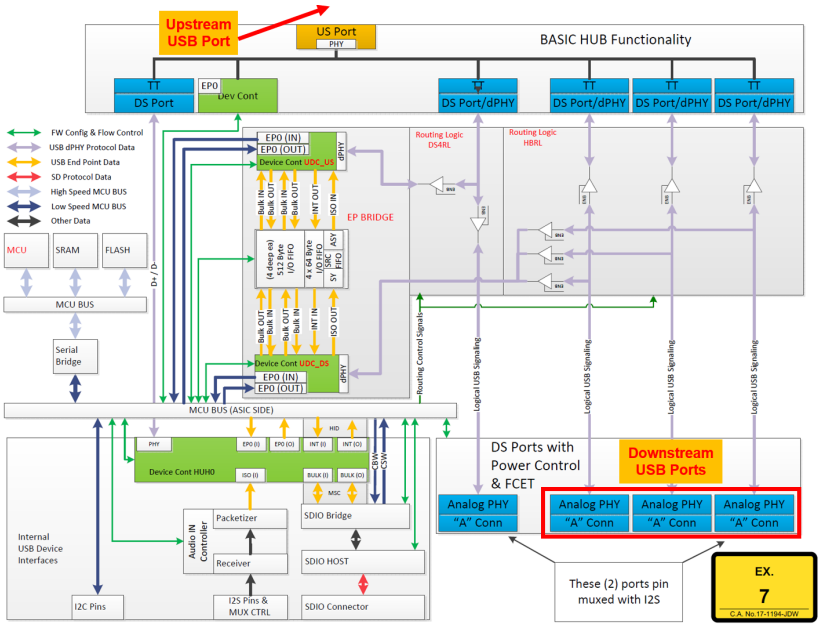

(EX2024 (Annotated).)

1[C]: "a USB hub interconnected to the upstream USB port and the plurality of downstream USB ports,"	The Boston 2 chip in Aptiv's dual role hub contains a USB hub interconnected to the upstream USB port and the plurality of downstream USB ports, as shown in the documentation below: 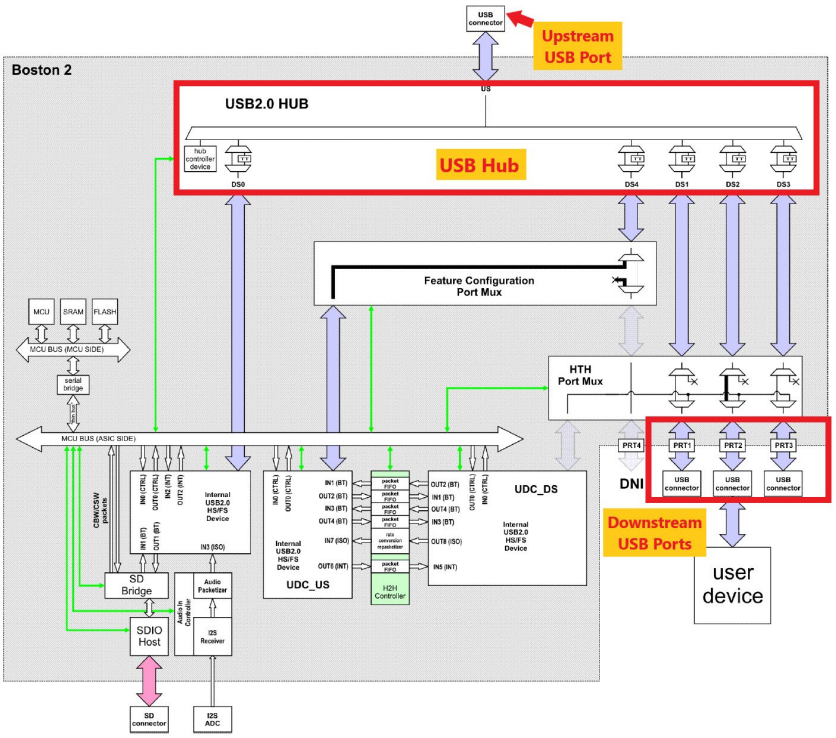 (EX2023, Fig. 7-35(a) (Annotated).)

	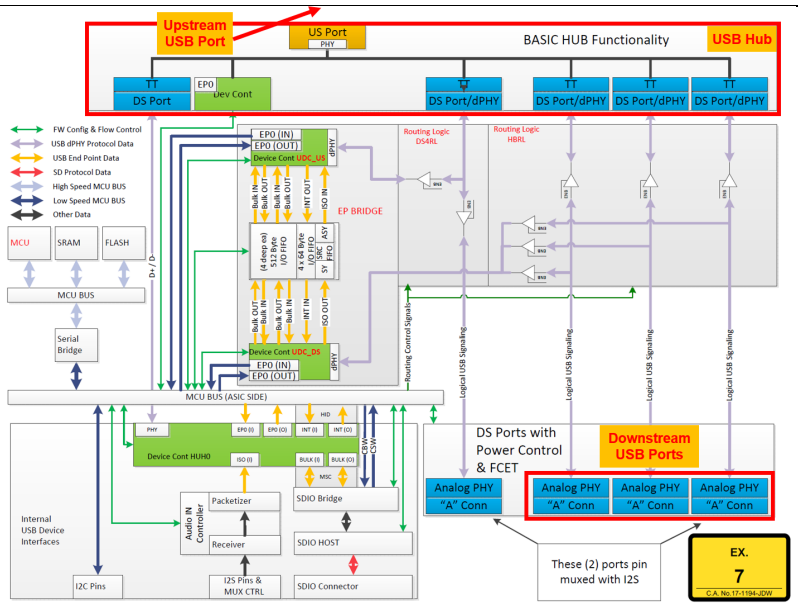 (EX2024 (Annotated).)
1[D]: "said USB hub configured to broadcast data from the upstream USB port to each downstream USB port and to transmit data from each downstream USB port to the upstream USB port;"	The Boston 2 chip in Aptiv's dual role hub contains a USB hub configured to broadcast data from the upstream USB port to each downstream USB port and to transmit data from each downstream USB port to the upstream USB port, as shown in the documentation below:

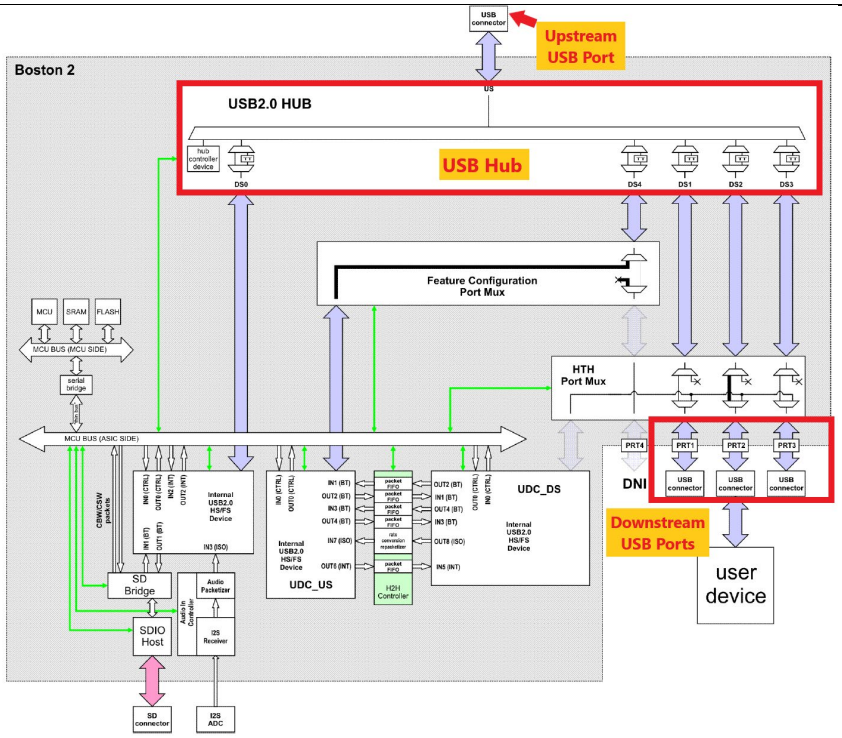

(EX2023, Fig. 7-35(a) (Annotated).)

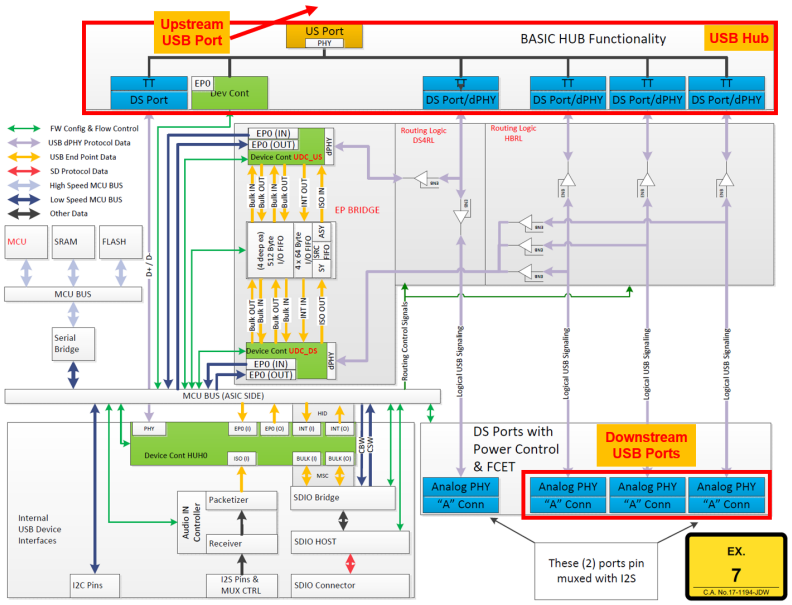

(EX2024 (Annotated).)

The ability to broadcast data from an upstream port to each downstream USB port and to transmit data from each

	downstream port to an upstream port is fundamental to USB hubs. As explained in Chapter 11 of the USB 2.0 specification, "[i]n the downstream direction, hubs operate in a broadcast mode. When a hub detects the start of a packet on its upstream facing port, it establishes connectivity to all enabled downstream facing ports." (EX1018, 11.1.2.1). Similarly, the specification teaches that "[i]f a downstream facing port is enabled . . . and the hub detects the start of a packet on that port, connectivity is established in an upstream direction to the upstream facing port of that hub . . . ." *Id.* Together these passages describe the basic functionality of a USB hub—broadcasting data from an upstream port to all enabled downstream ports and passing data from each downstream port to the upstream port.
1[E]: "a USB bridge interconnected to the USB hub and configured to connect the upstream USB port to a USB host; and"	The Boston 2 chip in Aptiv's dual role hub contains a USB bridge interconnected to the USB hub and configured to connect the upstream USB port to a USB host, as shown in the documentation below: 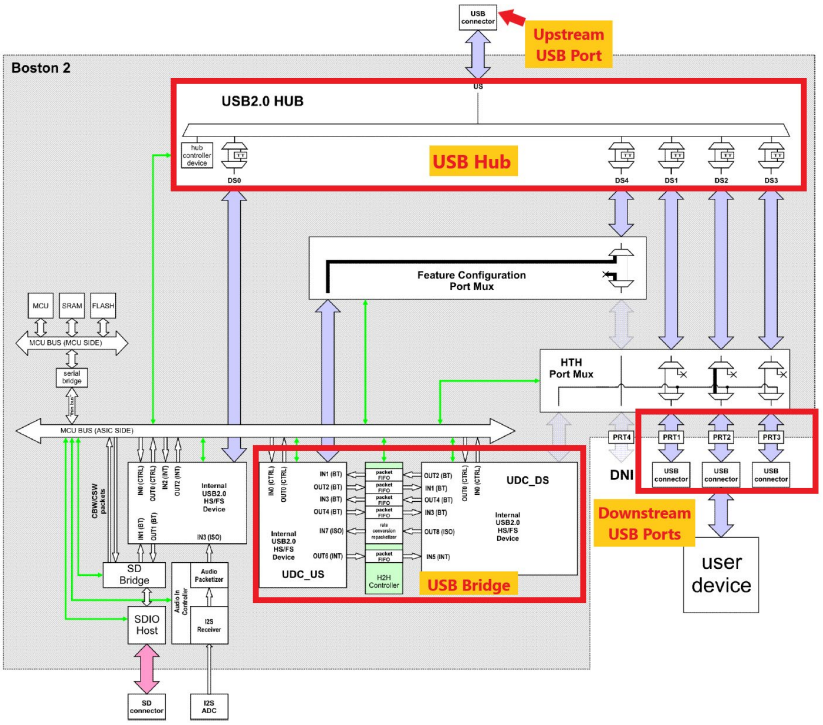

	(EX2023, Fig. 7-35(a) (Annotated). 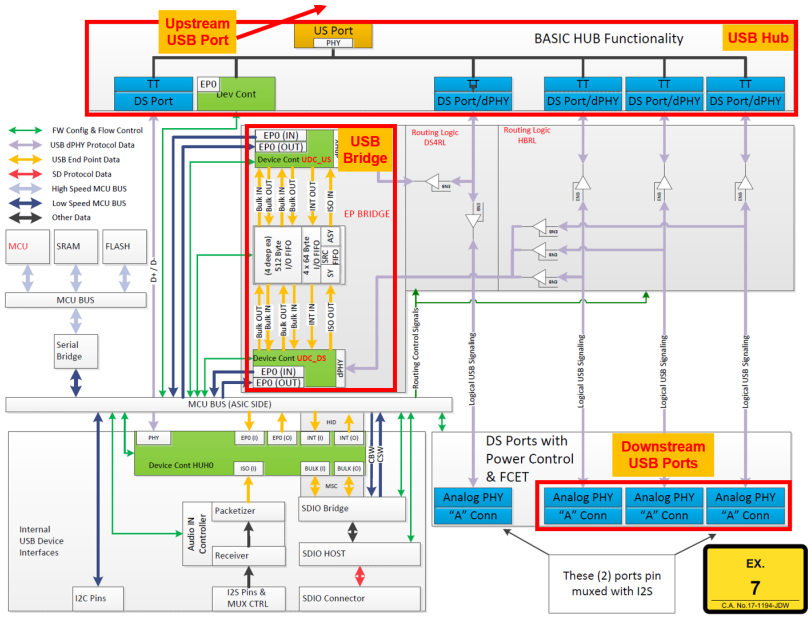 (EX2024 (Annotated).)
1[F]: "a USB routing switch interconnected to the USB bridge, the USB hub, and the plurality of downstream USB ports"	The Boston 2 chip in Aptiv's dual role hub contains a USB routing switch interconnected to the USB bridge, the USB hub, and the plurality of downstream USB ports, as shown in the documentation below:

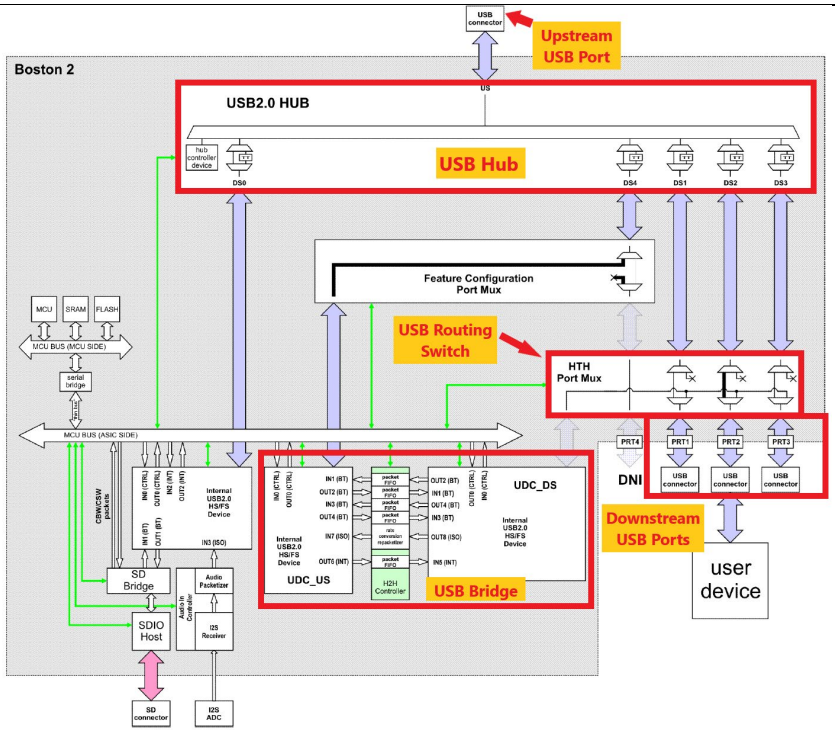

(EX2023, Fig. 7-35(a) (Annotated).)

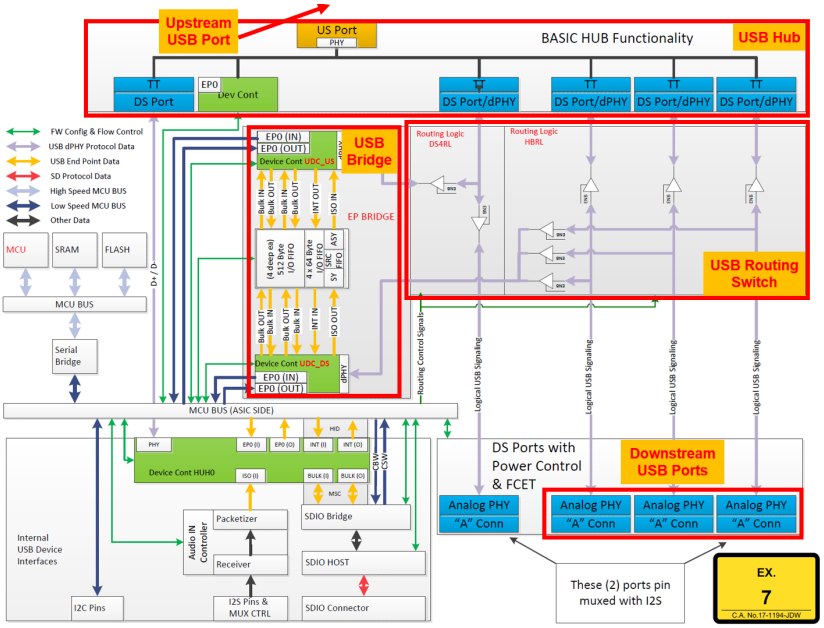

(EX2024 (Annotated).)

1[G]: "wherein the USB routing switch is configured to connect a first downstream USB port of the plurality of downstream USB ports to the upstream USB port through the USB bridge when a consumer device connected to the first downstream USB port is the USB host and is configured to initiate bidirectional communication with the upstream USB port, and"	The USB routing switch found in the Boston 2 chip in Aptiv's dual role hub is configured to connect a first downstream USB port to the upstream USB port through the USB bridge when a consumer device connected to the first downstream USB port is the USB host and is configured to initiate bidirectional communication with the upstream USB port. One of the fundamental functions of a USB host is its ability initiate communication with other devices in the USB network. This stands in contrast with a USB device, which can only respond to communications from a USB host and cannot initiate communication. As explained in the USB 2.0 specification, "[t]he USB is a polled bus. The Host Controller initiates all data transfers." (EX1018 at 4.4.). I therefore understand the claim's reference to "initiat[ing] bidirectional communication with the upstream USB port" to require that both the upstream host and downstream host be configured to operate as USB hosts capable of initiating communication. The routing switch in the Boston 2 chip in Aptiv's dual role hub is configured to connect a consumer device operating in USB host mode through the USB bridge to the upstream USB port, as shown by the documentation below:

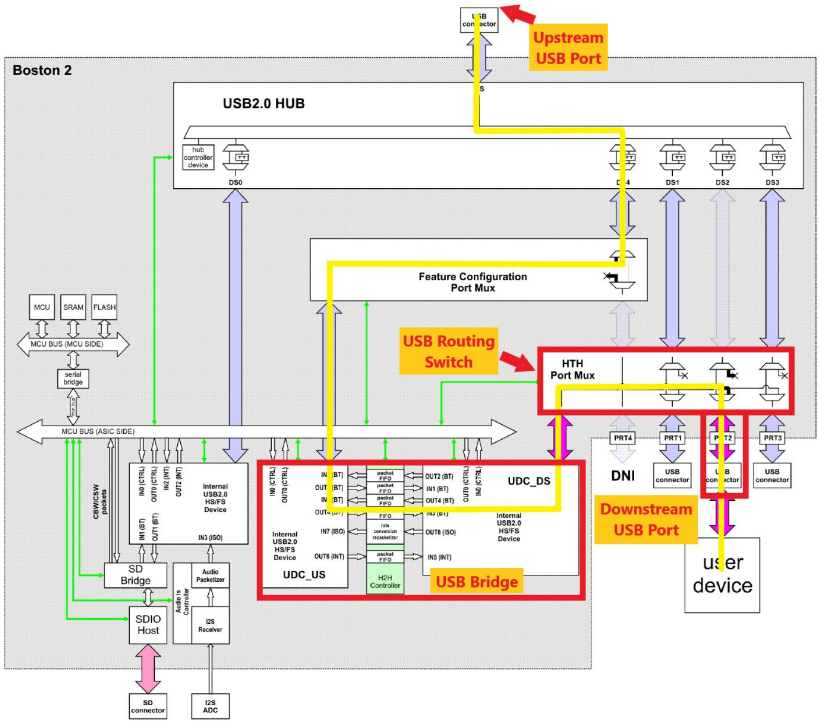

(EX2023, Fig. 7-37(c) (Annotated).)

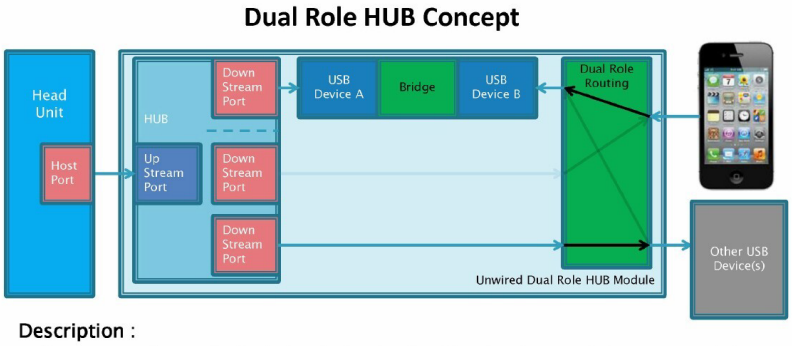

Description :

- Upon connection to Apple device the head unit will authenticate and then command the Bridge driver to role reverse resulting in the Apple device to be routed to the Bridge
  - Module contains a single Bridge
  - Either user accessible port may be role reversed and connected to the bridge
- When the iOS device is in host mode it will transfer data to Device B and Device B will transfer it to Device A.
- The Bridge driver in the head unit will read the data from endpoints in device A and pass it to a gadget driver

(EX2022, 12.)

	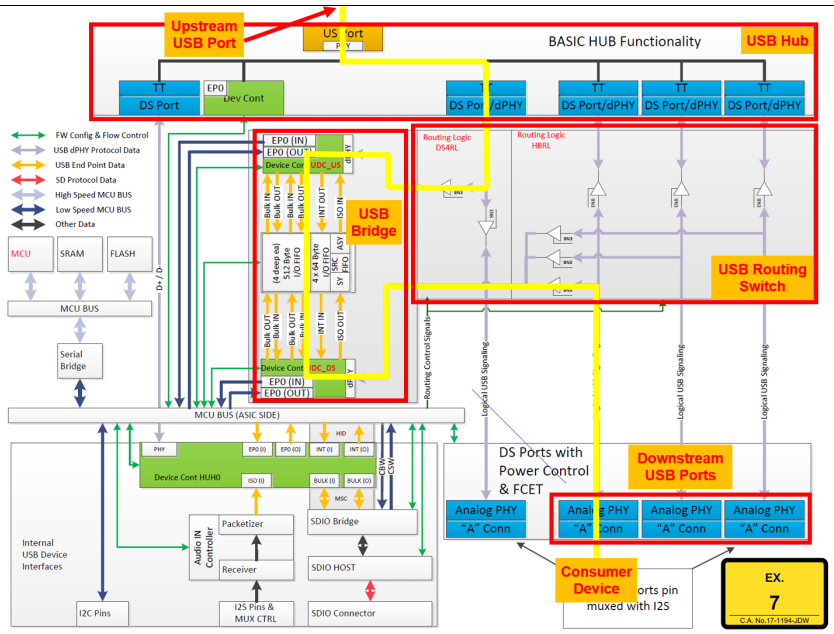 (EX2024 (Annotated).)
1[H]: "wherein the USB routing switch is configured to connect the first downstream USB port directly to the USB hub when the consumer device connected to the first downstream USB port is configured to only respond to communication from the upstream USB port, thereby rendering the consumer device compatible with a device connected to the upstream USB port."	The USB routing switch found in the Boston 2 chip contained in Aptiv's dual role hub is configured to connect the first downstream USB port directly to the USB hub when the consumer device connected to the first downstream USB port is configured to only respond to communication from the upstream USB port, thereby rendering the consumer device compatible with a device connected to the upstream USB port, as shown in the documentation below:

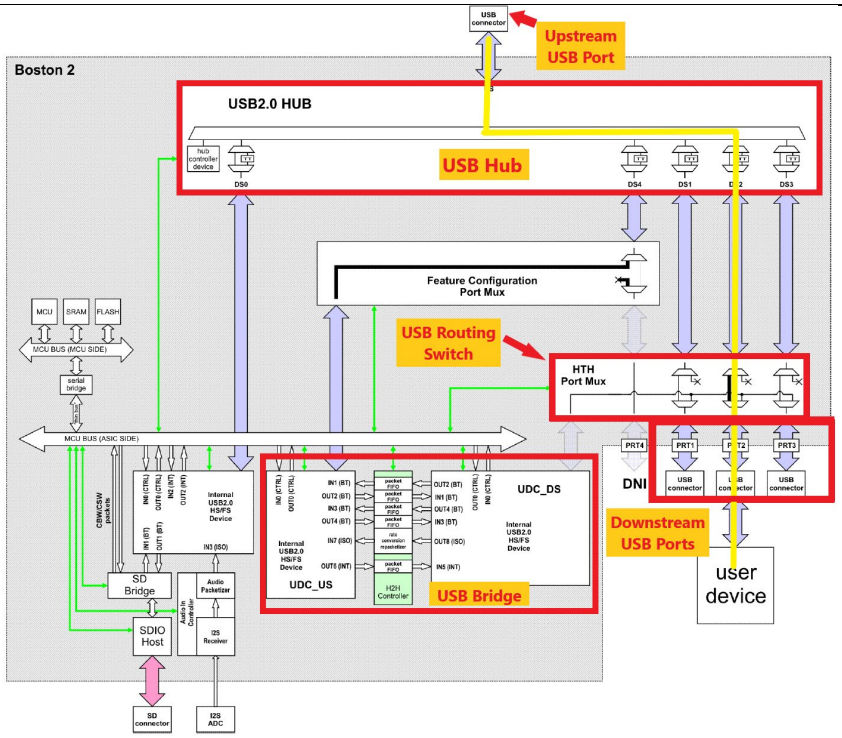

(EX2023, Fig. 7-35(a) (Annotated).)

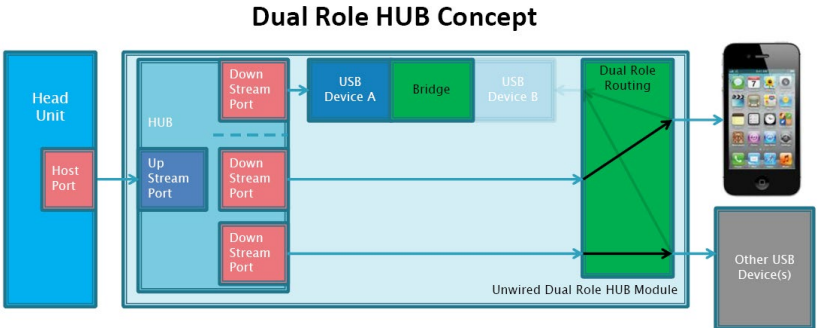

(EX2022, 11.)

	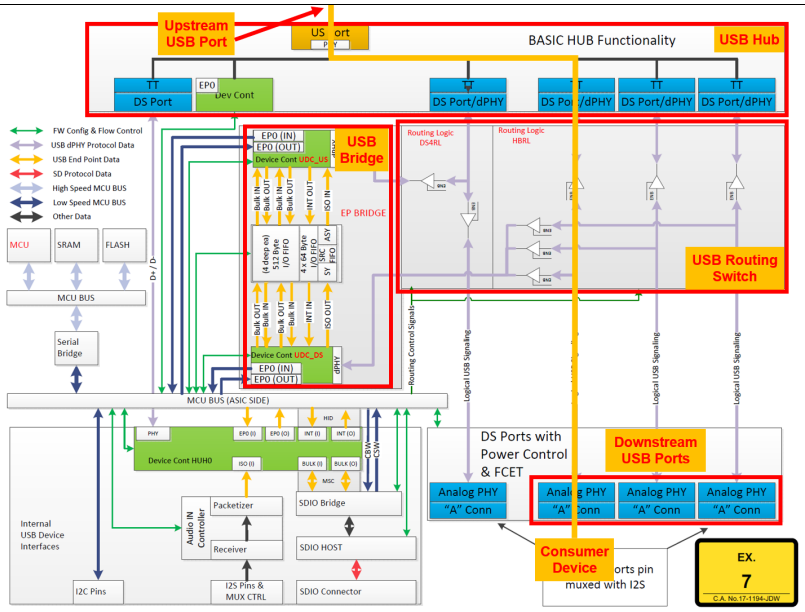 As I previously discussed, one of the fundamental characteristics of a USB device is that it is configured to respond to communication initiated by the USB host and does not itself initiate communication. (EX1018 at 4.4.). Accordingly, I understand this claim limitation to require that the connected consumer device is connected to the USB hub as a USB device, rather than as a USB host.
2[P]: "The USB hub module according to claim 1"	As addressed previously, the Boston 2 chip contained in Aptiv's dual role hub contains a USB hub module that embodies all limitations of claim 1.
2[A]: "wherein the USB routing switch is configured to connect the first downstream USB port to the USB hub through the USB bridge when a first consumer device connected to the first downstream USB port is acting	The USB routing switch found in the Boston 2 chip contained in Aptiv's dual role hub is configured to connect the first downstream USB port to the USB hub through the USB bridge when a first consumer device connected to the first downstream USB port is acting as the USB host, as shown in the documentation below:

as the USB host, and”	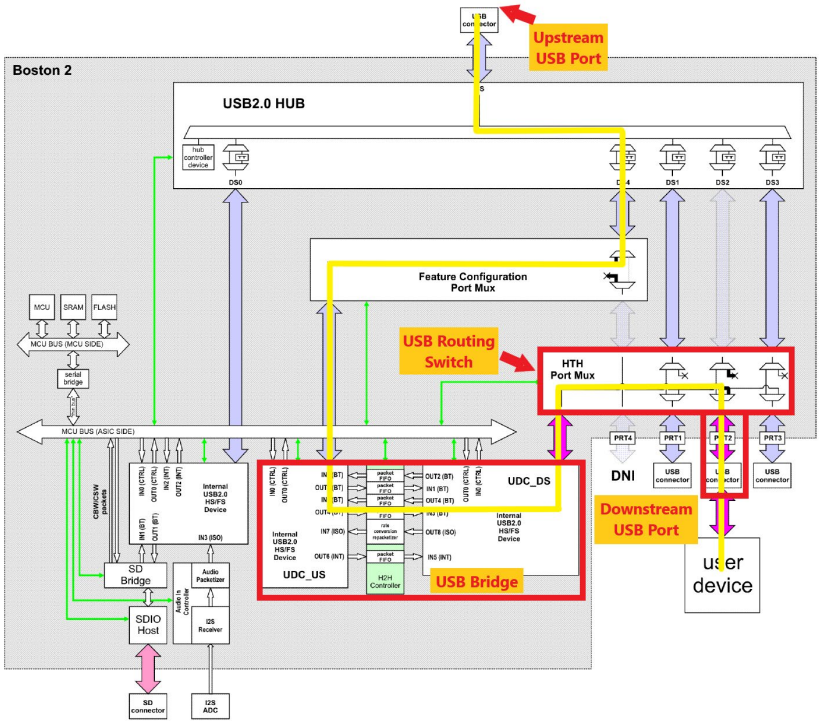 (EX2023, Fig. 7-37(c) (Annotated).) 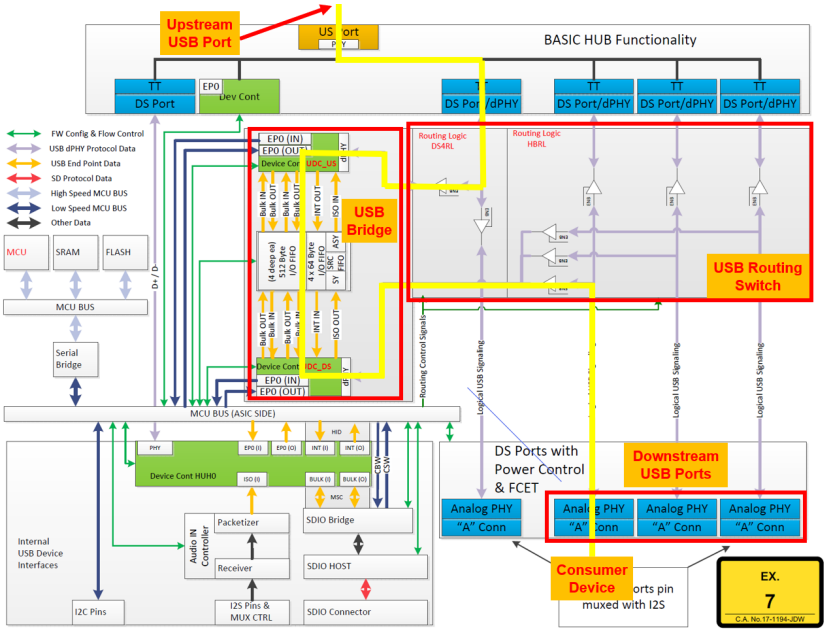 (EX2024 (Annotated).)

2[B]: "wherein the USB routing switch is configured to simultaneously connect a second downstream USB port of the plurality of downstream USB ports directly to the USB hub when a second consumer device connected to the second downstream USB port is acting as a USB device,"	The USB routing switch found in the Boston 2 chip contained in Aptiv's dual role hub is configured to simultaneously connect a second downstream USB port directly to the USB hub when a second consumer device connected to the second downstream USB port is acting as a USB device, as shown in the documentation below: 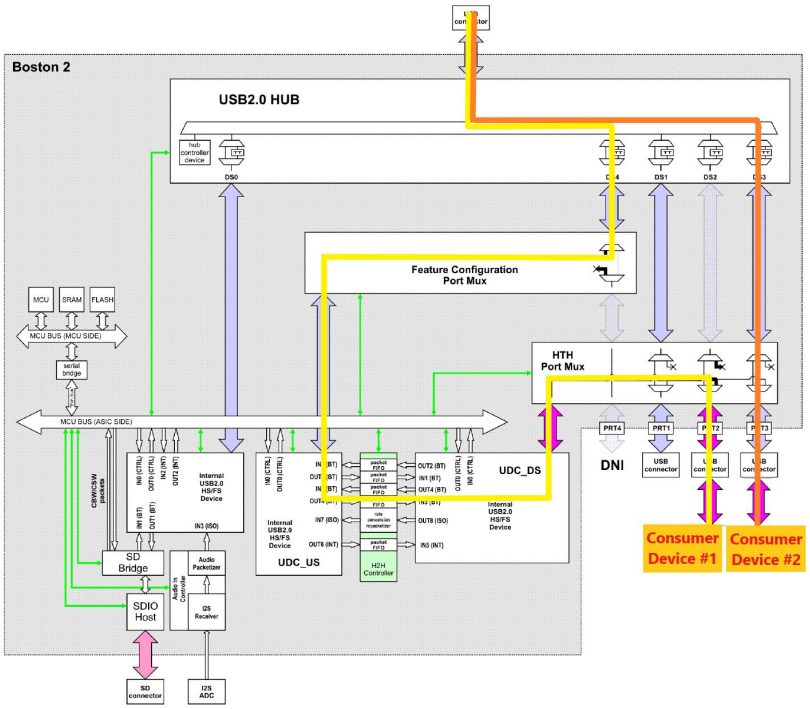 (EX2023, Fig. 7-37(c) (Annotated).)

	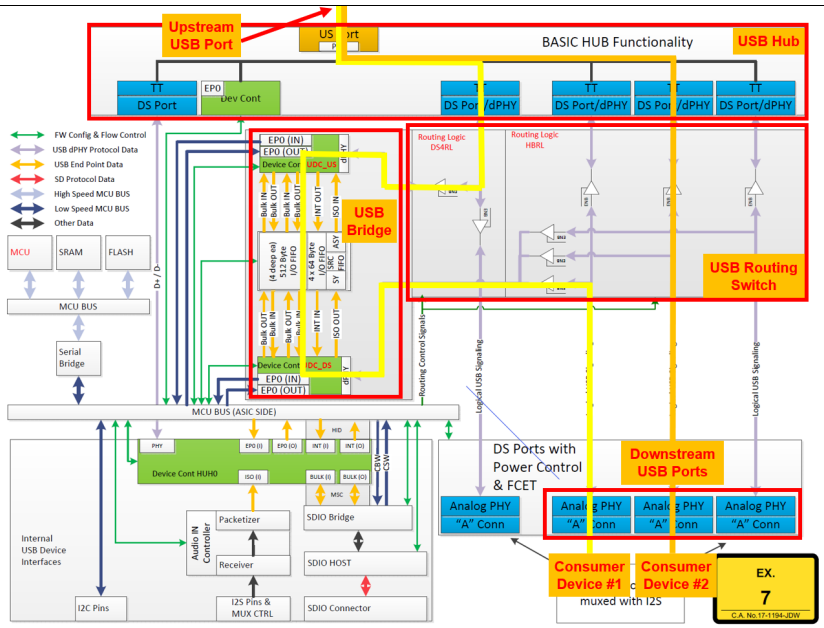 (EX2024 (Annotated).)
2[C]: "thereby rendering the first and second consumer devices compatible to communicate simultaneously with the upstream USB port."	The USB routing switch found in the Boston 2 chip contained in Aptiv's dual role hub renders the first and second consumer devices compatible to communicate simultaneously with the upstream USB port, as shown in the documentation below:

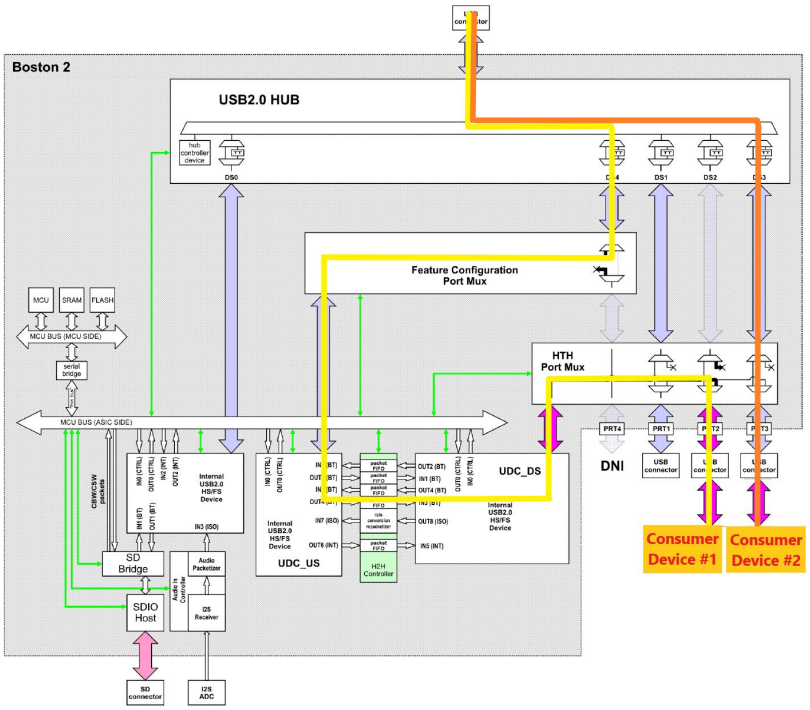

(EX2023, Fig. 7-37(c) (Annotated).)

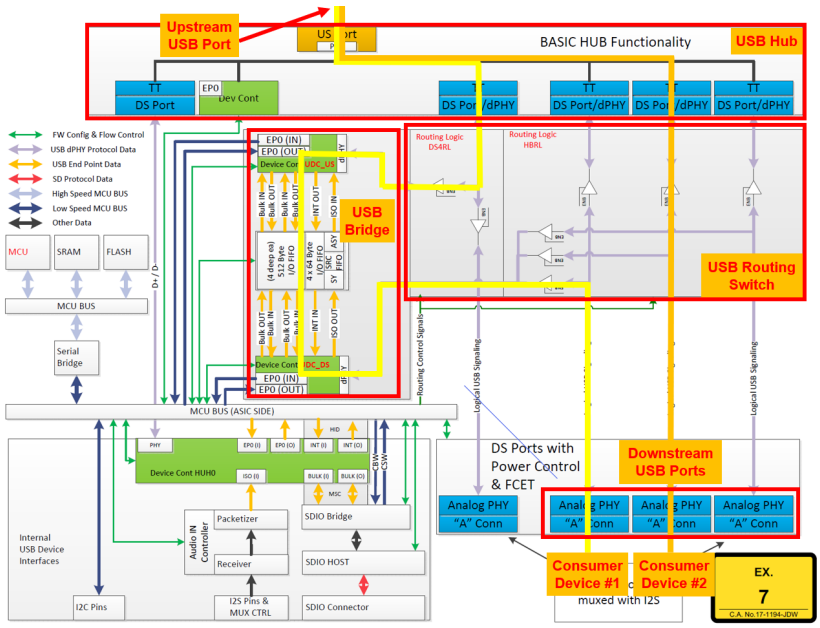

(EX2024 (Annotated).)

How do we support CarPlay™ in Hubs and Media Modules?

- What differentiates us is our own ASIC to support Apple CarPlay™ – which recently won the PACE award!
- This chip is designed for multi-port architecture with CarPlay™ support through unique Host-to-Host bridging technology.
- A fully functional system of downstream ports is enabled with a single USB connection to head unit
- Any of downstream ports may host CarPlay™.
- While one of the ports is occupied with Apple CarPlay™ session, the rest of ports in the system stay active and may exchange data.
- No need for USB MUX switches that can cause USB eye diagram degradation.
- Our ASIC is in production with 3 OEMs currently, with 1 more OEMs planned for later this year.

Automotive News PACE AWARD 2016 WINNER

DELPHI

(EX2027, 11 (Annotated).)

Multiple USB Connections

- Does not requires OTG port on Head Unit → no hardware change to Head Unit
- When one of the ports is used for CarPlay™, the other ports ARE ABLE to transfer data to the Head Unit!
- Robust USB signal integrity

(EX2037, 21.)

Key System Considerations	Two USB Paths	Port Reversal Hub	Delphi Dual Role Hub
Head Unit used "Host" port (OTG not required)	No	No	Yes
CarPlay™ available on any USB port	No	Yes	Yes
Other hub ports work during CarPlay™	Yes	No	Yes

(EX2037, 22.)

156. In essence, claim 2 of the '962 Patent is directed to the ability to simultaneously connect a consumer device acting as a USB host to the USB hub through the USB bridge and connect a second consumer device acting as a USB device directly to the USB hub without the need for reconnection, re-enumeration, or otherwise disrupting either device's ability to communicate with the upstream

host. This is the core concept behind the functionality described by automakers and suppliers as "persistent downstream USB."

ii. '962 Patent, Claim 15

157. Claim 15 of the '962 Patent is directed to "The integrated circuit according to claim 14, wherein the USB routing switch is configured to connect the first downstream USB port to the USB hub through the USB bridge when a first consumer device connected to the first downstream USB port is acting as the USB host, and wherein the USB routing switch is configured to simultaneously connect a second downstream USB port of the plurality of downstream USB ports directly to the USB hub when a second consumer device connected to the second downstream USB port is acting as a USB device, thereby rendering the first and second consumer devices compatible to communicate simultaneously with the upstream USB port."

158. This claim directly addresses the functionality that drove customer demand, commercial success, and industry praise and that frustrated others in the field. In particular, it is directed to the ability to "simultaneously connect" two consumer devices—one acting as a USB host and one acting as a USB device—to a USB hub and thereby allow both devices to simultaneously have a data connection with an upstream USB port—that is, persistent downstream USB connectivity.

159. In the chart below, I provide an analysis of how Aptiv's dual role hub embodies each limitation of Claim 15 of the '962 Patent:

Challenged Claim	Aptiv Dual Role Hub
14[P]: "An integrated circuit, comprising:"	To the extent the preamble is limiting, Aptiv's dual role hub contains an integrated circuit, the Boston 2 chip. The Boston 2 chip is an Application Specific Integrated Circuit ("ASIC"), as shown in the documentation below: **Boston USB Hub with SD Card Port ASIC** AyDeeKay **Boston USB Hub with SD Card Port ASIC** Product Specification (EX2023, 1.

14[A]: "a USB hub configured to be interconnected to an upstream USB port and a plurality of downstream USB ports"	Aptiv's Boston 2 chip contains a USB hub that is configured to be interconnected to an upstream USB port and a plurality of downstream USB ports, as shown in the documentation below: 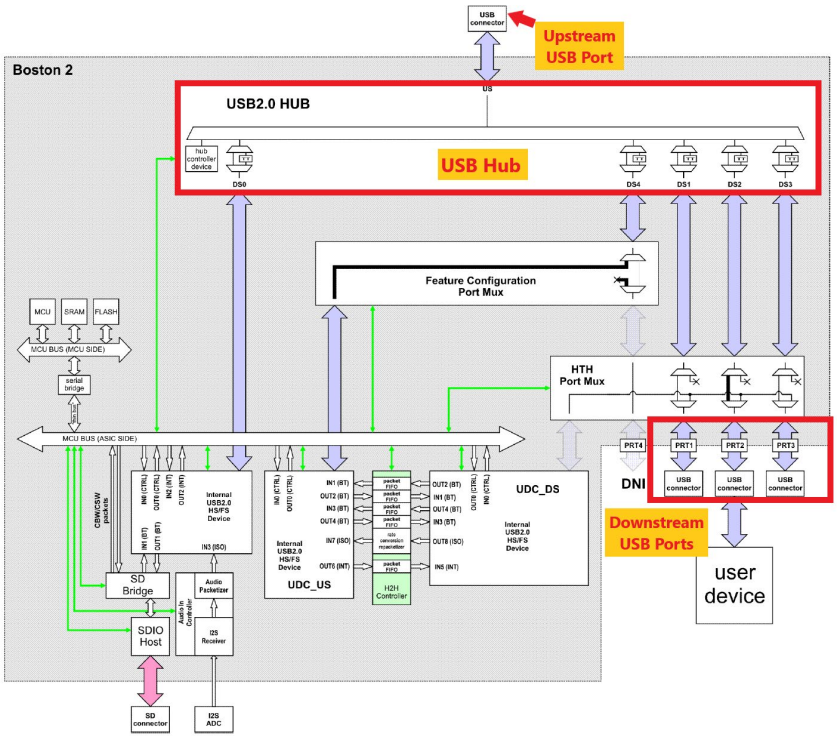 (EX2023, Fig. 7-35(a) (Annotated).

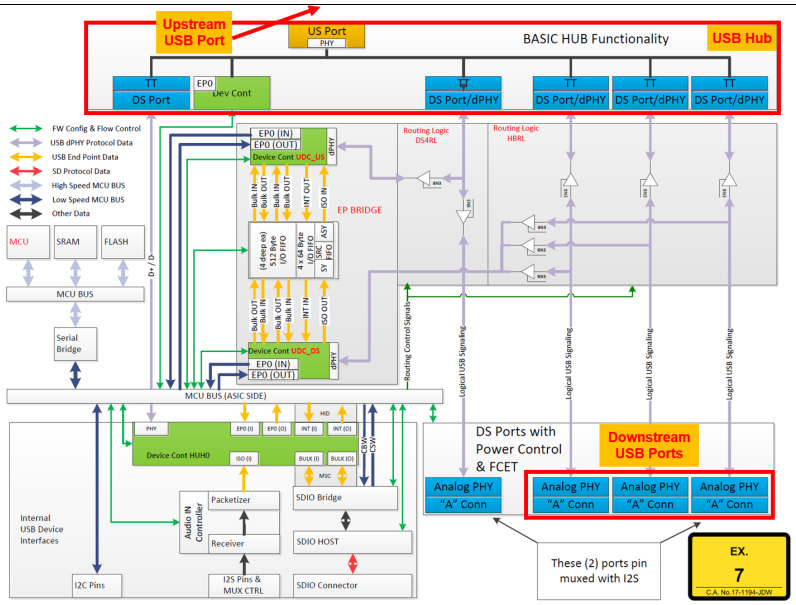

(EX2024 (Annotated).

14[B]: "said USB hub configured to broadcast data from the upstream USB port to each downstream USB port and to transmit data from each downstream USB port to the upstream USB port;"	Aptiv's Boston 2 chip contains a USB hub that is configured to broadcast data from the upstream USB port to each downstream USB port and to transmit data from each downstream USB port to the upstream USB port, as shown in the documentation below: 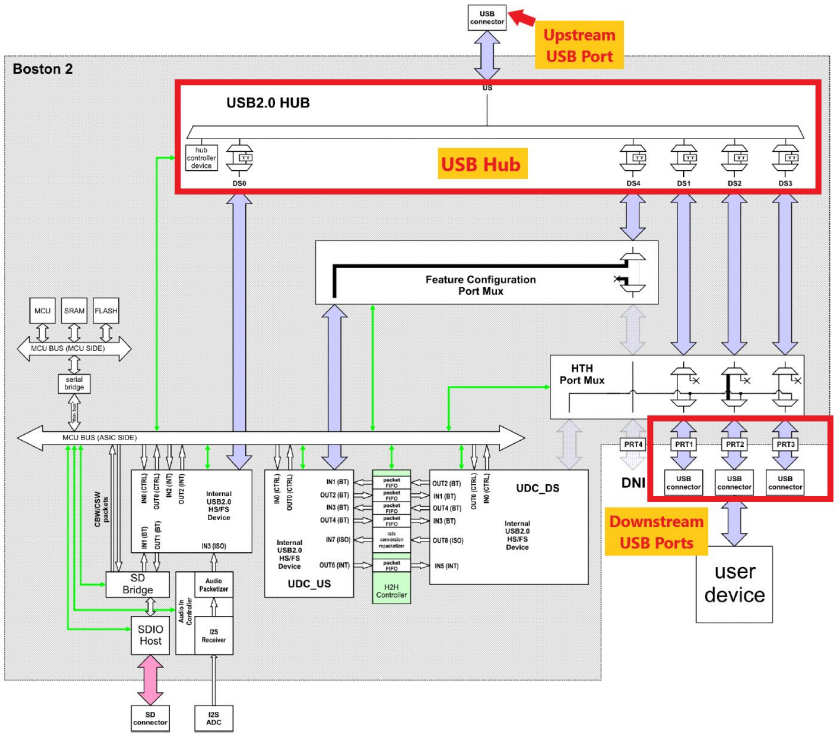 (EX2023, Fig. 7-35(a) (Annotated).

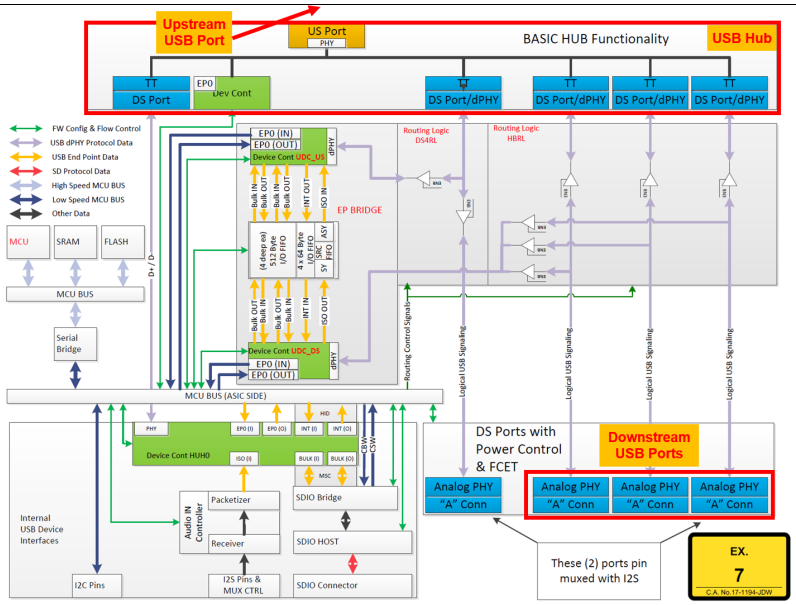

(EX2024 (Annotated).

The ability to broadcast data from an upstream port to each downstream USB port and to transmit data from each downstream port to an upstream port is fundamental to USB hubs. As explained in Chapter 11 of the USB 2.0 specification, "[i]n the downstream direction, hubs operate in a broadcast mode. When a hub detects the start of a packet on its upstream facing port, it establishes connectivity to all enabled downstream facing ports." (EX1018, 11.1.2.1). Similarly, the specification teaches that "[i]f a downstream facing port is enabled . . . and the hub detects the start of a packet on that port, connectivity is established in an upstream direction to the upstream facing port of that hub . . . ." *Id.* Together these passages describe the basic functionality of a USB hub—broadcasting data from an upstream port to all enabled downstream ports and passing data from each downstream port to the upstream port.

14[C]: "a USB bridge interconnected to the USB hub and configured to connect the upstream USB port to a USB host; and"	Aptiv's Boston 2 chip contains a USB bridge interconnected to the previously mentioned USB hub and configured to connect the upstream USB port to a USB host, as shown in the documentation below: 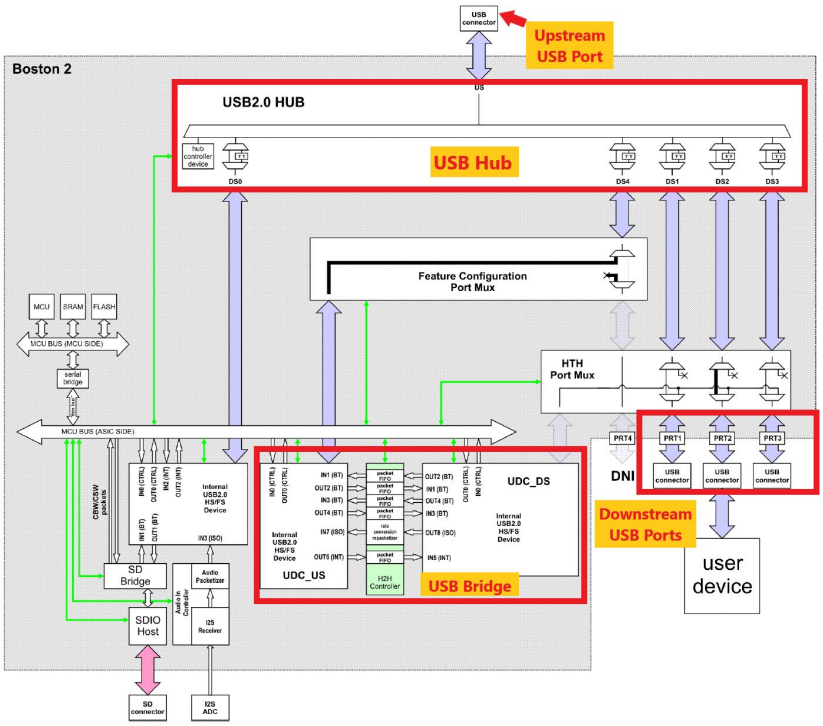 (EX2023, Fig. 7-35(a) (Annotated).

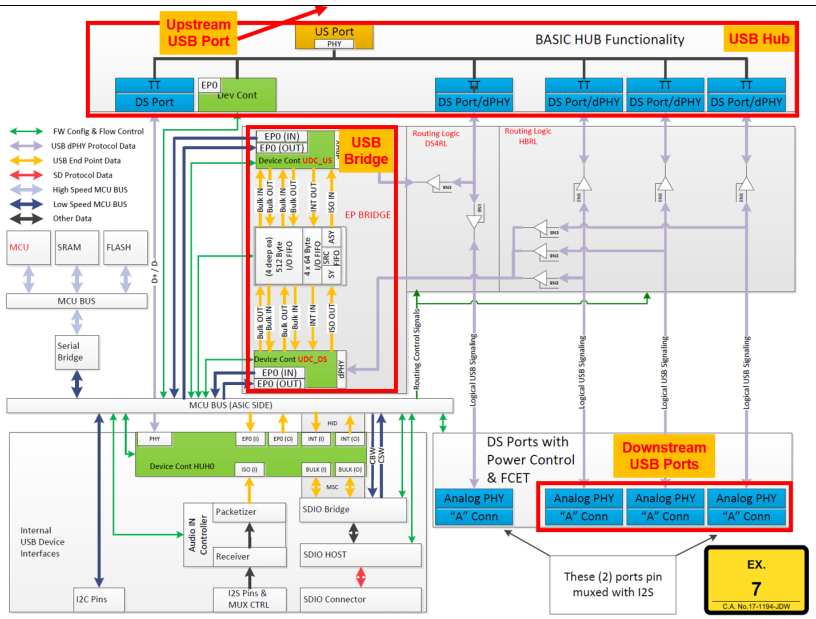

(EX2024 (Annotated).

14[D]: "a USB routing switch interconnected to the USB bridge, the USB hub, and the plurality of downstream USB ports"	The Boston 2 chip in Aptiv's dual role hub contains a USB routing switch interconnected to the previously mentioned USB bridge, USB hub, and to the plurality of downstream USB ports, as shown in the documentation below: 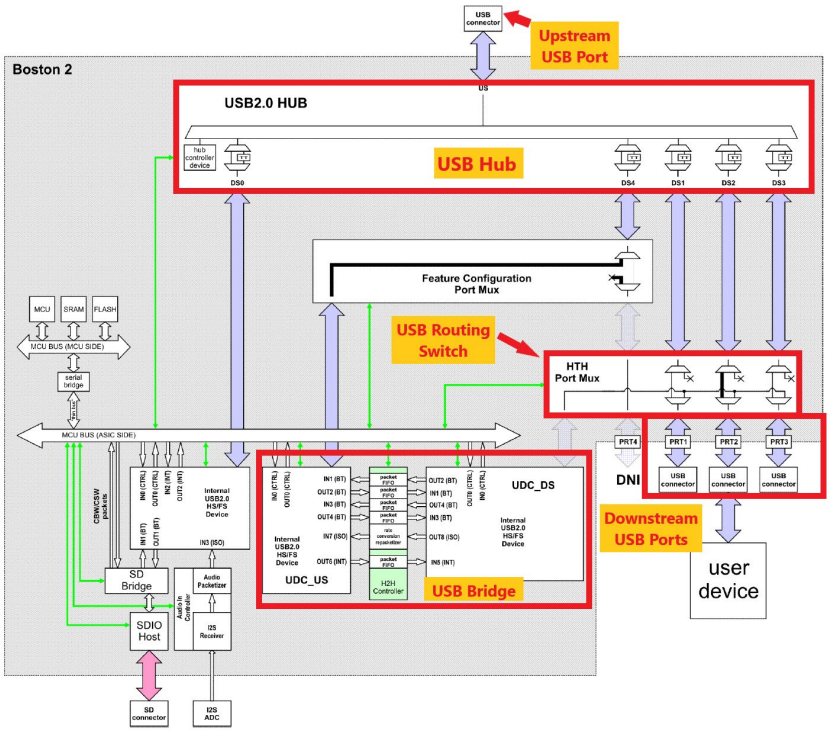 (EX2023, Fig. 7-35(a) (Annotated).

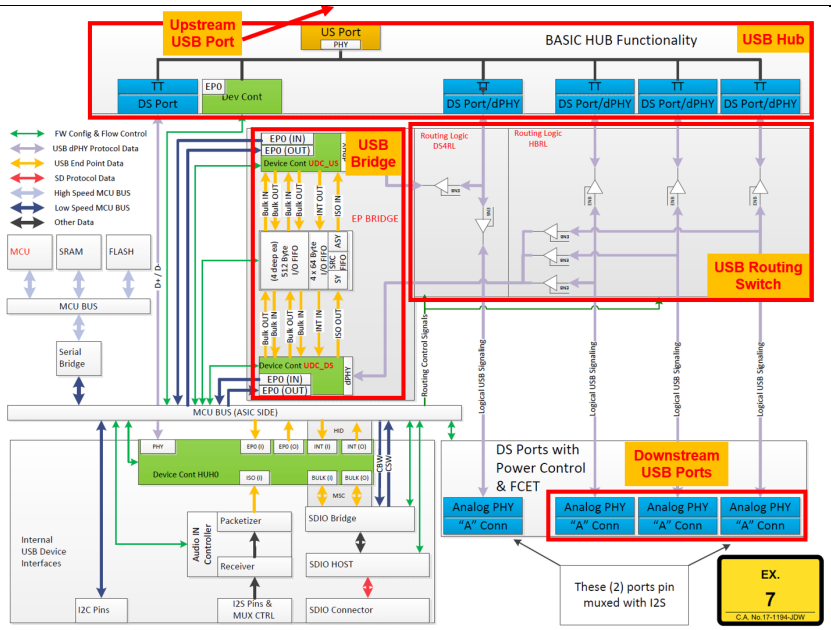

(EX2024 (Annotated).

14[E]: "wherein the USB routing switch is configured to connect a first downstream USB port of the plurality of downstream USB ports to the upstream USB port through the USB bridge when a consumer device connected to the first downstream USB port is the USB host and is configured to initiate bidirectional communication with the upstream USB port, and"	The routing switch in the Boston 2 chip in Aptiv's dual role hub is configured to connect a first downstream USB port to the upstream USB port through the USB bridge when a consumer device connected to the downstream USB port is the USB host and is configured to initiate bidirectional communication with the upstream USB port. One of the fundamental functions of a USB host is its ability initiate communication with other devices in the USB network. This stands in contrast with a USB device, which can only respond to communications from a USB host and cannot initiate communication. As explained in the USB 2.0 specification, "[t]he USB is a polled bus. The Host Controller initiates all data transfers." (EX1018 at 4.4.). I therefore understand the claim's reference to "initiat[ing] bidirectional communication with the upstream USB port" to require that both the upstream host and downstream host be configured to operate as USB hosts capable of initiating communication. The routing switch in the Boston 2 chip in Aptiv's dual role hub is configured to connect a consumer device operating in USB host mode through the USB bridge to the upstream USB port, as shown by the documentation below:

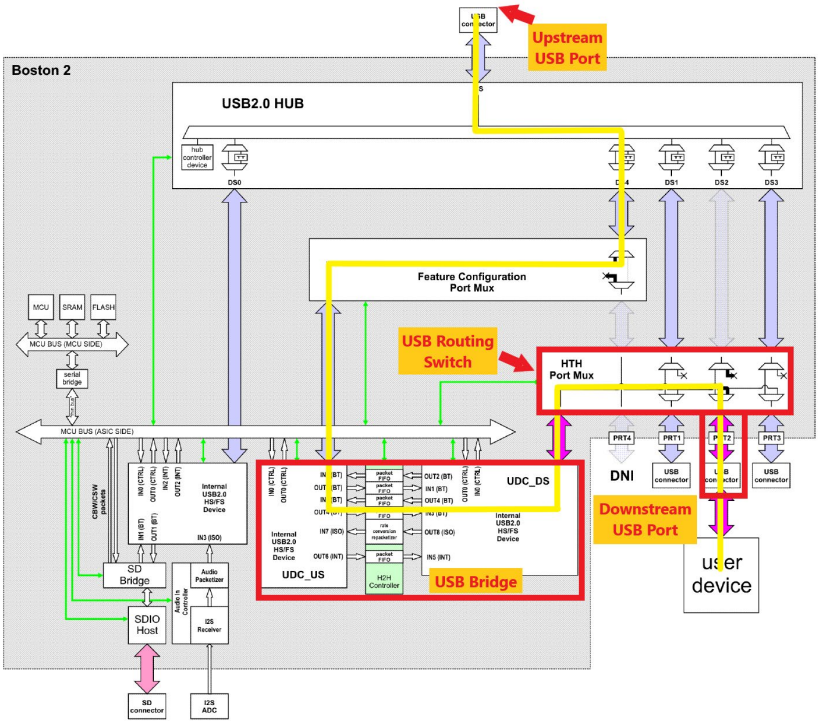

(EX2023, Fig. 7-37(c) (Annotated).

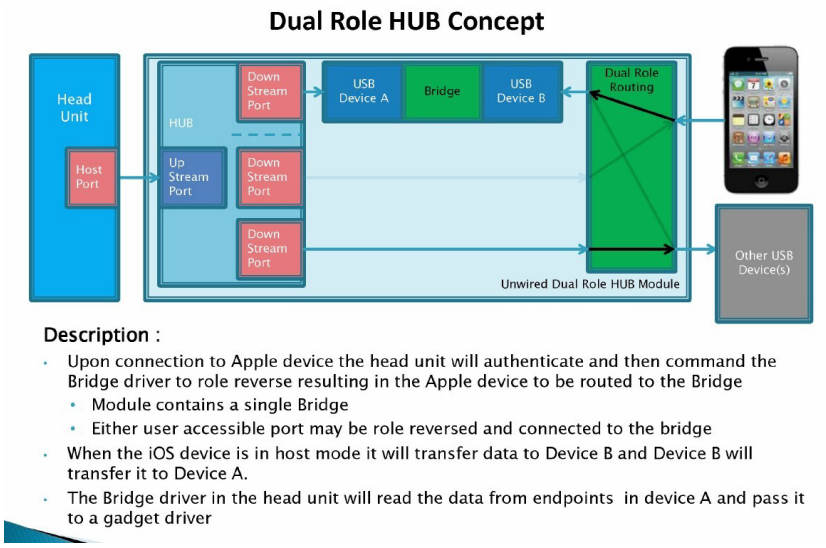

(EX2022, 12.

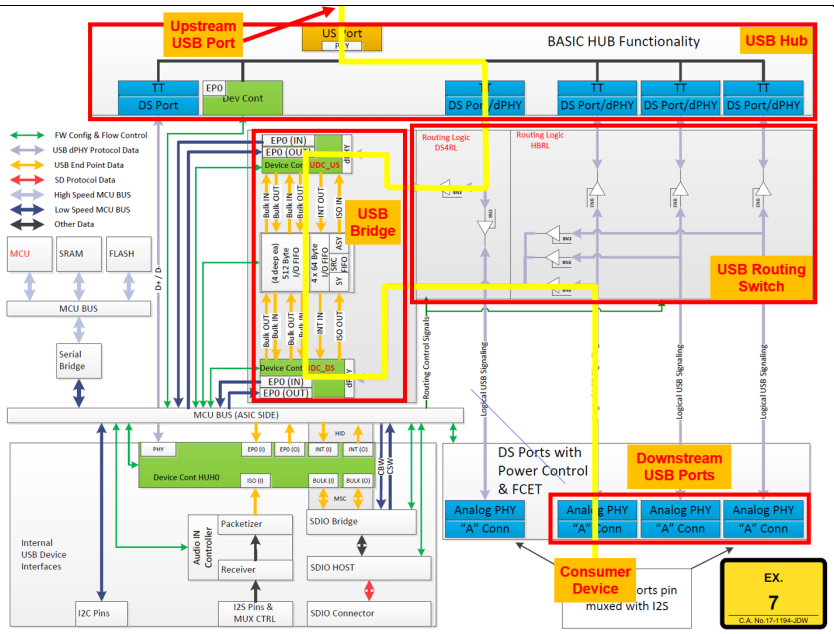

(EX2024 (Annotated).

14[F]: "wherein the USB routing switch is configured to connect the first downstream USB port directly to the USB hub when the consumer device connected to the first downstream USB port is configured to only respond to communication from the upstream USB port, thereby rendering the consumer device compatible with a device connected to the upstream USB port."	The routing switch in the Boston 2 chip in Aptiv's dual role hub is configured to connect a first downstream USB port directly to the USB hub when the consumer device connected to the first downstream USB port is configured to only respond to communication from the upstream USB port, thereby rending the consumer device compatible with a device connected to the upstream USB port, as shown in the documentation below: 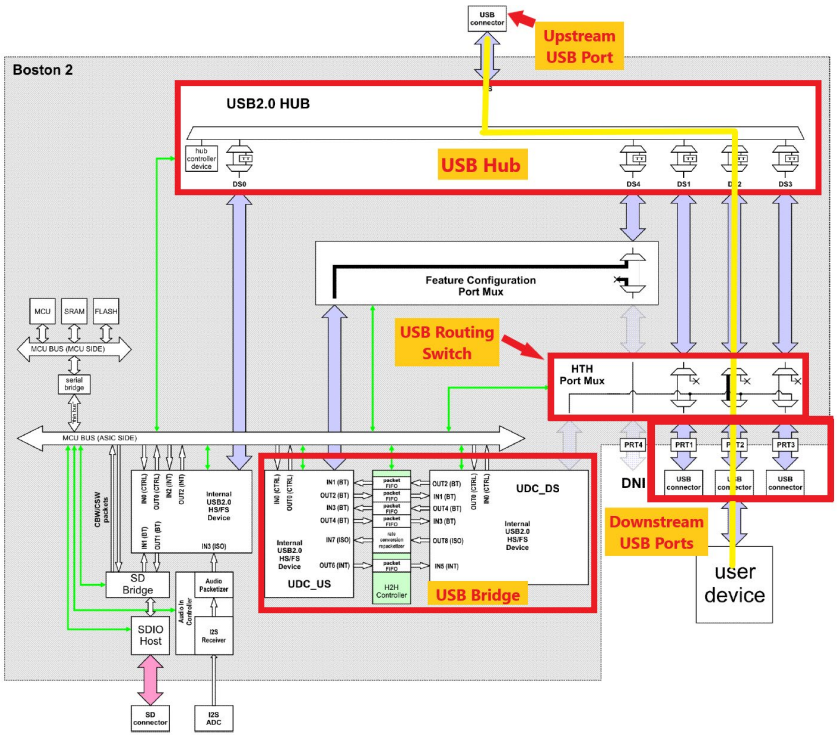 (EX2023, Fig. 7-35(a) (Annotated).

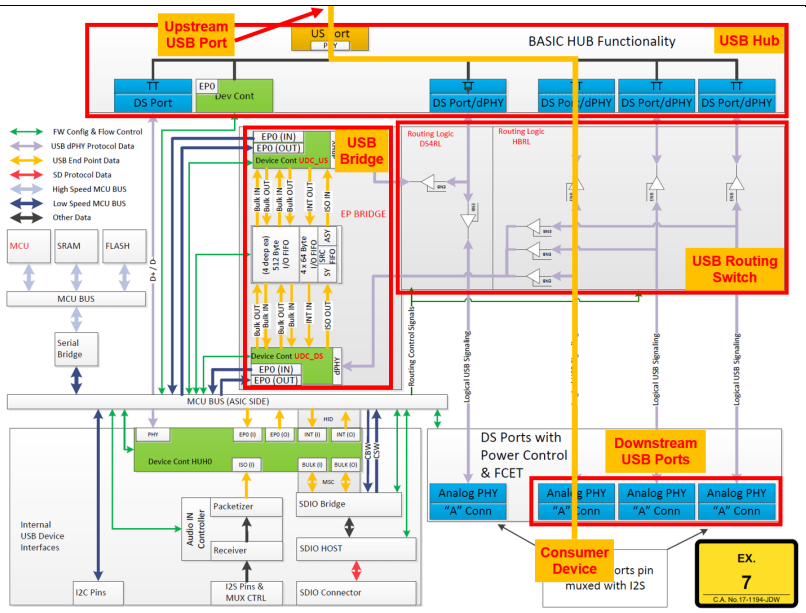

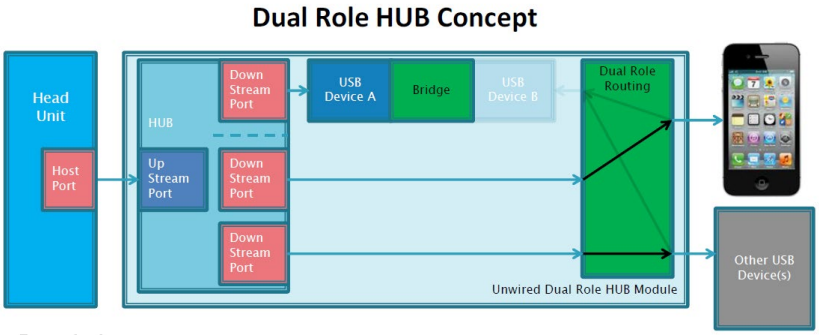

(EX2022, 11.

(EX2023, 90-93 (describing the port switch sequence, whereby a consumer device operating in USB device mode is routed around the USB bridge).

As I previously discussed, one of the fundamental characteristics of a USB device is that it is configured to respond to communication initiated by the USB host and does not itself initiate bidirectional communication. (EX1018 at 4.4.). Accordingly, I understand this claim limitation to require that the consumer device is connected as a USB device, rather than as a USB host.

15[P]: "The integrated circuit according to claim 14"	As addressed previously, the Boston 2 chip contained in Aptiv's dual role hub is an integrated circuit and embodies all limitations of claim 14.

15[A]: "wherein the USB routing switch is configured to connect the first downstream USB port to the USB hub through the USB bridge when a first consumer device connected to the first downstream USB port is acting as the USB host, and"	The routing switch in the Boston 2 chip contained in Aptiv's dual role hub is configured to connect the first downstream USB port to the USB hub through the USB bridge when a first consumer device connected to the first downstream USB port is acting as the USB host, as shown in the documentation below: 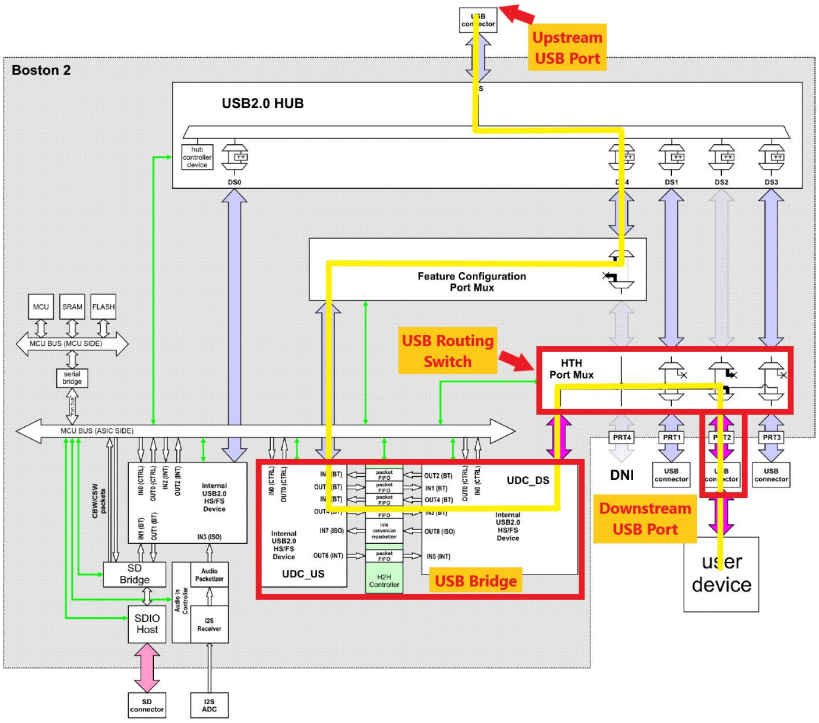 (EX2023, Fig. 7-37(c) (Annotated).

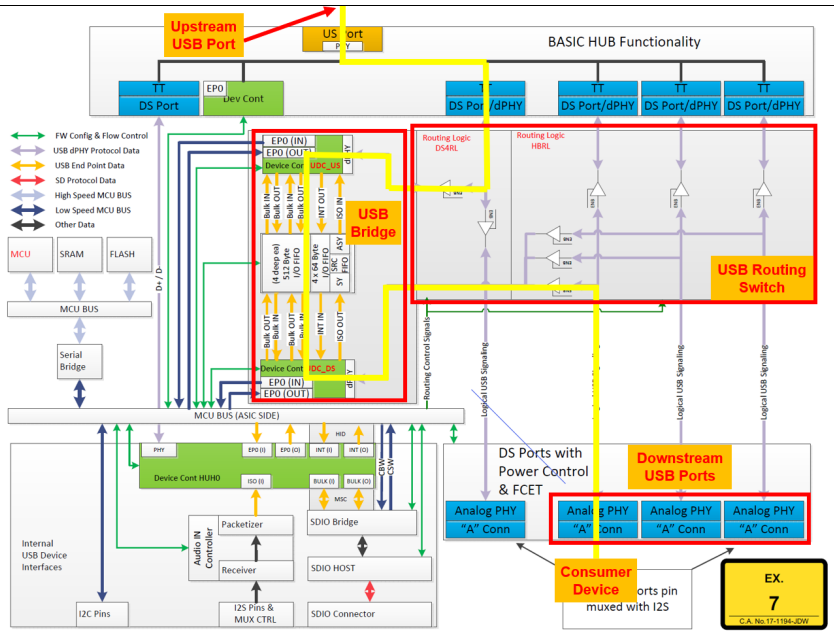

(EX2024 (Annotated).

15[B]: "wherein the USB routing switch is configured to simultaneously connect a second downstream USB port of the plurality of downstream USB ports directly to the USB hub when a second consumer device connected to the second downstream USB port is acting as a USB device,"	The routing switch in the Boston 2 chip contained in Aptiv's dual role hub is configured to simultaneously connect a second downstream USB port of the plurality of downstream USB ports directly to the USB hub when a second consumer device connected to the second downstream USB port is acting as a USB device, as shown in the documentation below: 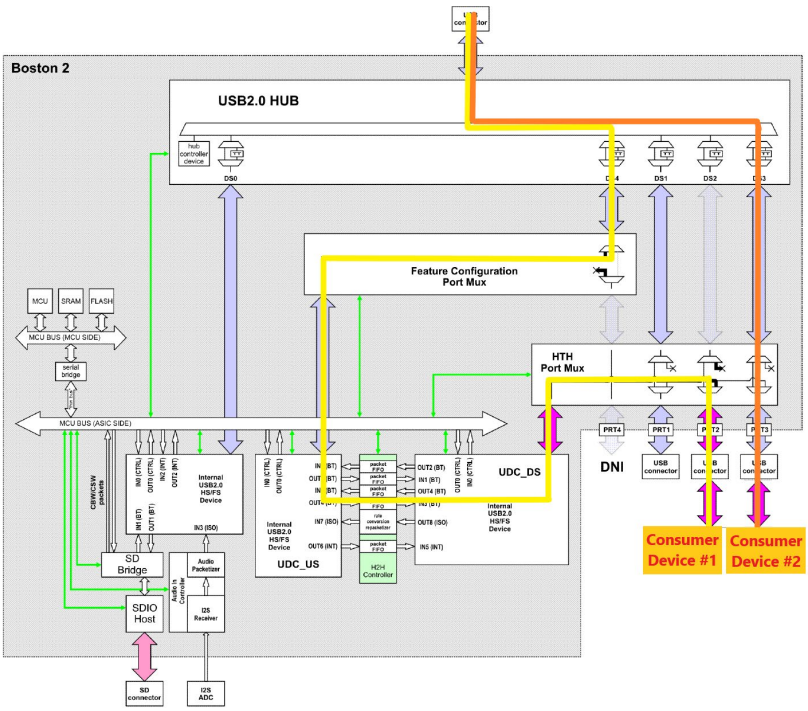 (EX2023, Fig. 7-37(c) (Annotated).

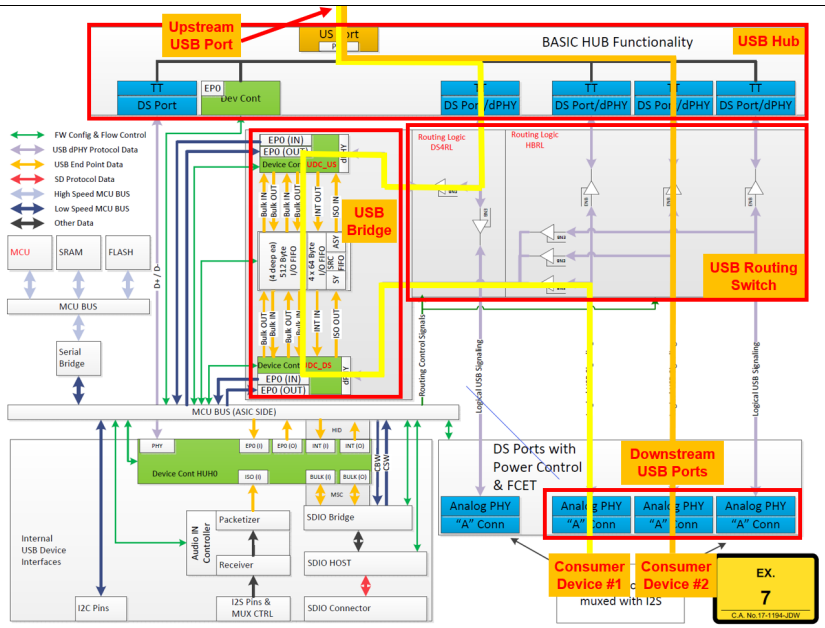

(EX2024 (Annotated).

15[C]: "thereby rendering the first and second consumer devices compatible to communicate simultaneously with the upstream USB port."	The Boston 2 chip contained in Aptiv's dual role hub is configured to permit a first and second consumer device to communicate simultaneously with an upstream USB port, as shown in the documentation below: 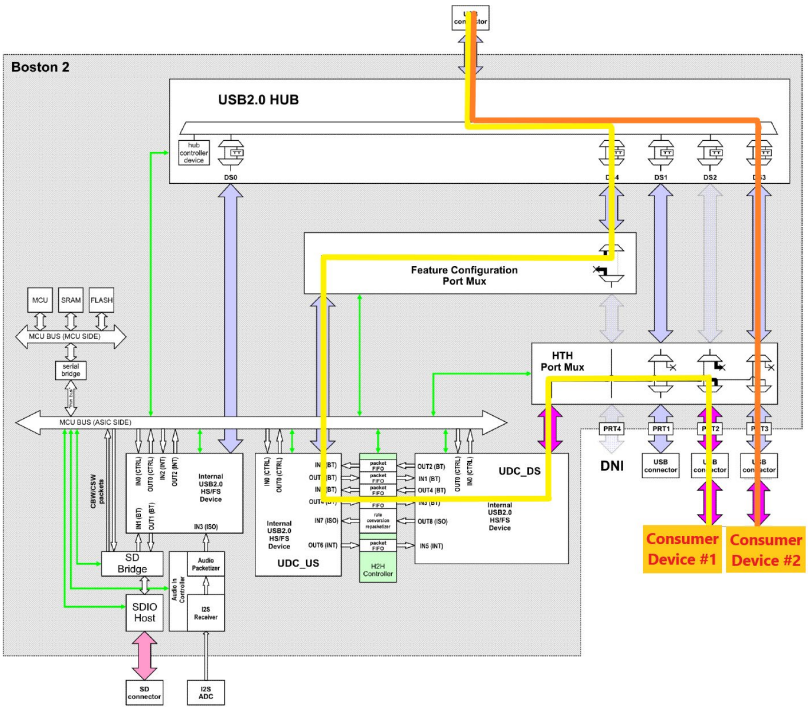 (EX2023, Fig. 7-37(c) (Annotated).

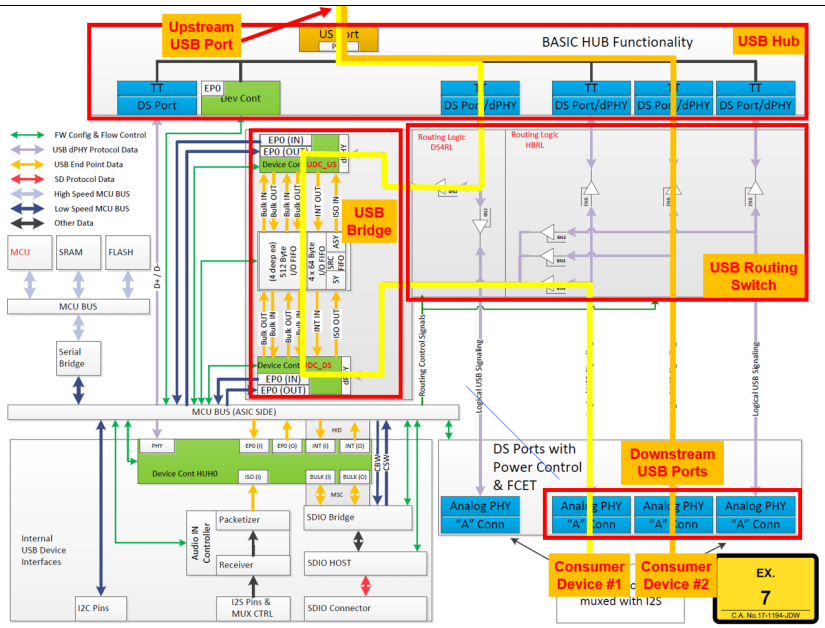

(EX2024 (Annotated).

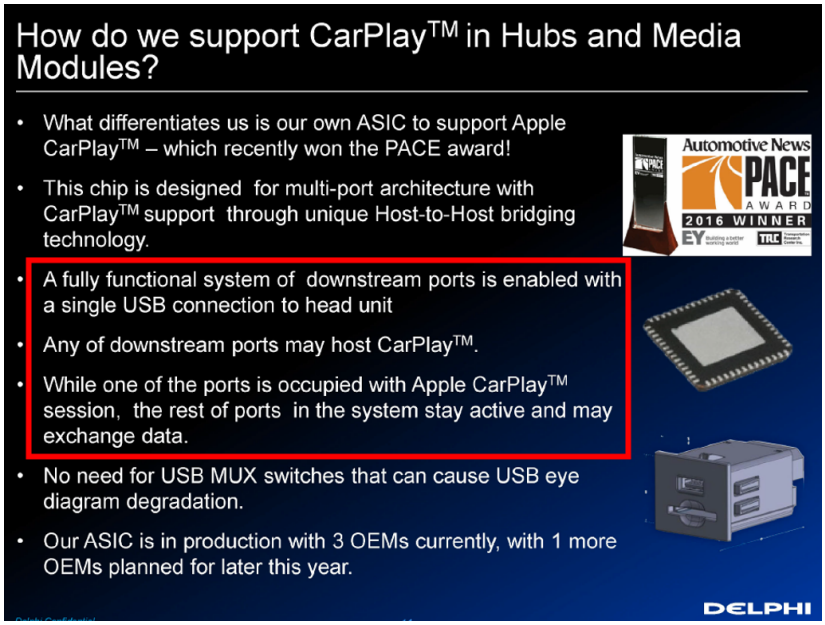

(EX2027, 11 (Annotated).

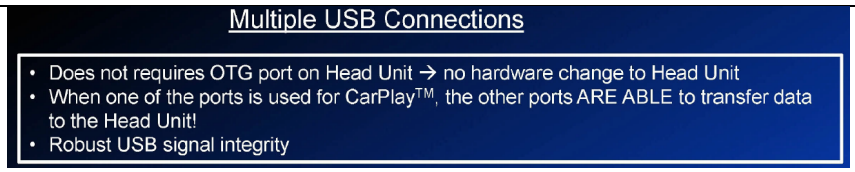

(EX2037, 21.

Key System Considerations	Two USB Paths	Port Reversal Hub	Delphi Dual Role Hub
Head Unit used "Host" port (OTG not required)	No	No	Yes
CarPlay™ available on any USB port	No	Yes	Yes
Other hub ports work during CarPlay™	Yes	No	Yes

(EX2037, 22.

160. In essence, claim 15 of the '962 Patent is directed to the ability to simultaneously connect a consumer device acting as a USB host to the USB hub through the USB bridge and connect a second consumer device acting as a USB device directly to the USB hub without the need for reconnection, re-enumeration, or otherwise disrupting either device's ability to communicate with the upstream host. This is the core concept behind the functionality described by automakers and suppliers as "persistent downstream USB."

I declare that all statements made herein of my own knowledge are true and that all statements made on information and belief are believed to be true, and that these statements were made with knowledge that willful false statements and the like so made are punishable by fine or imprisonment, or both, under section 1001 of Title 18 of the United States Code.

Dated: October 23, 2024

Henry H. Houh

Dr. Henry H. Houh