Aptiv's Demonstratives

MICROCHIP TECHNOLOGY INC., Petitioner,

v.

APTIV TECHNOLOGIES AG AND APTIV TECHNOLOGIES LIMITED, Patent Owners

Before The Patent Trial And Appeal Board

Case IPR Nos. 2024-00228, 2024-00229, 2024-00230, 2024-00495

PGR No. 2024-00011

April 16 & 17, 2025

DEMONSTRATIVE EXHIBIT — NOT EVIDENCE

’420 Patent

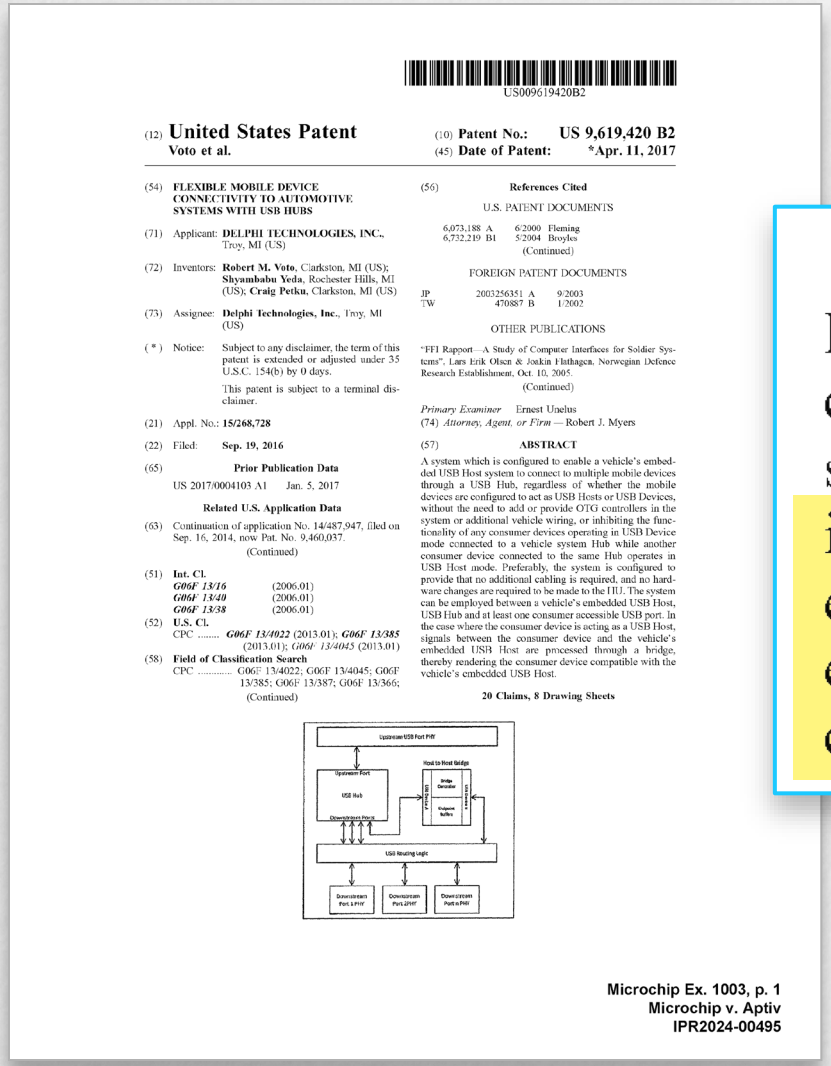

US009619420B2

(12) **United States Patent**
Voto et al.

(10) **Patent No.: US 9,619,420 B2**
(45) **Date of Patent: *Apr. 11, 2017**

(54) **FLEXIBLE MOBILE DEVICE CONNECTIVITY TO AUTOMOTIVE SYSTEMS WITH USB HUBS**

(71) Applicant: **DELPHI TECHNOLOGIES, INC.**, Troy, MI (US)

(72) Inventors: **Robert M. Voto**, Clarkston, MI (US); **Shyambabu Yeda**, Rochester Hills, MI (US); **Craig Petku**, Clarkston, MI (US)

(73) Assignee: **Delphi Technologies, Inc.**, Troy, MI (US)

(*) Notice: Subject to any disclaimer, the term of this patent is extended or adjusted under 35 U.S.C. 154(b) by 0 days.

This patent is subject to a terminal disclaimer.

(21) Appl. No.: **15/268,728**

(22) Filed: **Sep. 19, 2016**

(65) **Prior Publication Data**

US 2017/0004103 A1 Jan. 5, 2017

Related U.S. Application Data

(63) Continuation of application No. 14/487,947, filed on Sep. 16, 2014, now Pat. No. 9,460,037.

(Continued)

(51) **Int. Cl.**
G06F 13/16 (2006.01)
G06F 13/40 (2006.01)
G06F 13/38 (2006.01)

(52) **U.S. Cl.**
CPC ***G06F 13/4022*** (2013.01); ***G06F 13/385*** (2013.01); *G06F 13/4045* (2013.01)

(58) **Field of Classification Search**
CPC G06F 13/4022; G06F 13/4045; G06F 13/385; G06F 13/387; G06F 13/366;

(Continued)

(56) **References Cited**

U.S. PATENT DOCUMENTS

6,073,188 A 6/2000 Fleming
6,732,219 B1 5/2004 Broyles

(Continued)

FOREIGN PATENT DOCUMENTS

JP 2003256351 A 9/2003
TW 470887 B 1/2002

OTHER PUBLICATIONS

"FFI Rapport—A Study of Computer Interfaces for Soldier Systems", Lars Erik Olsen & Joakim Hathagen, Norwegian Defence Research Establishment, Oct. 10, 2005.

(Continued)

Primary Examiner Ernest Unelus
(74) *Attorney, Agent, or Firm* — Robert J. Myers

(57) **ABSTRACT**

A system which is configured to enable a vehicle's embedded USB Host system to connect to multiple mobile devices through a USB Hub, regardless of whether the mobile devices are configured to act as USB Hosts or USB Devices, without the need to add or provide OTG controllers in the system or additional vehicle wiring, or inhibiting the functionality of any consumer devices operating in USB Device mode connected to a vehicle system Hub while another consumer device connected to the same Hub operates in USB Host mode. Preferably, the system is configured to provide that no additional cabling is required, and no hardware changes are required to be made to the HU. The system can be employed between a vehicle's embedded USB Host, USB Hub and at least one consumer accessible USB port. In the case where the consumer device is acting as a USB Host, signals between the consumer device and the vehicle's embedded USB Host are processed through a bridge, thereby rendering the consumer device compatible with the vehicle's embedded USB Host.

20 Claims, 8 Drawing Sheets

Microchip Ex. 1003, p. 1
Microchip v. Aptiv
IPR2024-00495

EX1003 at 1:17-24.

The present invention generally relates to Universal Serial Bus (“USB”) connectivity between, for example, mobile consumer devices and vehicle electronic systems. More specifically, the present invention relates to a system which is configured to provide that consumer devices that act as either USB host or USB device can connect to a vehicle’s embedded USB host that does not have On the Go (“OTG”) capability through an embedded USB hub in the vehicle.

-228 Pet. (Paper 1), 12-16.

DEMONSTRATIVE EXHIBIT — NOT EVIDENCE

’420 Patent

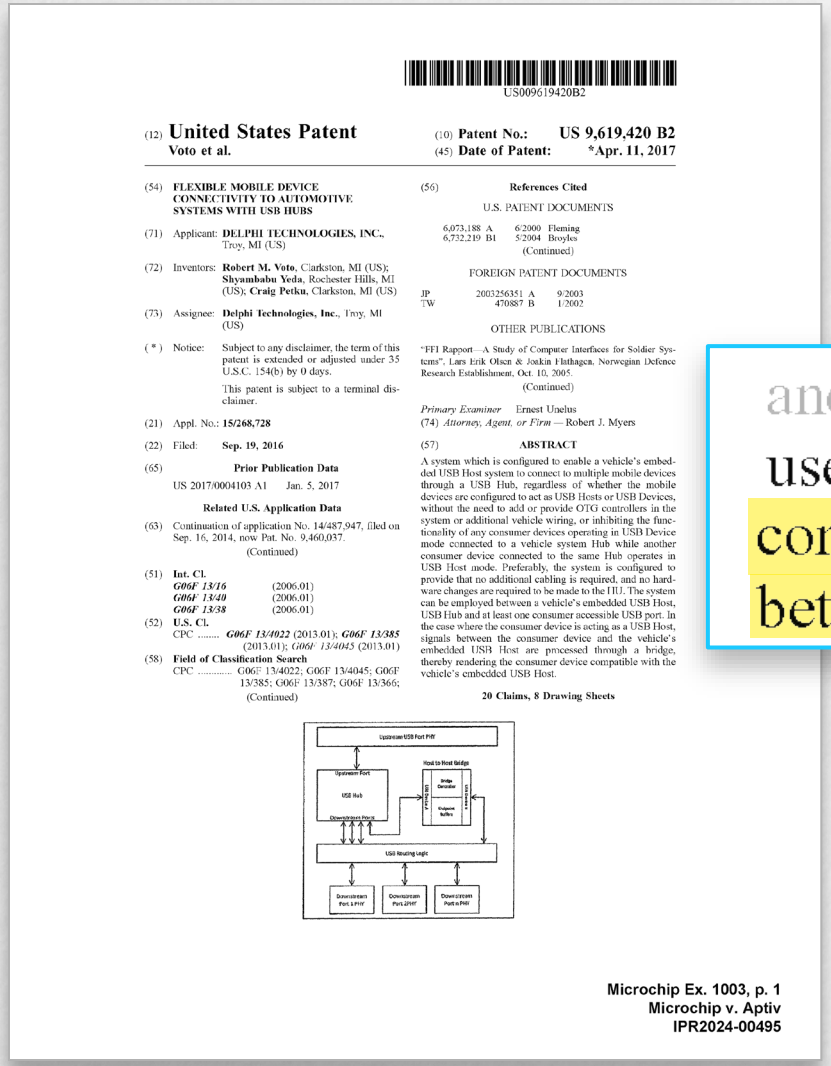

US009619420B2

(12) **United States Patent**
Voto et al.

(10) **Patent No.: US 9,619,420 B2**
(45) **Date of Patent: *Apr. 11, 2017**

(54) **FLEXIBLE MOBILE DEVICE CONNECTIVITY TO AUTOMOTIVE SYSTEMS WITH USB HUBS**

(71) Applicant: **DELPHI TECHNOLOGIES, INC.**, Troy, MI (US)

(72) Inventors: **Robert M. Voto**, Clarkston, MI (US); **Shyambabu Yeda**, Rochester Hills, MI (US); **Craig Petku**, Clarkston, MI (US)

(73) Assignee: **Delphi Technologies, Inc.**, Troy, MI (US)

(*) Notice: Subject to any disclaimer, the term of this patent is extended or adjusted under 35 U.S.C. 154(b) by 0 days.

This patent is subject to a terminal disclaimer.

(21) Appl. No.: **15/268,728**

(22) Filed: **Sep. 19, 2016**

(65) **Prior Publication Data**

US 2017/0004103 A1 Jan. 5, 2017

Related U.S. Application Data

(63) Continuation of application No. 14/487,947, filed on Sep. 16, 2014, now Pat. No. 9,460,037.

(Continued)

(51) **Int. Cl.**

G06F 13/16 (2006.01)
G06F 13/40 (2006.01)
G06F 13/38 (2006.01)

(52) **U.S. Cl.**

CPC ***G06F 13/4022*** (2013.01); ***G06F 13/385*** (2013.01); *G06F 13/4045* (2013.01)

(58) **Field of Classification Search**

CPC G06F 13/4022; G06F 13/4045; G06F 13/385; G06F 13/387; G06F 13/366;

(Continued)

(56) **References Cited**

U.S. PATENT DOCUMENTS

6,073,188 A 6/2000 Fleming
6,732,219 B1 5/2004 Broyles

(Continued)

FOREIGN PATENT DOCUMENTS

JP 2003256351 A 9/2003
TW 470887 B 1/2002

OTHER PUBLICATIONS

"FFI Rapport—A Study of Computer Interfaces for Soldier Systems", Lars Erik Olsen & Joakin Hathagen, Norwegian Defence Research Establishment, Oct. 10, 2005.

(Continued)

Primary Examiner Ernest Unelus
(74) *Attorney, Agent, or Firm* — Robert J. Myers

(57) **ABSTRACT**

A system which is configured to enable a vehicle's embedded USB Host system to connect to multiple mobile devices through a USB Hub, regardless of whether the mobile devices are configured to act as USB Hosts or USB Devices, without the need to add or provide OTG controllers in the system or additional vehicle wiring, or inhibiting the functionality of any consumer devices operating in USB Device mode connected to a vehicle system Hub while another consumer device connected to the same Hub operates in USB Host mode. Preferably, the system is configured to provide that no additional cabling is required, and no hardware changes are required to be made to the HU. The system can be employed between a vehicle's embedded USB Host, USB Hub and at least one consumer accessible USB port. In the case where the consumer device is acting as a USB Host, signals between the consumer device and the vehicle's embedded USB Host are processed through a bridge, thereby rendering the consumer device compatible with the vehicle's embedded USB Host.

20 Claims, 8 Drawing Sheets

Microchip Ex. 1003, p. 1
Microchip v. Aptiv
IPR2024-00495

EX1003 at 1:67-2:2.

and mass of the vehicle. This is accomplished through the use of USB Hubs. USB Hubs allow a single USB Host to connect to multiple USB Devices over a single cable between the USB Host and the USB Hub. As shown in

-228 Pet. (Paper 1), 12-16.

DEMONSTRATIVE EXHIBIT — NOT EVIDENCE

’420 Patent

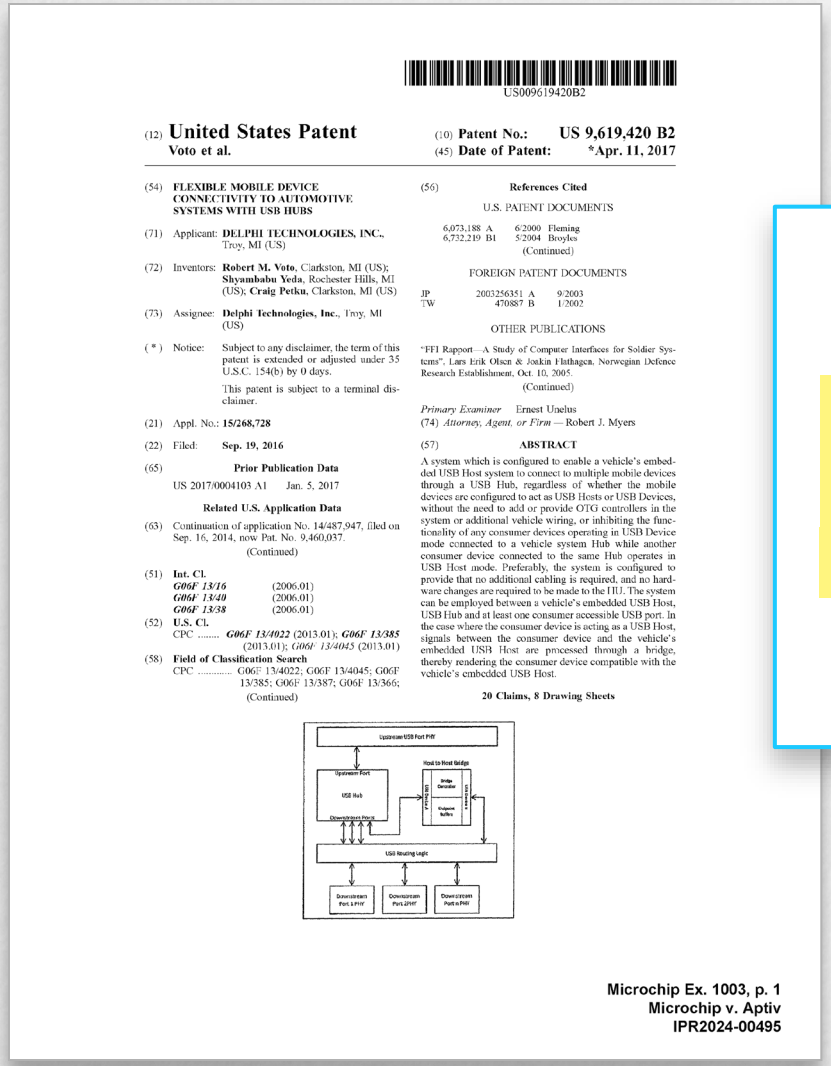

US009619420B2

(12) **United States Patent**
Voto et al.

(10) **Patent No.: US 9,619,420 B2**
(45) **Date of Patent: *Apr. 11, 2017**

(54) **FLEXIBLE MOBILE DEVICE CONNECTIVITY TO AUTOMOTIVE SYSTEMS WITH USB HUBS**

(71) Applicant: **DELPHI TECHNOLOGIES, INC.**, Troy, MI (US)

(72) Inventors: **Robert M. Voto**, Clarkston, MI (US); **Shyambabu Yeda**, Rochester Hills, MI (US); **Craig Petku**, Clarkston, MI (US)

(73) Assignee: **Delphi Technologies, Inc.**, Troy, MI (US)

(*) Notice: Subject to any disclaimer, the term of this patent is extended or adjusted under 35 U.S.C. 154(b) by 0 days.

This patent is subject to a terminal disclaimer.

(21) Appl. No.: **15/268,728**

(22) Filed: **Sep. 19, 2016**

(65) **Prior Publication Data**

US 2017/0004103 A1 Jan. 5, 2017

Related U.S. Application Data

(63) Continuation of application No. 14/487,947, filed on Sep. 16, 2014, now Pat. No. 9,460,037.

(Continued)

(51) **Int. Cl.**

G06F 13/16 (2006.01)
G06F 13/40 (2006.01)
G06F 13/38 (2006.01)

(52) **U.S. Cl.**

CPC ***G06F 13/4022*** (2013.01); ***G06F 13/385*** (2013.01); *G06F 13/4045* (2013.01)

(58) **Field of Classification Search**

CPC G06F 13/4022; G06F 13/4045; G06F 13/385; G06F 13/387; G06F 13/366;

(Continued)

(56) **References Cited**

U.S. PATENT DOCUMENTS

6,073,188 A 6/2000 Fleming
6,732,219 B1 5/2004 Broyles

(Continued)

FOREIGN PATENT DOCUMENTS

JP 2003256351 A 9/2003
TW 470887 B 1/2002

OTHER PUBLICATIONS

"FFI Rapport—A Study of Computer Interfaces for Soldier Systems", Lars Erik Olsen & Joakin Hathagen, Norwegian Defence Research Establishment, Oct. 10, 2005.

(Continued)

Primary Examiner Ernest Unelus
(74) *Attorney, Agent, or Firm* — Robert J. Myers

(57) **ABSTRACT**

A system which is configured to enable a vehicle's embedded USB Host system to connect to multiple mobile devices through a USB Hub, regardless of whether the mobile devices are configured to act as USB Hosts or USB Devices, without the need to add or provide OTG controllers in the system or additional vehicle wiring, or inhibiting the functionality of any consumer devices operating in USB Device mode connected to a vehicle system Hub while another consumer device connected to the same Hub operates in USB Host mode. Preferably, the system is configured to provide that no additional cabling is required, and no hardware changes are required to be made to the HU. The system can be employed between a vehicle's embedded USB Host, USB Hub and at least one consumer accessible USB port. In the case where the consumer device is acting as a USB Host, signals between the consumer device and the vehicle's embedded USB Host are processed through a bridge, thereby rendering the consumer device compatible with the vehicle's embedded USB Host.

20 Claims, 8 Drawing Sheets

Microchip Ex. 1003, p. 1
Microchip v. Aptiv
IPR2024-00495

EX1003 at 3:4-16.

As explained previously, automotive systems have a USB Host and require USB Devices to connect to it. If a phone acts as a USB Host, then the system will not function since by USB convention, two USB Hosts cannot directly connect with each other. Automotive manufacturers desire compatibility with smart phones and are therefore motivated to adapt to this changing technology. A redesign of the USB

-228 Pet. (Paper 1), 12-16.

DEMONSTRATIVE EXHIBIT — NOT EVIDENCE

’420 Patent

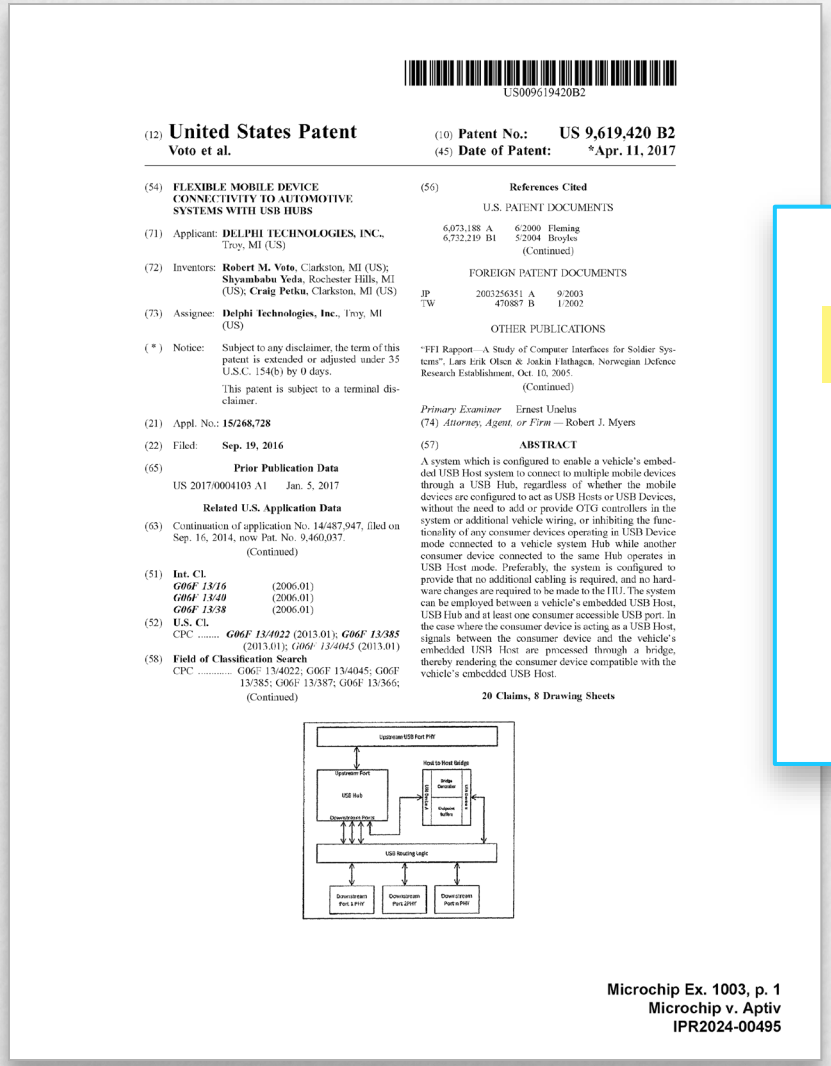

US009619420B2

(12) **United States Patent**
Voto et al.

(10) **Patent No.: US 9,619,420 B2**
(45) **Date of Patent: *Apr. 11, 2017**

(54) **FLEXIBLE MOBILE DEVICE CONNECTIVITY TO AUTOMOTIVE SYSTEMS WITH USB HUBS**

(71) Applicant: **DELPHI TECHNOLOGIES, INC.**, Troy, MI (US)

(72) Inventors: **Robert M. Voto**, Clarkston, MI (US); **Shyambabu Yeda**, Rochester Hills, MI (US); **Craig Petku**, Clarkston, MI (US)

(73) Assignee: **Delphi Technologies, Inc.**, Troy, MI (US)

(*) Notice: Subject to any disclaimer, the term of this patent is extended or adjusted under 35 U.S.C. 154(b) by 0 days.

This patent is subject to a terminal disclaimer.

(21) Appl. No.: **15/268,728**

(22) Filed: **Sep. 19, 2016**

(65) **Prior Publication Data**

US 2017/0004103 A1 Jan. 5, 2017

Related U.S. Application Data

(63) Continuation of application No. 14/487,947, filed on Sep. 16, 2014, now Pat. No. 9,460,037.

(Continued)

(51) **Int. Cl.**
G06F 13/16 (2006.01)
G06F 13/40 (2006.01)
G06F 13/38 (2006.01)

(52) **U.S. Cl.**
CPC ***G06F 13/4022*** (2013.01); ***G06F 13/385*** (2013.01); *G06F 13/4045* (2013.01)

(58) **Field of Classification Search**
CPC G06F 13/4022; G06F 13/4045; G06F 13/385; G06F 13/387; G06F 13/366;

(Continued)

(56) **References Cited**

U.S. PATENT DOCUMENTS

6,073,188 A 6/2000 Fleming
6,732,219 B1 5/2004 Broyles

(Continued)

FOREIGN PATENT DOCUMENTS

JP 2003256351 A 9/2003
TW 470887 B 1/2002

OTHER PUBLICATIONS

"FFI Rapport—A Study of Computer Interfaces for Soldier Systems", Lars Erik Olsen & Joakin Hathagen, Norwegian Defence Research Establishment, Oct. 10, 2005.

(Continued)

Primary Examiner Ernest Unelus
(74) *Attorney, Agent, or Firm* — Robert J. Myers

(57) **ABSTRACT**

A system which is configured to enable a vehicle's embedded USB Host system to connect to multiple mobile devices through a USB Hub, regardless of whether the mobile devices are configured to act as USB Hosts or USB Devices, without the need to add or provide OTG controllers in the system or additional vehicle wiring, or inhibiting the functionality of any consumer devices operating in USB Device mode connected to a vehicle system Hub while another consumer device connected to the same Hub operates in USB Host mode. Preferably, the system is configured to provide that no additional cabling is required, and no hardware changes are required to be made to the HU. The system can be employed between a vehicle's embedded USB Host, USB Hub and at least one consumer accessible USB port. In the case where the consumer device is acting as a USB Host, signals between the consumer device and the vehicle's embedded USB Host are processed through a bridge, thereby rendering the consumer device compatible with the vehicle's embedded USB Host.

20 Claims, 8 Drawing Sheets

Microchip Ex. 1003, p. 1
Microchip v. Aptiv
IPR2024-00495

EX1003 at 3:4-16.

adapt to this changing technology. A redesign of the USB architecture in the vehicle is thus necessary such that the vehicle can act either as the USB Host (when necessary to connect to USB Devices such as memory sticks, thumb drives, etc.) or USB Device (when necessary to connect to USB Hosts, such as a smart phone which demands to be USB Host rather than USB Device.

-228 Pet. (Paper 1), 12-16.

DEMONSTRATIVE EXHIBIT — NOT EVIDENCE

’420 Patent

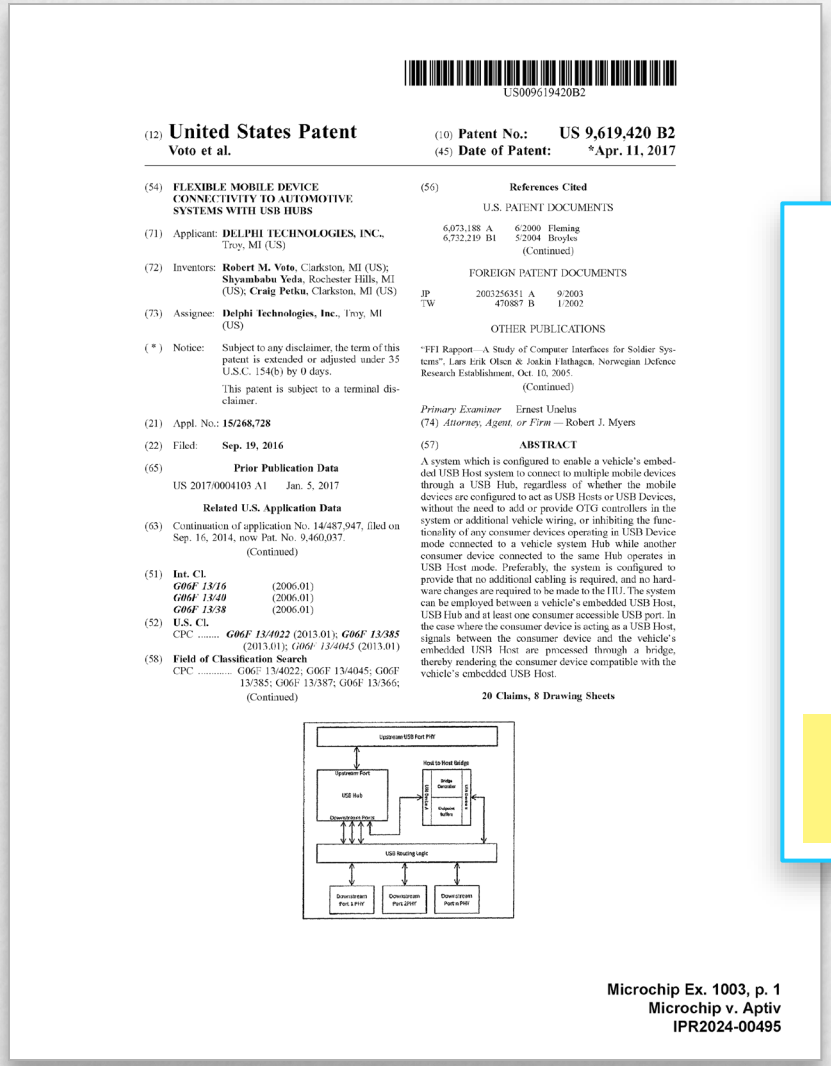

US009619420B2

(12) **United States Patent**
Voto et al.

(10) **Patent No.: US 9,619,420 B2**
(45) **Date of Patent: *Apr. 11, 2017**

(54) **FLEXIBLE MOBILE DEVICE CONNECTIVITY TO AUTOMOTIVE SYSTEMS WITH USB HUBS**

(71) Applicant: **DELPHI TECHNOLOGIES, INC.**, Troy, MI (US)

(72) Inventors: **Robert M. Voto**, Clarkston, MI (US); **Shyambabu Yeda**, Rochester Hills, MI (US); **Craig Petku**, Clarkston, MI (US)

(73) Assignee: **Delphi Technologies, Inc.**, Troy, MI (US)

(*) Notice: Subject to any disclaimer, the term of this patent is extended or adjusted under 35 U.S.C. 154(b) by 0 days.

This patent is subject to a terminal disclaimer.

(21) Appl. No.: **15/268,728**

(22) Filed: **Sep. 19, 2016**

(65) **Prior Publication Data**

US 2017/0004103 A1 Jan. 5, 2017

Related U.S. Application Data

(63) Continuation of application No. 14/487,947, filed on Sep. 16, 2014, now Pat. No. 9,460,037.

(Continued)

(51) **Int. Cl.**
G06F 13/16 (2006.01)
G06F 13/40 (2006.01)
G06F 13/38 (2006.01)

(52) **U.S. Cl.**
CPC ***G06F 13/4022*** (2013.01); ***G06F 13/385*** (2013.01); *G06F 13/4045* (2013.01)

(58) **Field of Classification Search**
CPC G06F 13/4022; G06F 13/4045; G06F 13/385; G06F 13/387; G06F 13/366;

(Continued)

(56) **References Cited**

U.S. PATENT DOCUMENTS

6,073,188 A 6/2000 Fleming
6,732,219 B1 5/2004 Broyles

(Continued)

FOREIGN PATENT DOCUMENTS

JP 2003256351 A 9/2003
TW 470887 B 1/2002

OTHER PUBLICATIONS

"FFI Rapport—A Study of Computer Interfaces for Soldier Systems", Lars Erik Olsen & Joakim Hathagen, Norwegian Defence Research Establishment, Oct. 10, 2005.

(Continued)

Primary Examiner Ernest Unelus
(74) *Attorney, Agent, or Firm* — Robert J. Myers

(57) **ABSTRACT**

A system which is configured to enable a vehicle's embedded USB Host system to connect to multiple mobile devices through a USB Hub, regardless of whether the mobile devices are configured to act as USB Hosts or USB Devices, without the need to add or provide OTG controllers in the system or additional vehicle wiring, or inhibiting the functionality of any consumer devices operating in USB Device mode connected to a vehicle system Hub while another consumer device connected to the same Hub operates in USB Host mode. Preferably, the system is configured to provide that no additional cabling is required, and no hardware changes are required to be made to the HU. The system can be employed between a vehicle's embedded USB Host, USB Hub and at least one consumer accessible USB port. In the case where the consumer device is acting as a USB Host, signals between the consumer device and the vehicle's embedded USB Host are processed through a bridge, thereby rendering the consumer device compatible with the vehicle's embedded USB Host.

20 Claims, 8 Drawing Sheets

Microchip Ex. 1003, p. 1
Microchip v. Aptiv
IPR2024-00495

EX1003 at 3:18-26.

The USB organization has added a standard that addresses the need for devices to act as either USB Host or USB Device and as such can be considered a “dual role” USB controller. It is referred to in USB nomenclature as “On the Go” or “OTG” for short. Any device that meets the OTG standard can act as either USB Host or USB Device and can change roles dynamically. Therefore, one possible approach to modifying the vehicle USB architecture to support all use cases is to upgrade the vehicle’s USB Host to USB OTG.

-228 Pet. (Paper 1), 12-16.

DEMONSTRATIVE EXHIBIT — NOT EVIDENCE

’420 Patent

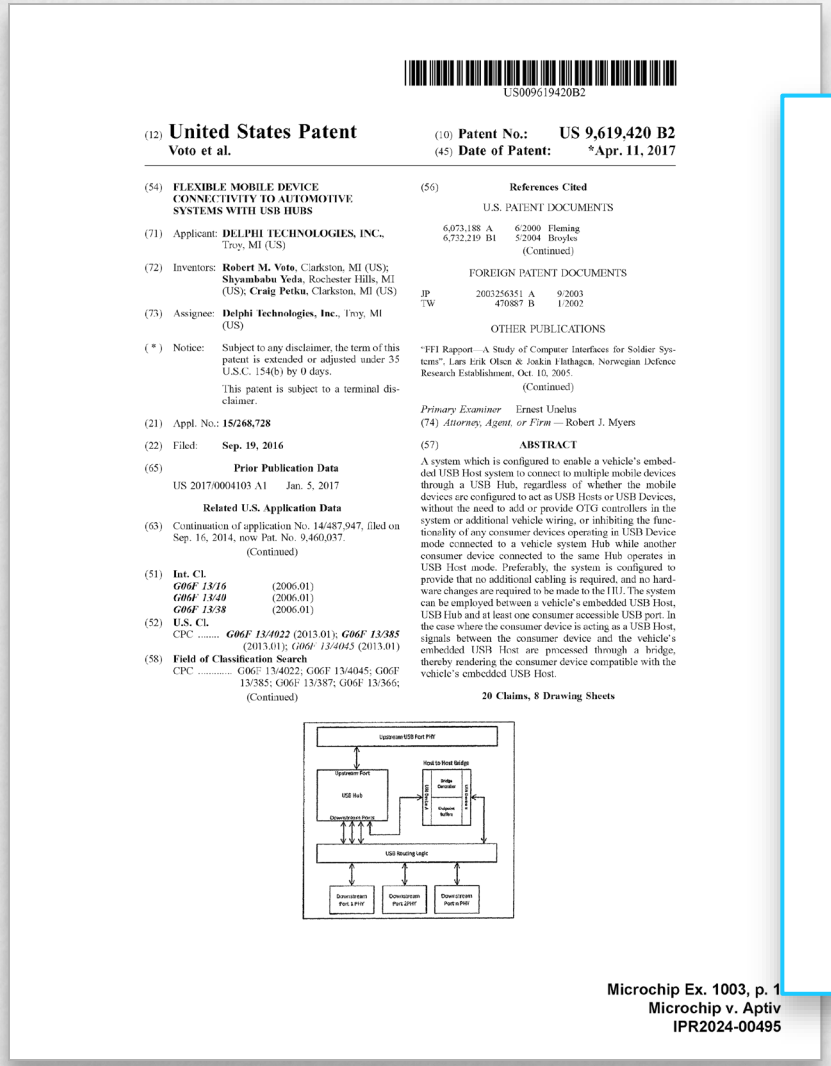

US009619420B2

(12) **United States Patent**
Voto et al.

(10) **Patent No.: US 9,619,420 B2**
(45) **Date of Patent: *Apr. 11, 2017**

(54) **FLEXIBLE MOBILE DEVICE CONNECTIVITY TO AUTOMOTIVE SYSTEMS WITH USB HUBS**

(71) Applicant: **DELPHI TECHNOLOGIES, INC.**, Troy, MI (US)

(72) Inventors: **Robert M. Voto**, Clarkston, MI (US); **Shyambabu Yeda**, Rochester Hills, MI (US); **Craig Petku**, Clarkston, MI (US)

(73) Assignee: **Delphi Technologies, Inc.**, Troy, MI (US)

(*) Notice: Subject to any disclaimer, the term of this patent is extended or adjusted under 35 U.S.C. 154(b) by 0 days.

This patent is subject to a terminal disclaimer.

(21) Appl. No.: **15/268,728**

(22) Filed: **Sep. 19, 2016**

(65) **Prior Publication Data**

US 2017/0004103 A1 Jan. 5, 2017

Related U.S. Application Data

(63) Continuation of application No. 14/487,947, filed on Sep. 16, 2014, now Pat. No. 9,460,037.

(Continued)

(51) **Int. Cl.**
G06F 13/16 (2006.01)
G06F 13/40 (2006.01)
G06F 13/38 (2006.01)

(52) **U.S. Cl.**
CPC ***G06F 13/4022*** (2013.01); ***G06F 13/385*** (2013.01); *G06F 13/4045* (2013.01)

(58) **Field of Classification Search**
CPC G06F 13/4022; G06F 13/4045; G06F 13/385; G06F 13/387; G06F 13/366;

(Continued)

(56) **References Cited**

U.S. PATENT DOCUMENTS

6,673,188 A 6/2000 Fleming
6,732,219 B1 5/2004 Broyles

(Continued)

FOREIGN PATENT DOCUMENTS

JP 2003256351 A 9/2003
TW 470887 B 1/2002

OTHER PUBLICATIONS

"FFI Rapport—A Study of Computer Interfaces for Soldier Systems", Lars Erik Olsen & Joakim Hathagen, Norwegian Defence Research Establishment, Oct. 10, 2005.

(Continued)

Primary Examiner Ernest Unelus
(74) *Attorney, Agent, or Firm* — Robert J. Myers

(57) **ABSTRACT**

A system which is configured to enable a vehicle's embedded USB Host system to connect to multiple mobile devices through a USB Hub, regardless of whether the mobile devices are configured to act as USB Hosts or USB Devices, without the need to add or provide OTG controllers in the system or additional vehicle wiring, or inhibiting the functionality of any consumer devices operating in USB Device mode connected to a vehicle system Hub while another consumer device connected to the same Hub operates in USB Host mode. Preferably, the system is configured to provide that no additional cabling is required, and no hardware changes are required to be made to the HU. The system can be employed between a vehicle's embedded USB Host, USB Hub and at least one consumer accessible USB port. In the case where the consumer device is acting as a USB Host, signals between the consumer device and the vehicle's embedded USB Host are processed through a bridge, thereby rendering the consumer device compatible with the vehicle's embedded USB Host.

20 Claims, 8 Drawing Sheets

Microchip Ex. 1003, p. 1
Microchip v. Aptiv
IPR2024-00495

EX1003 at 3:27-39.

This solution addresses the issue but has some disadvantages. First, USB Hubs do not support OTG and can no longer be used in the system. Each consumer accessible USB port that supports OTG must have a dedicated wire link to a dedicated OTG controller in the Head Unit thus negating the wiring savings associated with use of USB Hubs. As a result several costly cables may need to be added to the vehicle’s electrical system. Second, there may not be enough OTG controllers available in the Head Unit to connect to each of the vehicle’s user accessible USB ports. This then forces the vehicle designer to choose a limited number of the many USB ports in the vehicle to support the OTG function and run dedicated USB cables to them. This can lead to user

-228 Pet. (Paper 1), 12-16.

DEMONSTRATIVE EXHIBIT — NOT EVIDENCE

’420 Patent

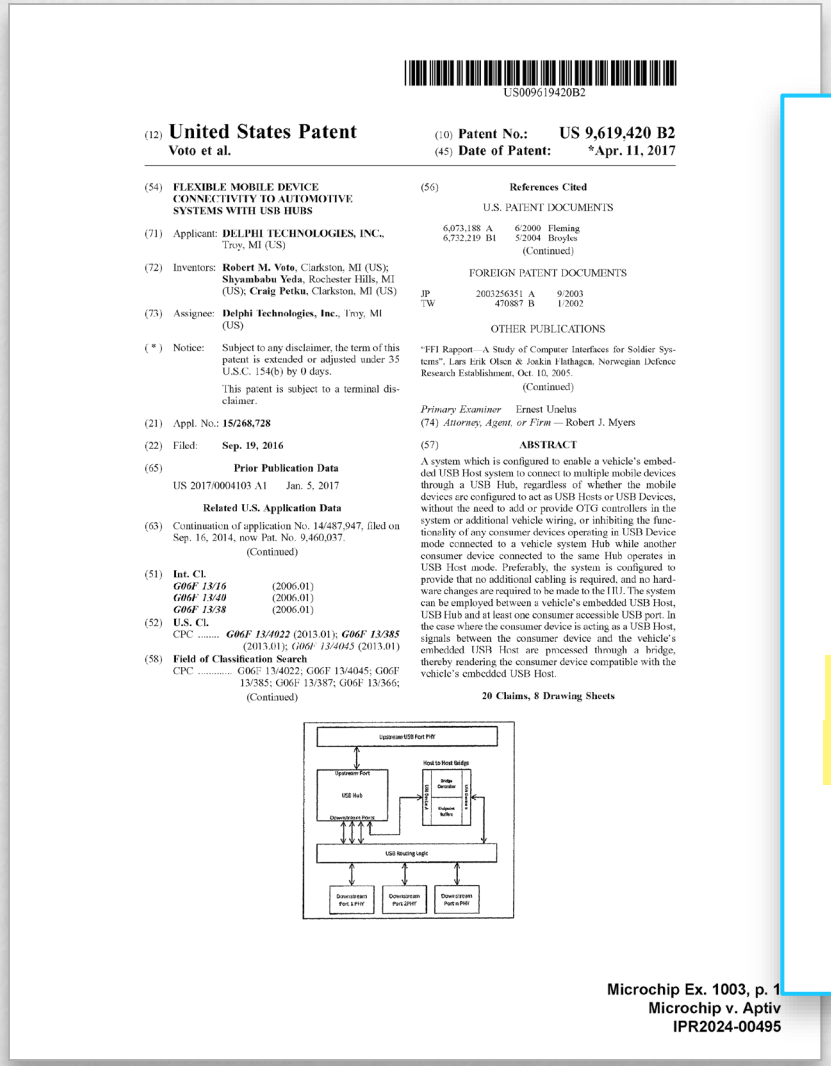

US009619420B2

(12) **United States Patent**
Voto et al.

(10) **Patent No.: US 9,619,420 B2**
(45) **Date of Patent: *Apr. 11, 2017**

(54) **FLEXIBLE MOBILE DEVICE CONNECTIVITY TO AUTOMOTIVE SYSTEMS WITH USB HUBS**

(71) Applicant: **DELPHI TECHNOLOGIES, INC.**, Troy, MI (US)

(72) Inventors: **Robert M. Voto**, Clarkston, MI (US); **Shyambabu Yeda**, Rochester Hills, MI (US); **Craig Petku**, Clarkston, MI (US)

(73) Assignee: **Delphi Technologies, Inc.**, Troy, MI (US)

(*) Notice: Subject to any disclaimer, the term of this patent is extended or adjusted under 35 U.S.C. 154(b) by 0 days.

This patent is subject to a terminal disclaimer.

(21) Appl. No.: **15/268,728**

(22) Filed: **Sep. 19, 2016**

(65) **Prior Publication Data**

US 2017/0004103 A1 Jan. 5, 2017

Related U.S. Application Data

(63) Continuation of application No. 14/487,947, filed on Sep. 16, 2014, now Pat. No. 9,460,037.

(Continued)

(51) **Int. Cl.**

G06F 13/16 (2006.01)
G06F 13/40 (2006.01)
G06F 13/38 (2006.01)

(52) **U.S. Cl.**

CPC ***G06F 13/4022*** (2013.01); ***G06F 13/385*** (2013.01); *G06F 13/4045* (2013.01)

(58) **Field of Classification Search**

CPC G06F 13/4022; G06F 13/4045; G06F 13/385; G06F 13/387; G06F 13/366;

(Continued)

(56) **References Cited**

U.S. PATENT DOCUMENTS

6,673,188 A 6/2000 Fleming
6,732,219 B1 5/2004 Broyles

(Continued)

FOREIGN PATENT DOCUMENTS

JP 2003256351 A 9/2003
TW 470887 B 1/2002

OTHER PUBLICATIONS

"FFI Rapport—A Study of Computer Interfaces for Soldier Systems", Lars Erik Olsen & Joakin Hathagen, Norwegian Defence Research Establishment, Oct. 10, 2005.

(Continued)

Primary Examiner Ernest Unelus
(74) *Attorney, Agent, or Firm* — Robert J. Myers

(57) **ABSTRACT**

A system which is configured to enable a vehicle's embedded USB Host system to connect to multiple mobile devices through a USB Hub, regardless of whether the mobile devices are configured to act as USB Hosts or USB Devices, without the need to add or provide OTG controllers in the system or additional vehicle wiring, or inhibiting the functionality of any consumer devices operating in USB Device mode connected to a vehicle system Hub while another consumer device connected to the same Hub operates in USB Host mode. Preferably, the system is configured to provide that no additional cabling is required, and no hardware changes are required to be made to the HU. The system can be employed between a vehicle's embedded USB Host, USB Hub and at least one consumer accessible USB port. In the case where the consumer device is acting as a USB Host, signals between the consumer device and the vehicle's embedded USB Host are processed through a bridge, thereby rendering the consumer device compatible with the vehicle's embedded USB Host.

20 Claims, 8 Drawing Sheets

Microchip Ex. 1003, p. 1
Microchip v. Aptiv
IPR2024-00495

EX1003 at 3:27-39.

This solution addresses the issue but has some disadvantages. First, USB Hubs do not support OTG and can no longer be used in the system. Each consumer accessible USB port that supports OTG must have a dedicated wire link to a dedicated OTG controller in the Head Unit thus negating the wiring savings associated with use of USB Hubs. As a result several costly cables may need to be added to the vehicle’s electrical system. Second, there may not be enough OTG controllers available in the Head Unit to connect to each of the vehicle’s user accessible USB ports. This then forces the vehicle designer to choose a limited number of the many USB ports in the vehicle to support the OTG function and run dedicated USB cables to them. This can lead to user

-228 Pet. (Paper 1), 12-16.

DEMONSTRATIVE EXHIBIT — NOT EVIDENCE

’420 Patent

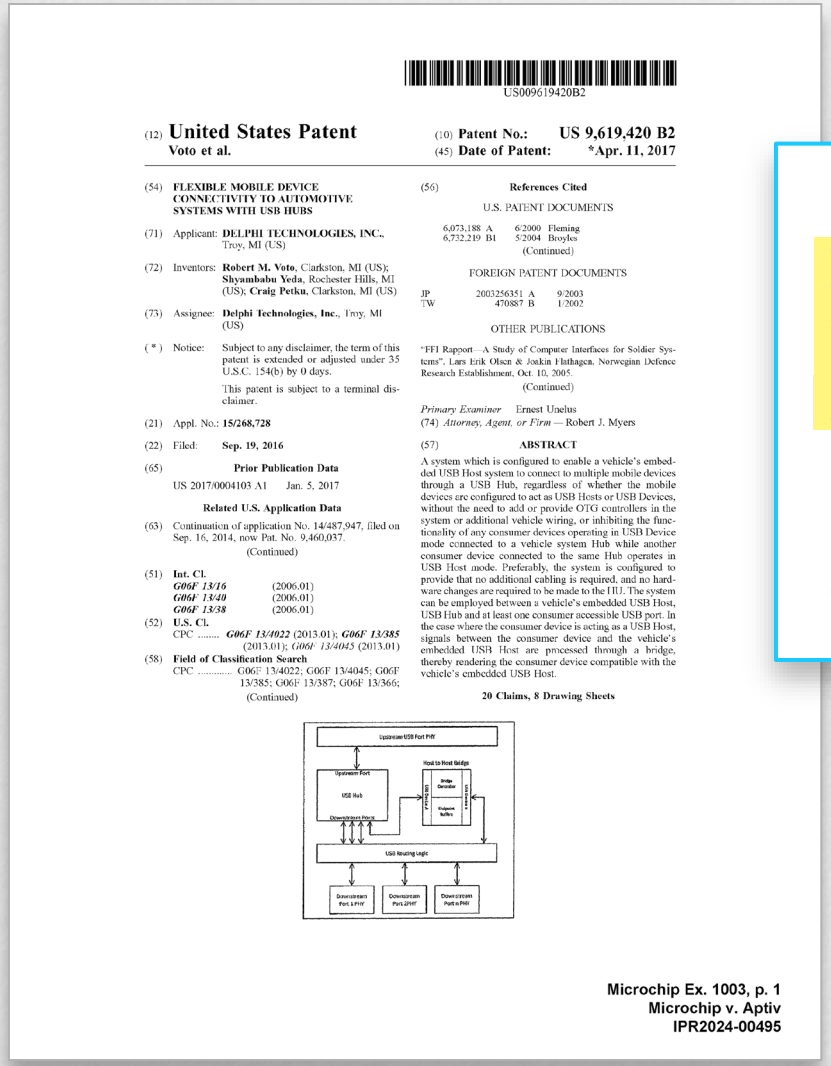

US009619420B2

(12) **United States Patent**
Voto et al.

(10) **Patent No.: US 9,619,420 B2**
(45) **Date of Patent: *Apr. 11, 2017**

(54) **FLEXIBLE MOBILE DEVICE CONNECTIVITY TO AUTOMOTIVE SYSTEMS WITH USB HUBS**

(71) Applicant: **DELPHI TECHNOLOGIES, INC.**, Troy, MI (US)

(72) Inventors: **Robert M. Voto**, Clarkston, MI (US); **Shyambabu Yeda**, Rochester Hills, MI (US); **Craig Petku**, Clarkston, MI (US)

(73) Assignee: **Delphi Technologies, Inc.**, Troy, MI (US)

(*) Notice: Subject to any disclaimer, the term of this patent is extended or adjusted under 35 U.S.C. 154(b) by 0 days.

This patent is subject to a terminal disclaimer.

(21) Appl. No.: **15/268,728**

(22) Filed: **Sep. 19, 2016**

(65) **Prior Publication Data**

US 2017/0004103 A1 Jan. 5, 2017

Related U.S. Application Data

(63) Continuation of application No. 14/487,947, filed on Sep. 16, 2014, now Pat. No. 9,460,037.

(Continued)

(51) **Int. Cl.**

G06F 13/16 (2006.01)
G06F 13/40 (2006.01)
G06F 13/38 (2006.01)

(52) **U.S. Cl.**

CPC ***G06F 13/4022*** (2013.01); ***G06F 13/385*** (2013.01); *G06F 13/4045* (2013.01)

(58) **Field of Classification Search**

CPC G06F 13/4022; G06F 13/4045; G06F 13/385; G06F 13/387; G06F 13/366;

(Continued)

(56) **References Cited**

U.S. PATENT DOCUMENTS

6,073,188 A 6/2000 Fleming
6,732,219 B1 5/2004 Broyles

(Continued)

FOREIGN PATENT DOCUMENTS

JP 2003256351 A 9/2003
TW 470887 B 1/2002

OTHER PUBLICATIONS

"FFI Rapport—A Study of Computer Interfaces for Soldier Systems", Lars Erik Olsen & Joakin Hathagen, Norwegian Defence Research Establishment, Oct. 10, 2005.

(Continued)

Primary Examiner Ernest Unelus
(74) *Attorney, Agent, or Firm* — Robert J. Myers

(57) **ABSTRACT**

A system which is configured to enable a vehicle's embedded USB Host system to connect to multiple mobile devices through a USB Hub, regardless of whether the mobile devices are configured to act as USB Hosts or USB Devices, without the need to add or provide OTG controllers in the system or additional vehicle wiring, or inhibiting the functionality of any consumer devices operating in USB Device mode connected to a vehicle system Hub while another consumer device connected to the same Hub operates in USB Host mode. Preferably, the system is configured to provide that no additional cabling is required, and no hardware changes are required to be made to the HU. The system can be employed between a vehicle's embedded USB Host, USB Hub and at least one consumer accessible USB port. In the case where the consumer device is acting as a USB Host, signals between the consumer device and the vehicle's embedded USB Host are processed through a bridge, thereby rendering the consumer device compatible with the vehicle's embedded USB Host.

20 Claims, 8 Drawing Sheets

Microchip Ex. 1003, p. 1
Microchip v. Aptiv
IPR2024-00495

EX1003 at 3:46-56.

Another possible solution is to implement custom USB hubs wherein the USB Hub is able to dynamically swap its upstream port with one it’s downstream ports when commanded to do so. System solutions built with this concept still require OTG controllers in the head unit but benefit from the fact that no additional wires need to be installed in the car. The existing USB cable between the USB OTG Host

-228 Pet. (Paper 1), 12-16.

DEMONSTRATIVE EXHIBIT — NOT EVIDENCE

’420 Patent

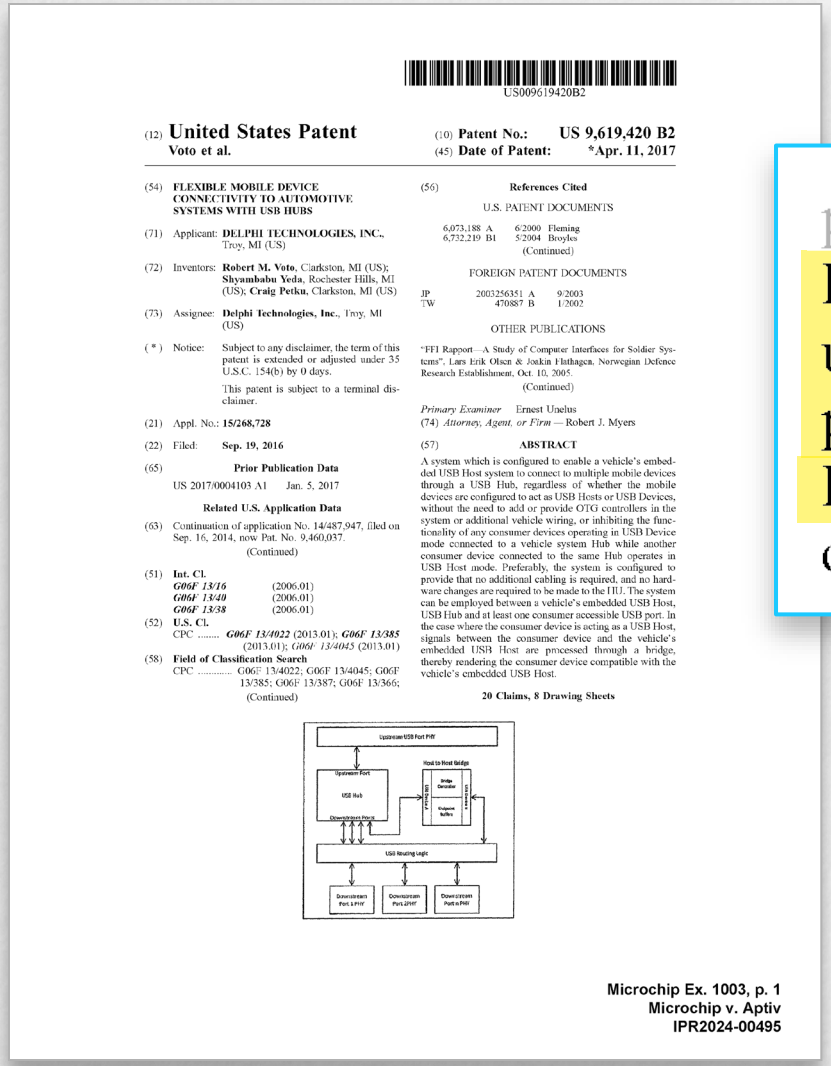

US009619420B2

(12) **United States Patent**
Voto et al.

(10) **Patent No.: US 9,619,420 B2**
(45) **Date of Patent: *Apr. 11, 2017**

(54) **FLEXIBLE MOBILE DEVICE CONNECTIVITY TO AUTOMOTIVE SYSTEMS WITH USB HUBS**

(71) Applicant: **DELPHI TECHNOLOGIES, INC.**, Troy, MI (US)

(72) Inventors: **Robert M. Voto**, Clarkston, MI (US); **Shyambabu Yeda**, Rochester Hills, MI (US); **Craig Petku**, Clarkston, MI (US)

(73) Assignee: **Delphi Technologies, Inc.**, Troy, MI (US)

(*) Notice: Subject to any disclaimer, the term of this patent is extended or adjusted under 35 U.S.C. 154(b) by 0 days.

This patent is subject to a terminal disclaimer.

(21) Appl. No.: **15/268,728**

(22) Filed: **Sep. 19, 2016**

(65) **Prior Publication Data**

US 2017/0004103 A1 Jan. 5, 2017

Related U.S. Application Data

(63) Continuation of application No. 14/487,947, filed on Sep. 16, 2014, now Pat. No. 9,460,037.

(Continued)

(51) **Int. Cl.**
G06F 13/16 (2006.01)
G06F 13/40 (2006.01)
G06F 13/38 (2006.01)

(52) **U.S. Cl.**
CPC ***G06F 13/4022*** (2013.01); ***G06F 13/385*** (2013.01); *G06F 13/4045* (2013.01)

(58) **Field of Classification Search**
CPC G06F 13/4022; G06F 13/4045; G06F 13/385; G06F 13/387; G06F 13/366;

(Continued)

(56) **References Cited**

U.S. PATENT DOCUMENTS

6,073,188 A 6/2000 Fleming
6,732,219 B1 5/2004 Broyles

(Continued)

FOREIGN PATENT DOCUMENTS

JP 2003256351 A 9/2003
TW 470887 B 1/2002

OTHER PUBLICATIONS

"FFI Rapport—A Study of Computer Interfaces for Soldier Systems", Lars Erik Olsen & Joakin Hathagen, Norwegian Defence Research Establishment, Oct. 10, 2005.

(Continued)

Primary Examiner Ernest Unelus
(74) *Attorney, Agent, or Firm* — Robert J. Myers

(57) **ABSTRACT**

A system which is configured to enable a vehicle's embedded USB Host system to connect to multiple mobile devices through a USB Hub, regardless of whether the mobile devices are configured to act as USB Hosts or USB Devices, without the need to add or provide OTG controllers in the system or additional vehicle wiring, or inhibiting the functionality of any consumer devices operating in USB Device mode connected to a vehicle system Hub while another consumer device connected to the same Hub operates in USB Host mode. Preferably, the system is configured to provide that no additional cabling is required, and no hardware changes are required to be made to the HU. The system can be employed between a vehicle's embedded USB Host, USB Hub and at least one consumer accessible USB port. In the case where the consumer device is acting as a USB Host, signals between the consumer device and the vehicle's embedded USB Host are processed through a bridge, thereby rendering the consumer device compatible with the vehicle's embedded USB Host.

20 Claims, 8 Drawing Sheets

Microchip Ex. 1003, p. 1
Microchip v. Aptiv
IPR2024-00495

phone). This solution also has some disadvantages however. For example, when the USB Hub is commanded to swap its upstream port with a downstream port, all other downstream ports of the USB Hubs lose their data connection with the Head Unit. While in this mode the Head Unit access to the other downstream ports of the hub cease. This may prevent

EX1003 at 3:56-61.

-228 Pet. (Paper 1), 12-16.

DEMONSTRATIVE EXHIBIT — NOT EVIDENCE

’420 Patent

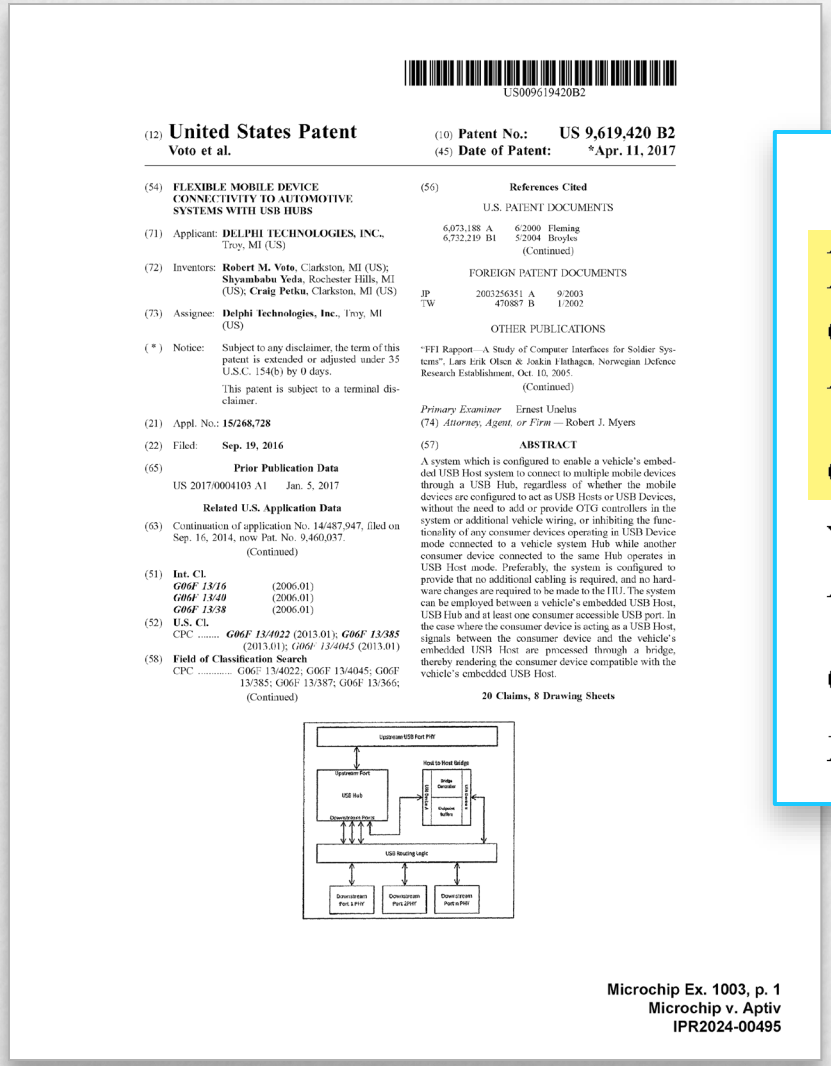

US009619420B2

(12) **United States Patent**
Voto et al.

(10) **Patent No.: US 9,619,420 B2**
(45) **Date of Patent: *Apr. 11, 2017**

(54) **FLEXIBLE MOBILE DEVICE CONNECTIVITY TO AUTOMOTIVE SYSTEMS WITH USB HUBS**

(71) Applicant: **DELPHI TECHNOLOGIES, INC.**, Troy, MI (US)

(72) Inventors: **Robert M. Voto**, Clarkston, MI (US); **Shyambabu Yeda**, Rochester Hills, MI (US); **Craig Petku**, Clarkston, MI (US)

(73) Assignee: **Delphi Technologies, Inc.**, Troy, MI (US)

(*) Notice: Subject to any disclaimer, the term of this patent is extended or adjusted under 35 U.S.C. 154(b) by 0 days.

This patent is subject to a terminal disclaimer.

(21) Appl. No.: **15/268,728**

(22) Filed: **Sep. 19, 2016**

(65) **Prior Publication Data**

US 2017/0004103 A1 Jan. 5, 2017

Related U.S. Application Data

(63) Continuation of application No. 14/487,947, filed on Sep. 16, 2014, now Pat. No. 9,460,037.

(Continued)

(51) **Int. Cl.**

G06F 13/16 (2006.01)
G06F 13/40 (2006.01)
G06F 13/38 (2006.01)

(52) **U.S. Cl.**

CPC ***G06F 13/4022*** (2013.01); ***G06F 13/385*** (2013.01); *G06F 13/4045* (2013.01)

(58) **Field of Classification Search**

CPC G06F 13/4022; G06F 13/4045; G06F 13/385; G06F 13/387; G06F 13/366;

(Continued)

(56) **References Cited**

U.S. PATENT DOCUMENTS

6,073,188 A 6/2000 Fleming
6,732,219 B1 5/2004 Broyles

(Continued)

FOREIGN PATENT DOCUMENTS

JP 2003256351 A 9/2003
TW 470887 B 1/2002

OTHER PUBLICATIONS

"FFI Rapport—A Study of Computer Interfaces for Soldier Systems", Lars Erik Olsen & Joakin Hathagen, Norwegian Defence Research Establishment, Oct. 10, 2005.

(Continued)

Primary Examiner Ernest Unelus
(74) *Attorney, Agent, or Firm* — Robert J. Myers

(57) **ABSTRACT**

A system which is configured to enable a vehicle's embedded USB Host system to connect to multiple mobile devices through a USB Hub, regardless of whether the mobile devices are configured to act as USB Hosts or USB Devices, without the need to add or provide OTG controllers in the system or additional vehicle wiring, or inhibiting the functionality of any consumer devices operating in USB Device mode connected to a vehicle system Hub while another consumer device connected to the same Hub operates in USB Host mode. Preferably, the system is configured to provide that no additional cabling is required, and no hardware changes are required to be made to the HU. The system can be employed between a vehicle's embedded USB Host, USB Hub and at least one consumer accessible USB port. In the case where the consumer device is acting as a USB Host, signals between the consumer device and the vehicle's embedded USB Host are processed through a bridge, thereby rendering the consumer device compatible with the vehicle's embedded USB Host.

20 Claims, 8 Drawing Sheets

Microchip Ex. 1003, p. 1
Microchip v. Aptiv
IPR2024-00495

EX1003 at 4:3-11.

An object of an embodiment of the present invention is to provide a system which is configured to enable a vehicle’s embedded USB Host system to connect to mobile devices through a USB Hub, regardless of whether the mobile devices are configured to act as USB Hosts or USB Devices, without the need to provide OTG or dual role controllers in the head unit and without the need to provide additional cabling in the vehicle. Preferably, no hardware changes are required to be made to the USB Host circuits in the HU.

-228 Pet. (Paper 1), 12-16.

DEMONSTRATIVE EXHIBIT — NOT EVIDENCE

’420 Patent

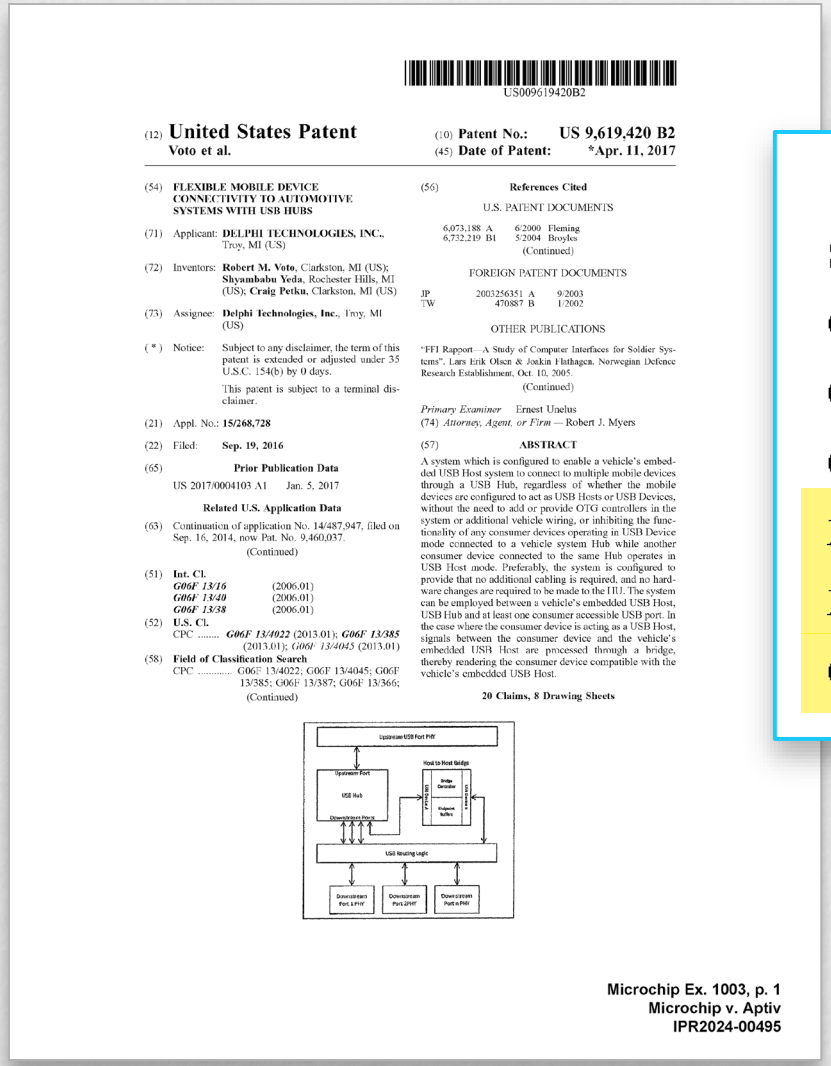

US009619420B2

(12) **United States Patent**
Voto et al.

(10) **Patent No.: US 9,619,420 B2**
(45) **Date of Patent: *Apr. 11, 2017**

(54) **FLEXIBLE MOBILE DEVICE CONNECTIVITY TO AUTOMOTIVE SYSTEMS WITH USB HUBS**

(71) Applicant: **DELPHI TECHNOLOGIES, INC.**, Troy, MI (US)

(72) Inventors: **Robert M. Voto**, Clarkston, MI (US); **Shyambabu Yeda**, Rochester Hills, MI (US); **Craig Petku**, Clarkston, MI (US)

(73) Assignee: **Delphi Technologies, Inc.**, Troy, MI (US)

(*) Notice: Subject to any disclaimer, the term of this patent is extended or adjusted under 35 U.S.C. 154(b) by 0 days.

This patent is subject to a terminal disclaimer.

(21) Appl. No.: **15/268,728**

(22) Filed: **Sep. 19, 2016**

(65) **Prior Publication Data**

US 2017/0004103 A1 Jan. 5, 2017

Related U.S. Application Data

(63) Continuation of application No. 14/487,947, filed on Sep. 16, 2014, now Pat. No. 9,460,037.

(Continued)

(51) **Int. Cl.**

G06F 13/16 (2006.01)
G06F 13/40 (2006.01)
G06F 13/38 (2006.01)

(52) **U.S. Cl.**

CPC ***G06F 13/4022*** (2013.01); ***G06F 13/385*** (2013.01); *G06F 13/4045* (2013.01)

(58) **Field of Classification Search**

CPC G06F 13/4022; G06F 13/4045; G06F 13/385; G06F 13/387; G06F 13/366;

(Continued)

(56) **References Cited**

U.S. PATENT DOCUMENTS

6,073,188 A 6/2000 Fleming
6,732,219 B1 5/2004 Broyles

(Continued)

FOREIGN PATENT DOCUMENTS

JP 2003256351 A 9/2003
TW 470887 B 1/2002

OTHER PUBLICATIONS

"FFI Rapport—A Study of Computer Interfaces for Soldier Systems", Lars Erik Olsen & Joakin Hathagen, Norwegian Defence Research Establishment, Oct. 10, 2005.

(Continued)

Primary Examiner Ernest Unelus
(74) *Attorney, Agent, or Firm* — Robert J. Myers

(57) **ABSTRACT**

A system which is configured to enable a vehicle's embedded USB Host system to connect to multiple mobile devices through a USB Hub, regardless of whether the mobile devices are configured to act as USB Hosts or USB Devices, without the need to add or provide OTG controllers in the system or additional vehicle wiring, or inhibiting the functionality of any consumer devices operating in USB Device mode connected to a vehicle system Hub while another consumer device connected to the same Hub operates in USB Host mode. Preferably, the system is configured to provide that no additional cabling is required, and no hardware changes are required to be made to the HU. The system can be employed between a vehicle's embedded USB Host, USB Hub and at least one consumer accessible USB port. In the case where the consumer device is acting as a USB Host, signals between the consumer device and the vehicle's embedded USB Host are processed through a bridge, thereby rendering the consumer device compatible with the vehicle's embedded USB Host.

20 Claims, 8 Drawing Sheets

Microchip Ex. 1003, p. 1
Microchip v. Aptiv
IPR2024-00495

EX1003 at 4:12-30.

An embodiment of the present invention provides a system which can be employed between a vehicle’s embedded USB Host and at least one, but preferably multiple, consumer facing USB ports provided in the vehicle for connection to consumer devices. The system is configured to recognize and control whether the consumer device is required to be connected to each USB port as a USB Host or as a USB Device. Further, the system is able to dynami-

-228 Pet. (Paper 1), 12-16.

DEMONSTRATIVE EXHIBIT — NOT EVIDENCE

’420 Patent

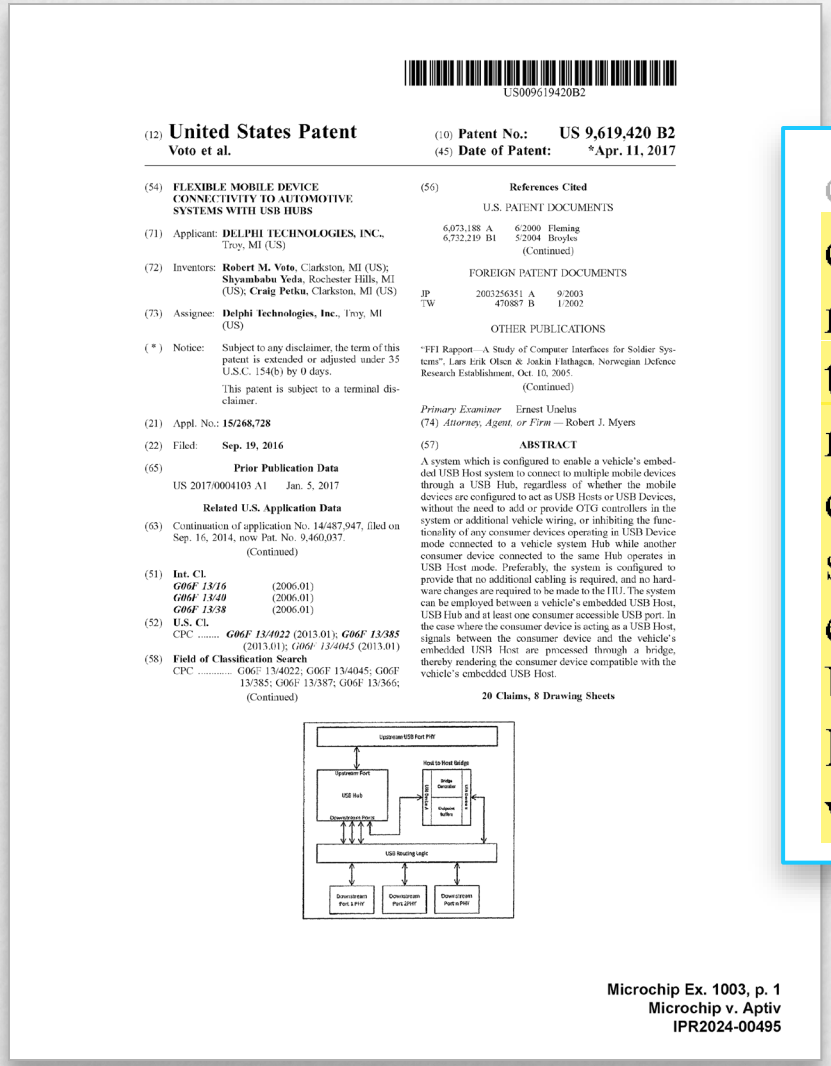

US009619420B2

(12) **United States Patent**
Voto et al.

(10) **Patent No.: US 9,619,420 B2**
(45) **Date of Patent: *Apr. 11, 2017**

(54) **FLEXIBLE MOBILE DEVICE CONNECTIVITY TO AUTOMOTIVE SYSTEMS WITH USB HUBS**

(71) Applicant: **DELPHI TECHNOLOGIES, INC.**, Troy, MI (US)

(72) Inventors: **Robert M. Voto**, Clarkston, MI (US); **Shyambabu Yeda**, Rochester Hills, MI (US); **Craig Petku**, Clarkston, MI (US)

(73) Assignee: **Delphi Technologies, Inc.**, Troy, MI (US)

(*) Notice: Subject to any disclaimer, the term of this patent is extended or adjusted under 35 U.S.C. 154(b) by 0 days.

This patent is subject to a terminal disclaimer.

(21) Appl. No.: **15/268,728**

(22) Filed: **Sep. 19, 2016**

(65) **Prior Publication Data**

US 2017/0004103 A1 Jan. 5, 2017

Related U.S. Application Data

(63) Continuation of application No. 14/487,947, filed on Sep. 16, 2014, now Pat. No. 9,460,037.

(Continued)

(51) **Int. Cl.**
G06F 13/16 (2006.01)
G06F 13/40 (2006.01)
G06F 13/38 (2006.01)

(52) **U.S. Cl.**
CPC ***G06F 13/4022*** (2013.01); ***G06F 13/385*** (2013.01); *G06F 13/4045* (2013.01)

(58) **Field of Classification Search**
CPC G06F 13/4022; G06F 13/4045; G06F 13/385; G06F 13/387; G06F 13/366;

(Continued)

(56) **References Cited**

U.S. PATENT DOCUMENTS

6,073,188 A 6/2000 Fleming
6,732,219 B1 5/2004 Broyles

(Continued)

FOREIGN PATENT DOCUMENTS

JP 2003256351 A 9/2003
TW 470887 B 1/2002

OTHER PUBLICATIONS

"FFI Rapport—A Study of Computer Interfaces for Soldier Systems", Lars Erik Olsen & Joakin Hathagen, Norwegian Defence Research Establishment, Oct. 10, 2005.

(Continued)

Primary Examiner Ernest Unelus
(74) *Attorney, Agent, or Firm* — Robert J. Myers

(57) **ABSTRACT**

A system which is configured to enable a vehicle's embedded USB Host system to connect to multiple mobile devices through a USB Hub, regardless of whether the mobile devices are configured to act as USB Hosts or USB Devices, without the need to add or provide OTG controllers in the system or additional vehicle wiring, or inhibiting the functionality of any consumer devices operating in USB Device mode connected to a vehicle system Hub while another consumer device connected to the same Hub operates in USB Host mode. Preferably, the system is configured to provide that no additional cabling is required, and no hardware changes are required to be made to the HU. The system can be employed between a vehicle's embedded USB Host, USB Hub and at least one consumer accessible USB port. In the case where the consumer device is acting as a USB Host, signals between the consumer device and the vehicle's embedded USB Host are processed through a bridge, thereby rendering the consumer device compatible with the vehicle's embedded USB Host.

20 Claims, 8 Drawing Sheets

Microchip Ex. 1003, p. 1
Microchip v. Aptiv
IPR2024-00495

EX1003 at 4:12-30.

or as a USB Device. Further, the system is able to dynamically switch the device connection between USB Device mode and USB Host mode when desired. In the case where the consumer device is acting as a USB Device, signals are routed normally through a USB Hub to the Head Unit. In the case where the consumer device is acting as a USB Host, signals between the consumer device and the vehicle's embedded USB Host are routed and processed through a USB Host to Host Bridge which is connected to the USB Hub, thereby rendering the consumer device compatible with the vehicle's embedded USB Host.

-228 Pet. (Paper 1), 12-16.

DEMONSTRATIVE EXHIBIT — NOT EVIDENCE

’420 Patent, Fig. 4

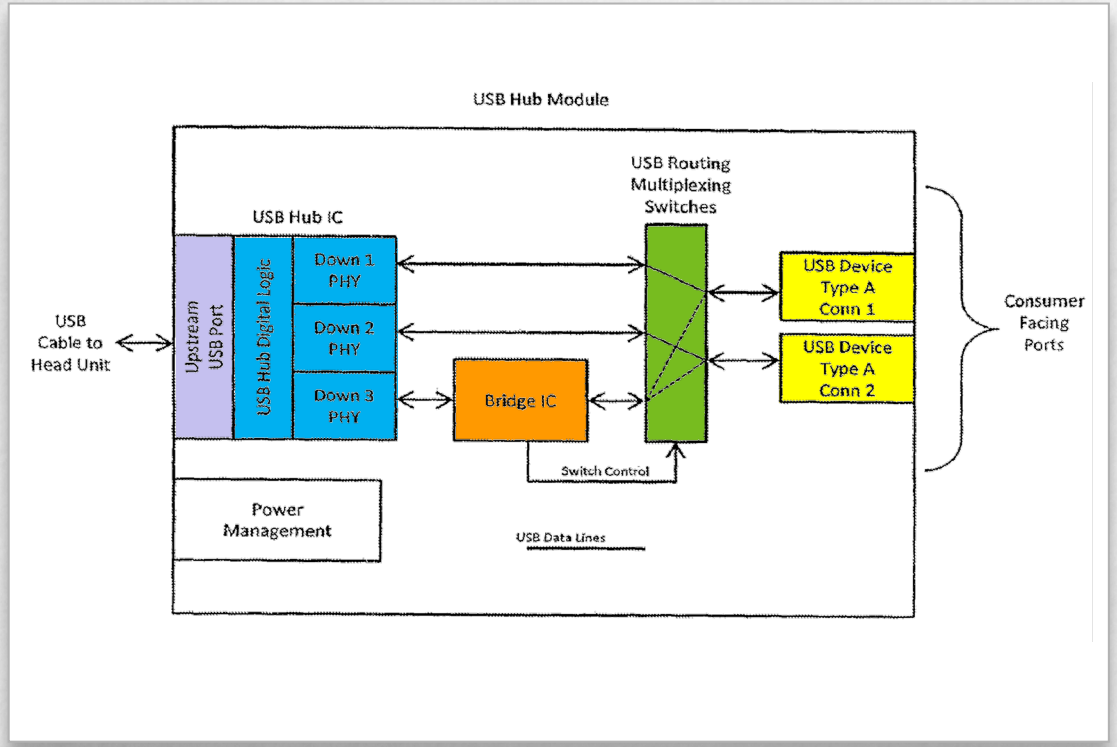

FIG. **4** illustrates a system which is in accordance with an embodiment of the present invention. The system is configured to effectively render a vehicle’s embedded USB Host compatible with consumer devices which are configured to also act as USB Host or USB Device. The system is in the

EX1003 at 5:46-50.

-228 Pet. (Paper 1), 12-16, 41.

DEMONSTRATIVE EXHIBIT — NOT EVIDENCE

’420 Patent, Fig. 4

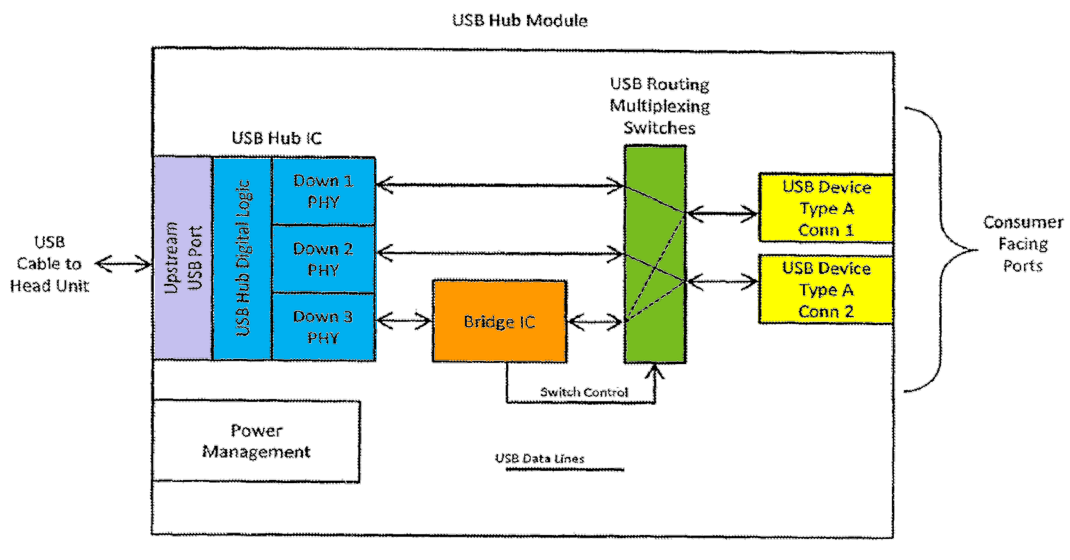

or USB Device. In the case where the consumer device is acting as USB Host, the USB Bridge controls the switching device to route the USB port to the Bridge. The Bridge processes the signals from the consumer device and provides them to the USB Hub, thereby rendering the consumer device compatible with the vehicle’s embedded USB Host. In the case where the consumer device is acting as USB Device, the USB Bridge controls the switching device such that the switching device provides the signals to the USB Hub, effectively bypassing the Bridge.

EX1003 at 4:45-54.

-228 Pet. (Paper 1), 12-16, 41.

DEMONSTRATIVE EXHIBIT — NOT EVIDENCE

’420 Patent, Fig. 4

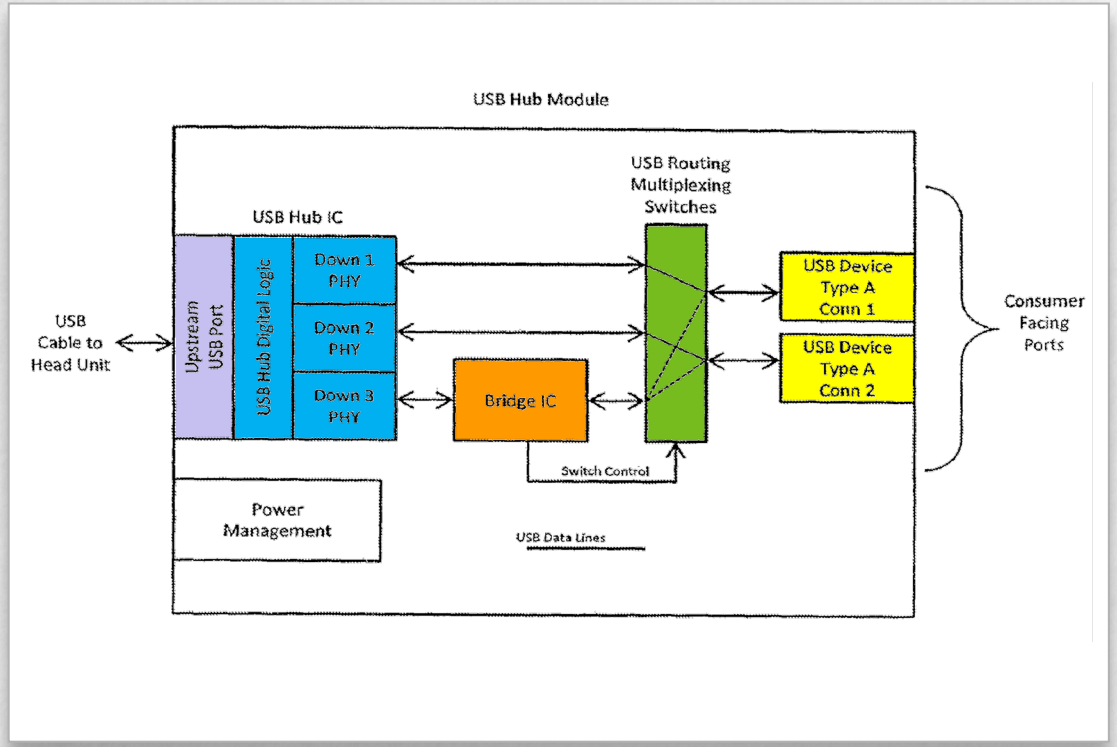

In use, the Head Unit controls the switching device via the USB Bridge hardware or any other convenient means of control. The HU software application may choose to enable,

EX1003 at 6:19-21.

switching device. The USB Bridge is configured, based on signals from the Head Unit, whether the consumer device which is connected to the USB port is acting as USB Host or USB Device. In the case where the consumer device is

EX1003 at 4:42-45.

-228 Pet. (Paper 1), 12-16, 41.

DEMONSTRATIVE EXHIBIT — NOT EVIDENCE

’420 Patent, Fig. 4

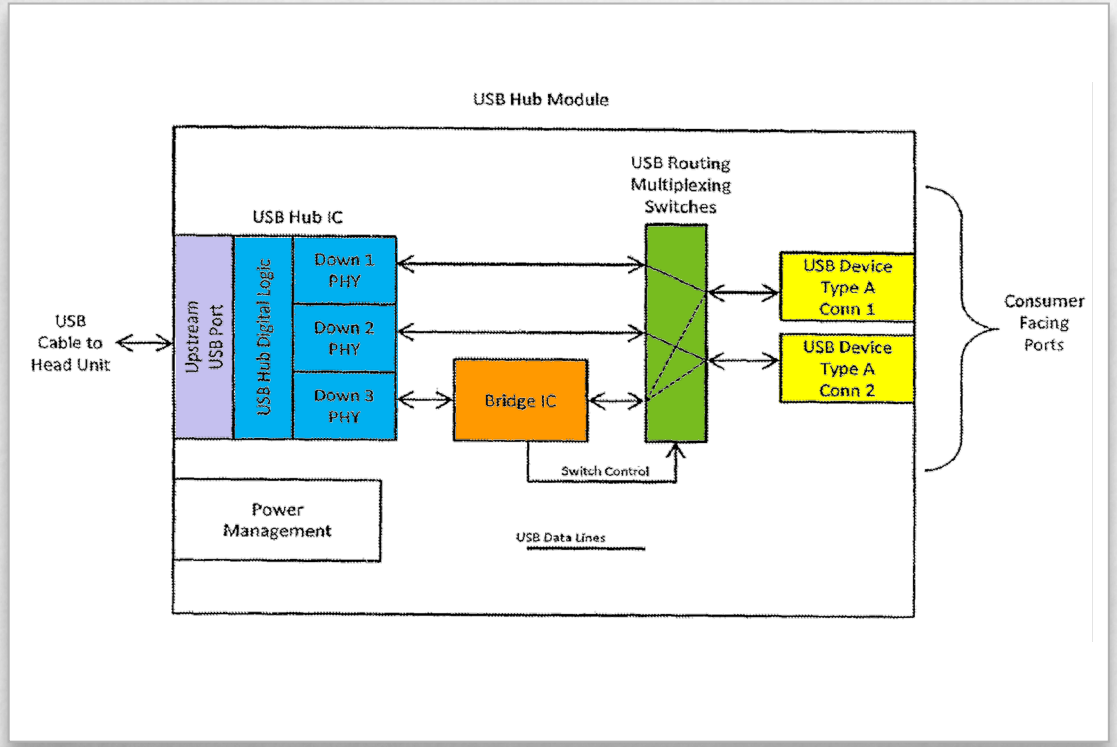

Unit. The architecture illustrated is capable of handling both the operation and data paths associated with the Bridge and the Hub at the same time, thus allowing concurrent operation of consumer devices operating in USB Device mode with consumer devices operating in USB Host mode. In one

EX1003 at 8:59-62.

-228 Pet. (Paper 1), 12-16, 41.

DEMONSTRATIVE EXHIBIT — NOT EVIDENCE

’420 Patent, Fig. 4

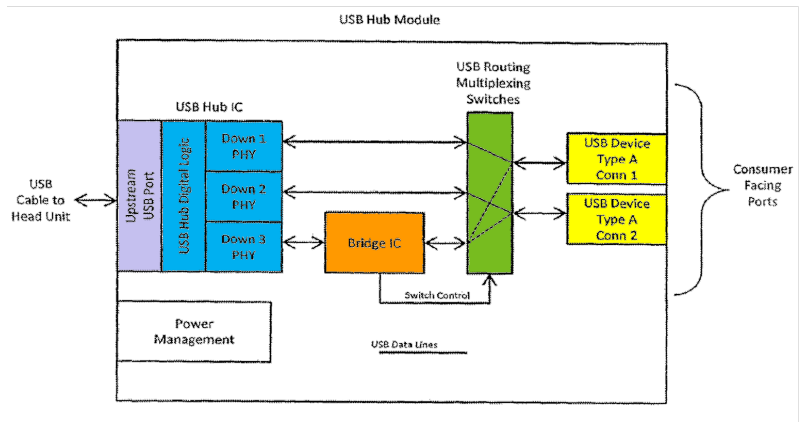

’420 Patent, Claim 15

15. A Universal Serial Bus (USB) connectivity module, comprising:

a first USB port:

a second USB port;

a USB host-to-host bridge connected to said first USB port;

a USB routing switch connected to said first USB port, said second USB port and said USB host-to-host bridge, wherein said USB routing switch is configured to provide a communication link between said first USB port and said second USB port through said USB host-to-host bridge, thereby providing bidirectional initiation of communication between the USB host and the consumer device when a first consumer device connected to said second USB port is operating in a USB host mode and wherein said USB routing switch is configured to provide another communication link between said first USB port and said second USB port that bypasses said USB host-to-host bridge, thereby only responding to communication initiated by the USB host when the first consumer device connected to said second USB port is operating in a USB device mode.

’420 Patent, Claim 17

17. The USB connectivity module according to claim 15, further comprising a third USB port, wherein said USB routing switch is further connected to the third USB port, wherein said USB routing switch is configured to provide a first communication link between said first USB port and said second USB port through said USB host-to-host bridge, thereby providing bidirectional initiation of communication between the USB host and the consumer device when the first consumer device connected to said second USB port is operating in the USB host mode, and wherein said USB routing Switch is configured to provide a second communication link between said first USB port and said third USB port that bypasses said USB host-to-host bridge, thereby only responding to communication initiated by the USB host when a second consumer device connected to said third USB port is operating in the USB device mode without interrupting the first communication link between said first USB port and said second USB port.

-228 Pet. (Paper 1), 41, 74-78, 80-83.

DEMONSTRATIVE EXHIBIT — NOT EVIDENCE

’420 Patent, Fig. 4

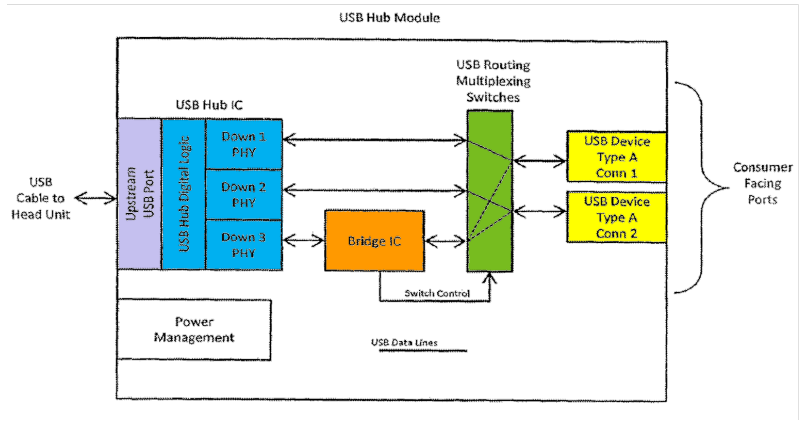

’420 Patent, Claim 18

18. A communication system, comprising:

a USB hub including a first USB port and a second USB port;

a central vehicle microcontroller connected to said first USB port:

a first consumer device connected to said second USB port;

a USB host-to-host bridge connected to said first USB port;

a USB routing switch providing a first communication path between said second USB port and said USB host-to-host bridge and a second communication path between said second USB port and said first USB port that bypasses said USB host-to-host bridge, wherein said USB routing Switch connects said first communication path when the first consumer device is connected to said second USB port and is operating in a USB host mode, thereby providing bidirectional initiation of communication between the USB host and the consumer device and wherein said USB routing switch connects said second communication path, thereby only responding to communication initiated by the USB host when the first consumer device is connected to said second USB port and is operating in a USB device mode.

’420 Patent, Claim 19

19. The communication system according to claim 18, further comprising a second consumer device, wherein the USB hub includes a third USB port and wherein the USB routing Switch further connects a third communication path between said third USB port and said first USB port that bypasses said USB host-to-host bridge, thereby only responding to communication initiated by the USB Host when the second consumer device is connected to said third USB port and is operating in the USB device mode.

’420 Patent, Claim 20

20. The communication system according to claim 19, wherein said USB routing Switch is configured to simultaneously provide the second communication path between said first USB port and said third USB port without interrupting the first communication path between said first USB port and said second USB port.

-228 Pet. (Paper 1), 48, 71-87.

DEMONSTRATIVE EXHIBIT — NOT EVIDENCE

’962 Patent, Fig. 4

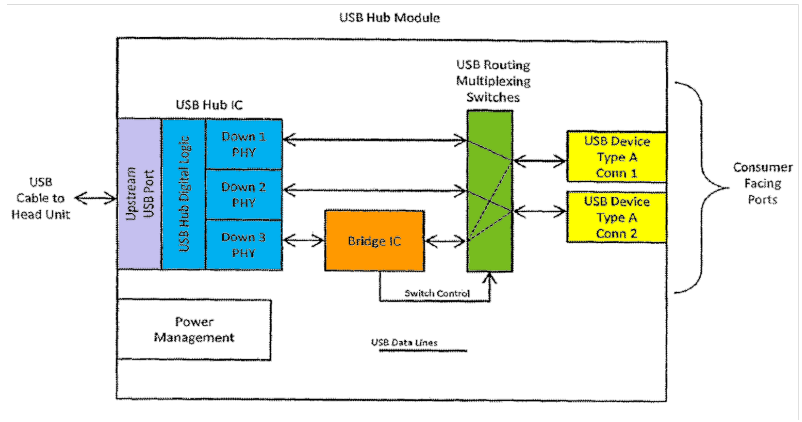

’962 Patent, Claim 1

1. A Universal Serial Bus (USB) hub module, comprising:

an upstream USB port;

a plurality of downstream USB ports:

a USB hub interconnected to the upstream USB port and the plurality of downstream USB ports, said USB hub configured to broadcast data from the upstream USB port to each downstream USB port and to transmit data from each downstream USB port to the upstream USB port;

a USB bridge interconnected to the USB hub and configured to connect the upstream USB port to a USB host; and

a USB routing switch interconnected to the USB bridge, the USB hub, and the plurality of downstream USB ports, wherein the USB routing switch is configured to connect a first downstream USB port of the plurality of downstream USB ports to the upstream USB port through the USB bridge when a consumer device connected to the first downstream USB port is the USB host and is configured to initiate bidirectional communication with the upstream USB port, and wherein the USB routing switch is configured to connect the first downstream USB port directly to the USB hub when the consumer device connected to the first downstream USB port is configured to only respond to communication from the upstream USB port, thereby rendering the consumer device compatible with a device connected to the upstream USB port.

’962 Patent, Claim 2

2. The USB hub module according to claim 1, wherein the USB routing switch is configured to connect the first downstream USB port to the USB hub through the USB bridge when a first consumer device connected to the first downstream USB port is acting as the USB host, and wherein the USB routing switch is configured to simultaneously connect a second downstream USB port of the plurality of downstream USB ports directly to the USB hub when a second consumer device connected to the second downstream USB port is acting as a USB device, thereby rendering the first and second consumer devices compatible to communicate simultaneously with the upstream USB port.

-228 Pet. (Paper 1), 46-70.

DEMONSTRATIVE EXHIBIT — NOT EVIDENCE

’420 Patent, Fig. 4

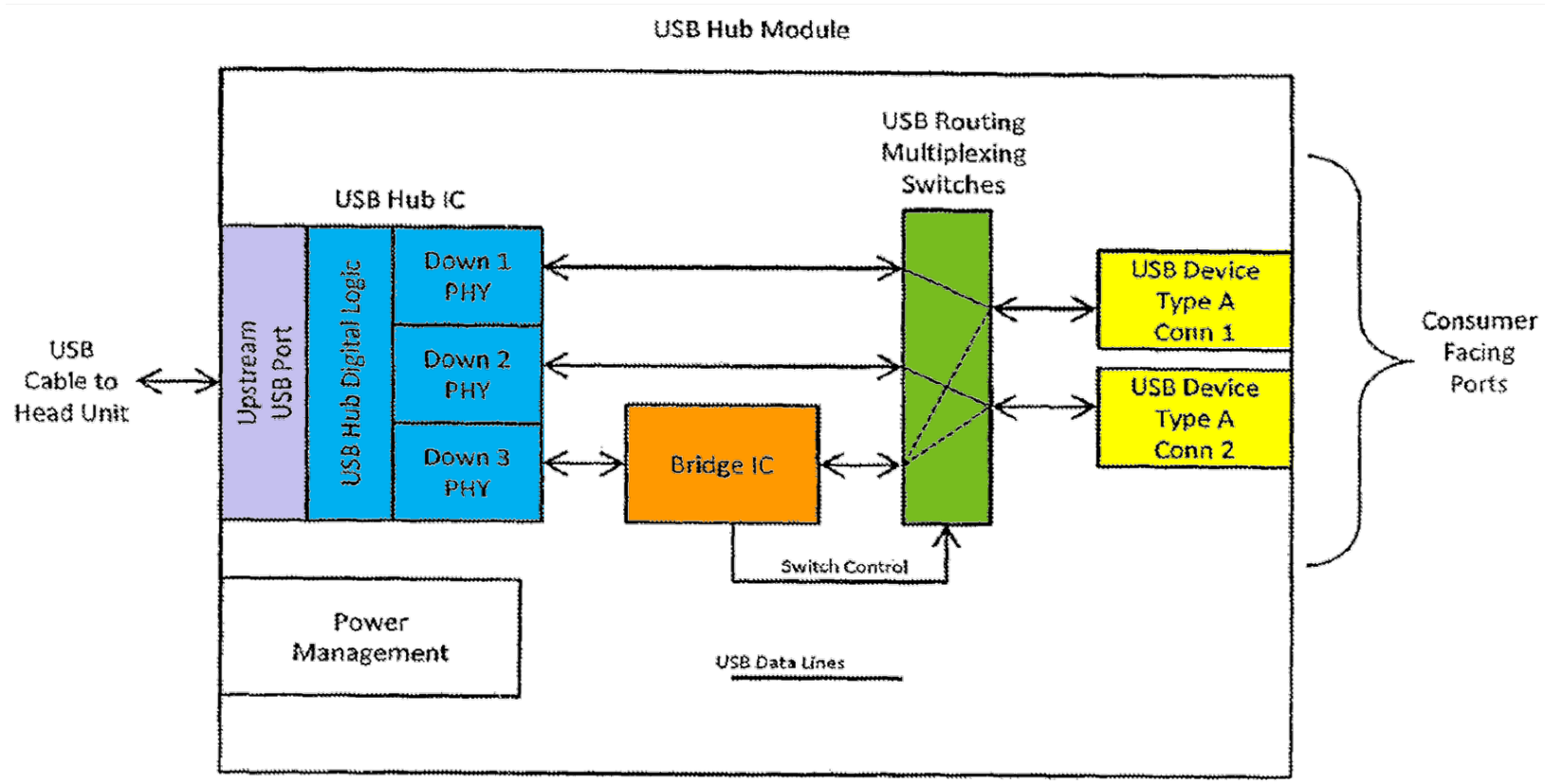

-228 Pet. (Paper 1). 41.

DEMONSTRATIVE EXHIBIT — NOT EVIDENCE

Chang
Fig. 3

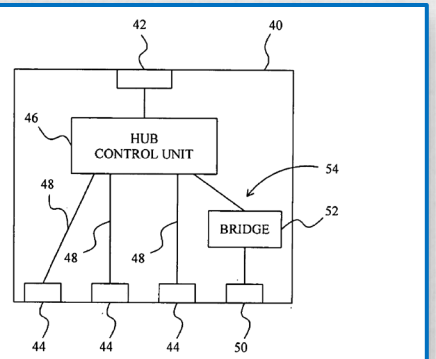

Chang II
Fig. 3

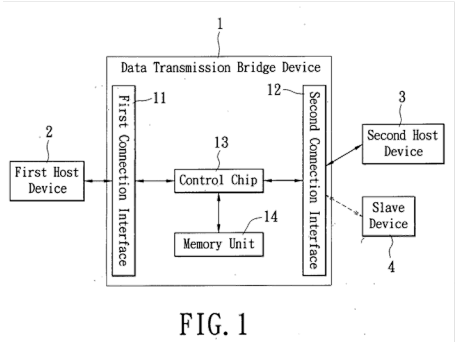

FIG. 1

Microchip's Proposed Combination

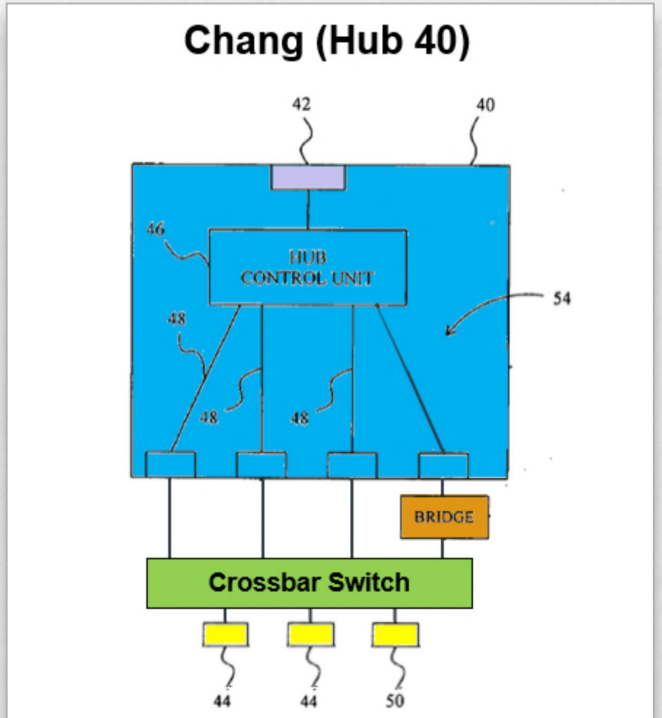

IN THE UNITED STATES PATENT AND TRADEMARK OFFICE

BEFORE THE PATENT TRIAL AND APPEAL BOARD

MICROCHIP TECHNOLOGY INC.,
Petitioner,

v.

APTIV TECHNOLOGIES AG AND APTIV TECHNOLOGIES LIMITED,
Patent Owners.

1. Motivation to Combine

As §VI.A demonstrates, Chang discloses a hub with dedicated downstream device ports (for host-device connections) and a dedicated downstream host port (for a host-host connection through a bridge). It would have been obvious to modify Chang in view of Chang II and a POSITA's knowledge to include dual-role port(s) and a switch to route the ports to the appropriate transmission path. Welch, ¶¶175-202.

-228 Pet. (Paper 1), 33-45.

DEMONSTRATIVE EXHIBIT — NOT EVIDENCE

Eric Welch
Petitioner's Expert

Q. Okay. So the Chang reference that is the primary reference in each of your opinions on obviousness was provided to you by counsel, correct?

A. Among other things, yeah, that's right.

EX2021 at 53:22-25.

-228 POR (Paper 25), 52-53.

DEMONSTRATIVE EXHIBIT — NOT EVIDENCE

Eric Welch
Petitioner's Expert

Q. Okay. And I -- my next question, and it's good you have the exhibit listing in front of you because I'm going to ask what those other things that were provided to you by counsel were. Turning to Exhibit 1015 is the Chang 2 reference. Was that provided to you by counsel?

A. It was.

EX2021 at 54:3-9.

-228 POR (Paper 25), 52-53.

Eric Welch
Petitioner's Expert

Q. Okay. Prior to your retention in this case in May of 2023, do you ever recall having seen the Chang reference, Exhibit 1014 -

A. No.

Q. -- or the Chang 2 reference, Exhibit -

A. I don't -- I don't remember seeing either of those.

EX2021 at 54:23-55:4.

-228 POR (Paper 25), 52-53.

DEMONSTRATIVE EXHIBIT — NOT EVIDENCE

Eric Welch
Petitioner's Expert

Q. Okay. And so after looking at the claims of the four patents we're dealing with, you then looked at the Chang 1 and Chang 2 references -

A. Mm-hmm.

Q. -- that you've been provided?

A. Mm-hmm.

EX2021 at 65:8-13.

-228 POR (Paper 25), 52-53.

Eric Welch
Petitioner's Expert

Q. Okay. And so your analysis started with the claims of the patents and then you took it from there?

A. That's correct.

EX2021 at 10:2-4.

-228 POR (Paper 25), 52-53.

DEMONSTRATIVE EXHIBIT — NOT EVIDENCE

IN THE UNITED STATES PATENT AND TRADEMARK OFFICE

BEFORE THE PATENT TRIAL AND APPEAL BOARD

MICROCHIP TECHNOLOGY INC.,
Petitioner,

v.

APTIV TECHNOLOGIES AG AND APTIV TECHNOLOGIES LIMITED,
Patent Owners.

Case No. IPR2024-00228
U.S. Patent No. 9,619,420

PETITION FOR *INTER PARTES* REVIEW OF U.S. PATENT NO. 9,619,420

’420 Patent

Figure 4

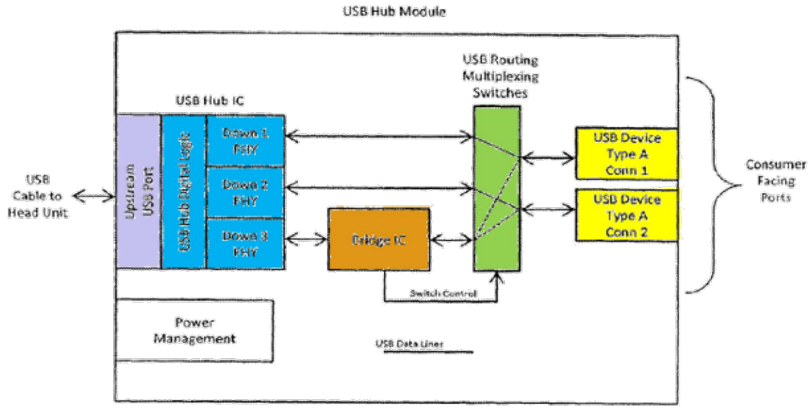

2. Claim 1

For reference, annotated figures mapping claim 1 to each modified Crossbar Implementation are below.

Chang (Hub 46)

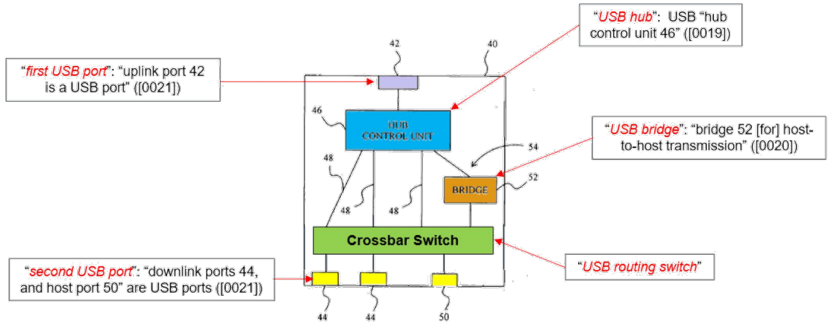

DEMONSTRATIVE EXHIBIT — NOT EVIDENCE

Chang

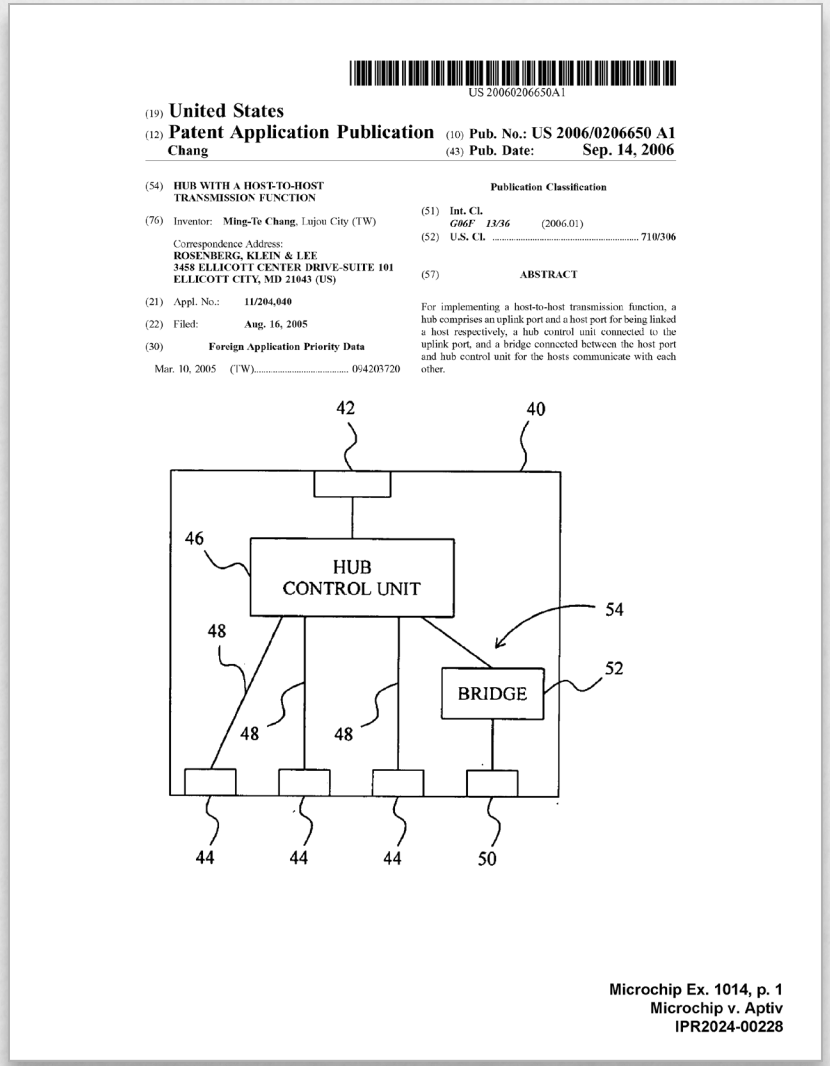

US 20060206650A1

(19) **United States**

(12) **Patent Application Publication**

Chang

(10) **Pub. No.: US 2006/0206650 A1**

(43) **Pub. Date: Sep. 14, 2006**

(54) **HUB WITH A HOST-TO-HOST TRANSMISSION FUNCTION**

(76) Inventor: **Ming-Te Chang**, Lujou City (TW)

Correspondence Address:
ROSENBERG, KLEIN & LEE
3458 ELLICOTT CENTER DRIVE-SUITE 101
ELLICOTT CITY, MD 21043 (US)

(21) Appl. No.: **11/204,040**

(22) Filed: **Aug. 16, 2005**

(30) **Foreign Application Priority Data**

Mar. 10, 2005 (TW) 094203720

Publication Classification

(51) **Int. Cl.**
G06F 13/36 (2006.01)

(52) **U.S. Cl.** **710/306**

(57) **ABSTRACT**

For implementing a host-to-host transmission function, a hub comprises an uplink port and a host port for being linked a host respectively, a hub control unit connected to the uplink port, and a bridge connected between the host port and hub control unit for the hosts communicate with each other.

Microchip Ex. 1014, p. 1
Microchip v. Aptiv
IPR2024-00228

- 2006 Publication Date
- Abandoned Application

Chang

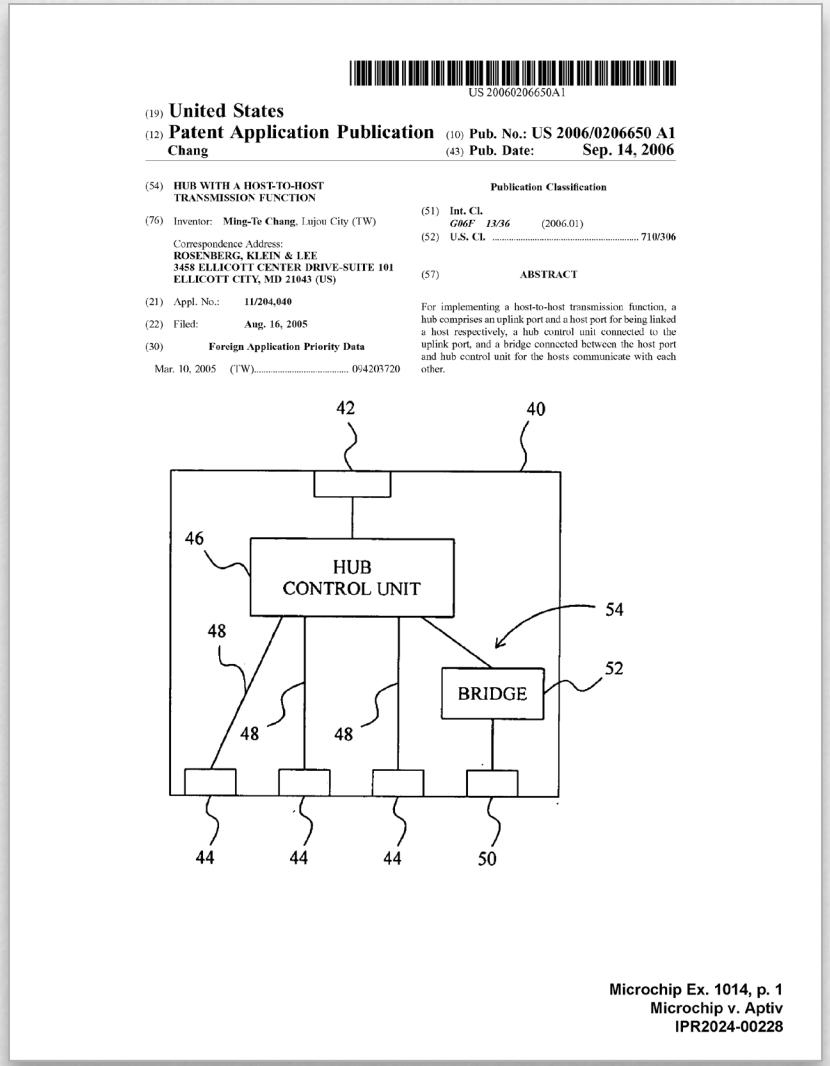

US 20060206650A1

(19) United States
(12) Patent Application Publication
Chang
(10) Pub. No.: US 2006/0206650 A1
(43) Pub. Date: Sep. 14, 2006

(54) HUB WITH A HOST-TO-HOST TRANSMISSION FUNCTION

(76) Inventor: Ming-Te Chang, Lujou City (TW)

Correspondence Address:
ROSENBERG, KLEIN & LEE
3458 ELLICOTT CENTER DRIVE-SUITE 101
ELLICOTT CITY, MD 21043 (US)

(21) Appl. No.: 11/204,040

(22) Filed: Aug. 16, 2005

(30) Foreign Application Priority Data

Mar. 10, 2005 (TW) 094203720

Publication Classification

(51) Int. Cl.
G06F 13/36 (2006.01)

(52) U.S. Cl. 710/306

(57) ABSTRACT

For implementing a host-to-host transmission function, a hub comprises an uplink port and a host port for being linked a host respectively, a hub control unit connected to the uplink port, and a bridge connected between the host port and hub control unit for the hosts communicate with each other.

Microchip Ex. 1014, p. 1
Microchip v. Aptiv
IPR2024-00228

[0002] In order to establish a communication channel between two computers, conventionally, a local area network (LAN) is employed to link the two computers, which is much inconvent for users. Currently, a USB 2.0 host-to-host transmission cable enables to establish a communication channel between two computers simpler and more efficient. USB 2.0 has a high-speed transmission rate up to 480 Mb/s, and is therefore suitable for large volumes of data transmission, which is very convenient for a computer user who needs to exchange a large amount of data. However, using a USB transmission cable inevitably occupies a USB port on the computer, and the user must prepare the USB host-to-host transmission cable in advance, both still causing inconvenience to the user.

EX1014 at [0002]

-228 POR (Paper 25), 25-27, 34.

DEMONSTRATIVE EXHIBIT — NOT EVIDENCE

Chang

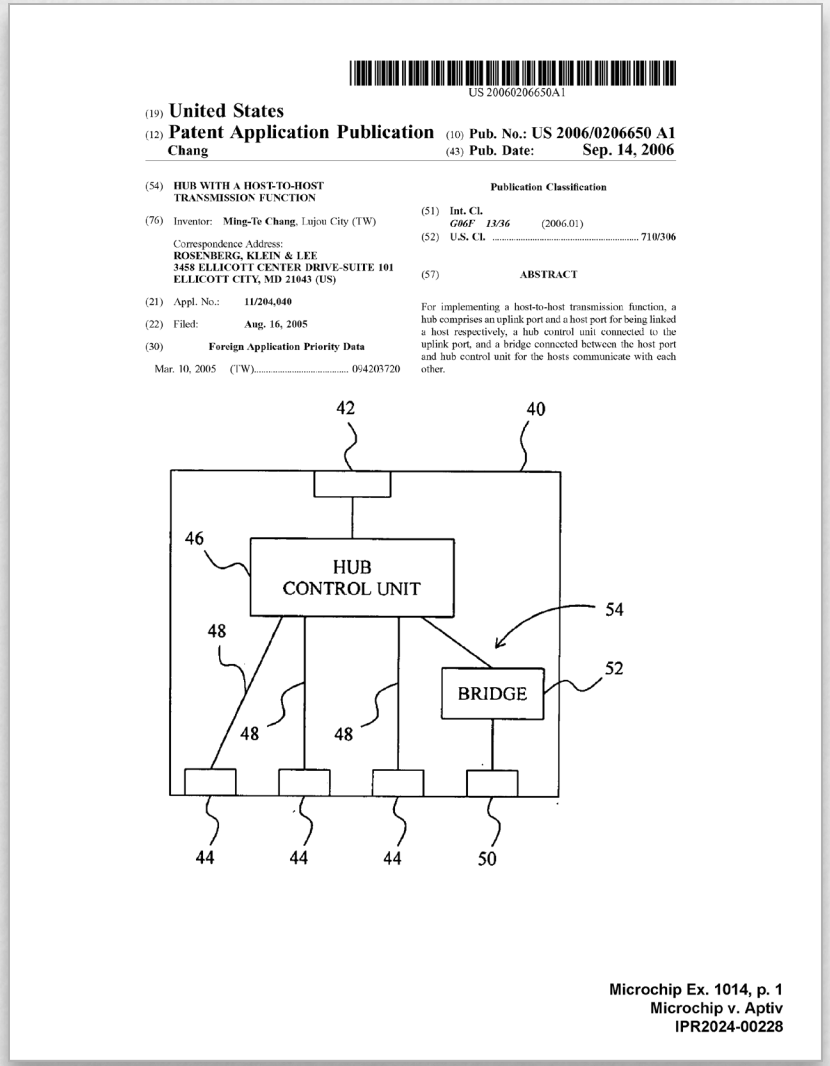

US 20060206650A1

(19) United States
(12) Patent Application Publication
Chang

(10) Pub. No.: US 2006/0206650 A1
(43) Pub. Date: Sep. 14, 2006

(54) HUB WITH A HOST-TO-HOST TRANSMISSION FUNCTION

(76) Inventor: Ming-Te Chang, Lujou City (TW)

Correspondence Address:
ROSENBERG, KLEIN & LEE
3458 ELLICOTT CENTER DRIVE-SUITE 101
ELLICOTT CITY, MD 21043 (US)

(21) Appl. No.: 11/204,040

(22) Filed: Aug. 16, 2005

(30) Foreign Application Priority Data

Mar. 10, 2005 (TW) 094203720

Publication Classification

(51) Int. Cl.
G06F 13/36 (2006.01)

(52) U.S. Cl. 710/306

(57) ABSTRACT

For implementing a host-to-host transmission function, a hub comprises an uplink port and a host port for being linked a host respectively, a hub control unit connected to the uplink port, and a bridge connected between the host port and hub control unit for the hosts communicate with each other.

Microchip Ex. 1014, p. 1
Microchip v. Aptiv
IPR2024-00228

[0003] Therefore, it is desired a device capable of easily establishing a connection between a computer and another computer.

EX1014 at [0003]

[0025] USB hub has been a popular computer peripheral device, and thus any user of a USB hub according to the present invention will not occupy a USB port on another computer for communications therewith. The user even needs not to prepare a host-to-host transmission cable, and is not requested to setup a local area network for data exchange between the two host computers. It is a very simple and convenient way for host-to-host communications.

EX1014 at [0025]

-228 POR (Paper 25), 25-27, 34.

DEMONSTRATIVE EXHIBIT — NOT EVIDENCE

Chang

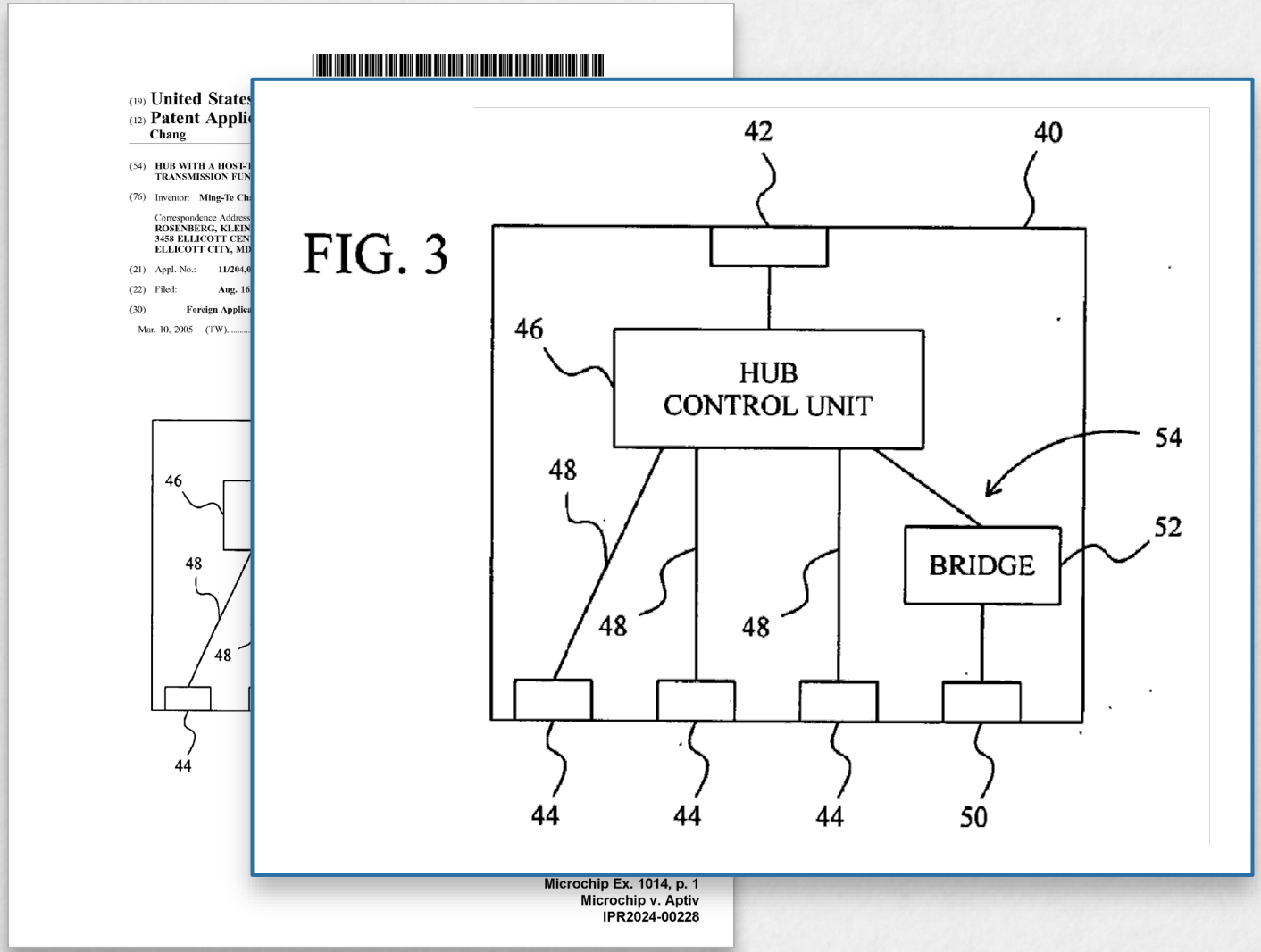

- Only One Host-to-Host Port
- No Dual-role Ports
- No Role Detection
- No Routing Logic or Hardware
- No Switching

-228 POR (Paper 25), 16-18, 57-61.

DEMONSTRATIVE EXHIBIT — NOT EVIDENCE

Chang II

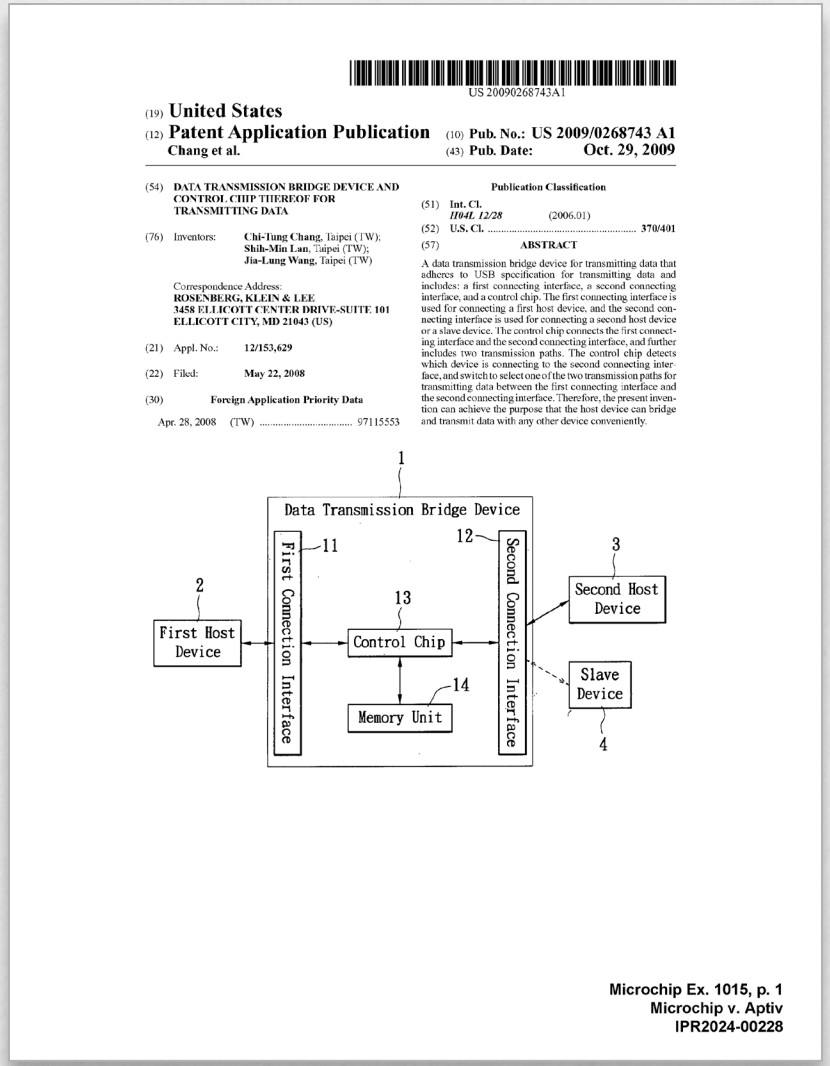

US 20090268743A1

(19) **United States**

(12) **Patent Application Publication**

Chang et al.

(10) **Pub. No.: US 2009/0268743 A1**

(43) **Pub. Date: Oct. 29, 2009**

(54) **DATA TRANSMISSION BRIDGE DEVICE AND CONTROL CHIP THEREOF FOR TRANSMITTING DATA**

(76) Inventors: **Chi-Tung Chang**, Taipei (TW); **Shih-Min Lan**, Taipei (TW); **Jia-Lung Wang**, Taipei (TW)

Correspondence Address:
ROSENBERG, KLEIN & LEE
3458 ELLICOTT CENTER DRIVE-SUITE 101
ELLICOTT CITY, MD 21043 (US)

(21) Appl. No.: **12/153,629**

(22) Filed: **May 22, 2008**

(30) **Foreign Application Priority Data**

Apr. 28, 2008 (TW) 97115553

Publication Classification

(51) **Int. Cl.**
H04L 12/28 (2006.01)

(52) **U.S. Cl.** **370/401**

(57) **ABSTRACT**

A data transmission bridge device for transmitting data that adheres to USB specification for transmitting data and includes: a first connecting interface, a second connecting interface, and a control chip. The first connecting interface is used for connecting a first host device, and the second connecting interface is used for connecting a second host device or a slave device. The control chip connects the first connecting interface and the second connecting interface, and further includes two transmission paths. The control chip detects which device is connecting to the second connecting interface, and switch to select one of the two transmission paths for transmitting data between the first connecting interface and the second connecting interface. Therefore, the present invention can achieve the purpose that the host device can bridge and transmit data with any other device conveniently.

Microchip Ex. 1015, p. 1
Microchip v. Aptiv
IPR2024-00228

- 2009 Publication Date
- Abandoned Application

Chang II

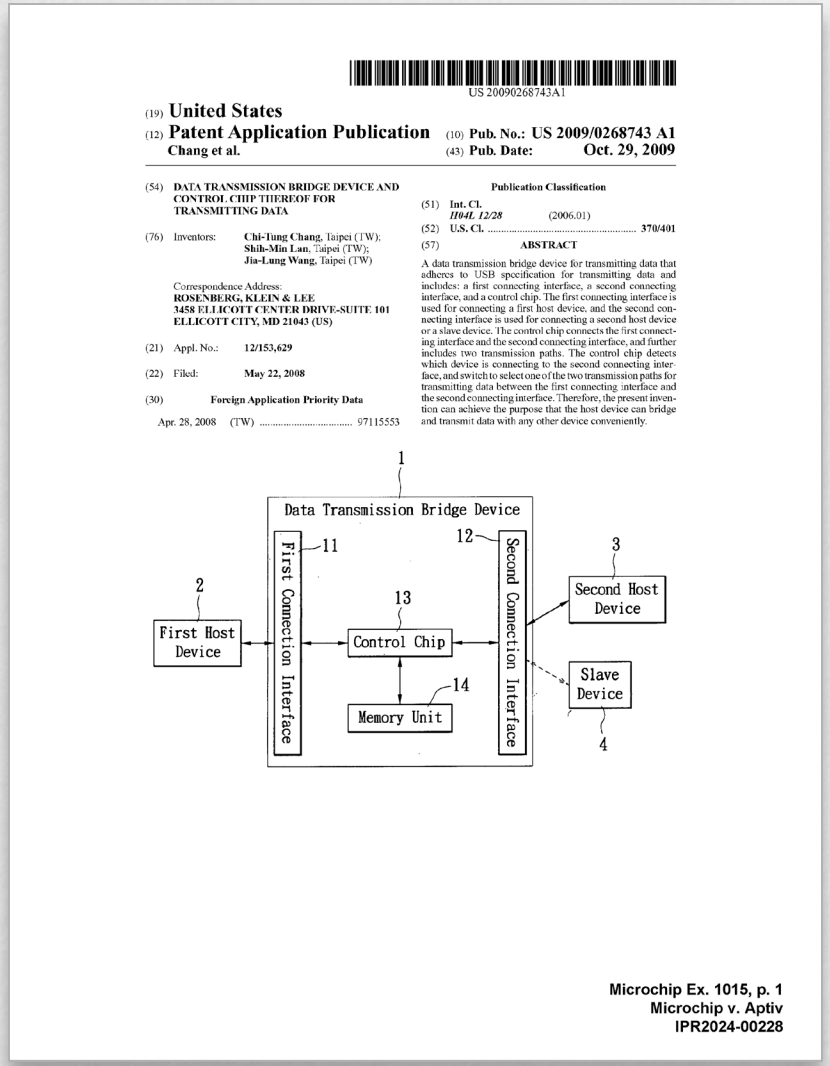

US 20090268743A1

(19) United States
(12) Patent Application Publication
Chang et al.
(10) Pub. No.: US 2009/0268743 A1
(43) Pub. Date: Oct. 29, 2009

(54) DATA TRANSMISSION BRIDGE DEVICE AND CONTROL CHIP THEREOF FOR TRANSMITTING DATA

(76) Inventors: Chi-Tung Chang, Taipei (TW); Shih-Min Lan, Taipei (TW); Jia-Lung Wang, Taipei (TW)

Correspondence Address:
ROSENBERG, KLEIN & LEE
3458 ELLICOTT CENTER DRIVE-SUITE 101
ELLICOTT CITY, MD 21043 (US)

(21) Appl. No.: 12/153,629

(22) Filed: May 22, 2008

(30) Foreign Application Priority Data

Apr. 28, 2008 (TW) 97115553

Publication Classification

(51) Int. Cl.
H04L 12/28 (2006.01)

(52) U.S. Cl. 370/401

(57) ABSTRACT

A data transmission bridge device for transmitting data that adheres to USB specification for transmitting data and includes: a first connecting interface, a second connecting interface, and a control chip. The first connecting interface is used for connecting a first host device, and the second connecting interface is used for connecting a second host device or a slave device. The control chip connects the first connecting interface and the second connecting interface, and further includes two transmission paths. The control chip detects which device is connecting to the second connecting interface, and switch to select one of the two transmission paths for transmitting data between the first connecting interface and the second connecting interface. Therefore, the present invention can achieve the purpose that the host device can bridge and transmit data with any other device conveniently.

Microchip Ex. 1015, p. 1
Microchip v. Aptiv
IPR2024-00228

[0002] The present invention is related to a bridge device for transmitting data; and more particular to a data transmission bridge device and control chip thereof for transmitting data that adopts USB specification, and can utilize switching to bridge between two host devices for transmitting data.

EX1015 at [0002]

-228 POR (Paper 25), 26-32.

DEMONSTRATIVE EXHIBIT — NOT EVIDENCE

Chang II

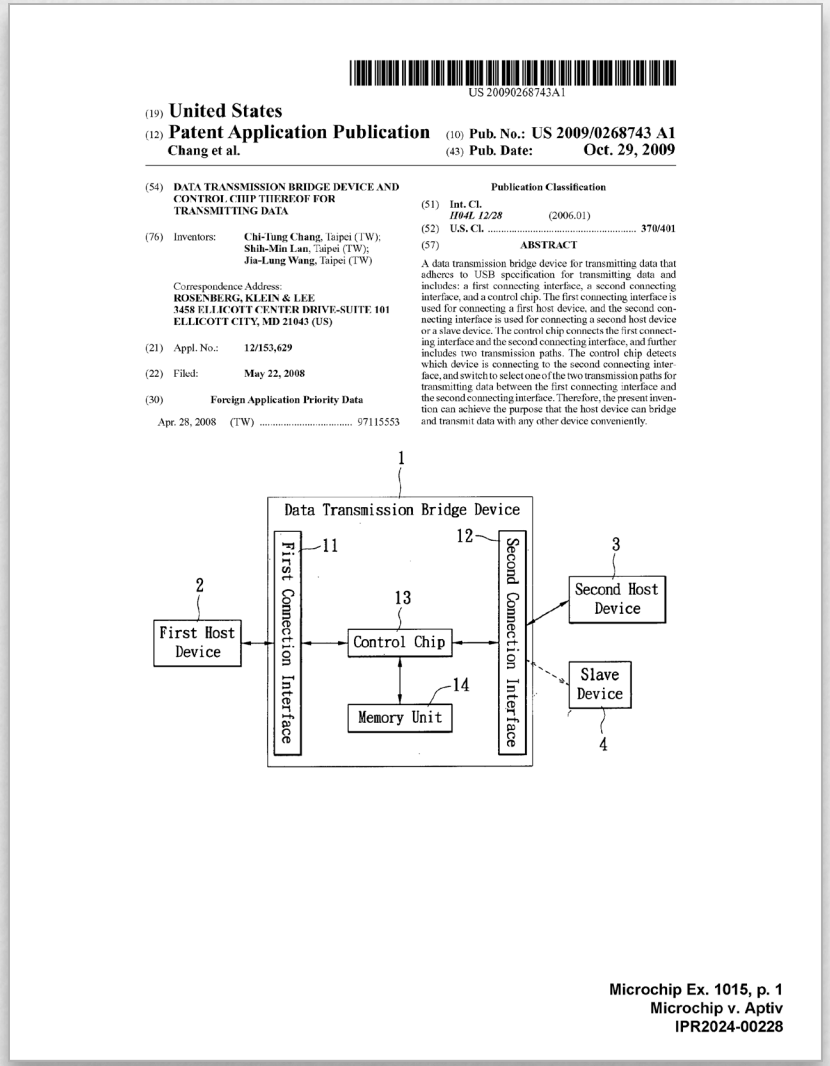

US 20090268743A1

(19) United States
(12) Patent Application Publication
Chang et al.
(10) Pub. No.: US 2009/0268743 A1
(43) Pub. Date: Oct. 29, 2009

(54) DATA TRANSMISSION BRIDGE DEVICE AND CONTROL CHIP THEREOF FOR TRANSMITTING DATA

(76) Inventors: Chi-Tung Chang, Taipei (TW); Shih-Min Lan, Taipei (TW); Jia-Lung Wang, Taipei (TW)

Correspondence Address:
ROSENBERG, KLEIN & LEE
3458 ELLICOTT CENTER DRIVE-SUITE 101
ELLICOTT CITY, MD 21043 (US)

(21) Appl. No.: 12/153,629

(22) Filed: May 22, 2008

(30) Foreign Application Priority Data

Apr. 28, 2008 (TW) 97115553

Publication Classification

(51) Int. Cl.
H04L 12/28 (2006.01)

(52) U.S. Cl. 370/401

(57) ABSTRACT

A data transmission bridge device for transmitting data that adheres to USB specification for transmitting data and includes: a first connecting interface, a second connecting interface, and a control chip. The first connecting interface is used for connecting a first host device, and the second connecting interface is used for connecting a second host device or a slave device. The control chip connects the first connecting interface and the second connecting interface, and further includes two transmission paths. The control chip detects which device is connecting to the second connecting interface, and switch to select one of the two transmission paths for transmitting data between the first connecting interface and the second connecting interface. Therefore, the present invention can achieve the purpose that the host device can bridge and transmit data with any other device conveniently.

Microchip Ex. 1015, p. 1
Microchip v. Aptiv
IPR2024-00228

[0005] With the increase of data files, by direct relation, the transmission of data becomes a common user action. And in the field of long distance data transfer, the most common practice is through internet connection to achieve the objective of data transmission. On the other hand for short distance data transfer or for data transfer in close physical proximity between two computer hosts, not only can an area network be set up for transmitting data, but also the major methods listed below are available:

EX1015 at [0005]

-228 POR (Paper 25), 26-32.

DEMONSTRATIVE EXHIBIT — NOT EVIDENCE

Chang II

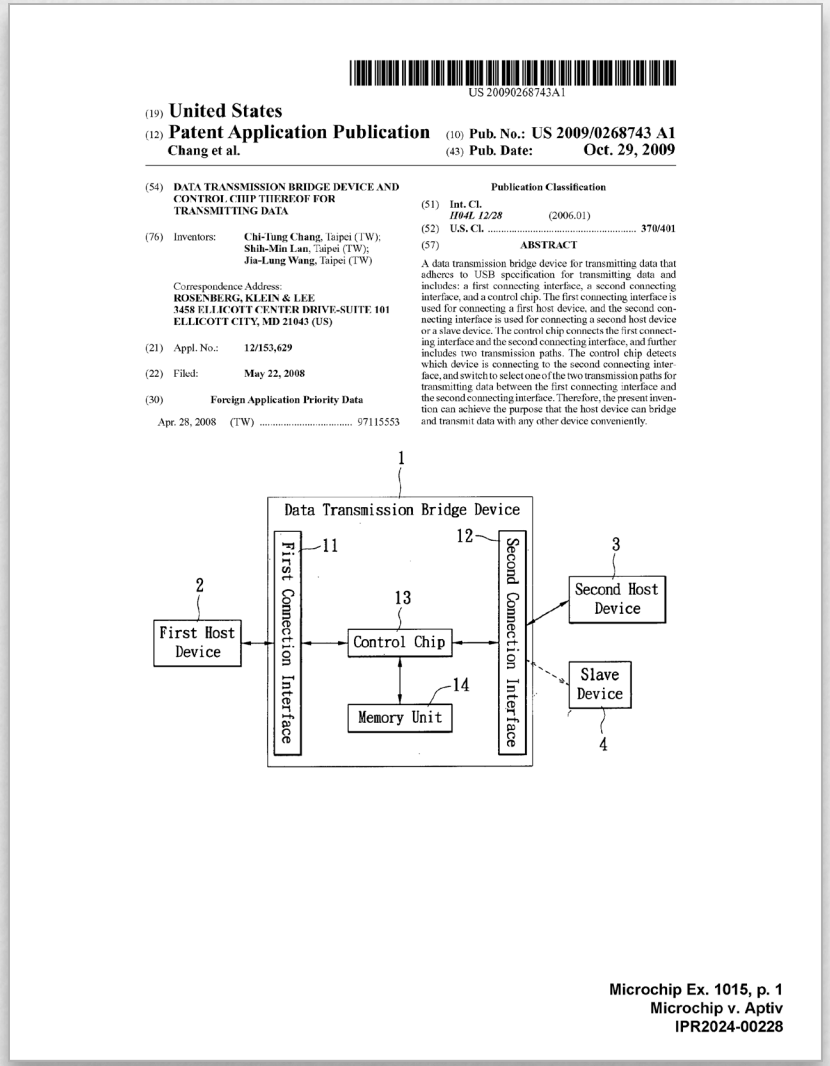

US 20090268743A1

(19) United States
(12) Patent Application Publication
Chang et al.
(10) Pub. No.: US 2009/0268743 A1
(43) Pub. Date: Oct. 29, 2009

(54) DATA TRANSMISSION BRIDGE DEVICE AND CONTROL CHIP THEREOF FOR TRANSMITTING DATA

(76) Inventors: Chi-Tung Chang, Taipei (TW); Shih-Min Lan, Taipei (TW); Jia-Lung Wang, Taipei (TW)

Correspondence Address:
ROSENBERG, KLEIN & LEE
3458 ELLICOTT CENTER DRIVE-SUITE 101
ELLICOTT CITY, MD 21043 (US)

(21) Appl. No.: 12/153,629

(22) Filed: May 22, 2008

(30) Foreign Application Priority Data

Apr. 28, 2008 (TW) 97115553

Publication Classification

(51) Int. Cl.
H04L 12/28 (2006.01)

(52) U.S. Cl. 370/401

(57) ABSTRACT

A data transmission bridge device for transmitting data that adheres to USB specification for transmitting data and includes: a first connecting interface, a second connecting interface, and a control chip. The first connecting interface is used for connecting a first host device, and the second connecting interface is used for connecting a second host device or a slave device. The control chip connects the first connecting interface and the second connecting interface, and further includes two transmission paths. The control chip detects which device is connecting to the second connecting interface, and switch to select one of the two transmission paths for transmitting data between the first connecting interface and the second connecting interface. Therefore, the present invention can achieve the purpose that the host device can bridge and transmit data with any other device conveniently.

Microchip Ex. 1015, p. 1
Microchip v. Aptiv
IPR2024-00228

[0006] 1) An internet cable jumper connection method to directly connect two computer hosts. However in this method, user must separately prepare and maintain an internet jumper connection cable.

EX1015 at [0006]

-228 POR (Paper 25), 26-32.

DEMONSTRATIVE EXHIBIT — NOT EVIDENCE

Chang II

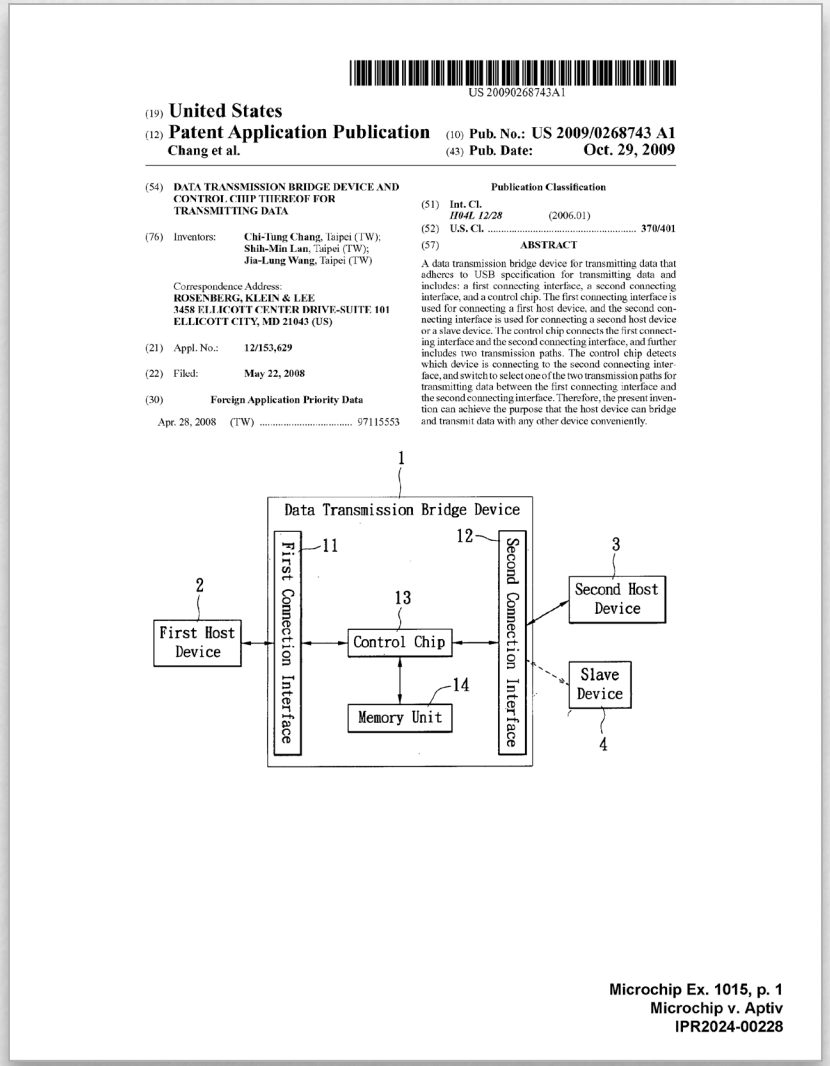

US 20090268743A1

(19) United States
(12) Patent Application Publication
Chang et al.
(10) Pub. No.: US 2009/0268743 A1
(43) Pub. Date: Oct. 29, 2009

(54) DATA TRANSMISSION BRIDGE DEVICE AND CONTROL CHIP THEREOF FOR TRANSMITTING DATA

(76) Inventors: Chi-Tung Chang, Taipei (TW); Shih-Min Lan, Taipei (TW); Jia-Lung Wang, Taipei (TW)

Correspondence Address:
ROSENBERG, KLEIN & LEE
3458 ELLICOTT CENTER DRIVE-SUITE 101
ELLICOTT CITY, MD 21043 (US)

(21) Appl. No.: 12/153,629

(22) Filed: May 22, 2008

(30) Foreign Application Priority Data

Apr. 28, 2008 (TW) 97115553

Publication Classification

(51) Int. Cl.
H04L 12/28 (2006.01)

(52) U.S. Cl. 370/401

(57) ABSTRACT

A data transmission bridge device for transmitting data that adheres to USB specification for transmitting data and includes: a first connecting interface, a second connecting interface, and a control chip. The first connecting interface is used for connecting a first host device, and the second connecting interface is used for connecting a second host device or a slave device. The control chip connects the first connecting interface and the second connecting interface, and further includes two transmission paths. The control chip detects which device is connecting to the second connecting interface, and switch to select one of the two transmission paths for transmitting data between the first connecting interface and the second connecting interface. Therefore, the present invention can achieve the purpose that the host device can bridge and transmit data with any other device conveniently.

Microchip Ex. 1015, p. 1
Microchip v. Aptiv
IPR2024-00228

[0007] 2) A short RF (radio frequency) method for transmission, for example: Bluetooth, infrared, etc. However in this method, both computer host must support and include RF transmission module, and must each establish confirmation settings, before data transfer can occur.

EX1015 at [0007]

-228 POR (Paper 25), 26-32.

DEMONSTRATIVE EXHIBIT — NOT EVIDENCE

Chang II

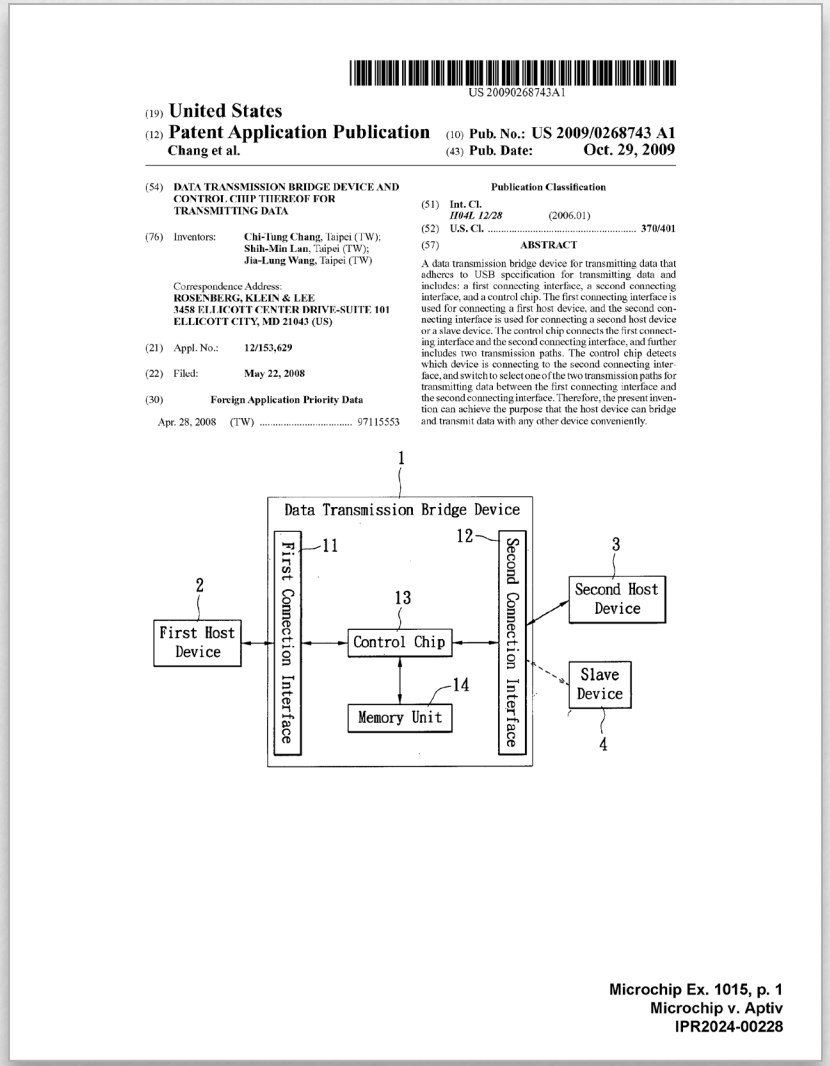

US 20090268743A1

(19) United States
(12) Patent Application Publication
Chang et al.
(10) Pub. No.: US 2009/0268743 A1
(43) Pub. Date: Oct. 29, 2009

(54) DATA TRANSMISSION BRIDGE DEVICE AND CONTROL CHIP THEREOF FOR TRANSMITTING DATA

(76) Inventors: Chi-Tung Chang, Taipei (TW); Shih-Min Lan, Taipei (TW); Jia-Lung Wang, Taipei (TW)

Correspondence Address:
ROSENBERG, KLEIN & LEE
3458 ELLICOTT CENTER DRIVE-SUITE 101
ELLICOTT CITY, MD 21043 (US)

(21) Appl. No.: 12/153,629

(22) Filed: May 22, 2008

(30) Foreign Application Priority Data

Apr. 28, 2008 (TW) 97115553

Publication Classification

(51) Int. Cl.
H04L 12/28 (2006.01)

(52) U.S. Cl. 370/401

(57) ABSTRACT

A data transmission bridge device for transmitting data that adheres to USB specification for transmitting data and includes: a first connecting interface, a second connecting interface, and a control chip. The first connecting interface is used for connecting a first host device, and the second connecting interface is used for connecting a second host device or a slave device. The control chip connects the first connecting interface and the second connecting interface, and further includes two transmission paths. The control chip detects which device is connecting to the second connecting interface, and switch to select one of the two transmission paths for transmitting data between the first connecting interface and the second connecting interface. Therefore, the present invention can achieve the purpose that the host device can bridge and transmit data with any other device conveniently.

Microchip Ex. 1015, p. 1
Microchip v. Aptiv
IPR2024-00228

[0008] 3) Through an external storage device, such as: thumb drive, portable hard drive, and similar device to indirectly facilitate data transfer between the two computer hosts. But this method has to be preformed separately on the two host computers and includes actions such as connecting external storage device to one computer host, copying file, detaching external storage device, connecting external storage device to another computer host, pasting file, and other various actions in order to complete data transfer, so that the data transfer efficiency is low.

EX1015 at [0008]

-228 POR (Paper 25), 26-32.

DEMONSTRATIVE EXHIBIT — NOT EVIDENCE

Chang II

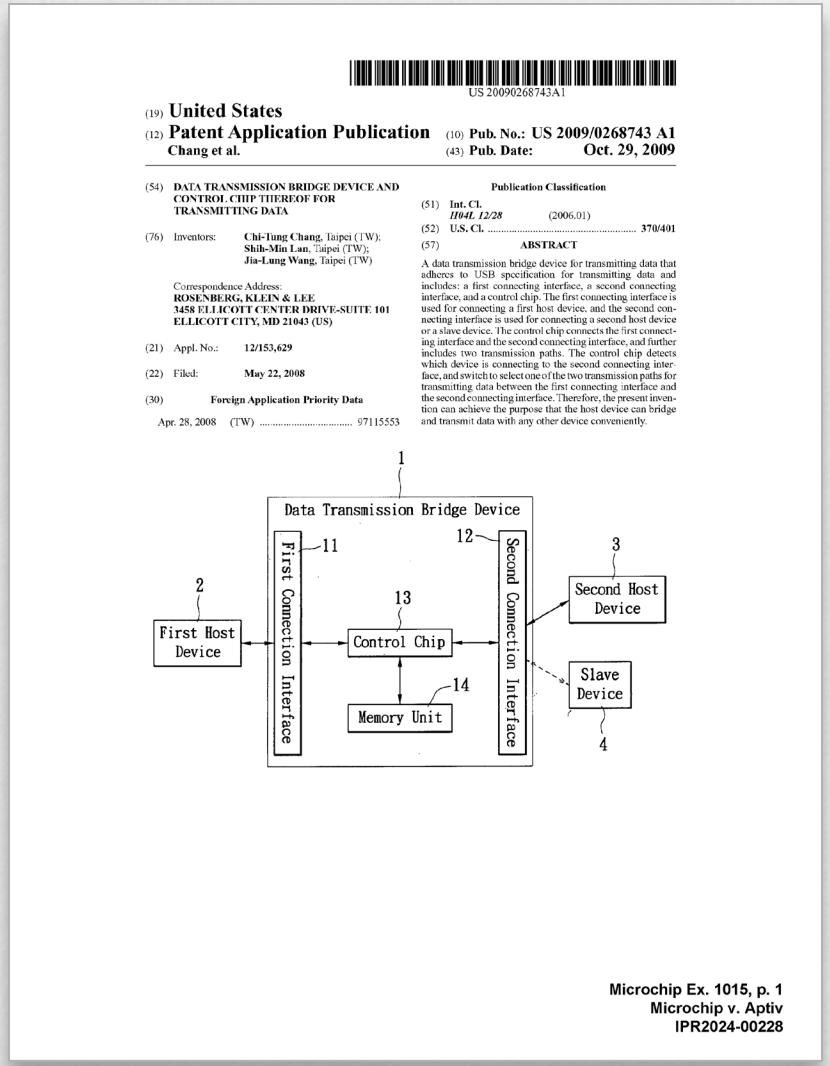

US 20090268743A1

(19) **United States**

(12) **Patent Application Publication**

Chang et al.

(10) **Pub. No.: US 2009/0268743 A1**

(43) **Pub. Date: Oct. 29, 2009**

(54) **DATA TRANSMISSION BRIDGE DEVICE AND CONTROL CHIP THEREOF FOR TRANSMITTING DATA**

(76) Inventors: **Chi-Tung Chang**, Taipei (TW); **Shih-Min Lan**, Taipei (TW); **Jia-Lung Wang**, Taipei (TW)

Correspondence Address:
ROSENBERG, KLEIN & LEE
3458 ELLICOTT CENTER DRIVE-SUITE 101
ELLICOTT CITY, MD 21043 (US)

(21) Appl. No.: **12/153,629**

(22) Filed: **May 22, 2008**

(30) **Foreign Application Priority Data**

Apr. 28, 2008 (TW) 97115553

Publication Classification

(51) **Int. Cl.**
H04L 12/28 (2006.01)

(52) **U.S. Cl.** **370/401**

(57) **ABSTRACT**

A data transmission bridge device for transmitting data that adheres to USB specification for transmitting data and includes: a first connecting interface, a second connecting interface, and a control chip. The first connecting interface is used for connecting a first host device, and the second connecting interface is used for connecting a second host device or a slave device. The control chip connects the first connecting interface and the second connecting interface, and further includes two transmission paths. The control chip detects which device is connecting to the second connecting interface, and switch to select one of the two transmission paths for transmitting data between the first connecting interface and the second connecting interface. Therefore, the present invention can achieve the purpose that the host device can bridge and transmit data with any other device conveniently.

Microchip Ex. 1015, p. 1
Microchip v. Aptiv
IPR2024-00228

[0010] Therefore, to design a bridge device for transmitting data unites the advantages of the above described transfer methods and avoids limitations, so that users can conveniently and efficiently proceed to transfer data between two computer host in short range. This is an area of research that is worth developing.

EX1015 at [0010]

-228 POR (Paper 25), 26-32.

DEMONSTRATIVE EXHIBIT — NOT EVIDENCE

Chang II

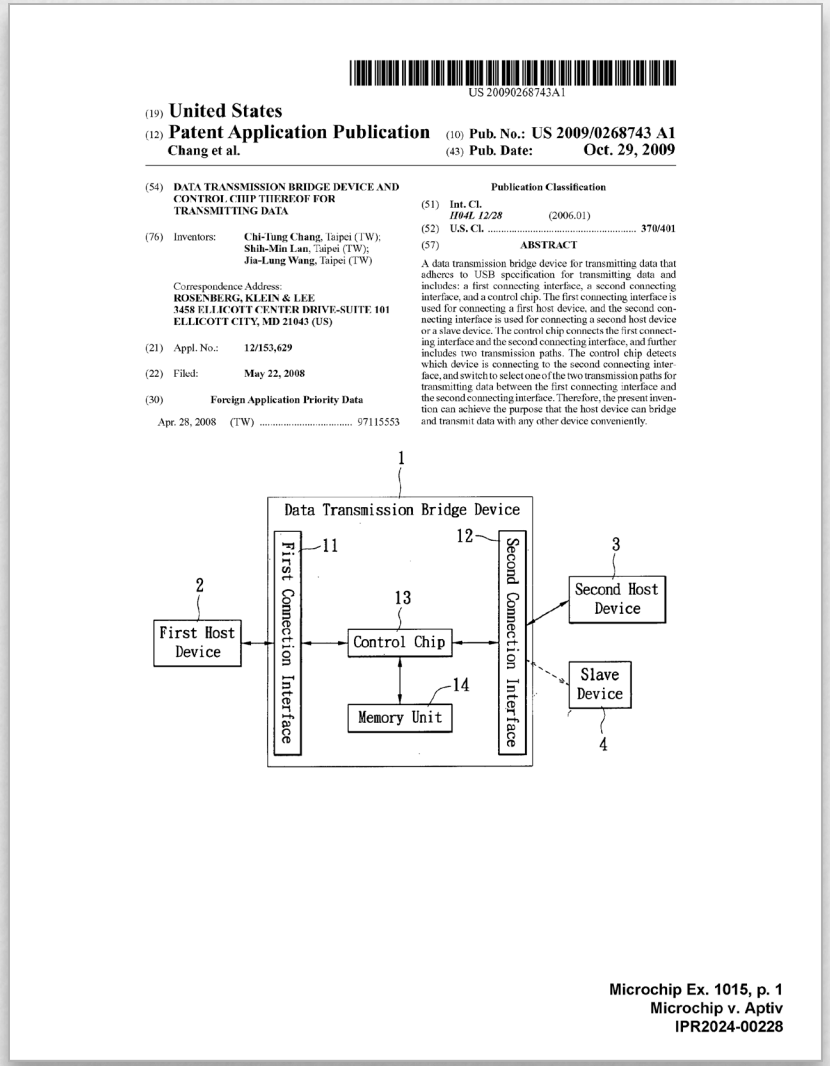

US 20090268743A1

(19) **United States**

(12) **Patent Application Publication**

Chang et al.

(10) **Pub. No.: US 2009/0268743 A1**

(43) **Pub. Date: Oct. 29, 2009**

(54) **DATA TRANSMISSION BRIDGE DEVICE AND CONTROL CHIP THEREOF FOR TRANSMITTING DATA**

(76) Inventors: **Chi-Tung Chang**, Taipei (TW); **Shih-Min Lan**, Taipei (TW); **Jia-Lung Wang**, Taipei (TW)

Correspondence Address:
ROSENBERG, KLEIN & LEE
3458 ELLICOTT CENTER DRIVE-SUITE 101
ELLICOTT CITY, MD 21043 (US)

(21) Appl. No.: **12/153,629**

(22) Filed: **May 22, 2008**

(30) **Foreign Application Priority Data**

Apr. 28, 2008 (TW) 97115553

Publication Classification

(51) **Int. Cl.**
H04L 12/28 (2006.01)

(52) **U.S. Cl.** **370/401**

(57) **ABSTRACT**

A data transmission bridge device for transmitting data that adheres to USB specification for transmitting data and includes: a first connecting interface, a second connecting interface, and a control chip. The first connecting interface is used for connecting a first host device, and the second connecting interface is used for connecting a second host device or a slave device. The control chip connects the first connecting interface and the second connecting interface, and further includes two transmission paths. The control chip detects which device is connecting to the second connecting interface, and switch to select one of the two transmission paths for transmitting data between the first connecting interface and the second connecting interface. Therefore, the present invention can achieve the purpose that the host device can bridge and transmit data with any other device conveniently.

Microchip Ex. 1015, p. 1
Microchip v. Aptiv
IPR2024-00228

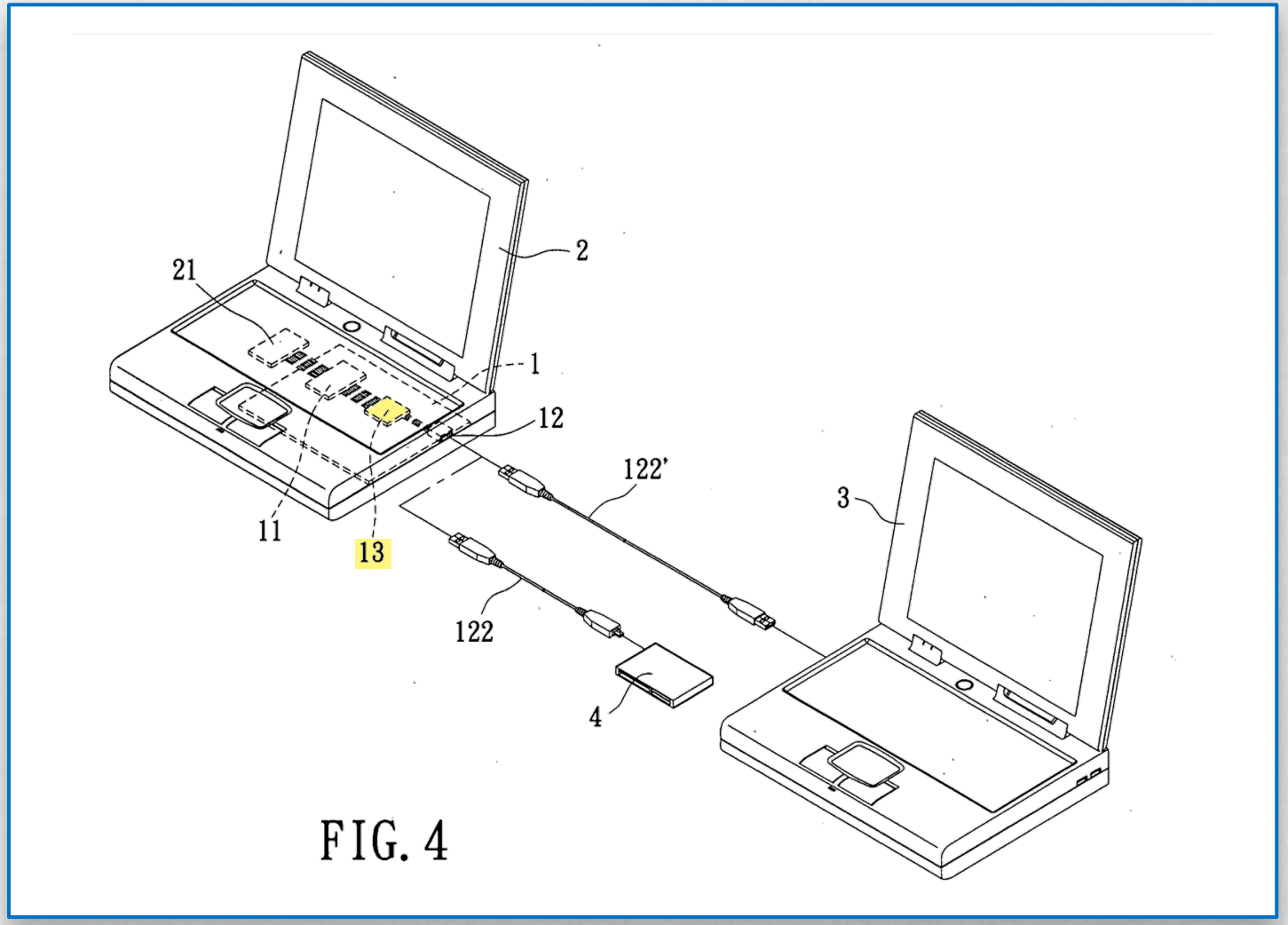

FIG. 4

EX1015 at Fig. 4

-228 POR (Paper 25), 26-32.

DEMONSTRATIVE EXHIBIT — NOT EVIDENCE

PODX40

Chang II

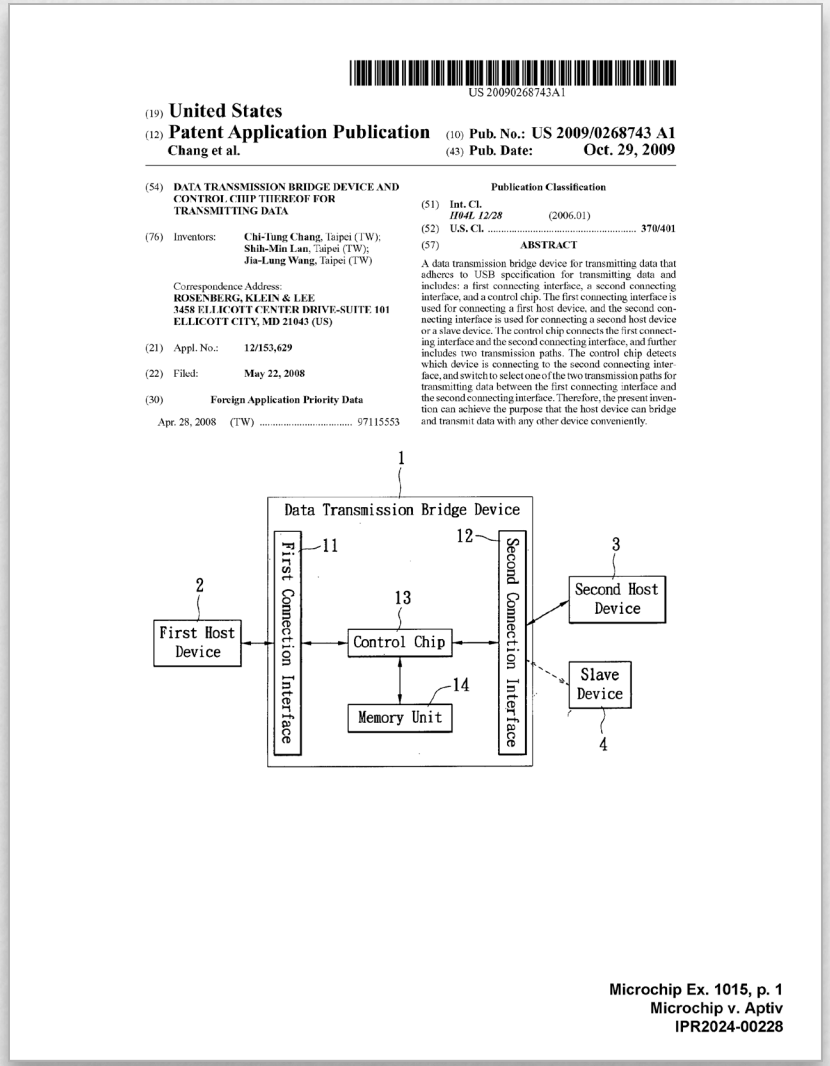

US 20090268743A1

(19) **United States**

(12) **Patent Application Publication**

Chang et al.

(10) **Pub. No.: US 2009/0268743 A1**

(43) **Pub. Date: Oct. 29, 2009**

(54) **DATA TRANSMISSION BRIDGE DEVICE AND CONTROL CHIP THEREOF FOR TRANSMITTING DATA**

(76) Inventors: **Chi-Tung Chang**, Taipei (TW); **Shih-Min Lan**, Taipei (TW); **Jia-Lung Wang**, Taipei (TW)

Correspondence Address:
ROSENBERG, KLEIN & LEE
3458 ELLICOTT CENTER DRIVE-SUITE 101
ELLICOTT CITY, MD 21043 (US)

(21) Appl. No.: **12/153,629**

(22) Filed: **May 22, 2008**

(30) **Foreign Application Priority Data**

Apr. 28, 2008 (TW) 97115553

Publication Classification

(51) **Int. Cl.**
H04L 12/28 (2006.01)

(52) **U.S. Cl.** **370/401**

(57) **ABSTRACT**

A data transmission bridge device for transmitting data that adheres to USB specification for transmitting data and includes: a first connecting interface, a second connecting interface, and a control chip. The first connecting interface is used for connecting a first host device, and the second connecting interface is used for connecting a second host device or a slave device. The control chip connects the first connecting interface and the second connecting interface, and further includes two transmission paths. The control chip detects which device is connecting to the second connecting interface, and switch to select one of the two transmission paths for transmitting data between the first connecting interface and the second connecting interface. Therefore, the present invention can achieve the purpose that the host device can bridge and transmit data with any other device conveniently.

Microchip Ex. 1015, p. 1
Microchip v. Aptiv
IPR2024-00228

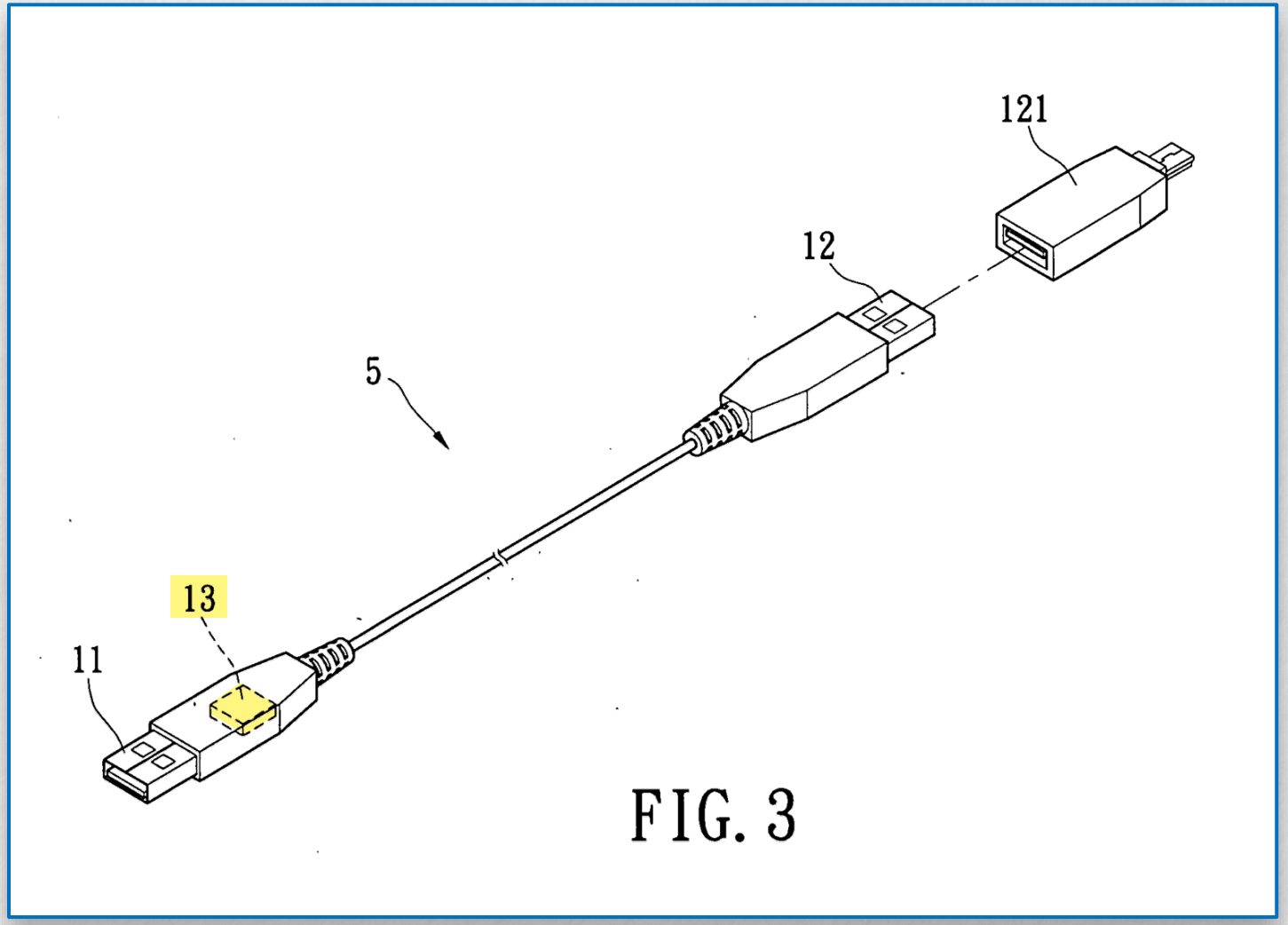

FIG. 3

EX1015 at Fig. 3

-228 POR (Paper 25), 26-32.

DEMONSTRATIVE EXHIBIT — NOT EVIDENCE

Chang II

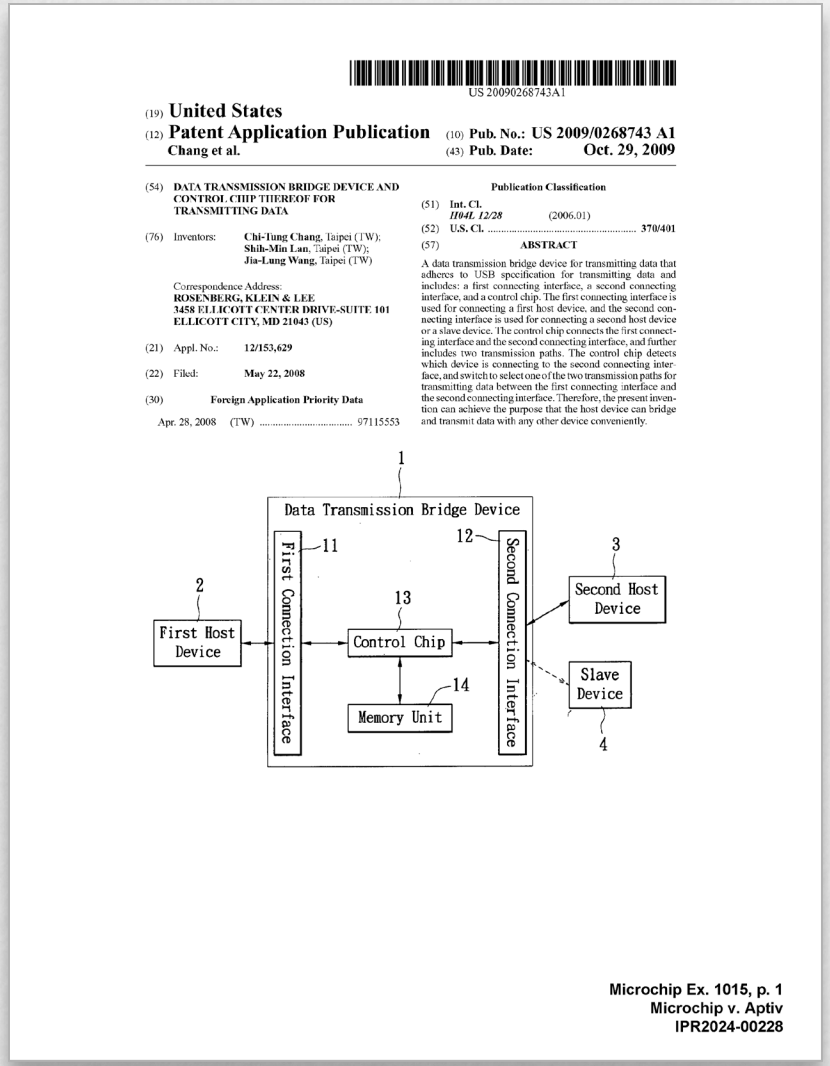

US 20090268743A1

(19) United States
(12) Patent Application Publication
Chang et al.
(10) Pub. No.: US 2009/0268743 A1
(43) Pub. Date: Oct. 29, 2009

(54) DATA TRANSMISSION BRIDGE DEVICE AND CONTROL CHIP THEREOF FOR TRANSMITTING DATA

(76) Inventors: Chi-Tung Chang, Taipei (TW); Shih-Min Lan, Taipei (TW); Jia-Lung Wang, Taipei (TW)

Correspondence Address:
ROSENBERG, KLEIN & LEE
3458 ELLICOTT CENTER DRIVE-SUITE 101
ELLICOTT CITY, MD 21043 (US)

(21) Appl. No.: 12/153,629

(22) Filed: May 22, 2008

(30) Foreign Application Priority Data

Apr. 28, 2008 (TW) 97115553

Publication Classification

(51) Int. Cl.
H04L 12/28 (2006.01)

(52) U.S. Cl. 370/401

(57) ABSTRACT

A data transmission bridge device for transmitting data that adheres to USB specification for transmitting data and includes: a first connecting interface, a second connecting interface, and a control chip. The first connecting interface is used for connecting a first host device, and the second connecting interface is used for connecting a second host device or a slave device. The control chip connects the first connecting interface and the second connecting interface, and further includes two transmission paths. The control chip detects which device is connecting to the second connecting interface, and switch to select one of the two transmission paths for transmitting data between the first connecting interface and the second connecting interface. Therefore, the present invention can achieve the purpose that the host device can bridge and transmit data with any other device conveniently.

Microchip Ex. 1015, p. 1
Microchip v. Aptiv
IPR2024-00228

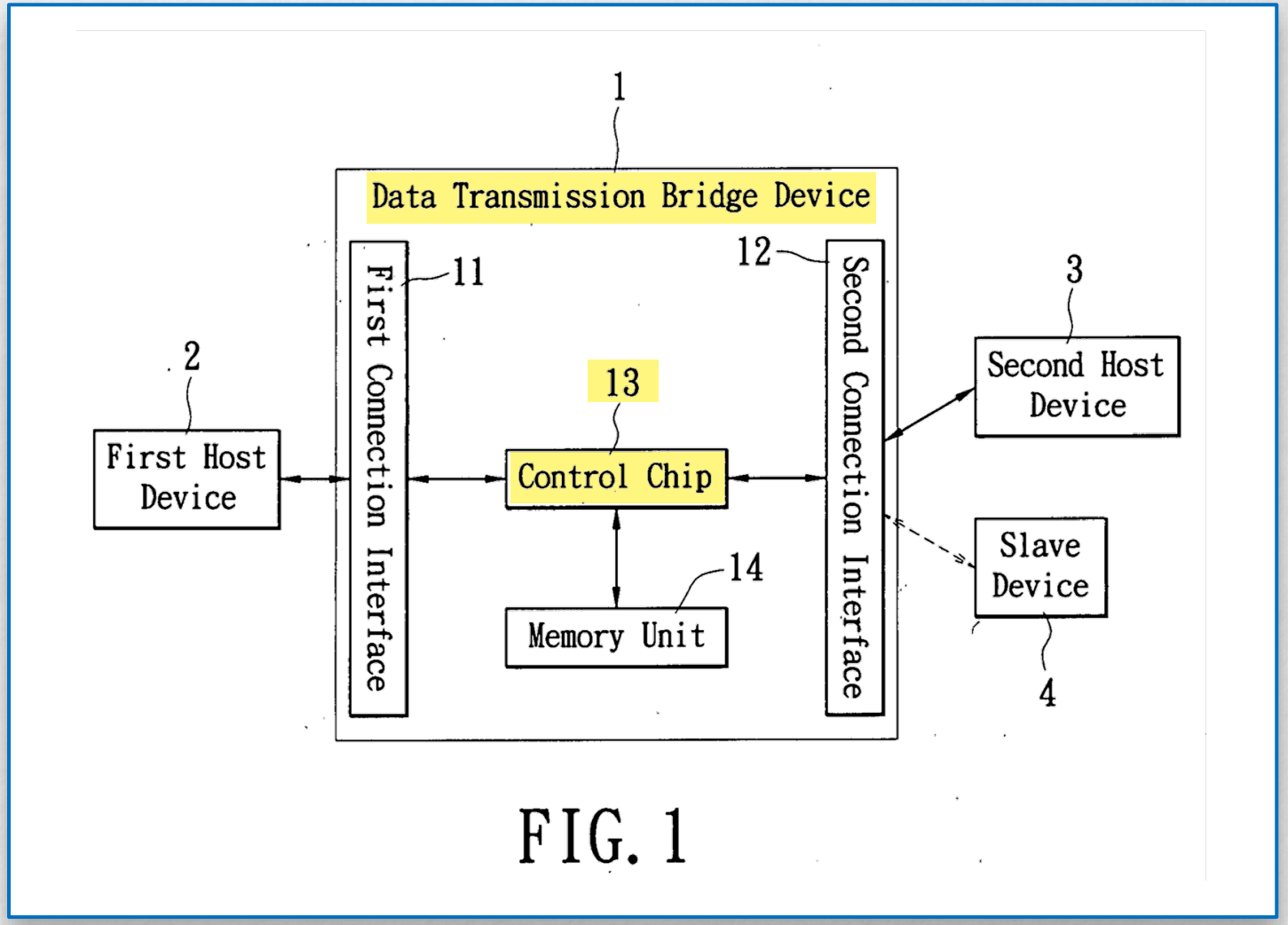

FIG. 1

EX1015 at Fig. 1

-228 POR (Paper 25), 26-32.

DEMONSTRATIVE EXHIBIT — NOT EVIDENCE

Chang II

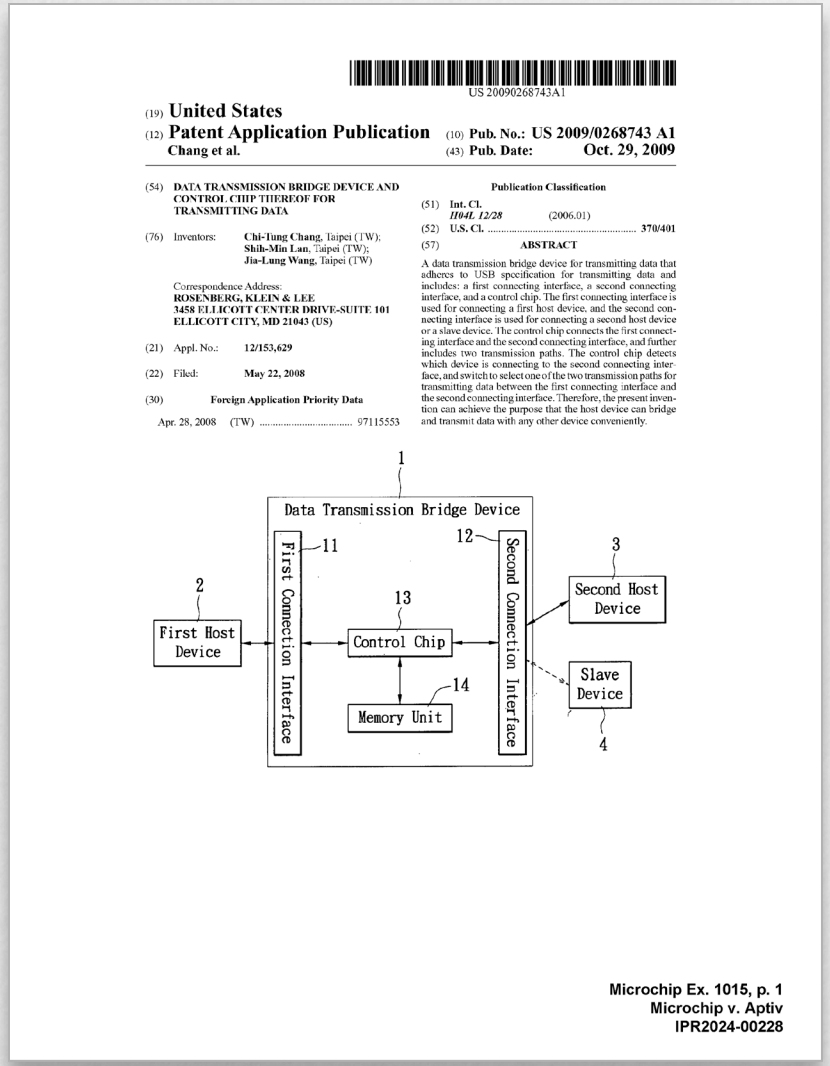

US 20090268743A1

(19) United States
(12) Patent Application Publication
Chang et al.
(10) Pub. No.: US 2009/0268743 A1
(43) Pub. Date: Oct. 29, 2009

(54) DATA TRANSMISSION BRIDGE DEVICE AND CONTROL CHIP THEREOF FOR TRANSMITTING DATA

(76) Inventors: Chi-Tung Chang, Taipei (TW); Shih-Min Lan, Taipei (TW); Jia-Lung Wang, Taipei (TW)

Correspondence Address:
ROSENBERG, KLEIN & LEE
3458 ELLICOTT CENTER DRIVE-SUITE 101
ELLICOTT CITY, MD 21043 (US)

(21) Appl. No.: 12/153,629

(22) Filed: May 22, 2008

(30) Foreign Application Priority Data

Apr. 28, 2008 (TW) 97115553

Publication Classification

(51) Int. Cl.
H04L 12/28 (2006.01)

(52) U.S. Cl. 370/401

(57) ABSTRACT

A data transmission bridge device for transmitting data that adheres to USB specification for transmitting data and includes: a first connecting interface, a second connecting interface, and a control chip. The first connecting interface is used for connecting a first host device, and the second connecting interface is used for connecting a second host device or a slave device. The control chip connects the first connecting interface and the second connecting interface, and further includes two transmission paths. The control chip detects which device is connecting to the second connecting interface, and switch to select one of the two transmission paths for transmitting data between the first connecting interface and the second connecting interface. Therefore, the present invention can achieve the purpose that the host device can bridge and transmit data with any other device conveniently.

Microchip Ex. 1015, p. 1
Microchip v. Aptiv
IPR2024-00228

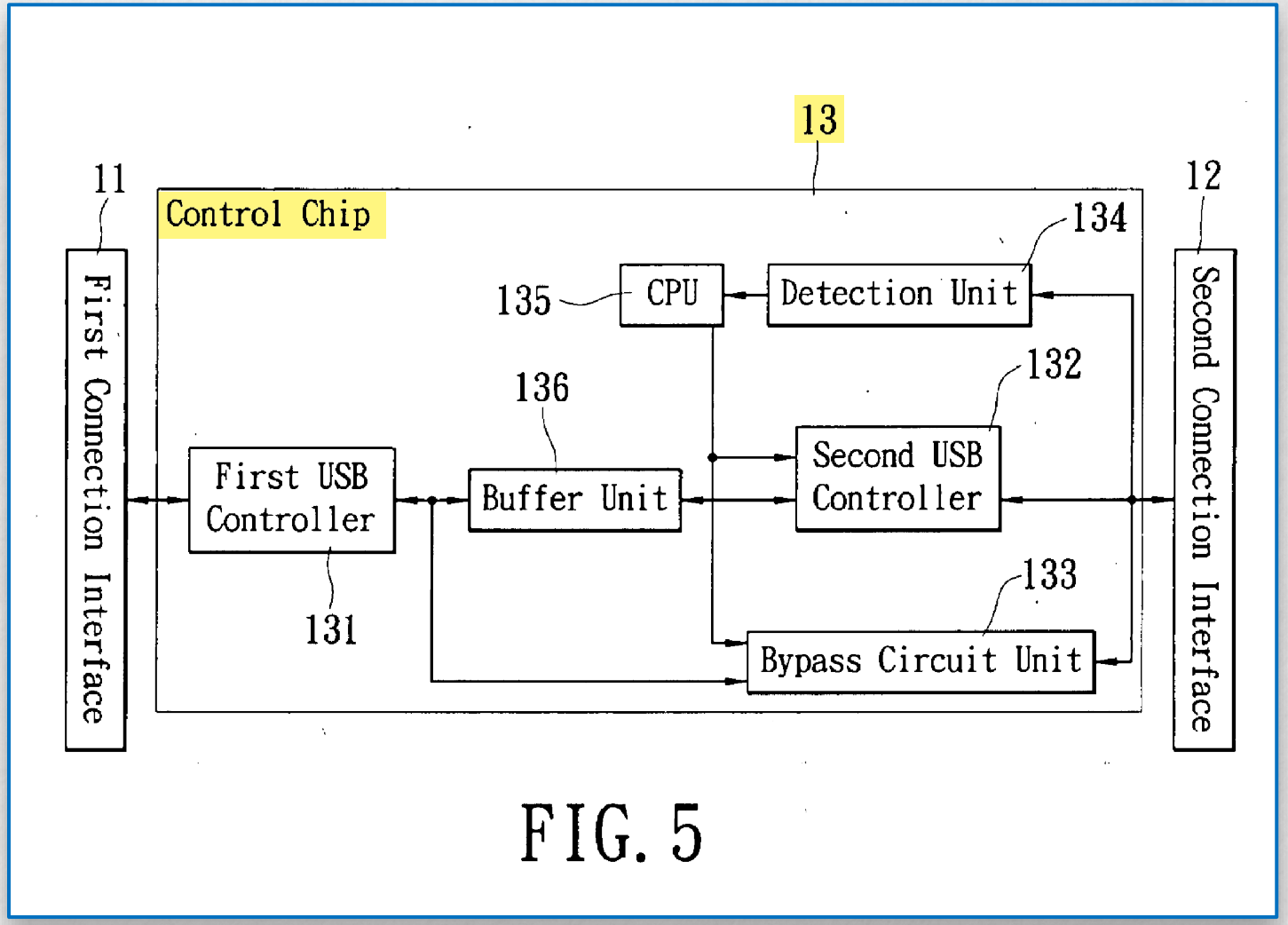

FIG. 5

Chang II, at Fig. 5

-228 POR (Paper 25), 26-32.

DEMONSTRATIVE EXHIBIT — NOT EVIDENCE

Chang II

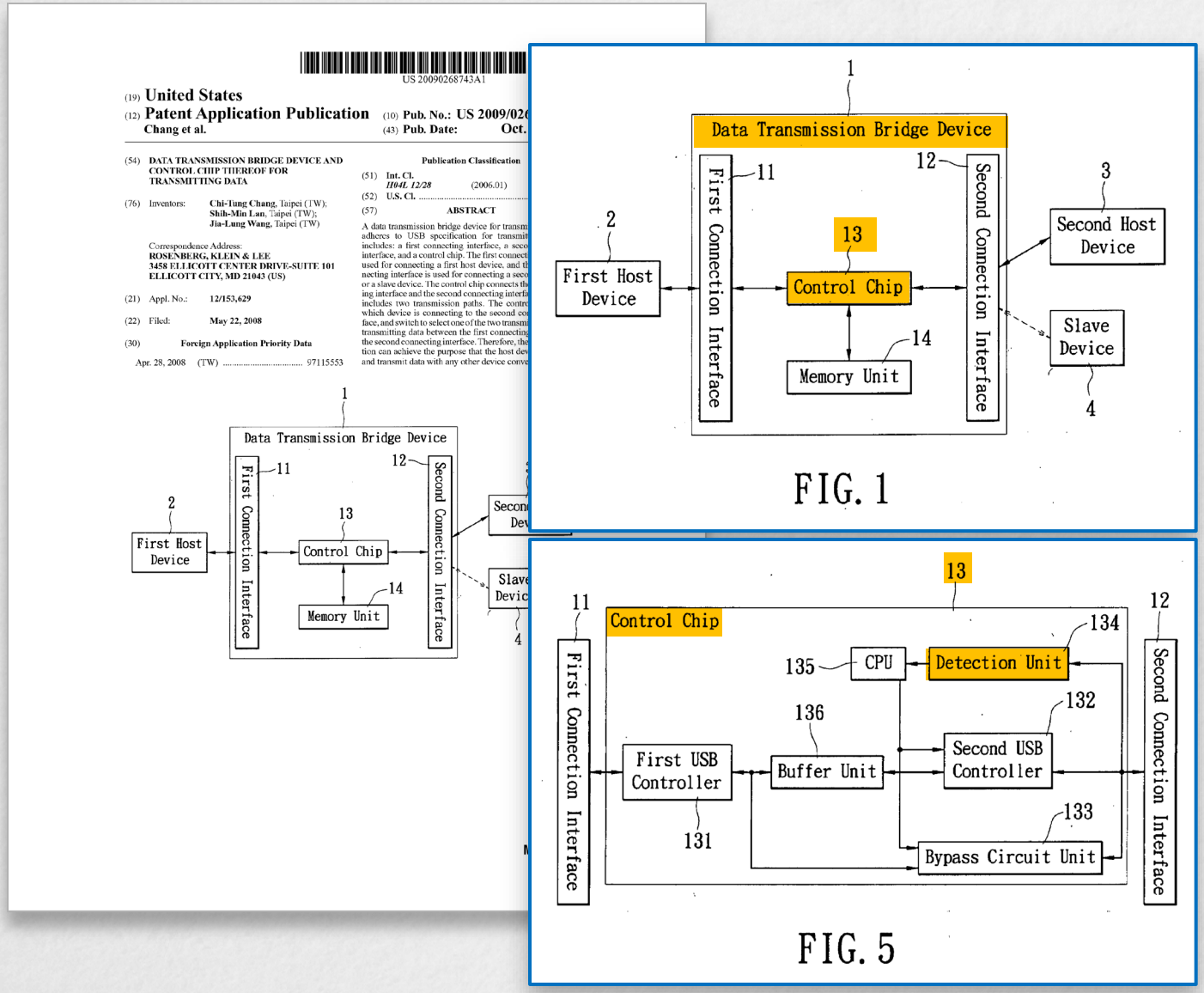

- No Hub
- Only One Downstream Port
- No Crossbar
- No routing/detection logic for multiple downstream ports
- No Bridge Bypass

-228 POR (Paper 25), 16-18, 57-61.

DEMONSTRATIVE EXHIBIT — NOT EVIDENCE

Chang
Fig. 3

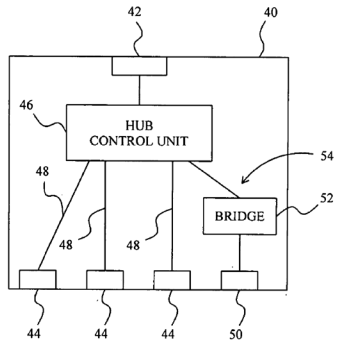

Chang II
Fig. 3

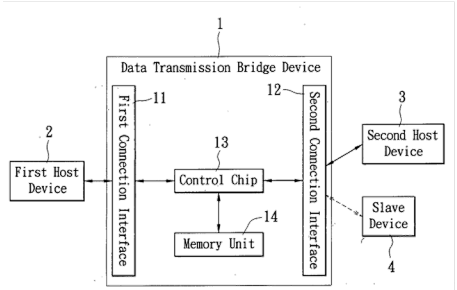

FIG. 1

Microchip's Proposed Combination

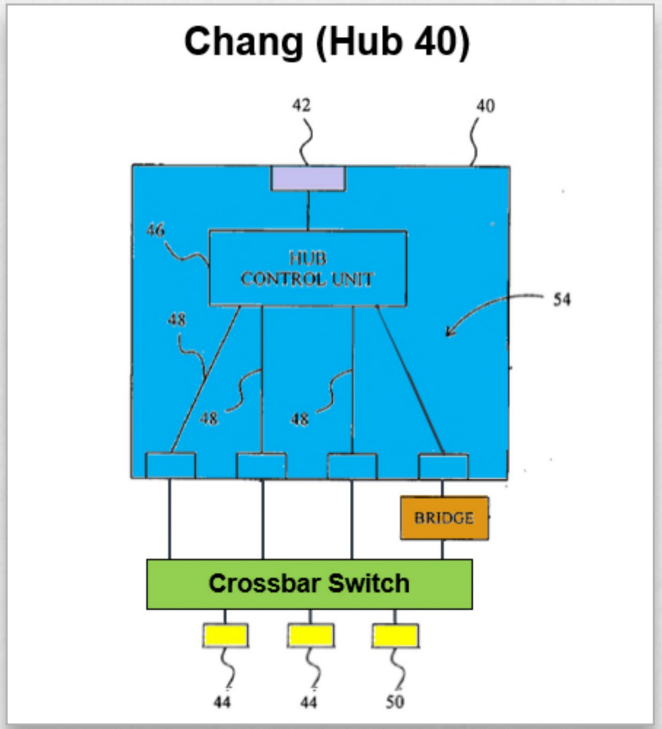

IN THE UNITED STATES PATENT AND TRADEMARK OFFICE

BEFORE THE PATENT TRIAL AND APPEAL BOARD

MICROCHIP TECHNOLOGY INC.,
Petitioner,

v.

APTIV TECHNOLOGIES AG AND APTIV TECHNOLOGIES LIMITED,
Patent Owners.

1. Motivation to Combine

As §VI.A demonstrates, Chang discloses a hub with dedicated downstream device ports (for host-device connections) and a dedicated downstream host port (for a host-host connection through a bridge). It would have been obvious to modify Chang in view of Chang II and a POSITA's knowledge to include dual-role port(s) and a switch to route the ports to the appropriate transmission path. Welch, ¶¶175-202.

-228 Pet. (Paper 1), 33-45.

DEMONSTRATIVE EXHIBIT — NOT EVIDENCE

Step 1 – Modify Chang's 4 Dedicated Ports to be 3 Dual Role Ports

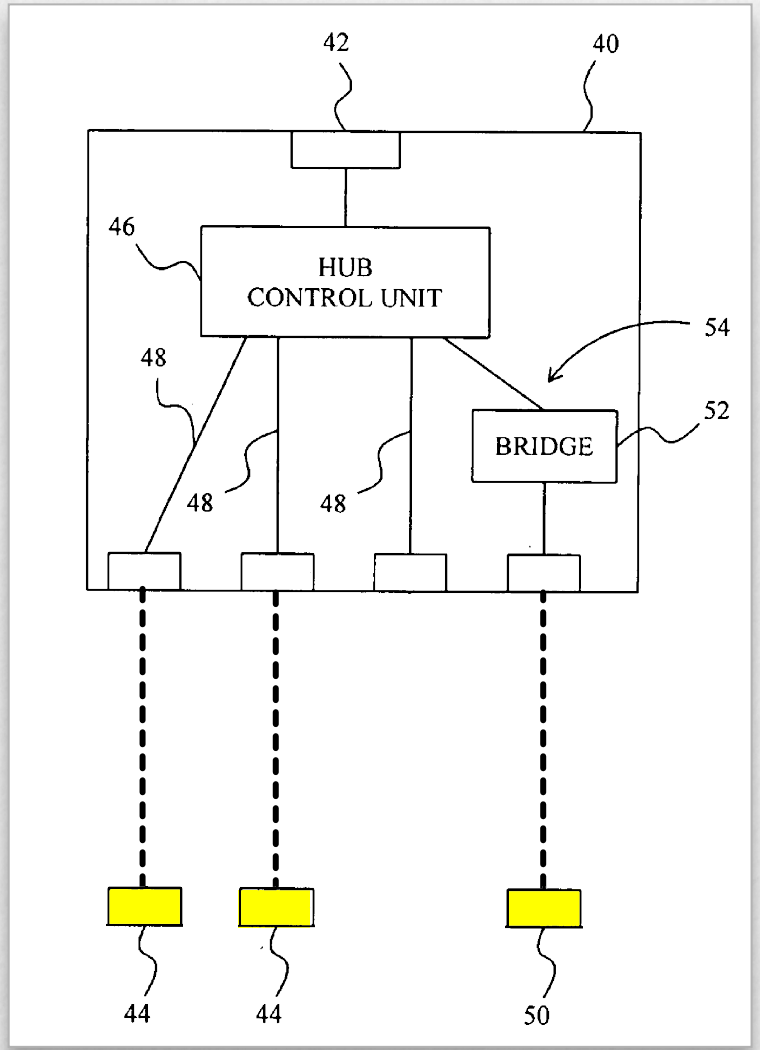

-228 POR (Paper 25), 16-18, 57-61.

DEMONSTRATIVE EXHIBIT — NOT EVIDENCE

Step 1 – Modify Chang's 4 Dedicated Ports to be 3 Dual Role Ports

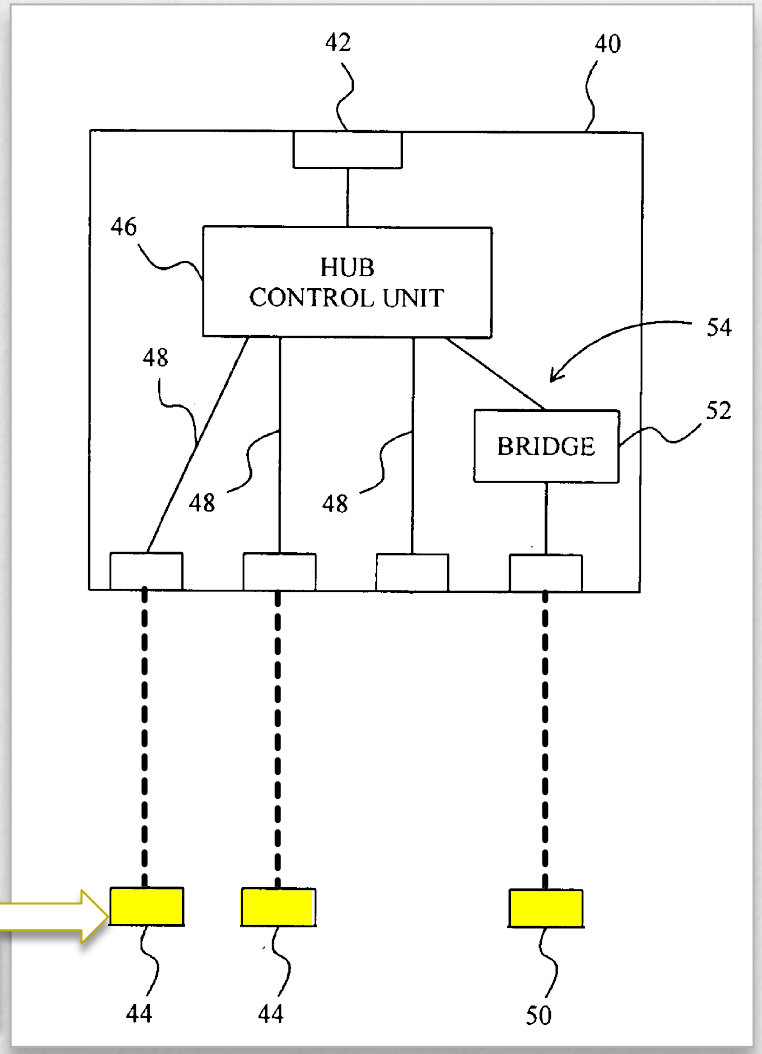

POSITA KNOWLEDGE

-228 POR (Paper 25), 16-18, 57-61.

DEMONSTRATIVE EXHIBIT — NOT EVIDENCE

Step 1 – Modify Chang's 4 Dedicated Ports to be 3 Dual Role Ports

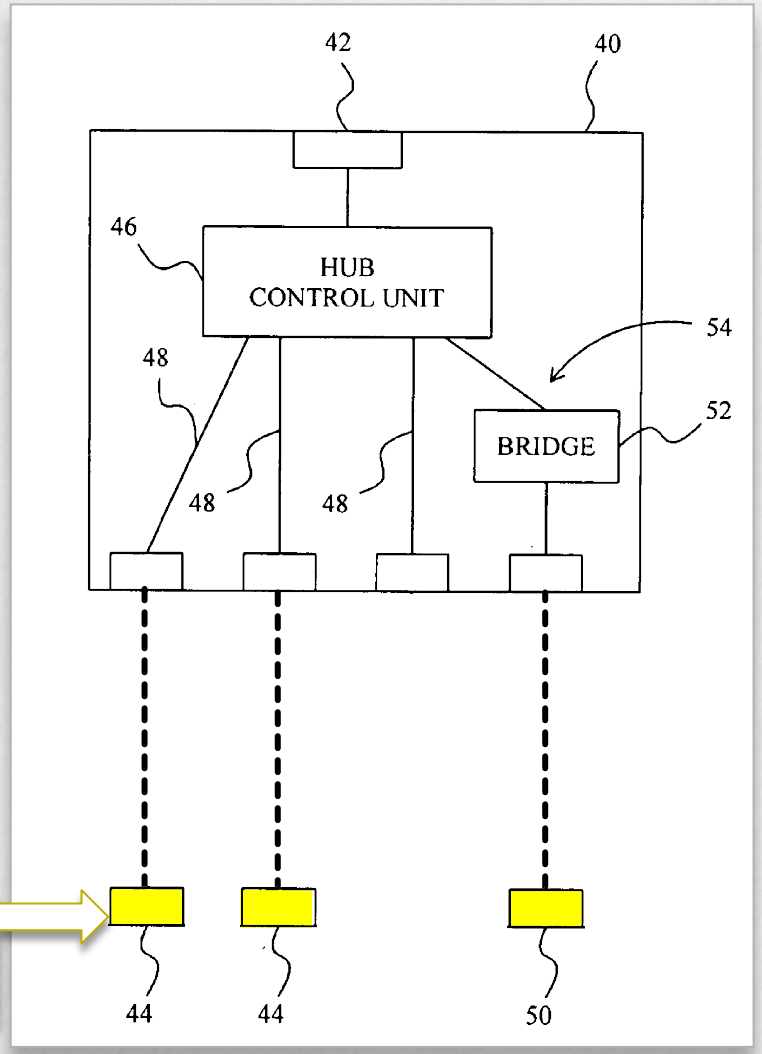

POSITA KNOWLEDGE

This solution addresses the issue but has some disadvantages. First, USB Hubs do not support OTG and can no longer be used in the system. Each consumer accessible USB port that supports OTG must have a dedicated wire link to a dedicated OTG controller in the Head Unit thus negating the wiring savings associated with use of USB Hubs. As a result several costly cables may need to be added to the vehicle's electrical system. Second, there may not be enough

EX1003 at 3:27-34.

-228 POR (Paper 25), 16-18, 57-61.

DEMONSTRATIVE EXHIBIT — NOT EVIDENCE

Step 1 – Modify Chang's 4 Dedicated Ports to be 3 Dual Role Ports

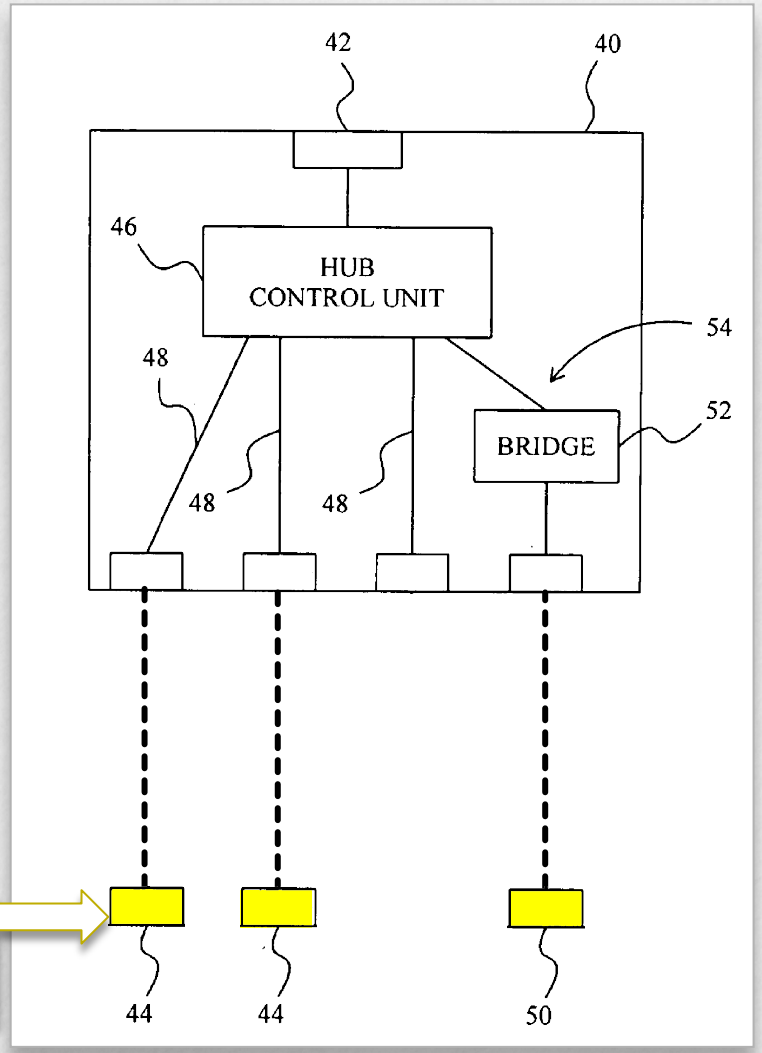

POSITA KNOWLEDGE

Q. Okay. Do you have any sense for how much increase in cost would occur by making the three ports shown in Figure 3 of Chang dual role?

A. I -- I wasn't asked to look at that at all.

EX2021 at 236:23-237:1.

-228 POR (Paper 25), 16-18, 57-61.

DEMONSTRATIVE EXHIBIT — NOT EVIDENCE

Step 1 – Modify Chang's 4 Dedicated Ports to be 3 Dual Role Ports

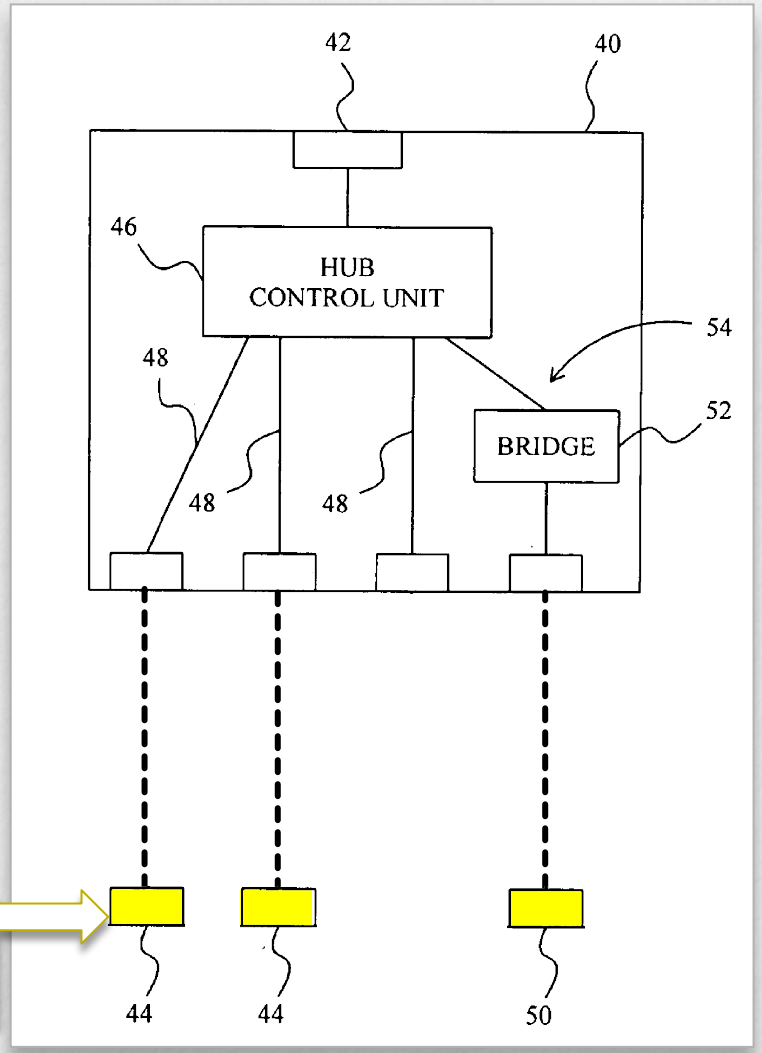

POSITA KNOWLEDGE

Q. Okay. But it would increase the cost, right?

A. Presumably. But, again, I wasn't asked to look at that.

EX2021 at 237:2-5.

-228 POR (Paper 25), 16-18, 57-61.

DEMONSTRATIVE EXHIBIT — NOT EVIDENCE

Step 2 – Add a Crossbar Between Bridge and Downstream Ports

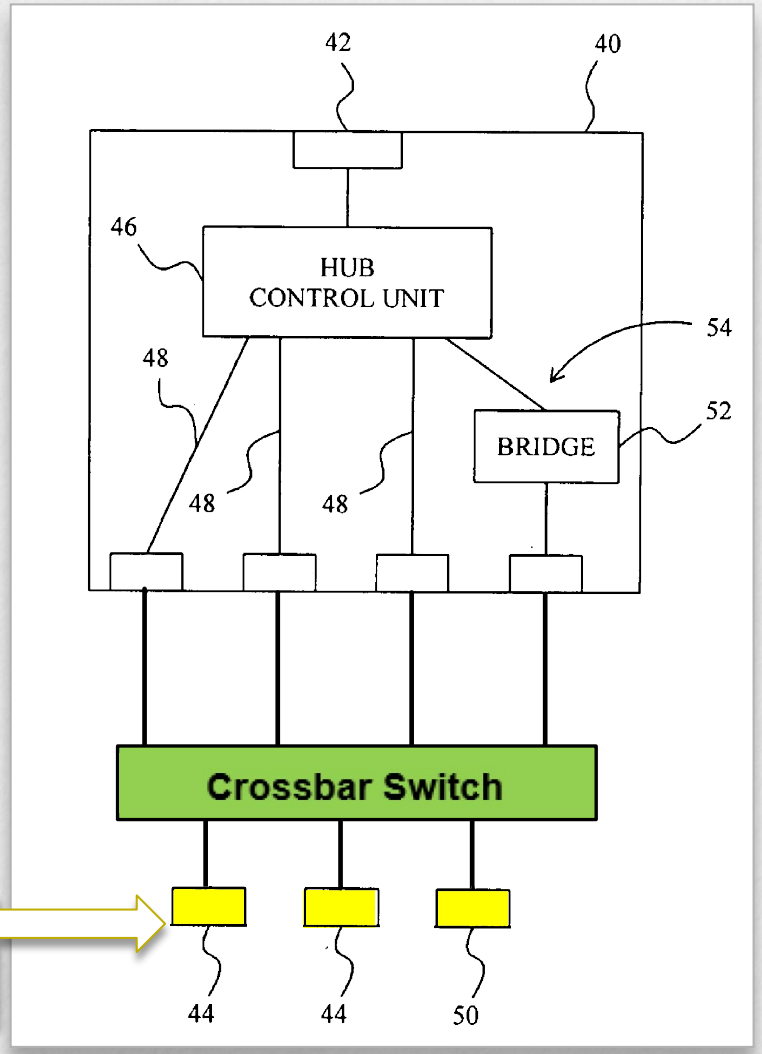

POSITA KNOWLEDGE

-228 POR (Paper 25), 16-18, 57-61.

DEMONSTRATIVE EXHIBIT — NOT EVIDENCE

Step 2 – Add a Crossbar Between Bridge and Downstream Ports

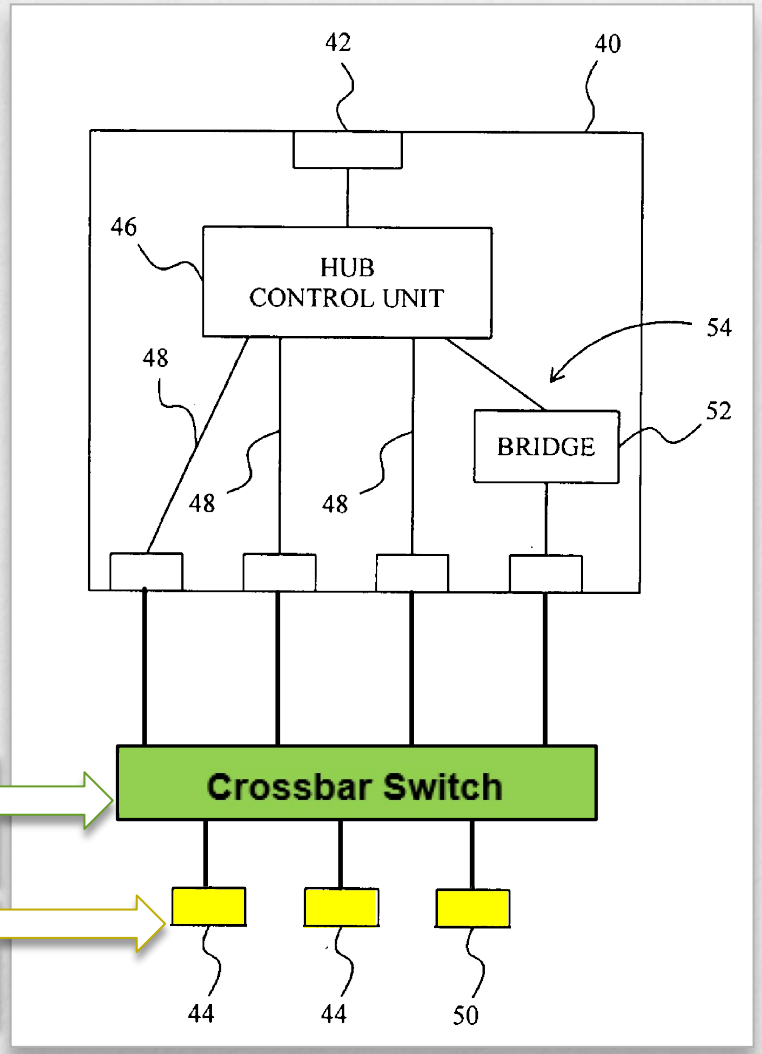

POSITA KNOWLEDGE

POSITA KNOWLEDGE

-228 POR (Paper 25), 16-18, 57-61.

DEMONSTRATIVE EXHIBIT — NOT EVIDENCE

Step 2 – Add a Crossbar Between Bridge and Downstream Ports

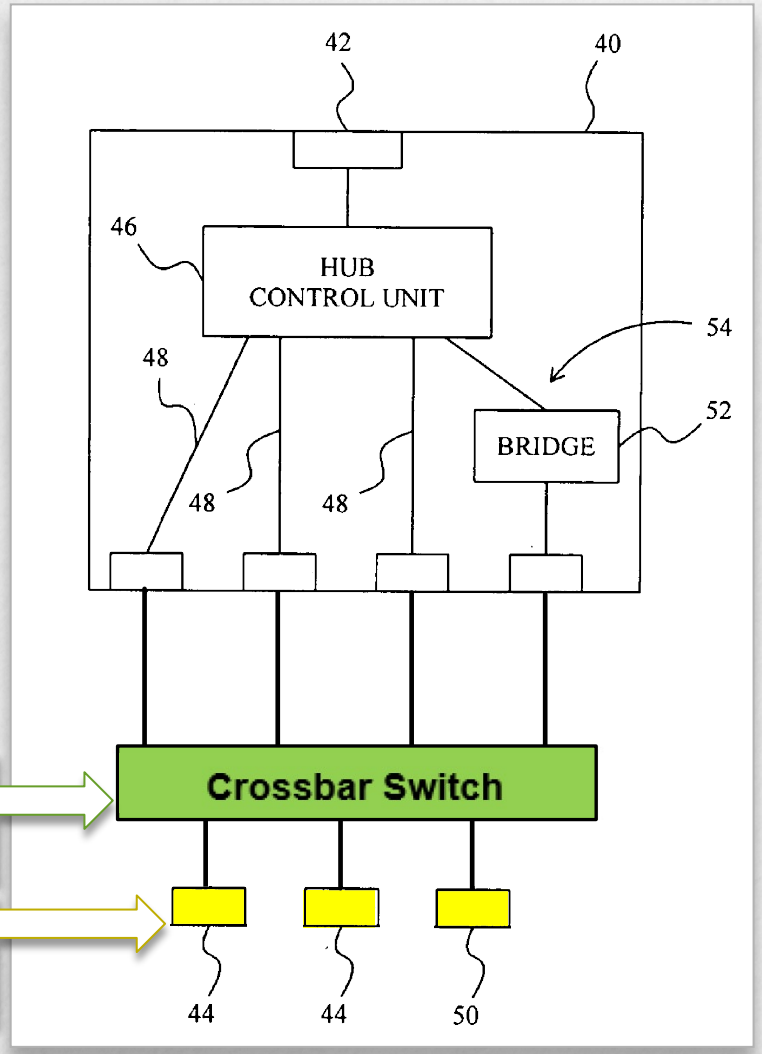

POSITA KNOWLEDGE

POSITA KNOWLEDGE

Q. Okay. And do you have any idea how much increase in cost it would cause to add a cross/bar switch to Chang after making these ports dual role?

A. Again, I wasn't asked to look at that.

EX2021 at 237:7-10.

-228 POR (Paper 25), 16-18, 57-61.

DEMONSTRATIVE EXHIBIT — NOT EVIDENCE

Step 2 – Add a Crossbar Between Bridge and Downstream Ports

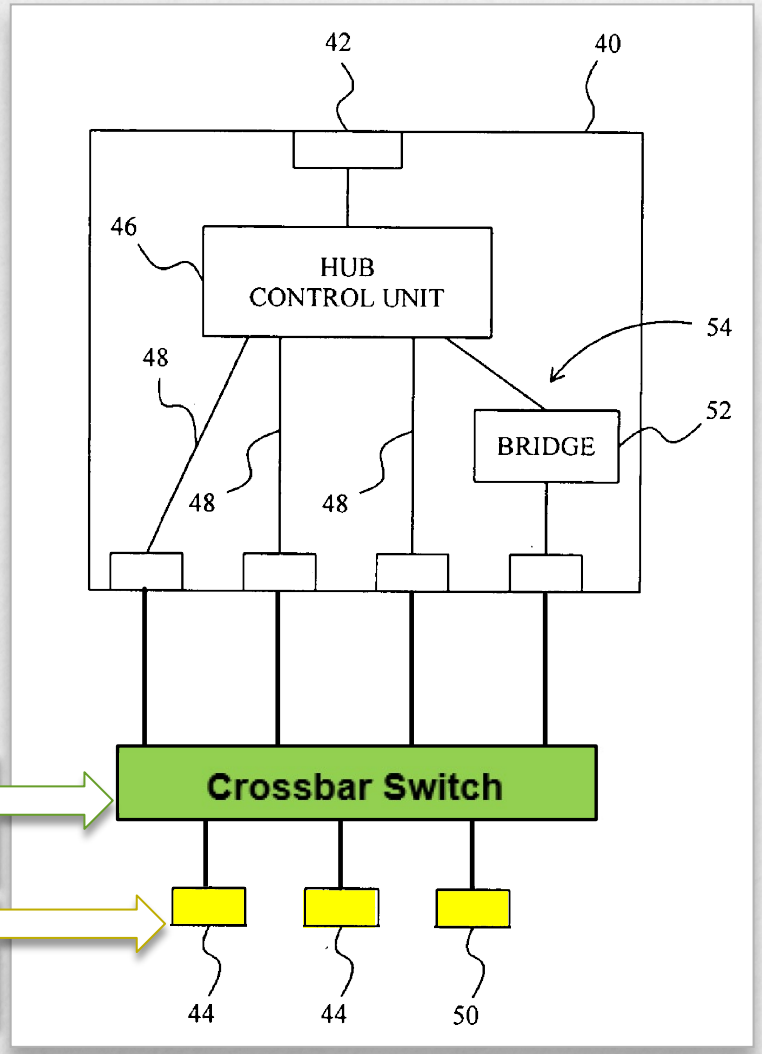

POSITA KNOWLEDGE

POSITA KNOWLEDGE

Q. Okay. But it would be an increase in cost, right? This is not cost even. This is --

A. Presumably, yes. But, again, I wasn't asked to look at it, so --

Q. Okay.

A. -- I would say.

EX2021 at 237:11-16.

-228 POR (Paper 25), 16-18, 57-61.

DEMONSTRATIVE EXHIBIT — NOT EVIDENCE

Step 3 –Modify Chang's Bridge

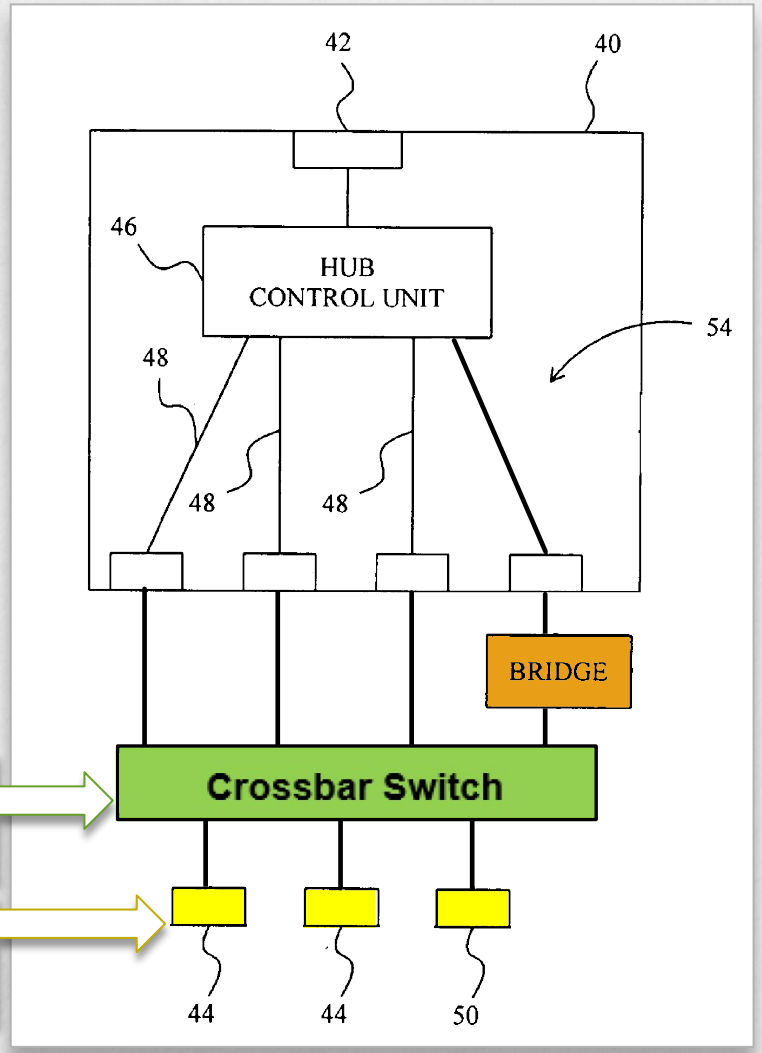

POSITA KNOWLEDGE

POSITA KNOWLEDGE

-228 POR (Paper 25), 13-14, 23-24.

DEMONSTRATIVE EXHIBIT — NOT EVIDENCE

Step 3 –Modify Chang's Bridge

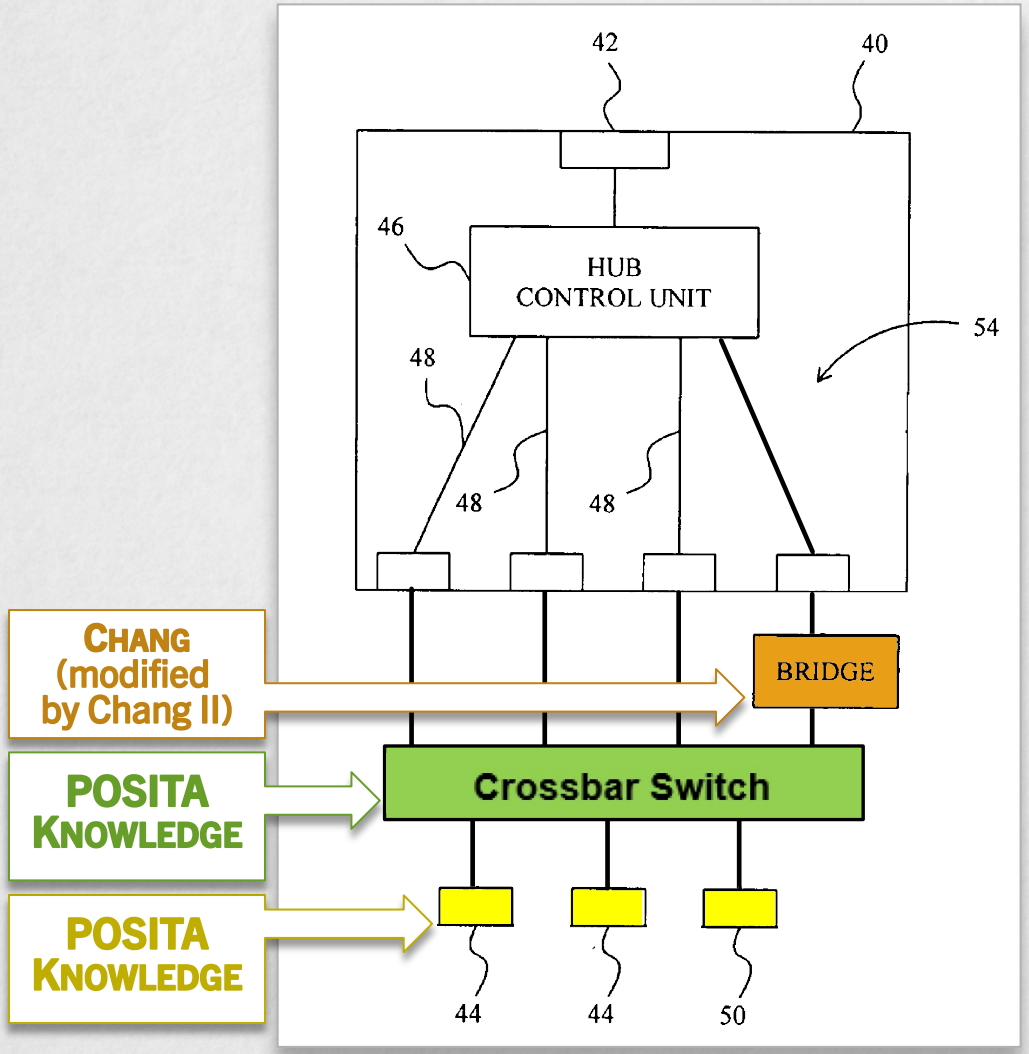

"Further, while Chang discloses little regarding its bridge (EX1014, [0020]), Chang II details various aspects of its bridge (EX1015, Title, Figs. 1-2 and 5)."

Petition (-228) at 37.

-228 POR (Paper 25), 13-14, 23-24.

DEMONSTRATIVE EXHIBIT — NOT EVIDENCE

Step 3 –Modify Chang's Bridge

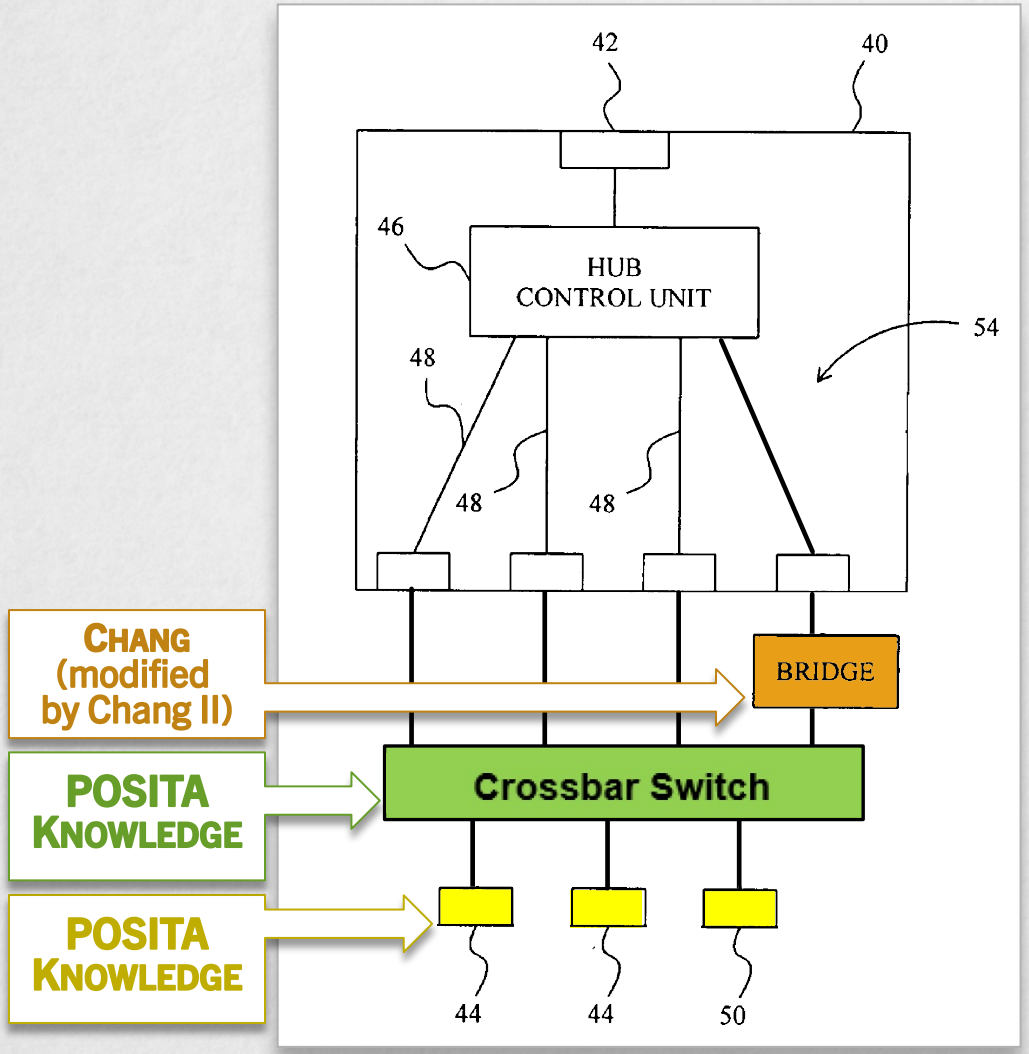

"And Chang II further discloses 'detection unit 134' for detecting whether the consumer product is host or device."
Petition (-228) at 37.

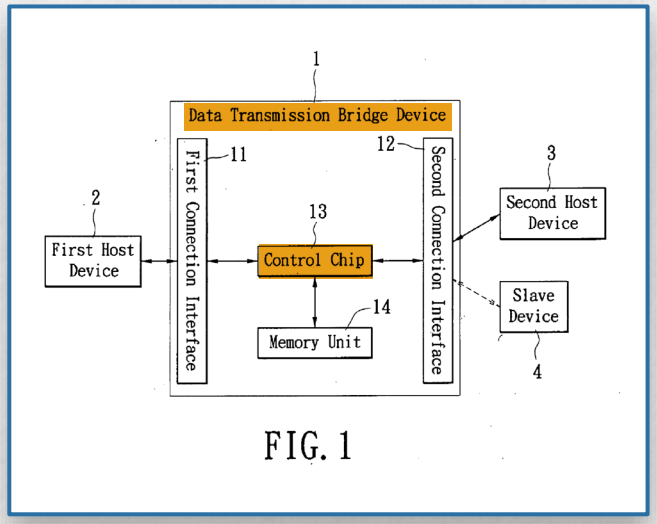

FIG. 1

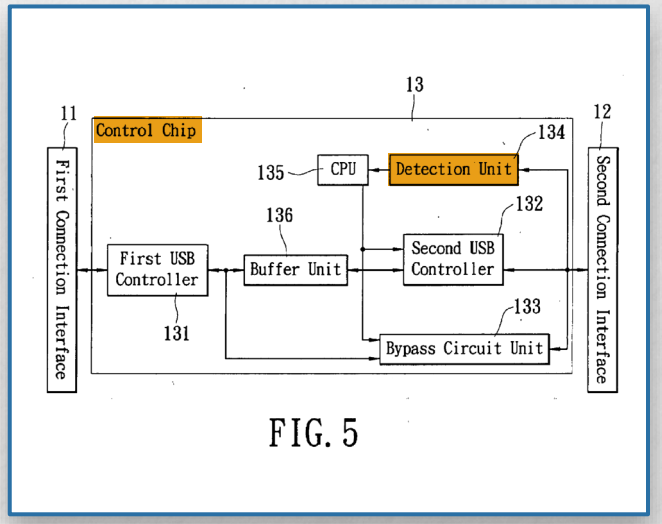

FIG. 5

-228 POR (Paper 25), 13-14, 23-24.

DEMONSTRATIVE EXHIBIT — NOT EVIDENCE

Step 4 – Modify Detection Unit Algorithm

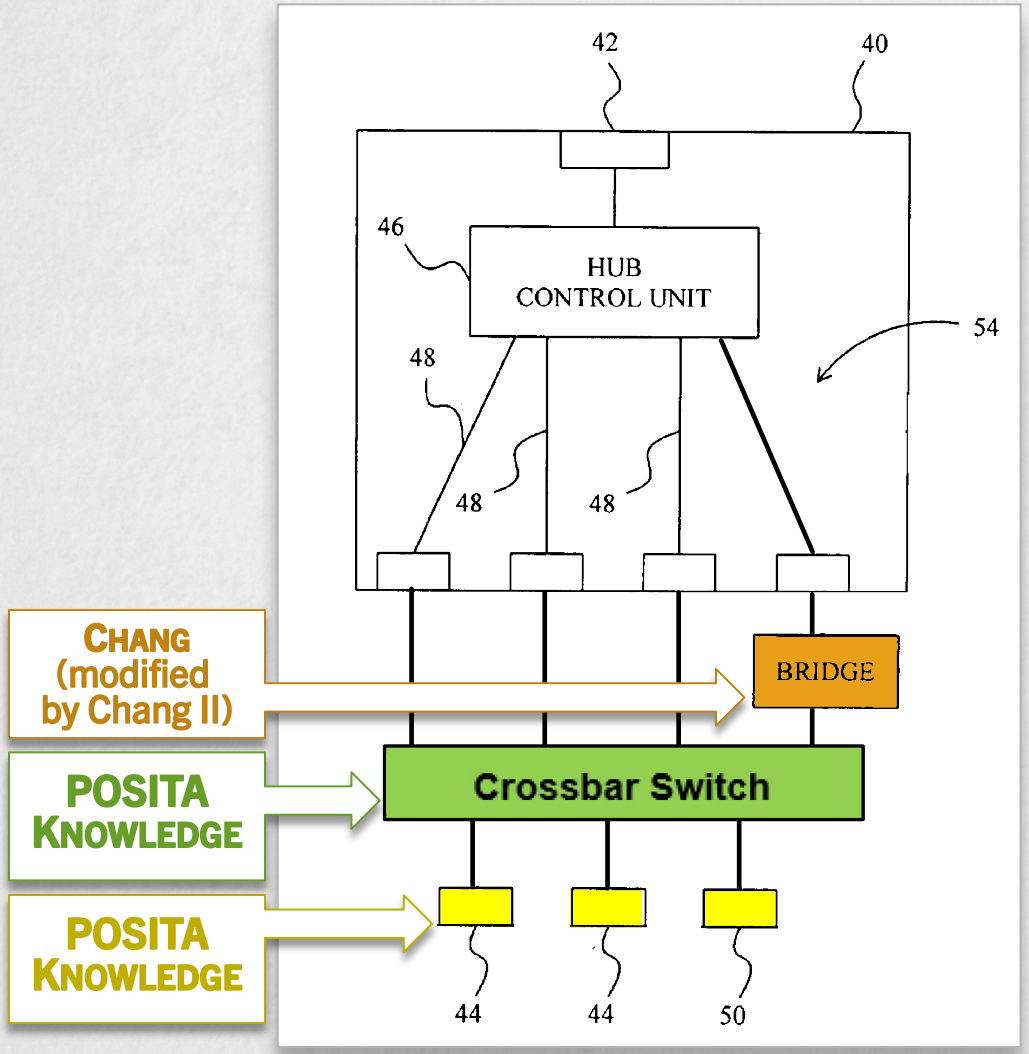

-228 POR (Paper 25), 44-48.

DEMONSTRATIVE EXHIBIT — NOT EVIDENCE

Step 4 – Modify Detection Unit Algorithm

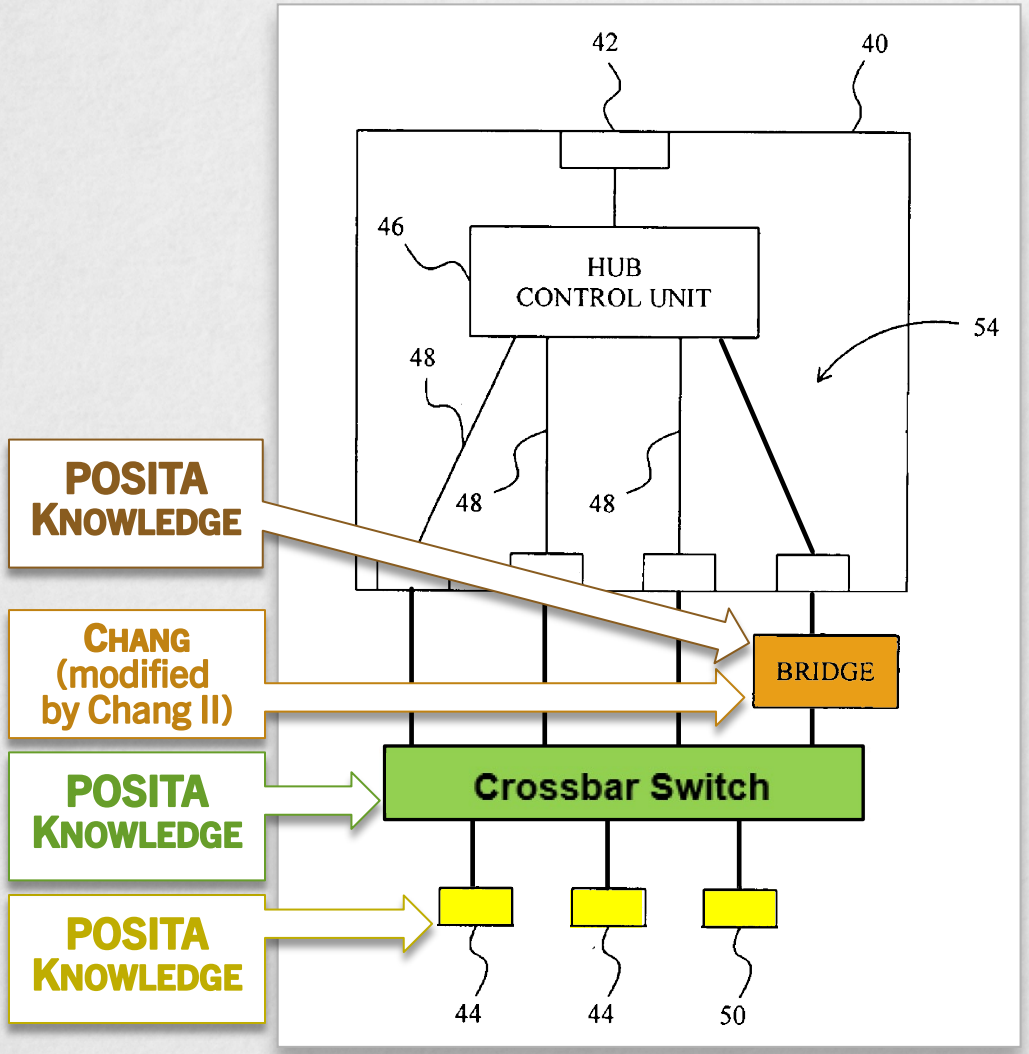

-228 POR (Paper 25), 44-48.

DEMONSTRATIVE EXHIBIT — NOT EVIDENCE

Step 4 – Modify Detection Unit Algorithm

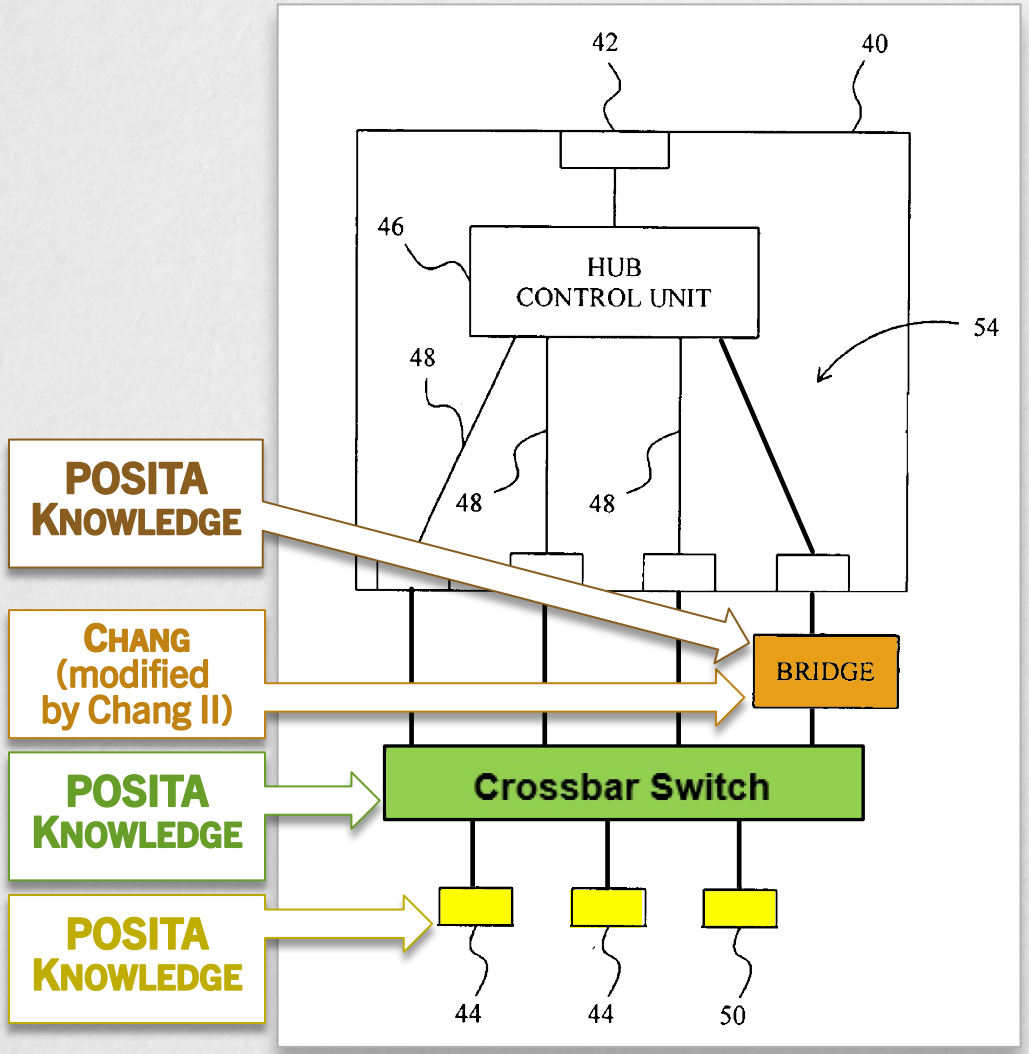

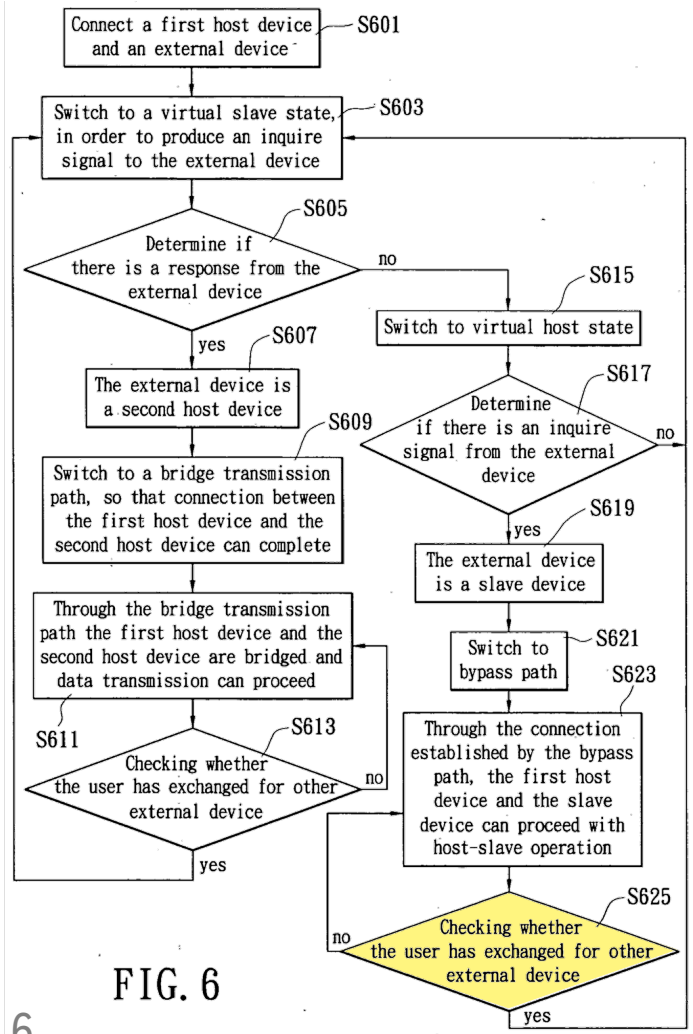

FIG. 6

EX1015, Fig. 6.

-228 POR (Paper 25), 44-48.

DEMONSTRATIVE EXHIBIT — NOT EVIDENCE

Step 4 – Modify Detection Unit Algorithm

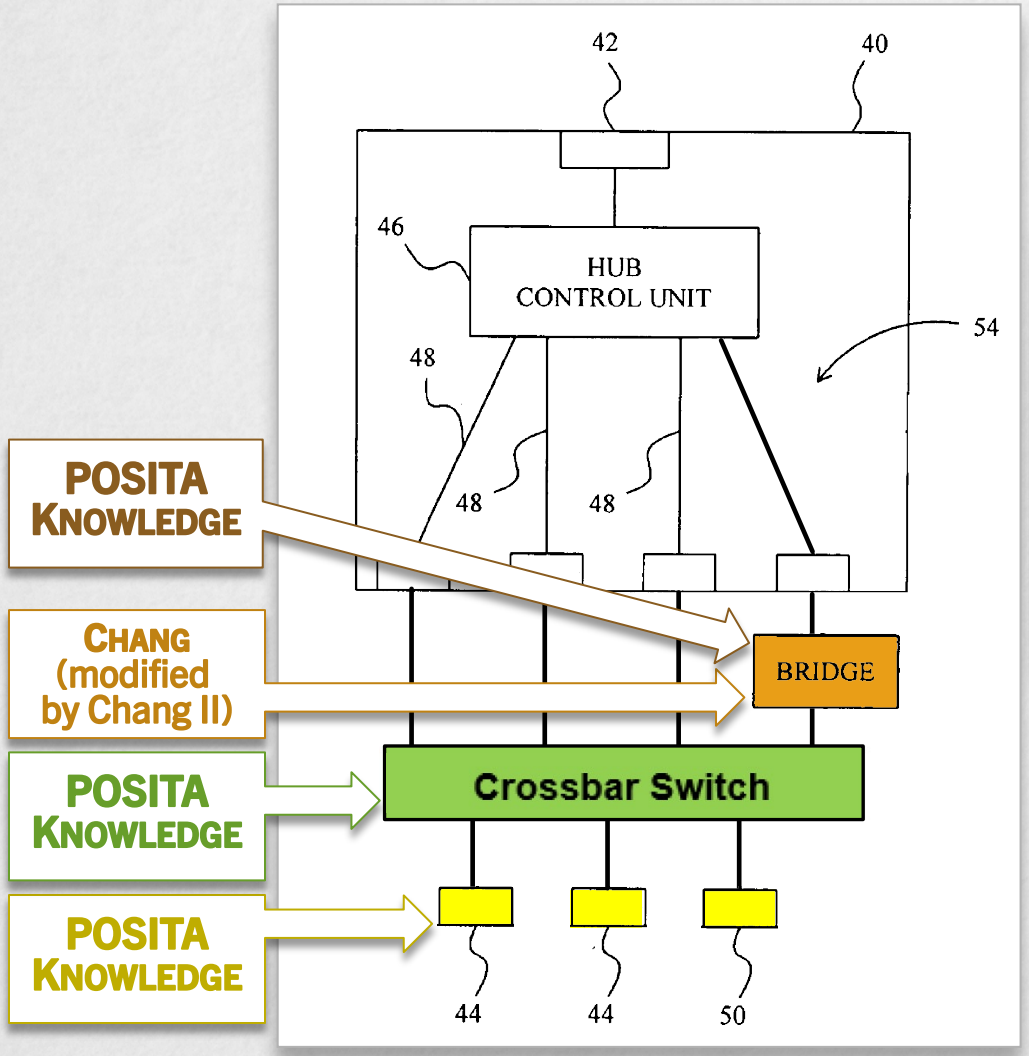

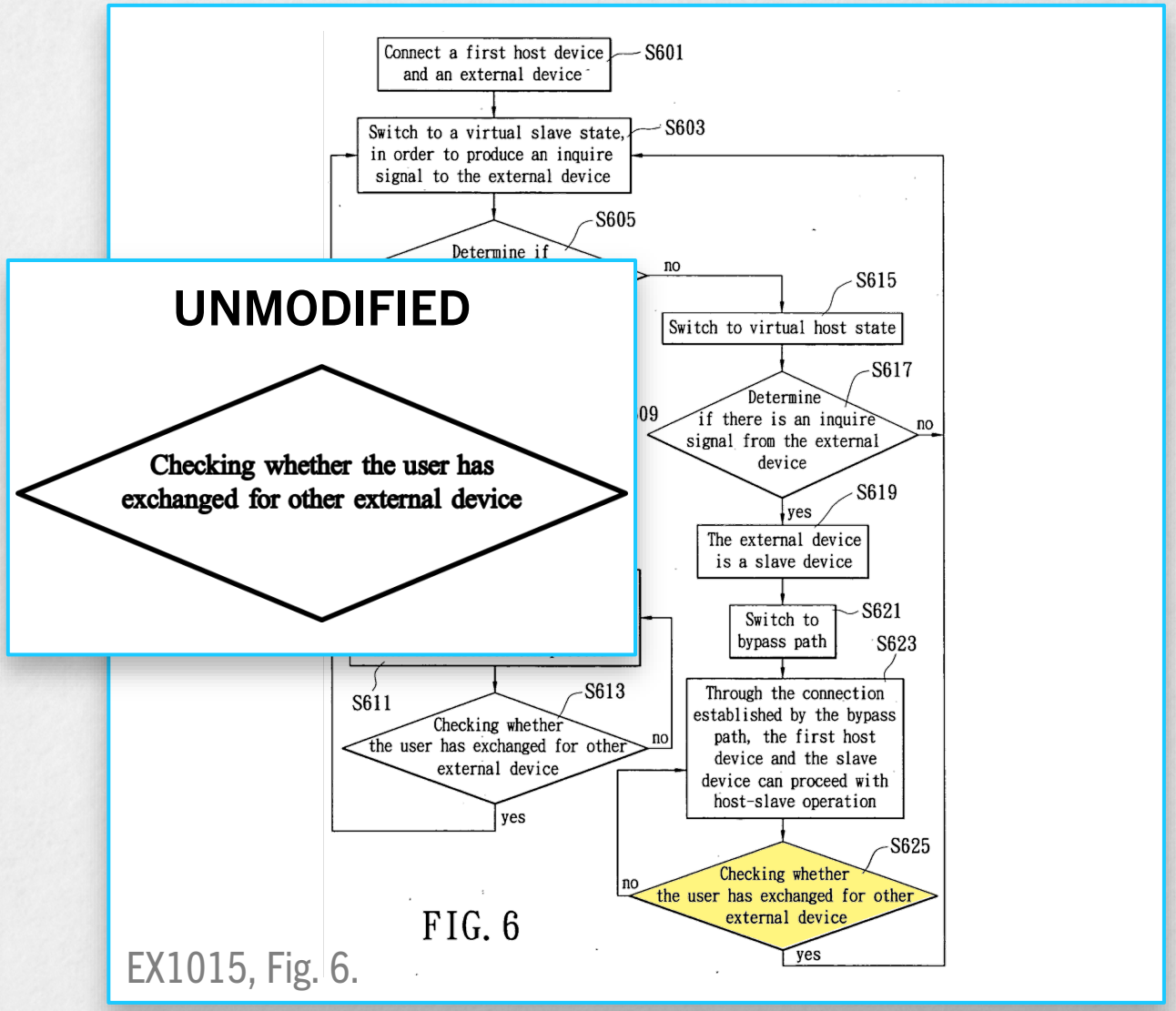

EX1015, Fig. 6.

-228 POR (Paper 25), 44-48.

DEMONSTRATIVE EXHIBIT — NOT EVIDENCE

Step 4 – Modify Detection Unit Algorithm

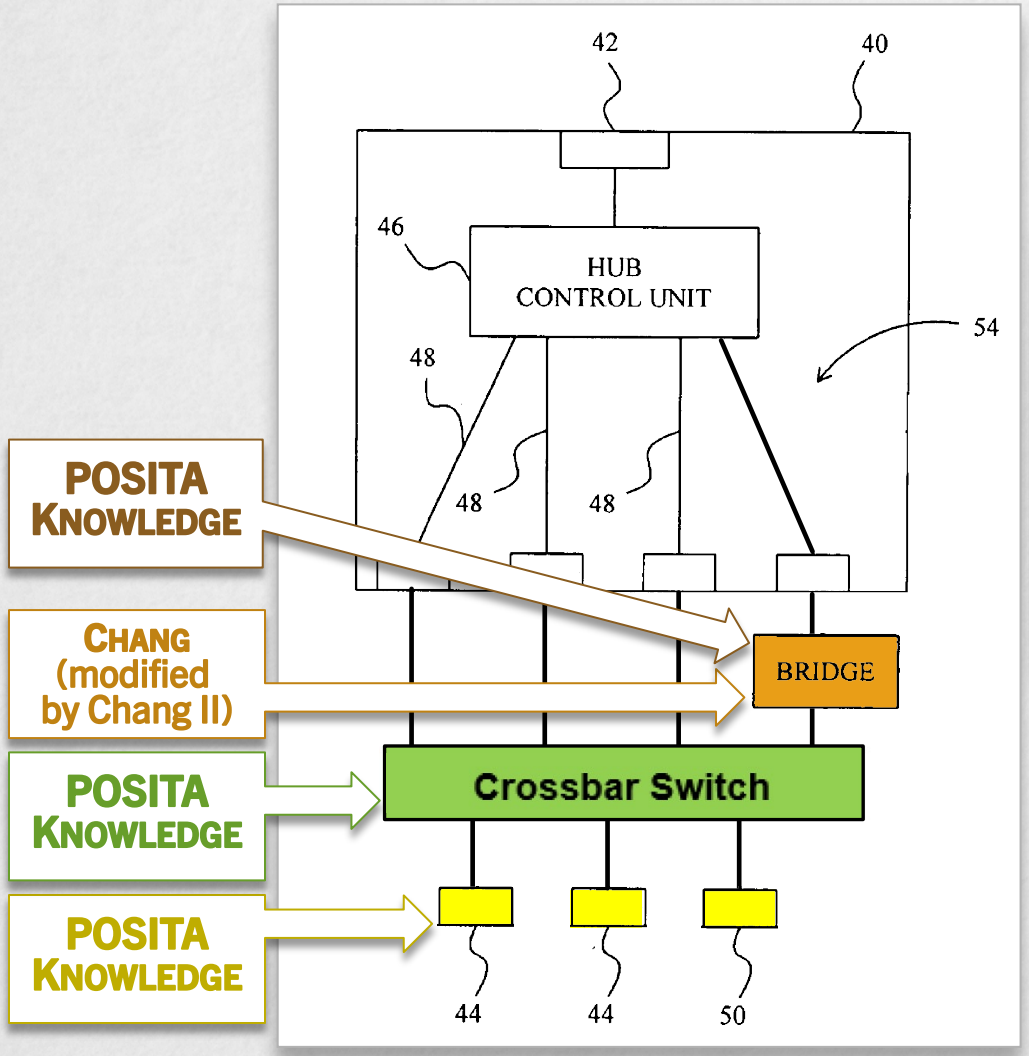

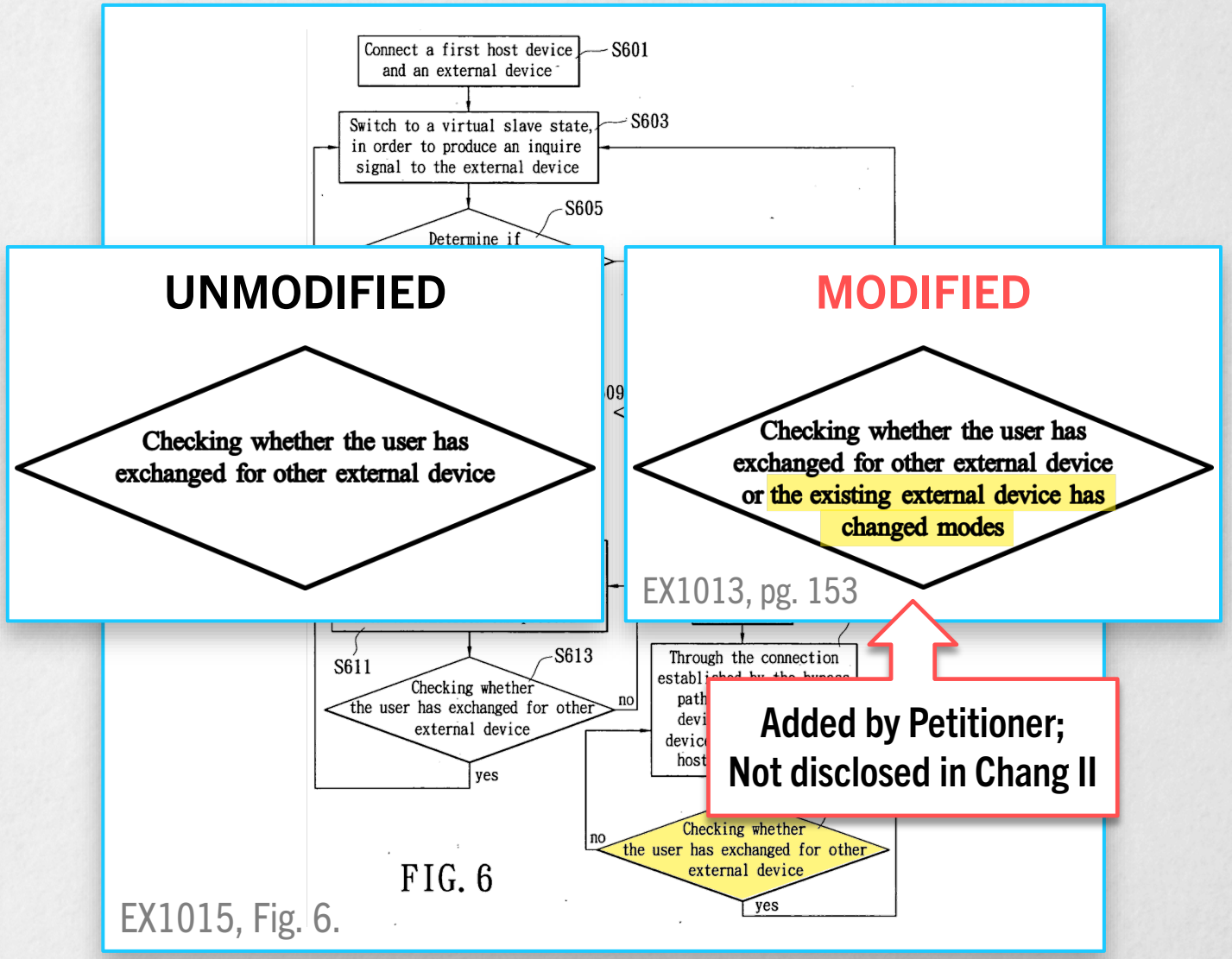

-228 POR (Paper 25), 44-48.

DEMONSTRATIVE EXHIBIT — NOT EVIDENCE

Step 5 – Implement in Vehicle/Infotainment System

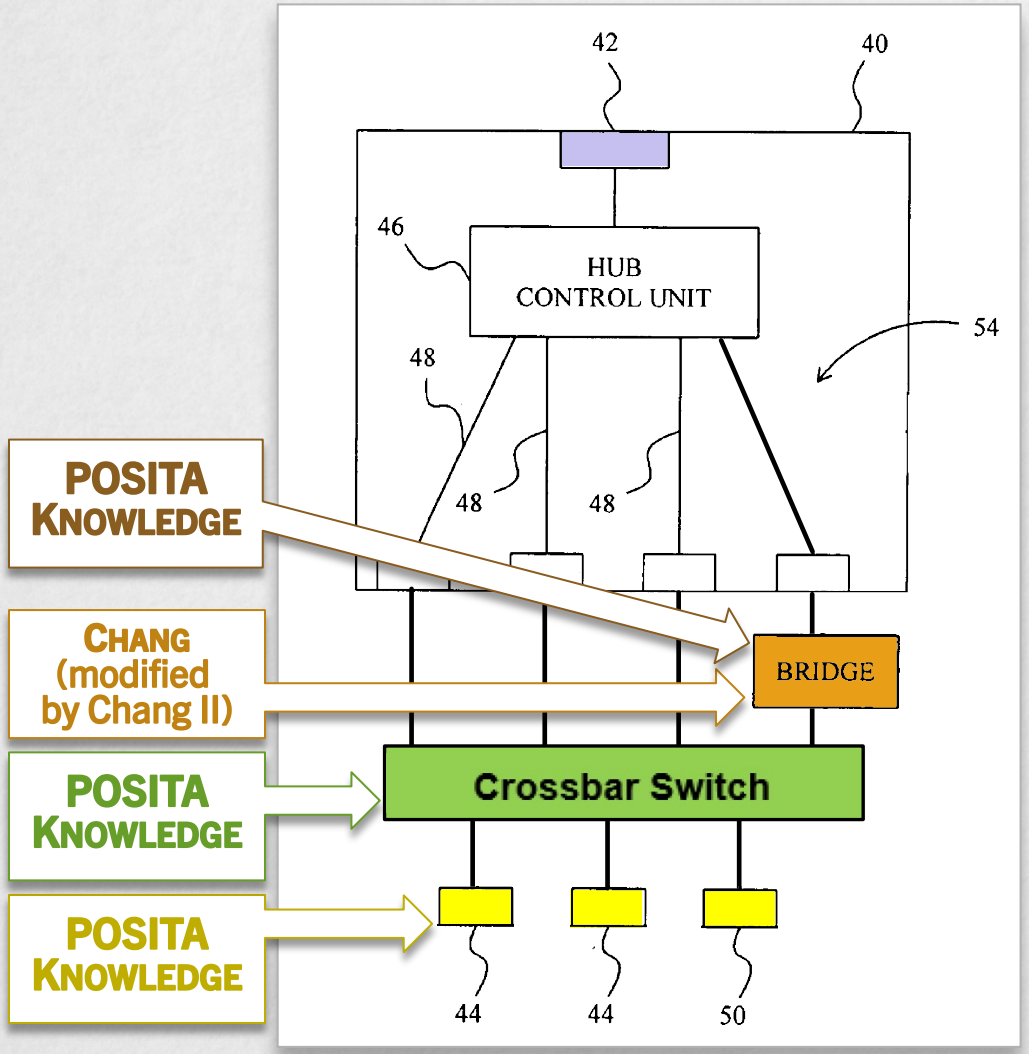

-230 POR (Paper 25), 53-54.

DEMONSTRATIVE EXHIBIT — NOT EVIDENCE

Step 5 – Implement in Vehicle/Infotainment System

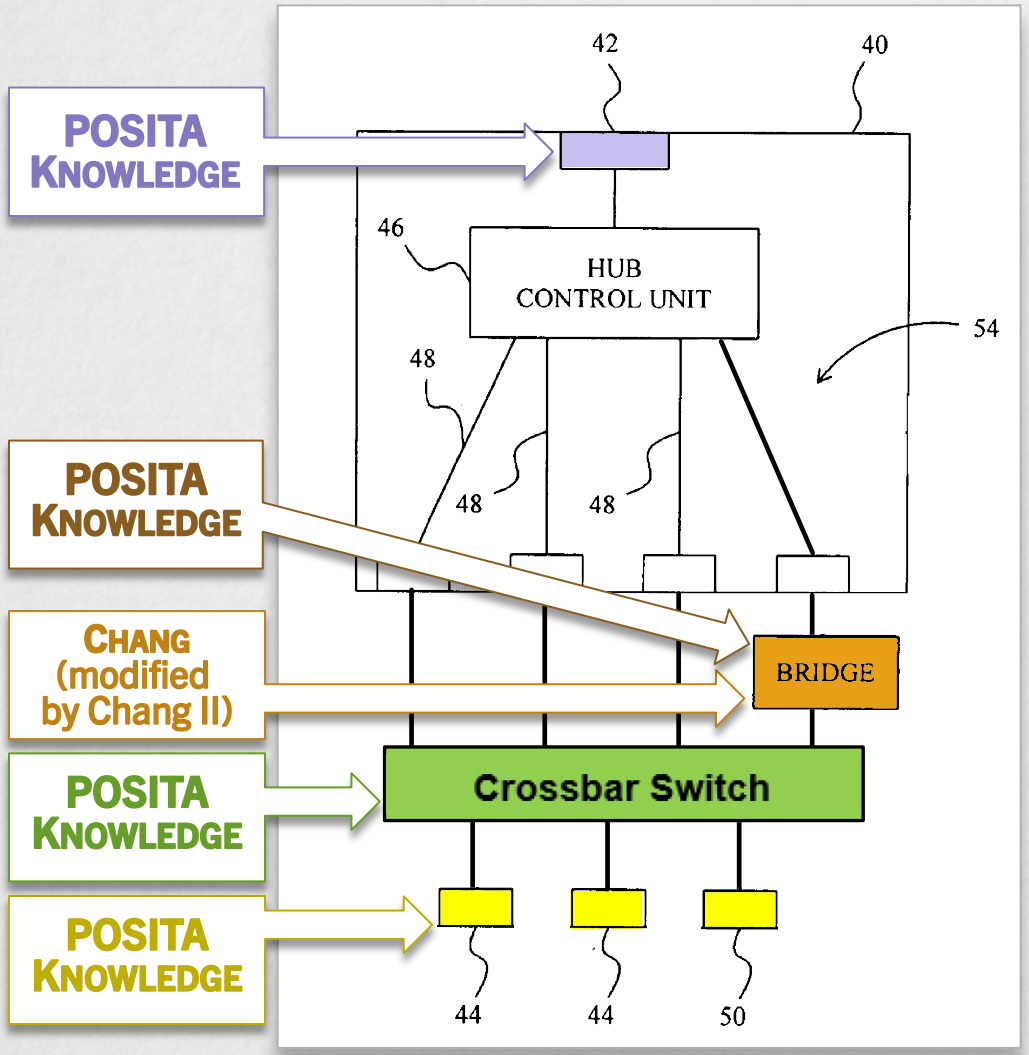

-230 POR (Paper 25), 53-54.

DEMONSTRATIVE EXHIBIT — NOT EVIDENCE

Step 5 – Implement in Vehicle/Infotainment System

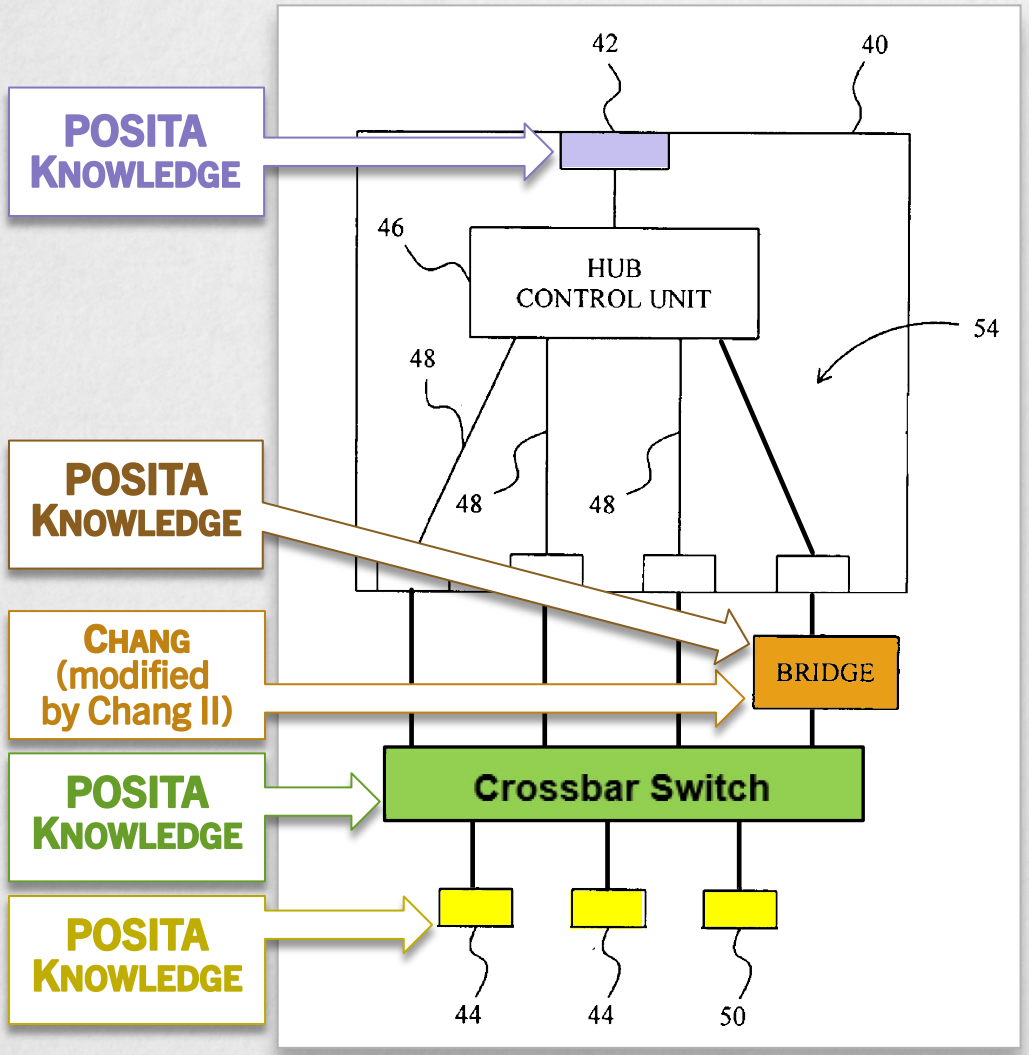

- "Accordingly, a POSITA would have recognized Chang applies to any system employing a USB hub where host-to-host communication would be advantageous – including a vehicle." Petition (-495) at 73.

-230 POR (Paper 25), 53-54.

DEMONSTRATIVE EXHIBIT — NOT EVIDENCE

Step 5 – Implement in Vehicle/Infotainment System

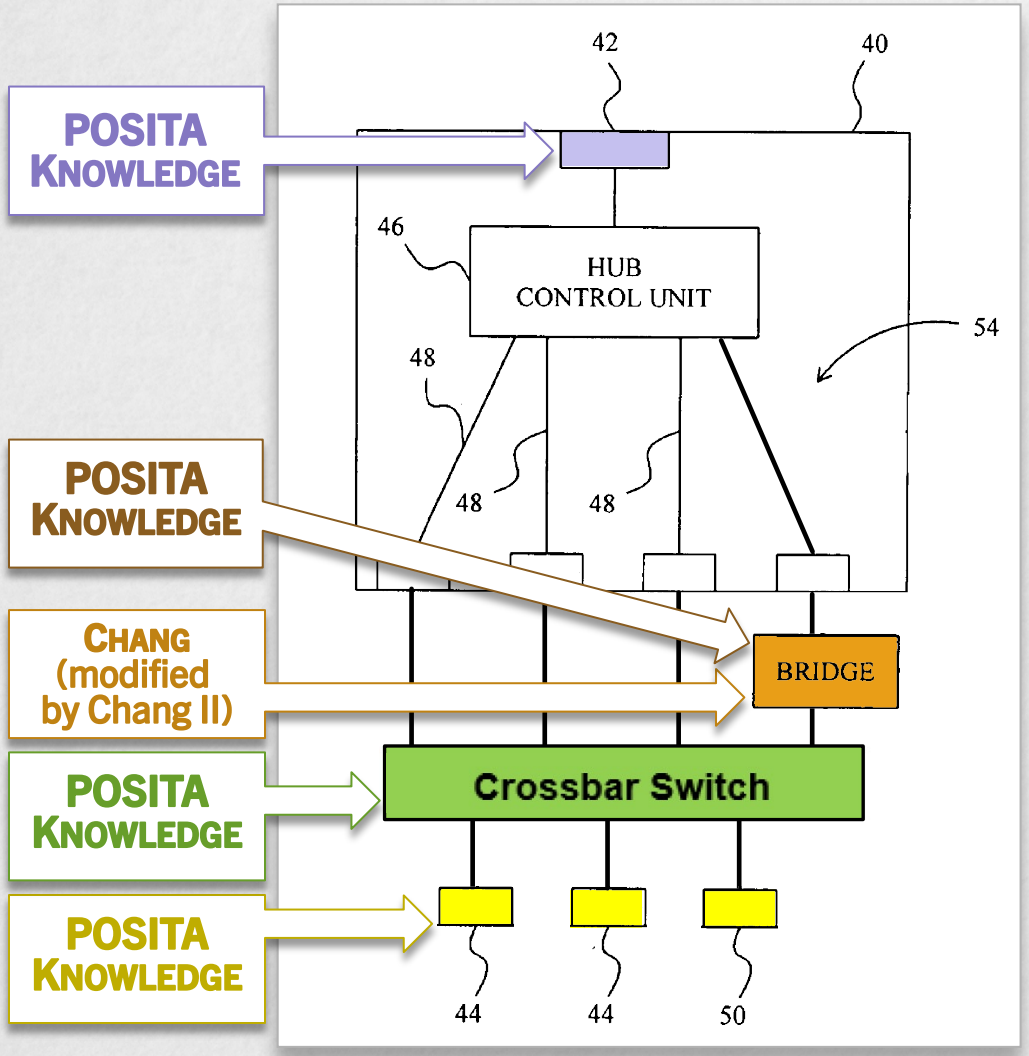

- "Chutorash's "vehicle control system 106" is located "within vehicle 100" and includes "a USB connector or interface" for connecting a "mobile phone," "PDA," and "media player" to an "embedded host." Petition (-495) at 75.
- "A POSITA would understand that, in a vehicle deployment like Chutorash, "vehicle control system 106" is the "Head Unit" (containing a central vehicle microcontroller) to which upstream port 42 in the Crossbar Implementations would connect." Petition (-495) at 75.

-230 POR (Paper 25), 53-54.

DEMONSTRATIVE EXHIBIT — NOT EVIDENCE

Step 6 – Simultaneous Communication From Downstream Host and Device

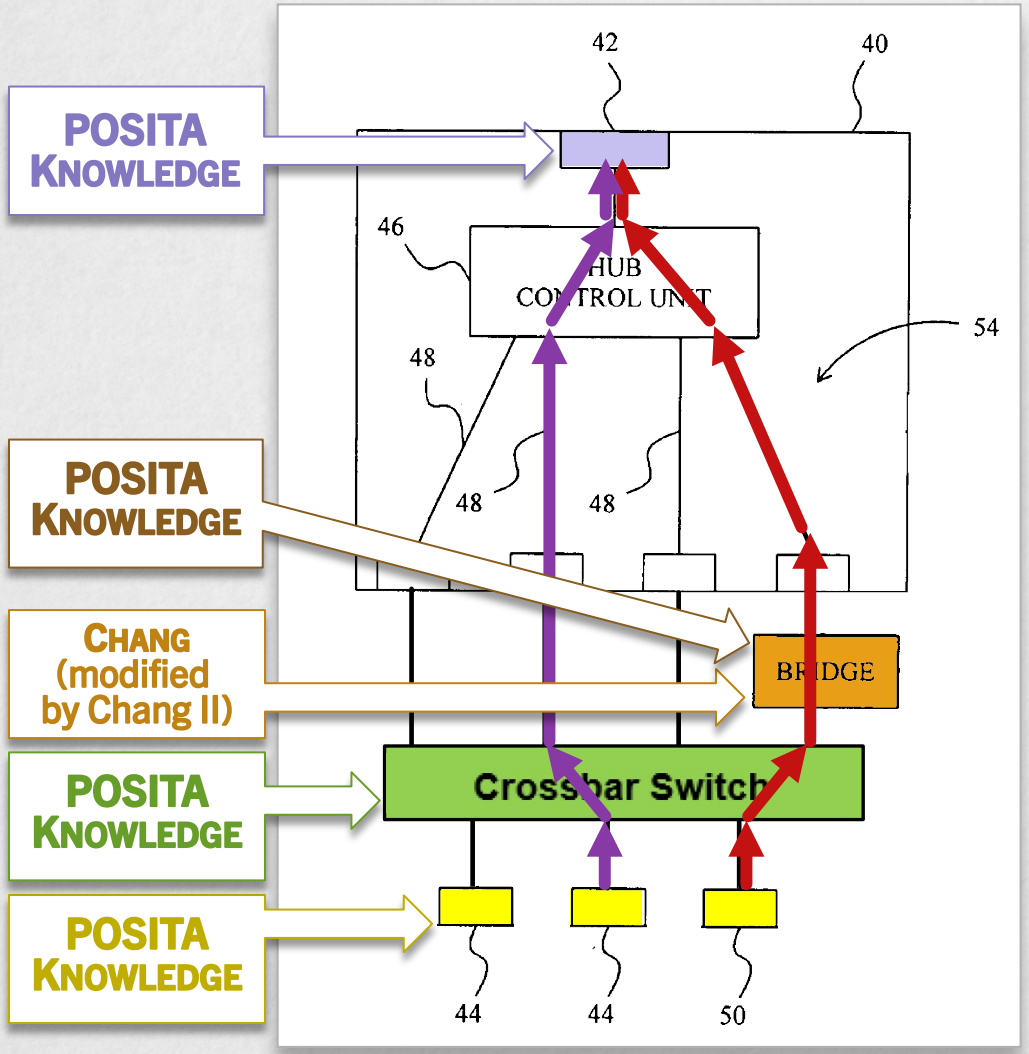

-495 POR (Paper 20), 47-51.

DEMONSTRATIVE EXHIBIT — NOT EVIDENCE

Step 6 – Simultaneous Communication From Downstream Host and Device

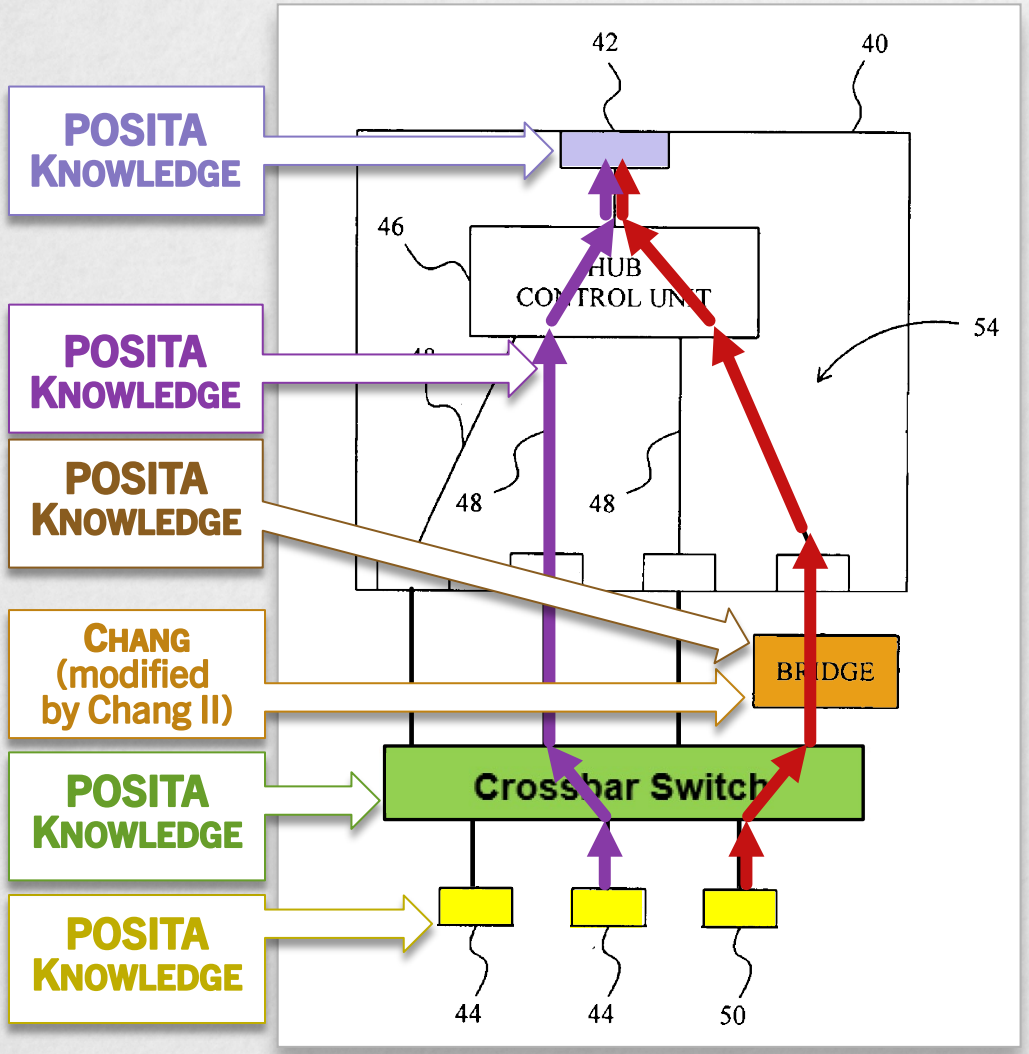

-495 POR (Paper 20), 47-51.

DEMONSTRATIVE EXHIBIT — NOT EVIDENCE

Step 6 – Simultaneous Communication From Downstream Host and Device

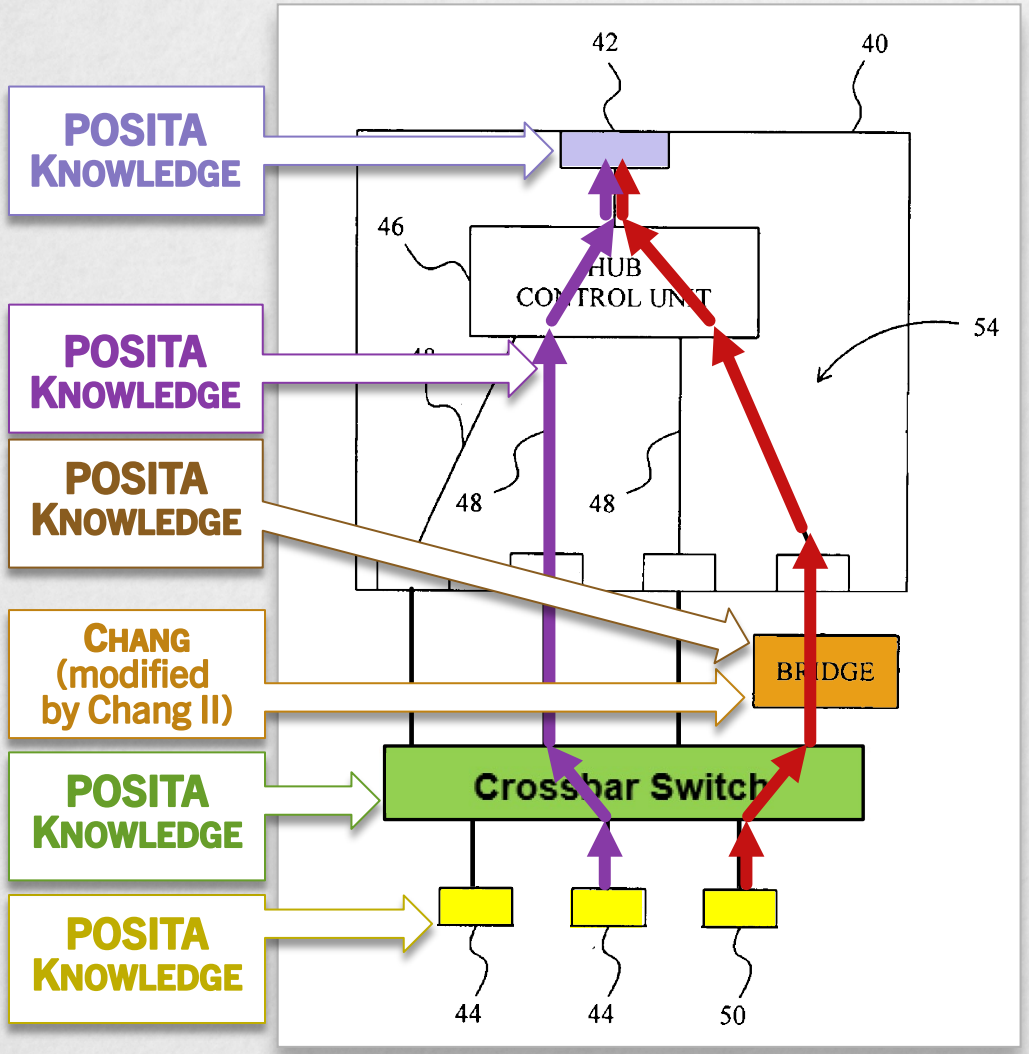

- "Thus, Ground 1's upstream host treats the host-to-host connection (viz., 'first communication path') as a host-device connection. This allows Ground 1's hub to simultaneously support multiple downstream connections (including a host-to-host connection)." Petition (-495) at 86.

-495 POR (Paper 20), 47-51.

DEMONSTRATIVE EXHIBIT — NOT EVIDENCE

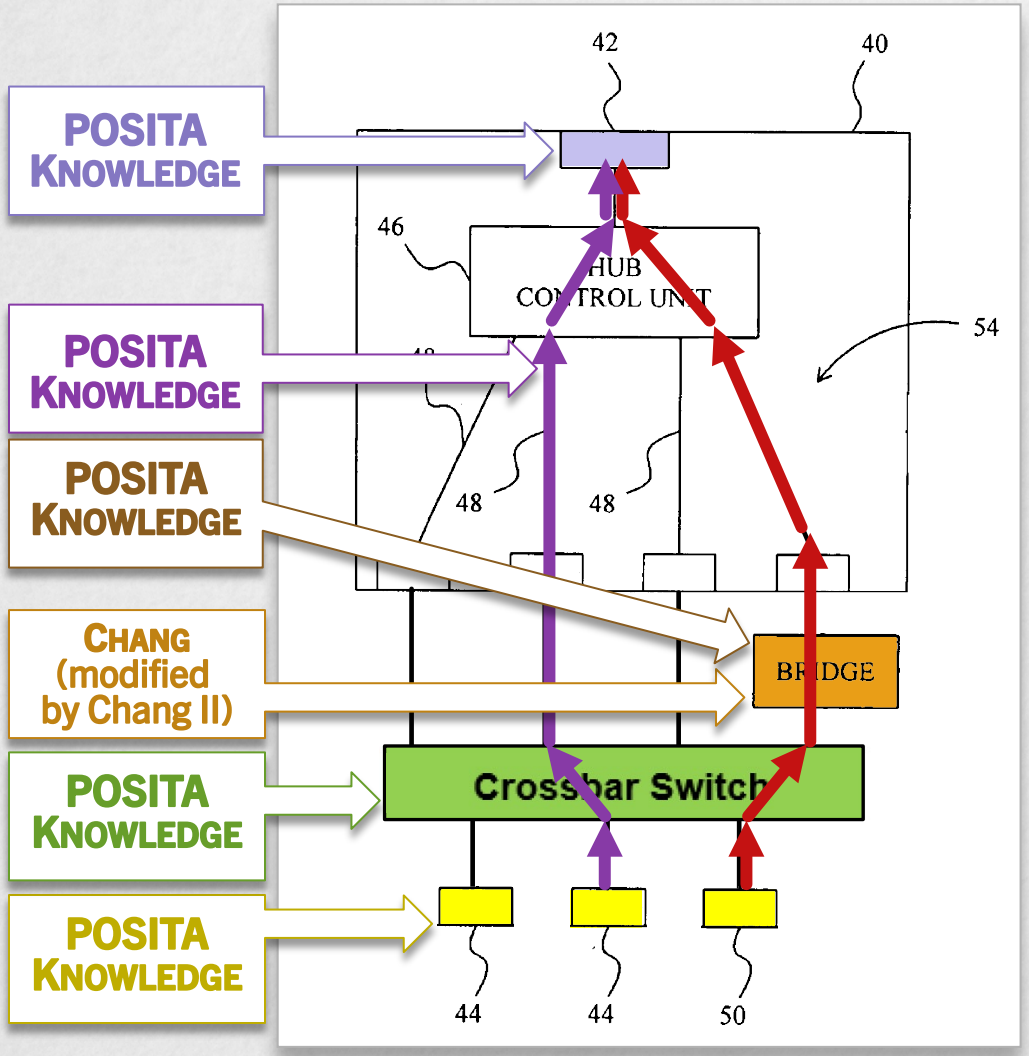

Petitioner's Modifications	Source
Modify Chang's 4 Dedicated Ports to be 3 Dual Role Ports	POSITA Knowledge
Add a Crossbar Between Bridge and Downstream Ports	POSITA Knowledge
Modify Chang's Bridge	Chang (Modified by Chang II)
Modify Detection Unit Algorithm	POSITA Knowledge
Implement in Vehicle/Infotainment System	POSITA Knowledge
Simultaneous Communication From Downstream Host & Device	POSITA Knowledge

-228 POR (Paper 25), 16-18, 13-14, 23-24, 57-61; -230 POR (Paper 25), 53-54; -495 POR (Paper 20), 47-51.

DEMONSTRATIVE EXHIBIT — NOT EVIDENCE

The "Dead-End" Problem

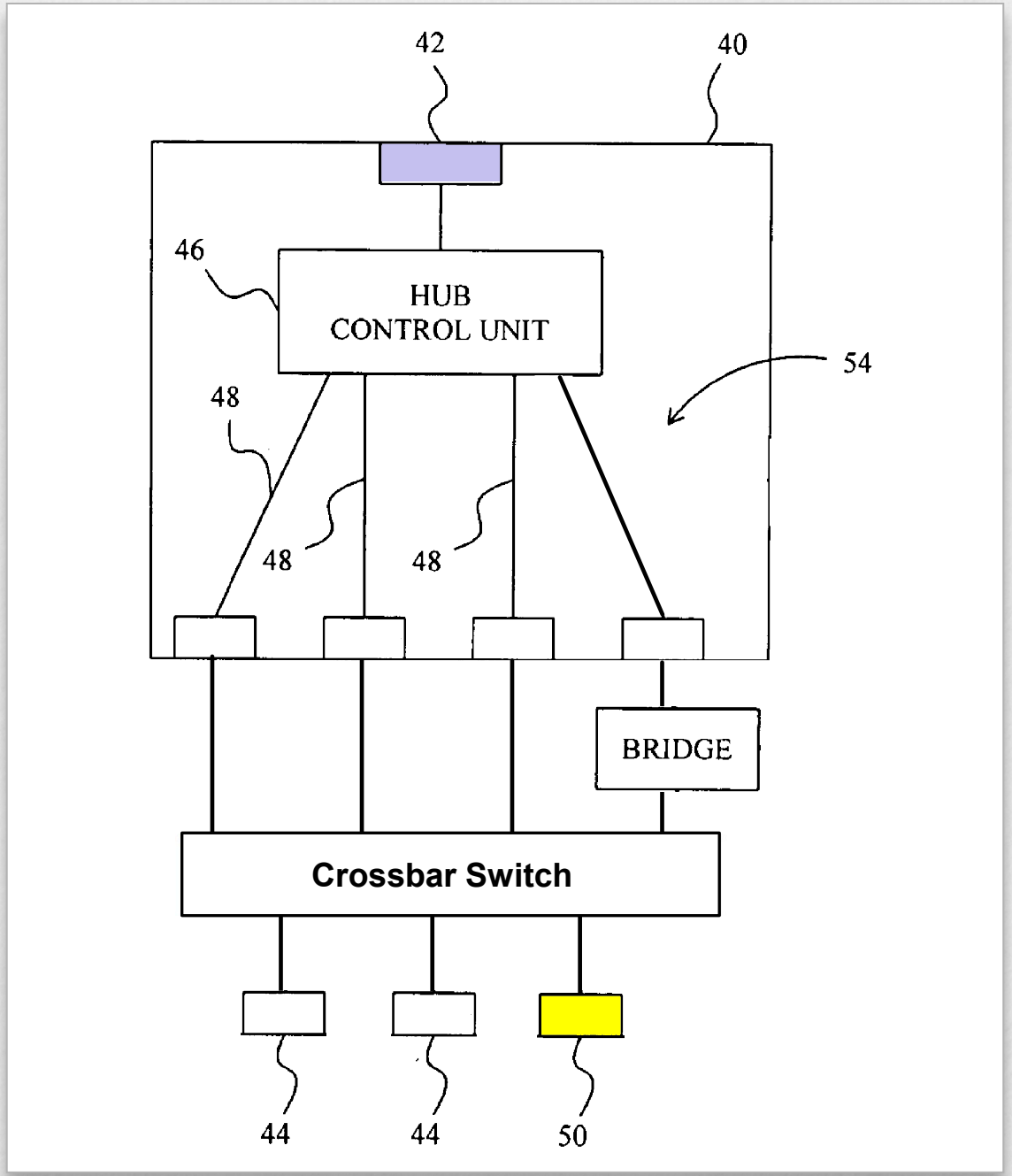

Declaration of Eric Welch, Fig. 3 (modified and annotated)

-228 POR (Paper 25), 23-34.

DEMONSTRATIVE EXHIBIT — NOT EVIDENCE

The "Dead-End" Problem

HOST mode

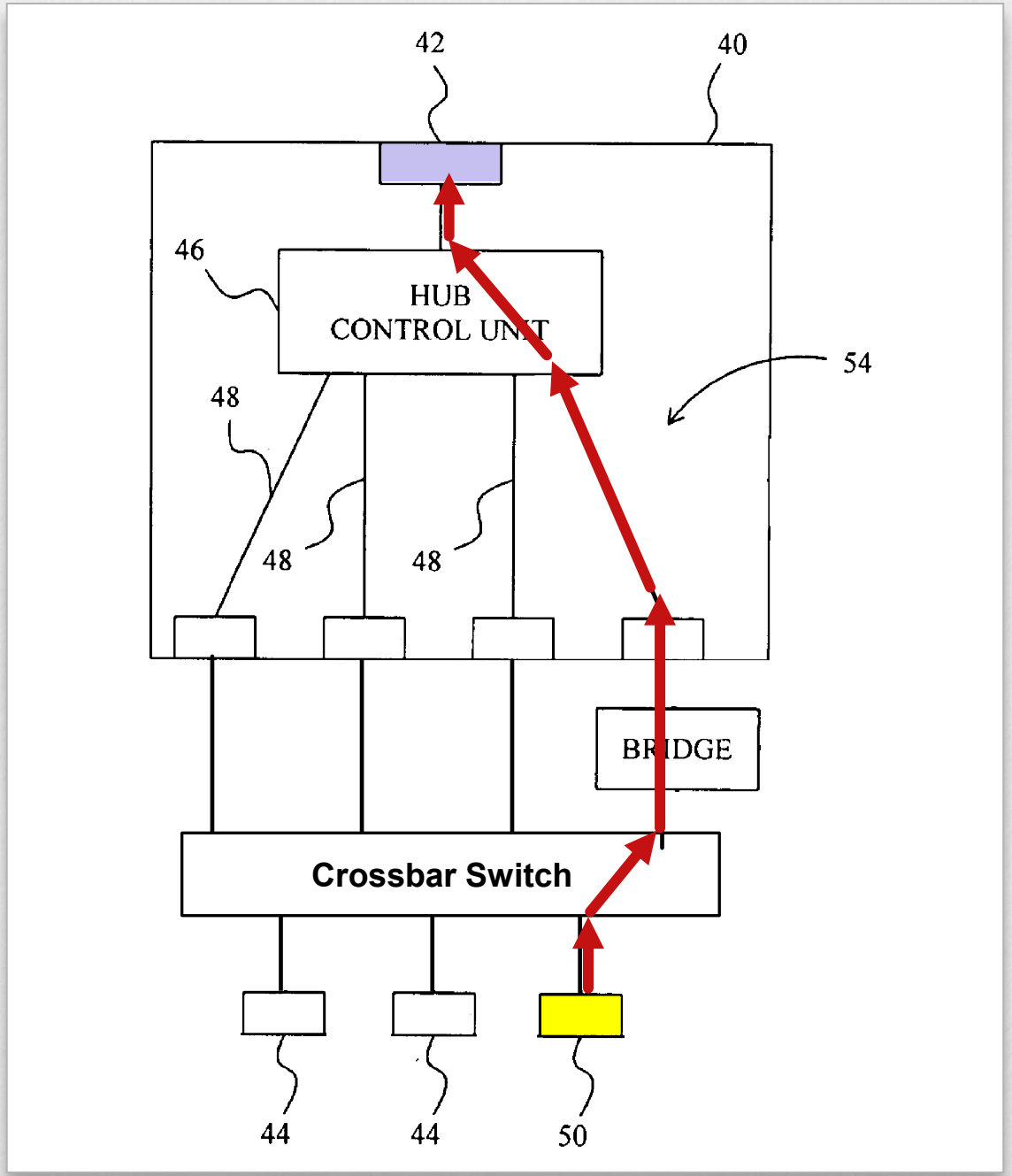

Declaration of Eric Welch, Fig. 3 (modified and annotated)

-228 POR (Paper 25), 23-34.

DEMONSTRATIVE EXHIBIT — NOT EVIDENCE

The "Dead-End" Problem

DEVICE mode

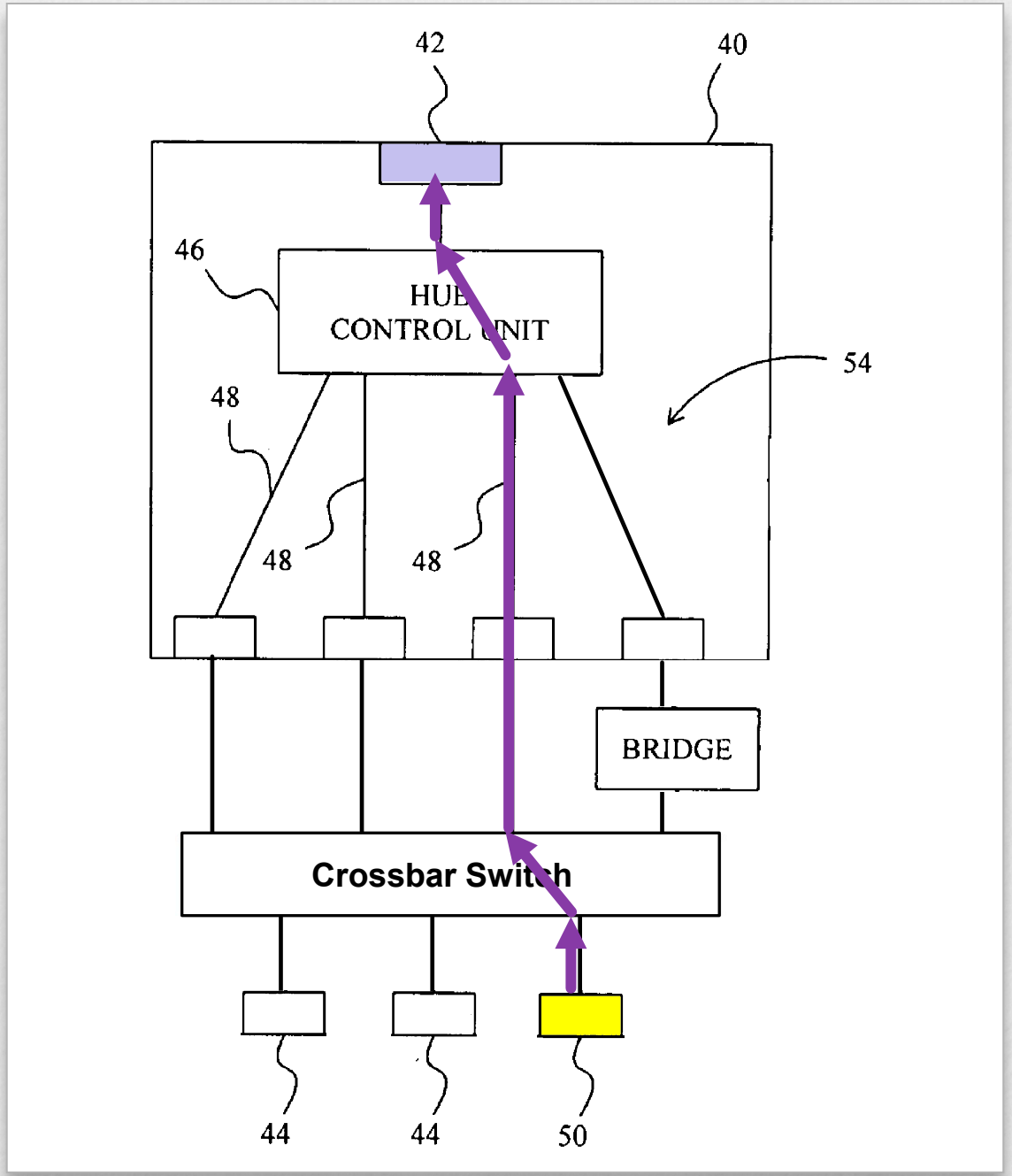

Declaration of Eric Welch, Fig. 3 (modified and annotated)

-228 POR (Paper 25), 23-34.

DEMONSTRATIVE EXHIBIT — NOT EVIDENCE

The "Dead-End" Problem

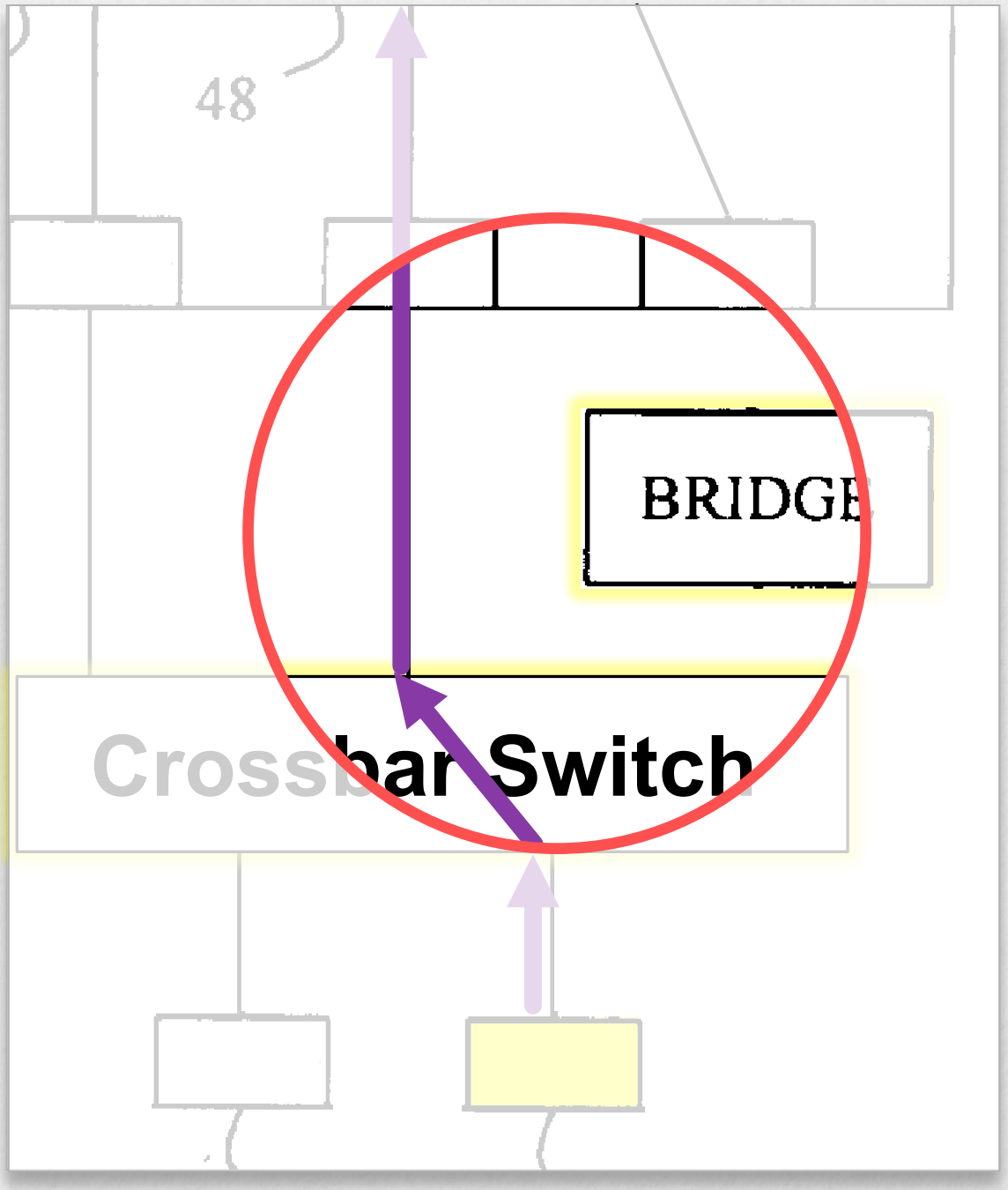

Bridge Electrically Disconnected

Declaration of Eric Welch, Fig. 3 (modified and annotated)

-228 POR (Paper 25), 23-34.

DEMONSTRATIVE EXHIBIT — NOT EVIDENCE

Step 7A – Modify Detection Unit to Monitor Downstream Ports

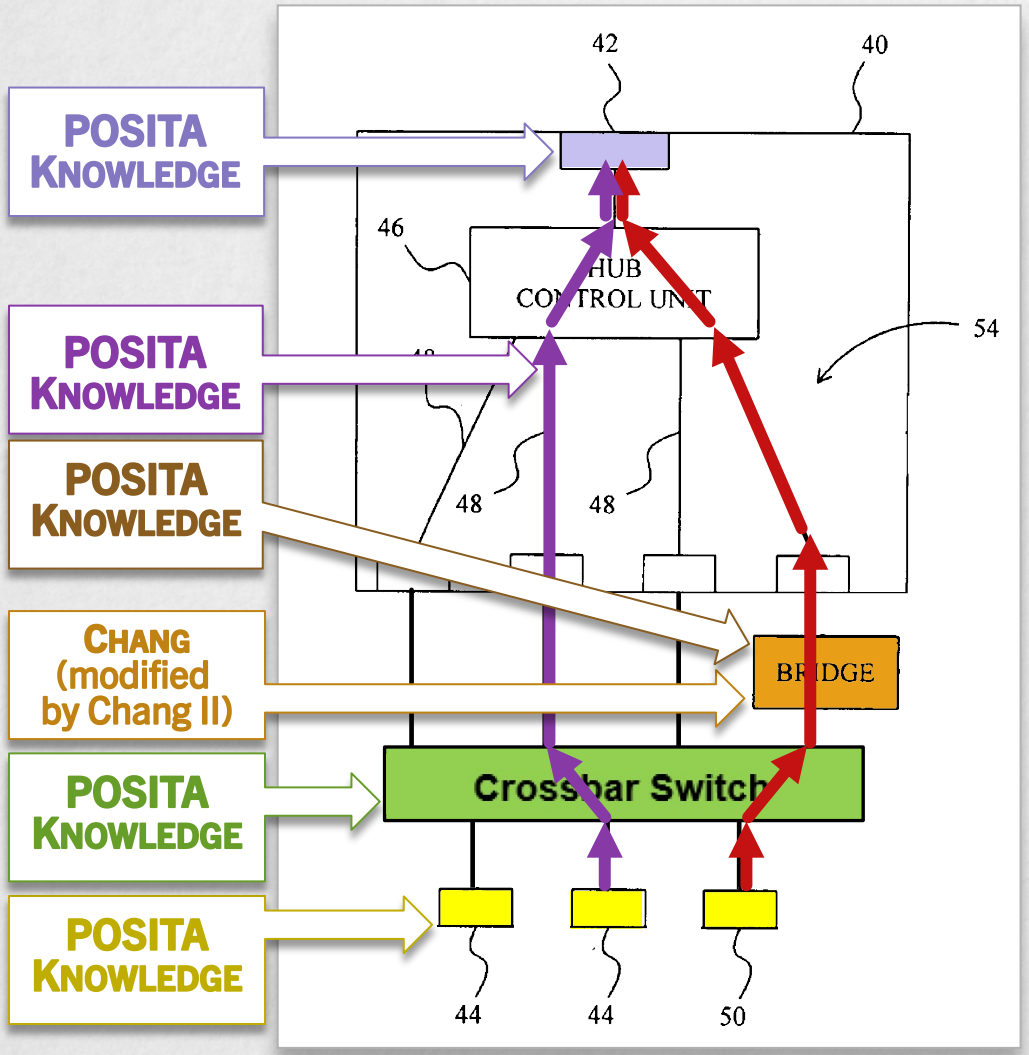

-228 Sur-Reply (Paper 40), 13-17.

DEMONSTRATIVE EXHIBIT — NOT EVIDENCE

Step 7A – Modify Detection Unit to Monitor Downstream Ports

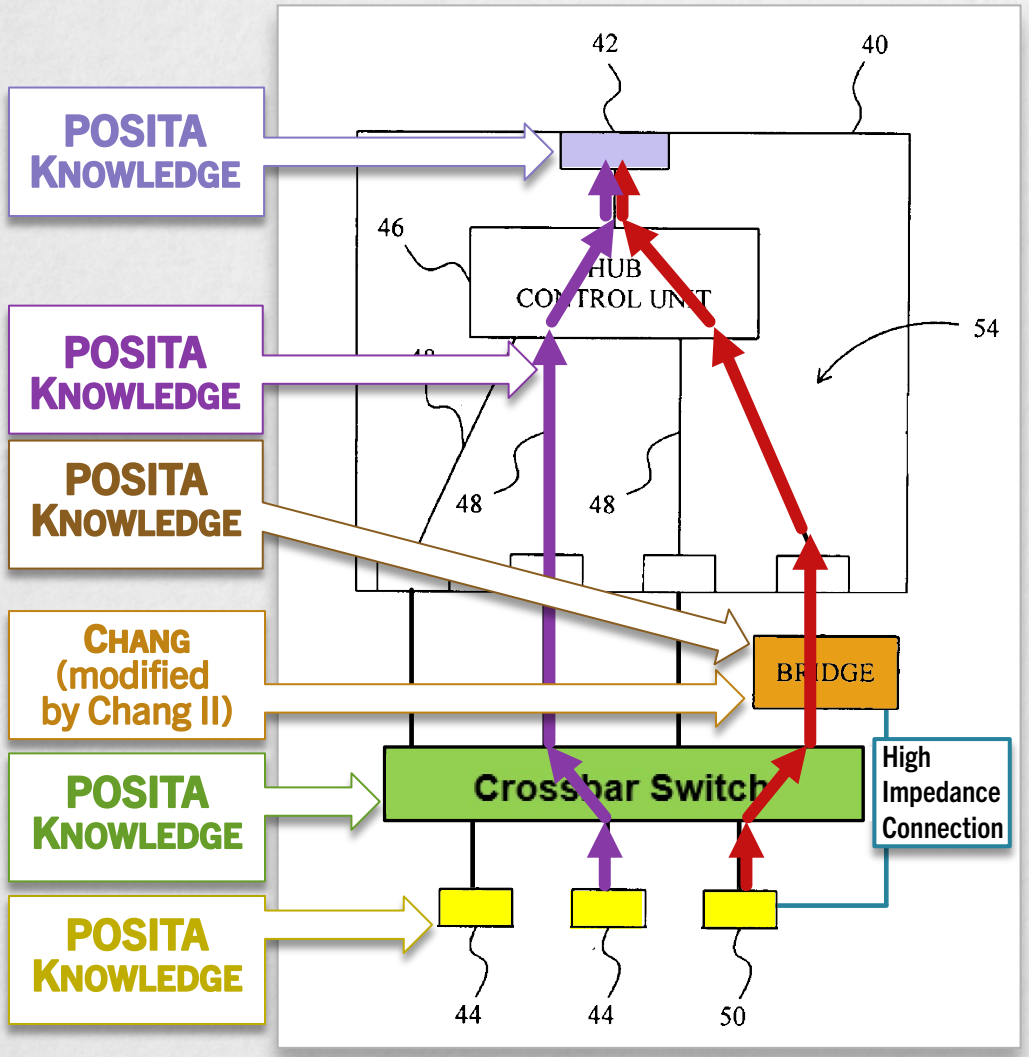

-228 Sur-Reply (Paper 40), 13-17.

DEMONSTRATIVE EXHIBIT — NOT EVIDENCE

Step 7A – Modify Detection Unit to Monitor Downstream Ports

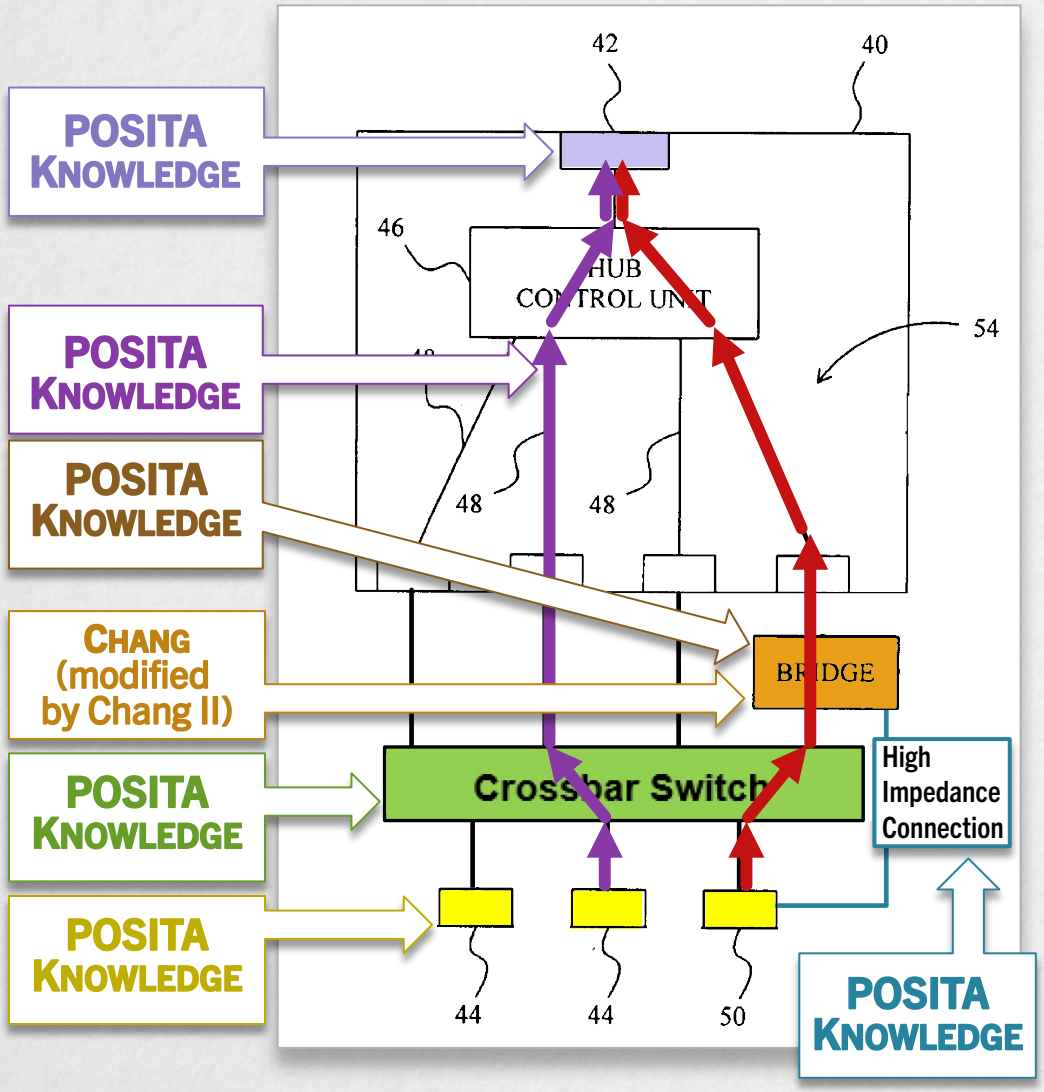

-228 Sur-Reply (Paper 40), 13-17.

DEMONSTRATIVE EXHIBIT — NOT EVIDENCE

Step 7A – Modify Detection Unit to Monitor Downstream Ports

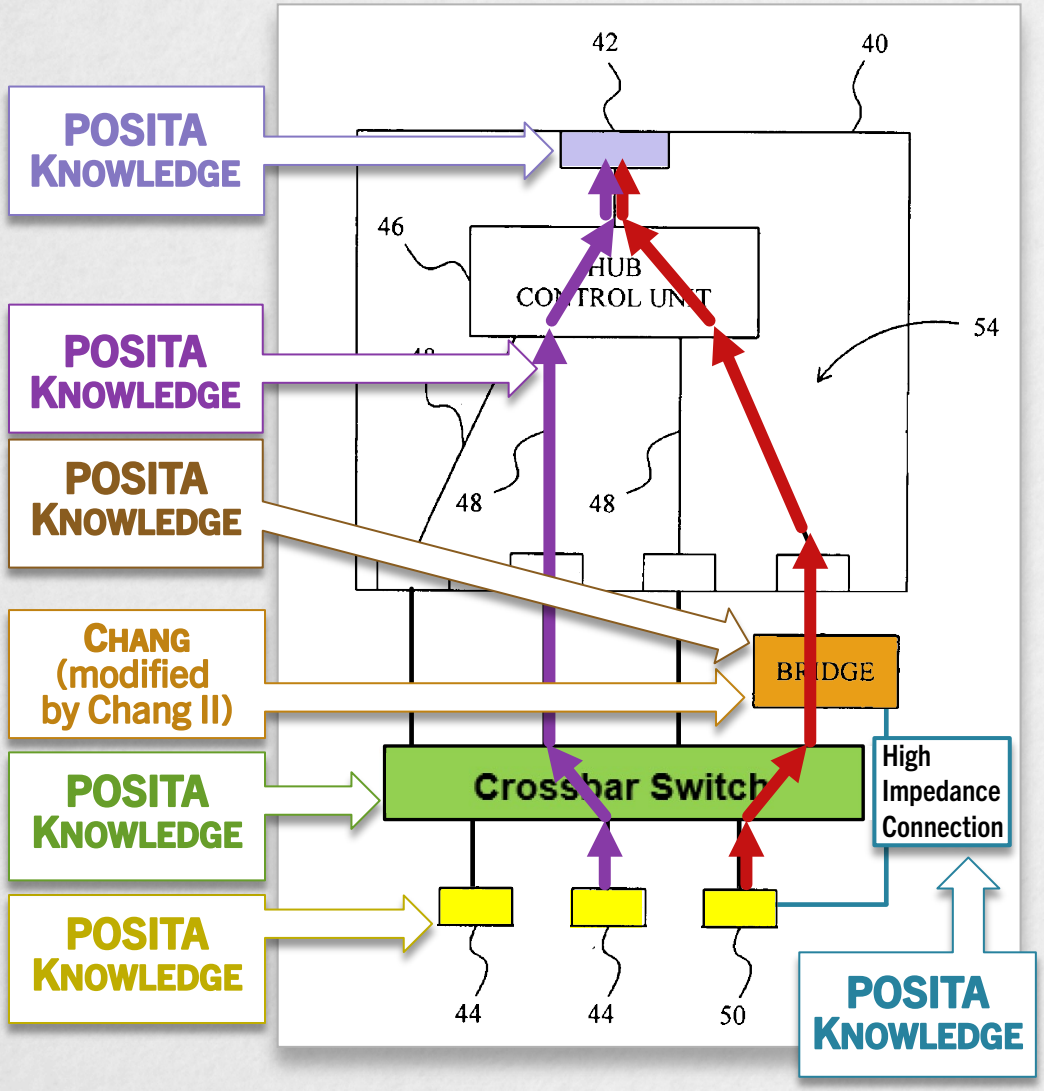

Q. So it's not just moving the detection unit to a different location, you've also got to make sure you add a high impe[dance] passive connection to the downstream port; right?

A. Yes, that's right. In this case, we're talking about the detection unit having direct access to the external port signals. But in a non-interfering way.

EX2048 at 103:20-104:3.

-228 Sur-Reply (Paper 40), 10-11, 13-17.

DEMONSTRATIVE EXHIBIT — NOT EVIDENCE

Step 7B – Modify Head Unit to Monitor Downstream Ports

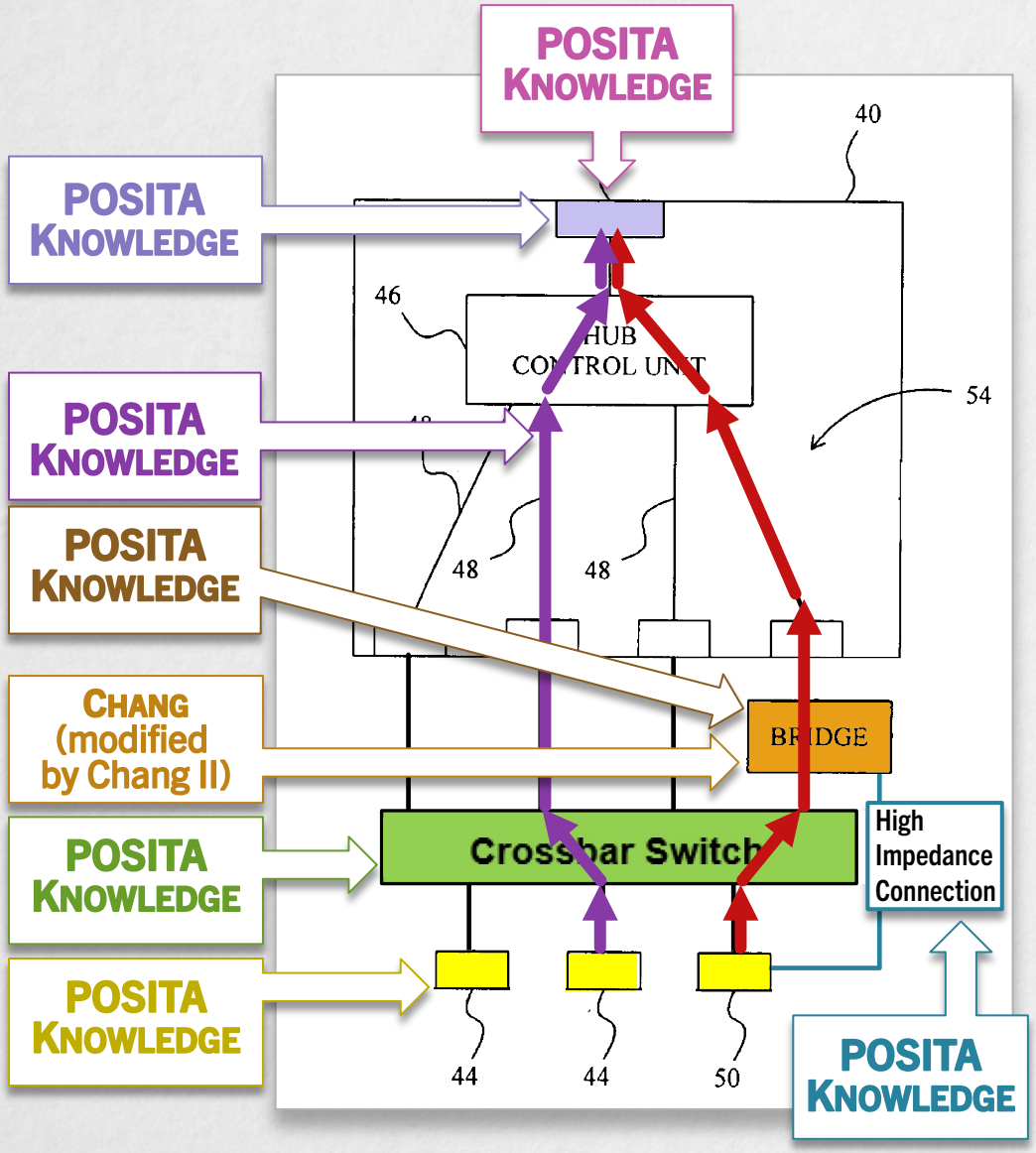

-228 Sur-Reply (Paper 40), 13-17.

DEMONSTRATIVE EXHIBIT — NOT EVIDENCE

Step 7B – Modify Head Unit to Monitor Downstream Ports

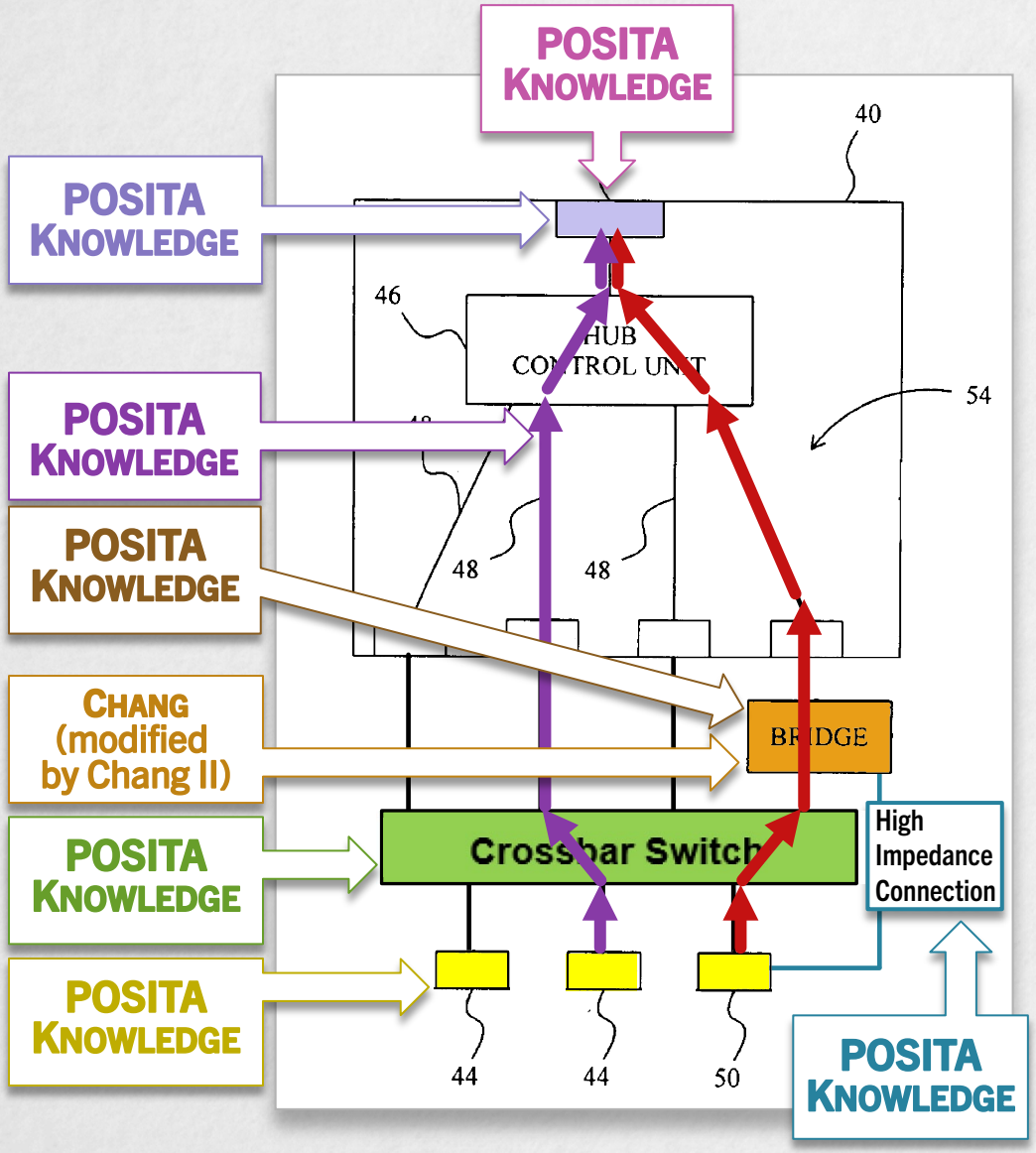

- "Accordingly, when a connection is closed, the headend will know about it and can use this information (e.g., the SEO signaling which acts as a 'reset') to notify the mux/crossbar to revert to a default state in which it routes the incoming USB signal to the bridge where the detection unit can then process it."
  EX1102 at ¶ 52.

-228 Sur-Reply (Paper 40), 13-17.

DEMONSTRATIVE EXHIBIT — NOT EVIDENCE

Step 7B – Modify Head Unit to Monitor Downstream Ports

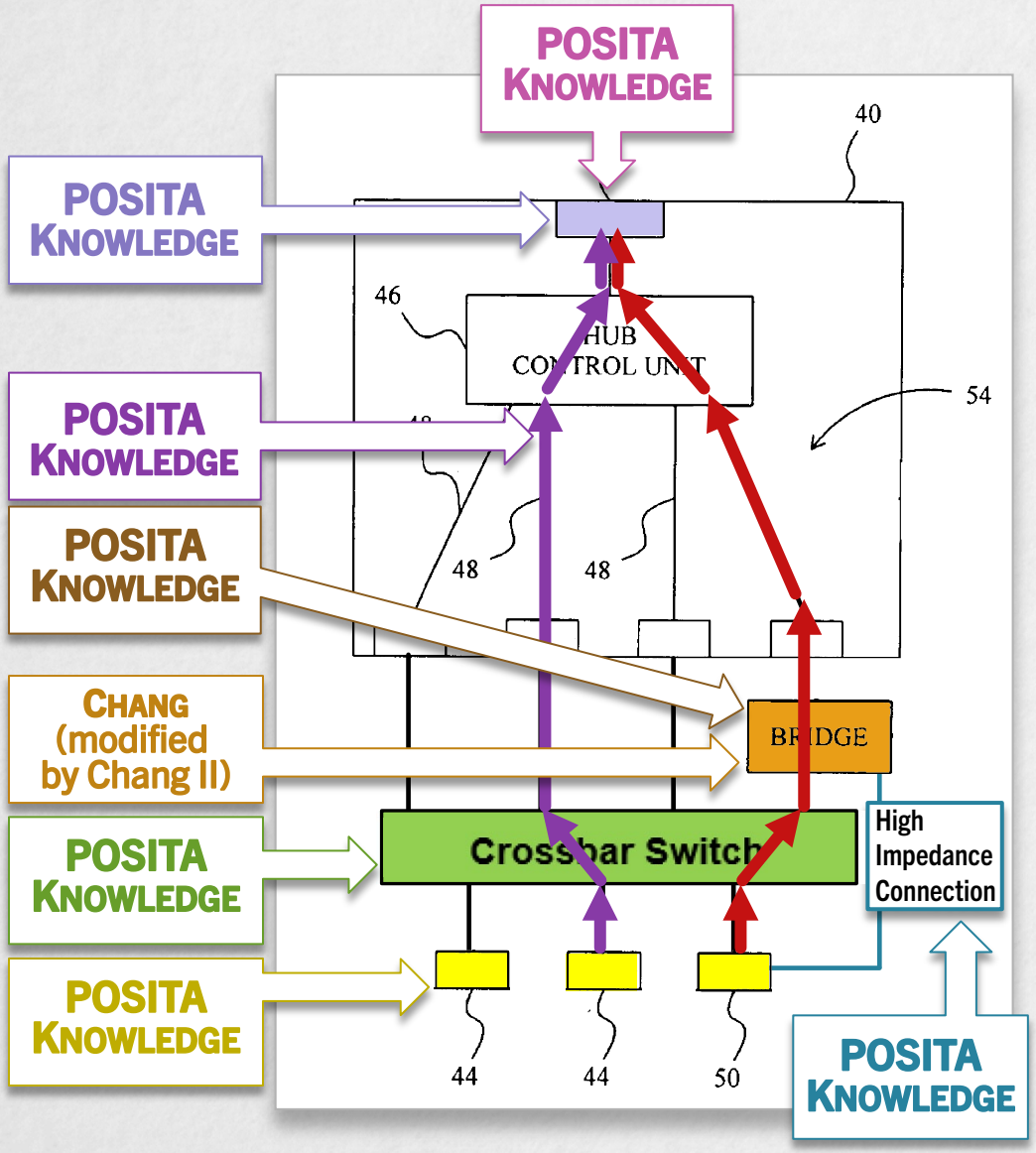

Q. You mentioned that you could have the control logic originating from the head end unit?

A. Uh-huh.

EX2048 at 110:17-19.

-228 Sur-Reply (Paper 40), 13-17.

DEMONSTRATIVE EXHIBIT — NOT EVIDENCE

Step 7B – Modify Head Unit to Monitor Downstream Ports

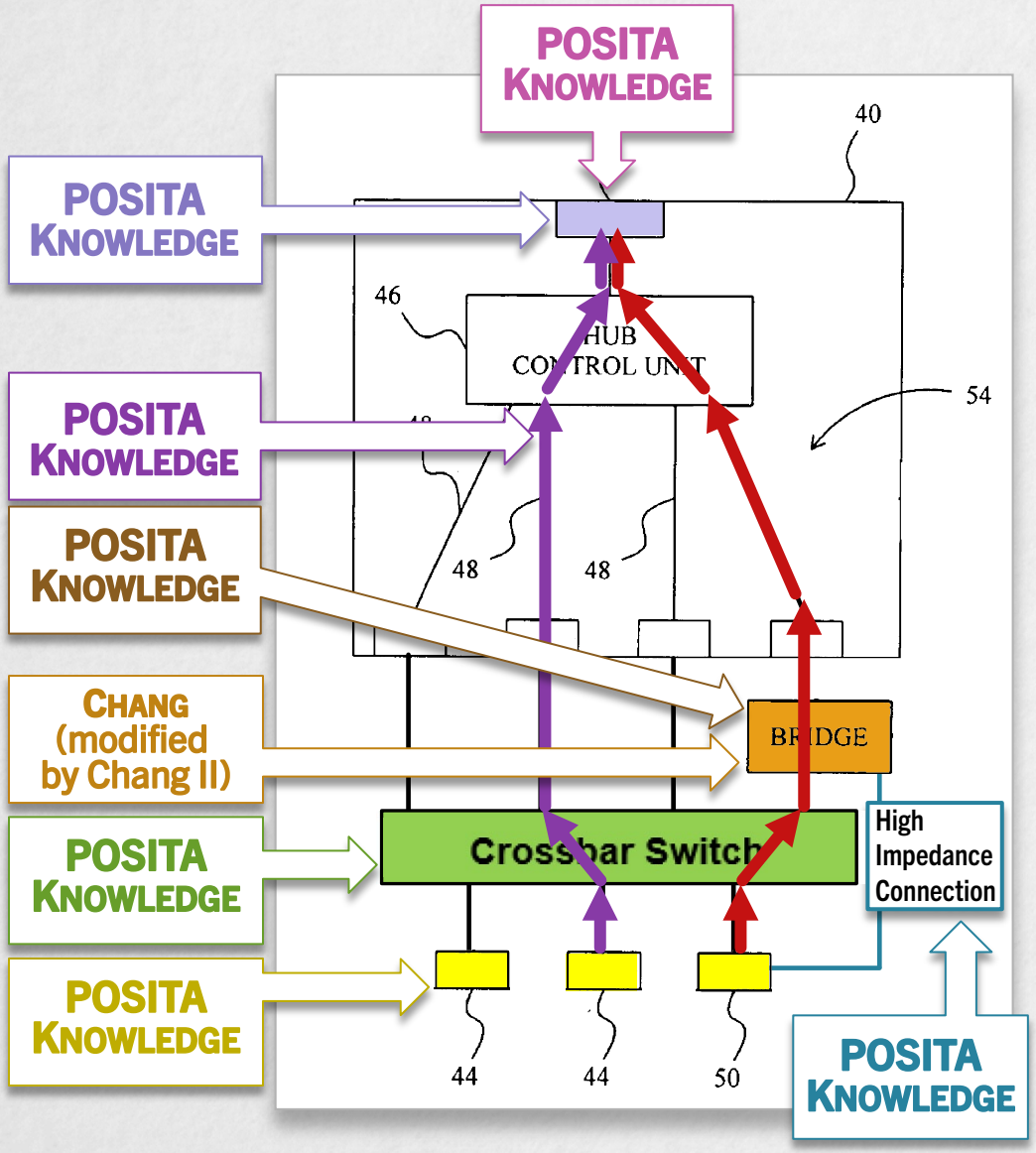

Q. Okay. But you would agree with me that the POSITA would need to program the head end upstream host to generate this signal, and also program the MUX crossbar to respond to that signal in some way; right?

A. Yeah, in general, that's true.

EX2048 at 123:6-13.

-228 Sur-Reply (Paper 40), 13-17.

DEMONSTRATIVE EXHIBIT — NOT EVIDENCE

Step 7B – Modify Head Unit to Monitor Downstream Ports

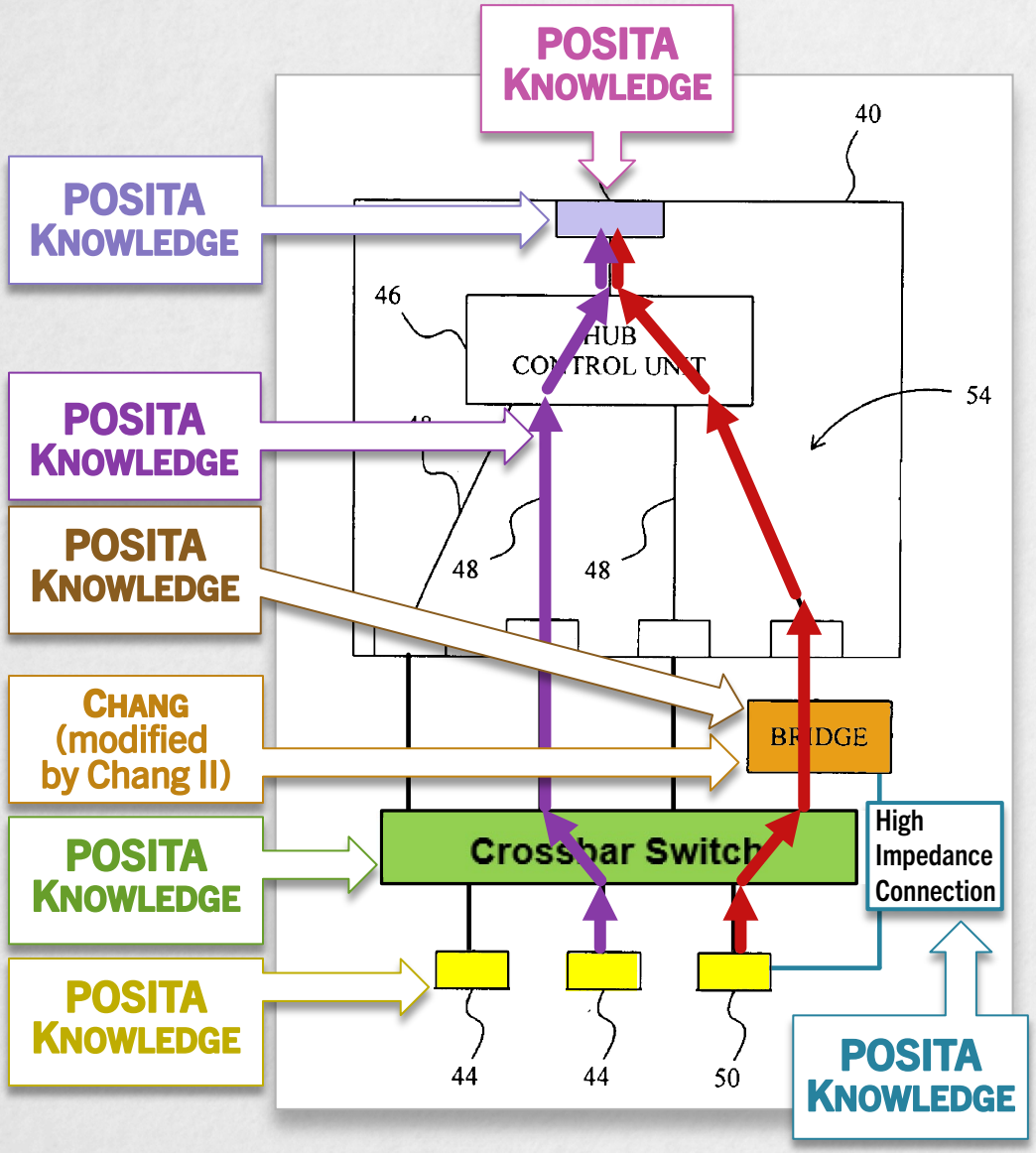

Q. Okay. And Chang 1 and Chang 2 don't refer to the head end unit controlling a or MUX or crossbar?

A. They don't use that term, no.

EX2048 at 111:1-4.

-228 Sur-Reply (Paper 40), 13-17.

DEMONSTRATIVE EXHIBIT — NOT EVIDENCE

Step 8 – Add Signaling to Provide Simultaneous Communication With No Interruption

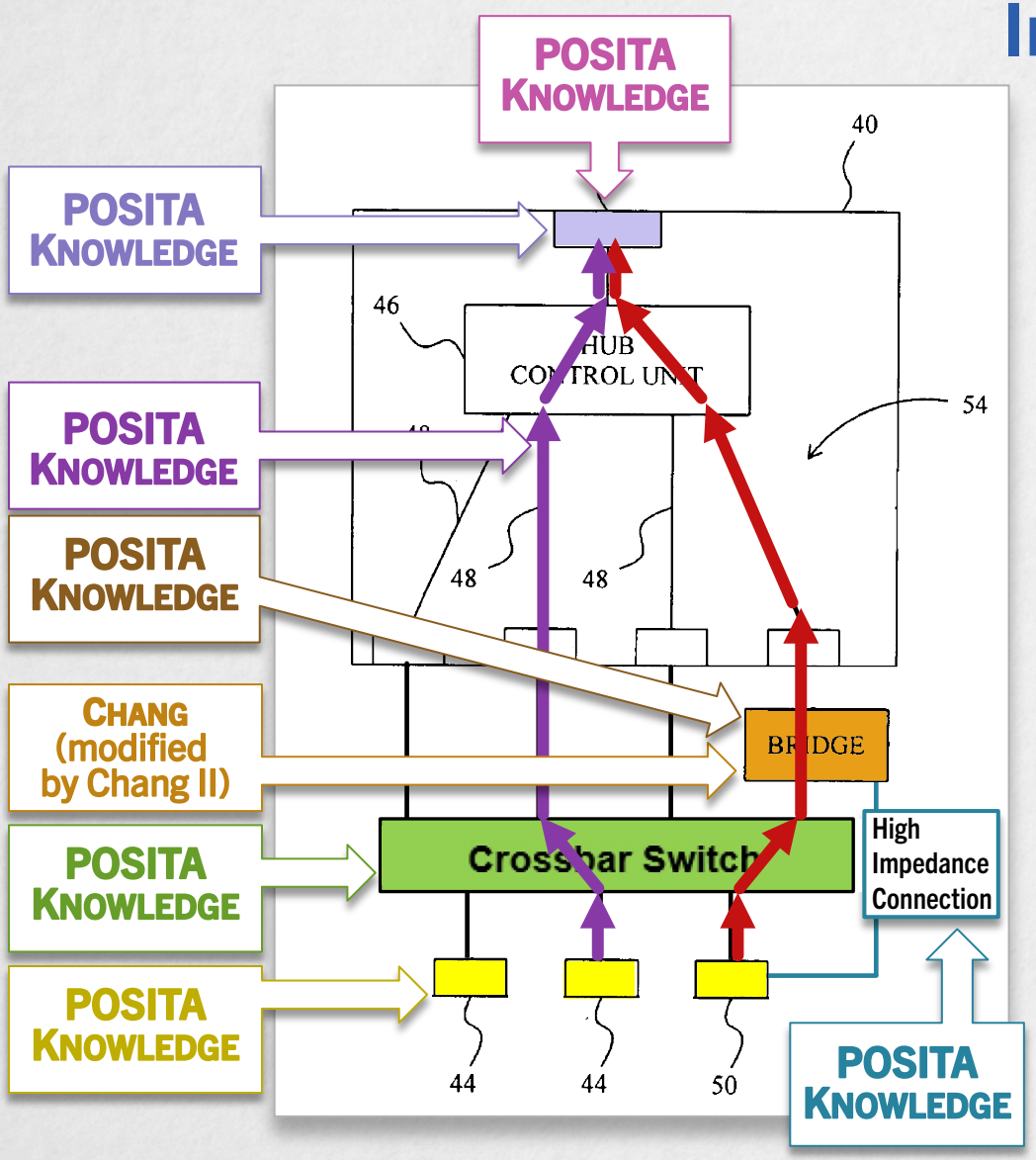

-228 Sur-Reply (Paper 40), 13-17.

DEMONSTRATIVE EXHIBIT — NOT EVIDENCE

Step 8 – Add Signaling to Provide Simultaneous Communication With No Interruption

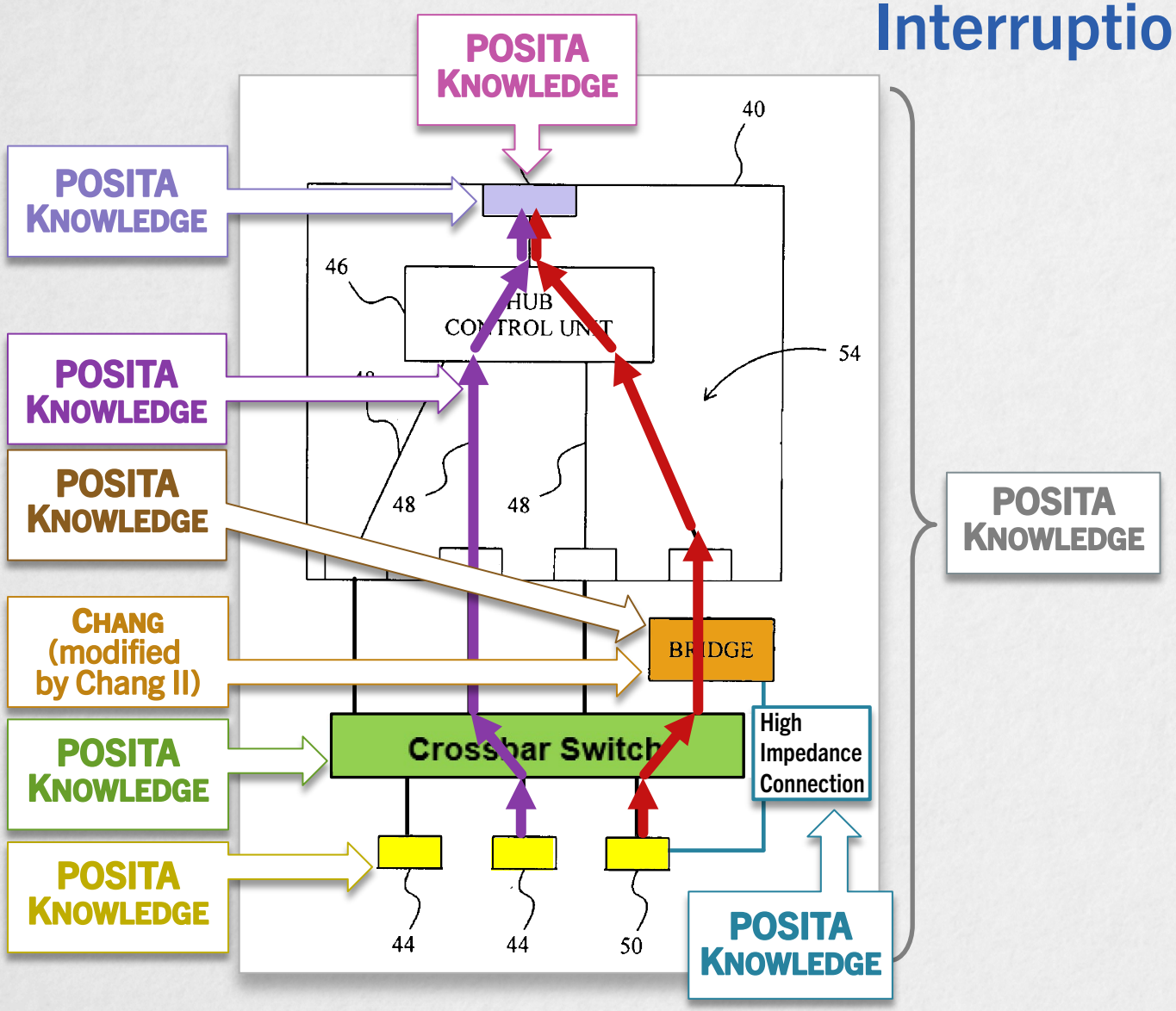

-228 Sur-Reply (Paper 40), 13-17.

DEMONSTRATIVE EXHIBIT — NOT EVIDENCE

Step 8 – Add Signaling to Provide Simultaneous Communication With No Interruption

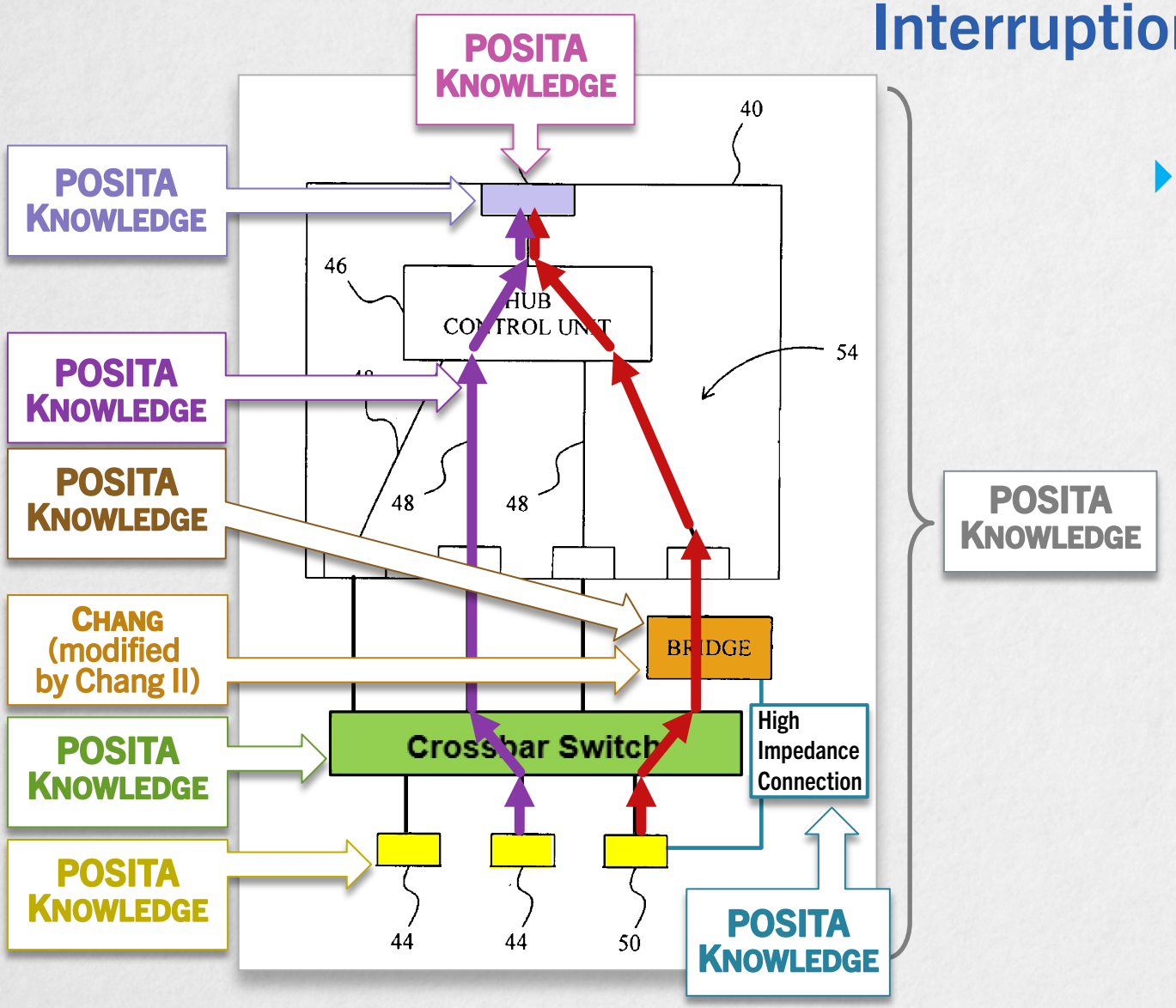

- "Only one slight difference applies to the Crossbar Implementations, which is that any reset signaling would respect (i.e., not disconnect) an existing host-to-host connection. This could be easily accomplished using basic logic such as the extremely well-known 'if' condition, which is trivial to implement in either hardware or software (which one to use is merely a design choice)." EX1102 at ¶ 55

-228 Sur-Reply (Paper 40), 13-17.

DEMONSTRATIVE EXHIBIT — NOT EVIDENCE

Proposed Modifications

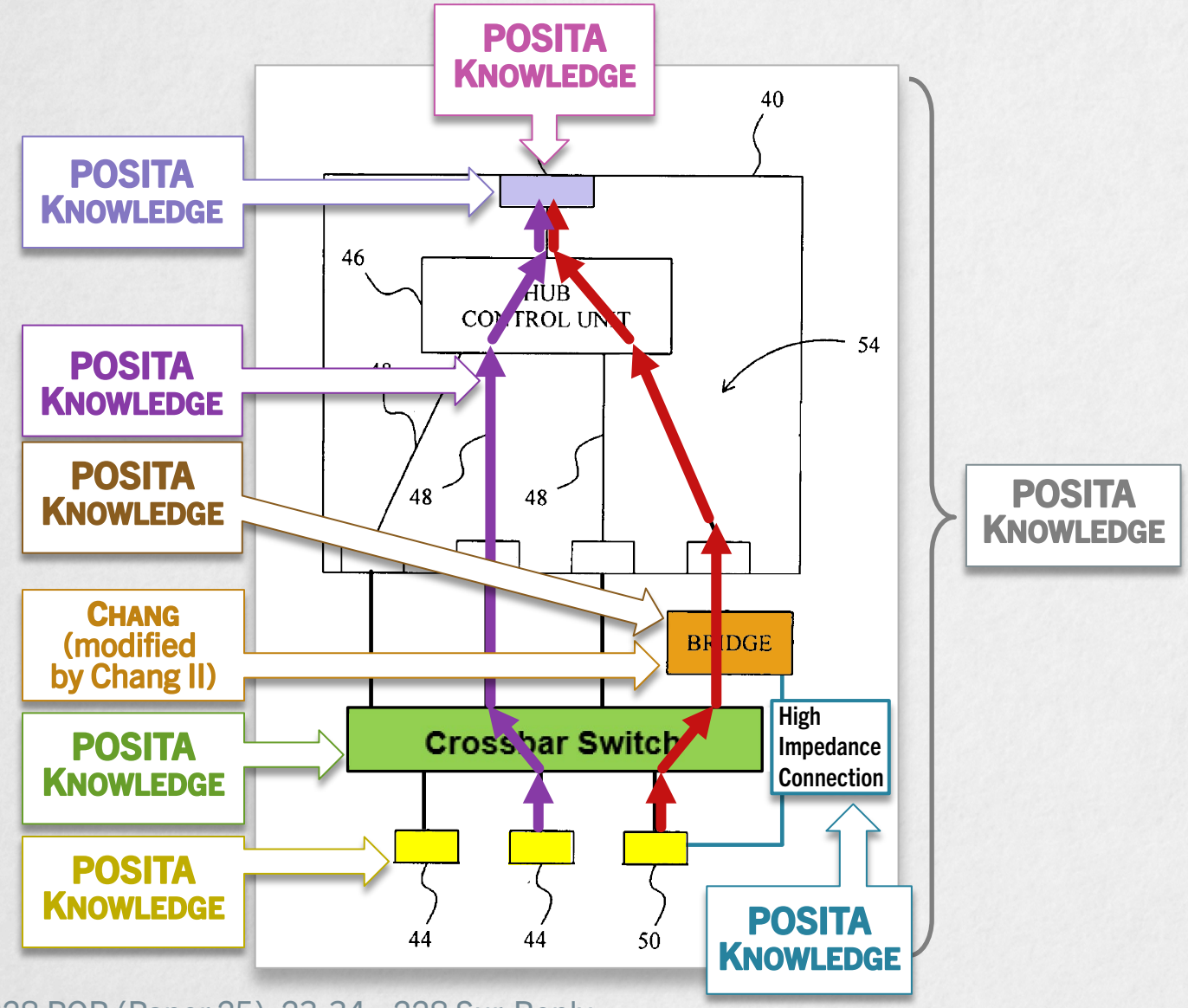

Petitioner's Modifications	Source
Modify Chang's 4 Dedicated Ports to be 3 Dual Role Ports	POSITA Knowledge
Add a Crossbar Between Bridge and Downstream Ports	POSITA Knowledge
Modify Chang's Bridge	Chang (Modified by Chang II)
Modify Detection Unit Algorithm	POSITA Knowledge
Implement in Vehicle/Infotainment System	POSITA Knowledge
Simultaneous Communication From Downstream Host & Device	POSITA Knowledge
Modify detection unit to monitor downstream ports*	POSITA Knowledge
Modify head unit to monitor downstream ports*	POSITA Knowledge
Add Signaling to Provide Simultaneous Communication With No Interruption*	POSITA Knowledge

*Petitioner's Newly-Proposed Modifications

-228 POR (Paper 25), 23-34; -228 Sur-Reply (Paper 40), 13-17.

DEMONSTRATIVE EXHIBIT — NOT EVIDENCE

Eric Welch
Petitioner's Expert

Q. What type of signal is the head end upstream host sending the MUX crossbar in this example you provide in Paragraph 52?

A. It's an implementation detail. But an example could be that the embedded host has some GPIO lines available and it can connect directly to some of the logic elements in the collection of multiplexor, bridge, and other components.

EX2048 at 122:23-123:5.

-228 Sur-Reply (Paper 40), 6-7, 16-17, 20-24.

DEMONSTRATIVE EXHIBIT — NOT EVIDENCE

Eric Welch
Petitioner's Expert

Q. What is the -- once the detection circuit performs its function, it detects what type of device is in a downstream port, where does it send that information to?

A. Well, this is an implementation detail, but a POSITA would understand that one way to do that is to control the select lines on a switch or a MUX or a crossbar so that the port where you've performed the detection is routed as appropriate, either to the bridge or around the bridge directly to a port on the hub.

EX2048 at 92:14-24.

-228 Sur-Reply (Paper 40), 6-7, 16-17, 20-24.

DEMONSTRATIVE EXHIBIT — NOT EVIDENCE

Eric Welch
Petitioner's Expert

Q. So in that scenario, the detection unit itself would have the software or hardware necessary to generate that control signal from the MUX?

A. For example, yes, that would be -- that could be one way of doing it.

EX2048 at 92:25-93:4.

-228 Sur-Reply (Paper 40), 6-7, 16-17, 20-24.

DEMONSTRATIVE EXHIBIT — NOT EVIDENCE

Eric Welch
Petitioner's Expert

Q. Okay. My question is just in this particular way that it's drawn, what is does it mean to be -- for the detection unit to be associated with the MUX?

A. That's mostly an implementation detail, but again, if you're doing this with discrete parts and you're going to use, for example, an off-the-shelf bridge, and for example, an off-the-shelf hub chip, you could build up a combined MUX or crossbar that has detection circuitry in it as one discrete device.

It could be a very simple ASIC, and in that case, it wouldn't be unreasonable to say the detection unit is associated with the MUX.

EX2048 at 94:19-95:6.

-228 Sur-Reply (Paper 40), 6-7, 16-17, 20-24.

DEMONSTRATIVE EXHIBIT — NOT EVIDENCE

Eric Welch
Petitioner's Expert

Q. Right. And so you have to have an additional connection that's direct to the downstream port from the detection circuit in this embodiment; right?

A. I wouldn't say that it has to be separate. Only what I've said here, I stick by. It needs a connection. It doesn't have to be separate. It could be shared in some way. Those are implementation details that I am not trying to nail down here.

EX2048 at 104:5-104:15.

-228 Sur-Reply (Paper 40), 6-7, 12-13, 16-17, 20-24.

Eric Welch

Petitioner's Expert

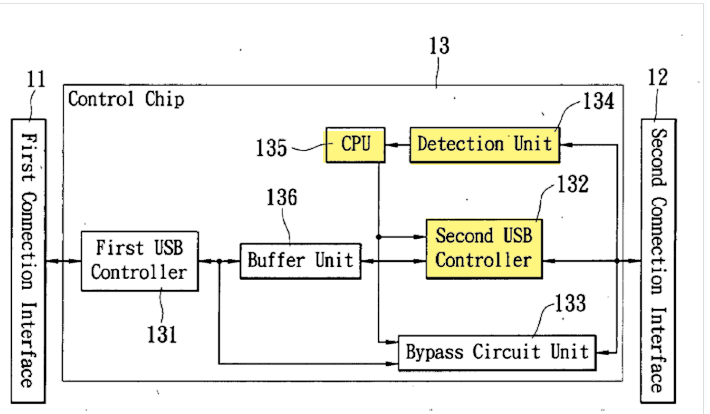

FIG. 5

Q. Okay. And what is your understanding as to why the CPU would also send a signal from the detection unit to the block labeled 132?

A. Okay. Rather than guessing, paragraph 39, I think answers that question. Detection unit 134 -- sorry. That's the wrong part of it.

Okay. "Detection unit 134 will produce a bridging detection signal which causes the CPU 135 to activate the second USB in controller 132 for operation according to the bridging detection signal, thus making it possible for the second USB controller and first USB controller to be achieved."

I read that as meaning when the CPU has figured out the downstream device is a host, that the CPU causes the appropriate things to be done, including turning on the unit 134 and causing it to sort of insert itself into the -- into the switch. I don't know that. That's just plausible. It's not certain.

EX2021 at 283:4-23

-228 POR (Paper 25), 51-52.

DEMONSTRATIVE EXHIBIT — NOT EVIDENCE

June 18, 2014

From: Orlosky, Mark
Sent: Wednesday, June 18, 2014 12:55 PM MDT
To: Brigham Steele - C21902
Subject: RE: CarPlay and forced DCP to external ports

Brigham

I understand what you say about the big picture. USB will support multiple streams from the data lanes but with one and only one Host. In the discussed scenario a nonmusic app is runni
allows another media stream to also play except the Apple device is one to one w
with all other lanes ignored. I think the disconnect is the difference between mult
CarPlay non CarPlay reversal will still be only as capable as the new Host. If it had
the other ports fine and the processing power to handle the audio codec required
be serviced by the Host in the manner Dave wants to see. One of the competitors
bypass this issue. It is obviously a software intensive implementation and when yo
suit bad things may happen. If I've interpreted any of this incorrectly please let me
working on these products a little over a year ago and am self taught no one existe
quit and was not engaged) and the SMSC/Microchip guys have been outstanding i
technologies and make the right product decisions. We will continue down this ro
will be further discussion.

Best Regards
Mark Orlosky

From: Brigham.Steele@microchip.com [mailto:Brigham.Steele@microchip.com]
Sent: Wednesday, June 18, 2014 2:33 PM
To: Orlosky, Mark
Cc: Chris.Behal@microchip.com
Subject: RE: CarPlay and forced DCP to external ports

Mark,

Just to be clear, we need to make sure that the message is consistent to Dave fror
likes to look at the big picture, so I love his ideas, but some items may be physicall
capabilities of ANY USB system, and I think he needs to understand the capabilitie
the low level details. This is how I would break it down, let me know if you disagre
if you have other questions.

1. With USB, you are only allowed 1 Host and multiple devices on a bus. This m
   need to make sure Dave understands this fact.
2. CarPlay passes the Host role from the HU to the Phone itself.
3. Once the HU has given up the Host role, it will not see any of the other ports.
   want to see the other ports, it will ignore them.
   a. In our initial development we would plug in USB speakers and thumb drives into the other Hub ports. The iPhone would display a message that the speakers and thumb drive were not authenticated devices, so it would not support them.
   b. To avoid these annoying messages displayed on the phone, the HU can disable those ports when entering Carplay.

EX. 58
C.A. No.17-1194-JDW

EX. 58 - Page 1 of 2

RESTRICTED - ATTORNEY EYES ONLY

Microchip_267121

Aptiv Exhibit 2005 Page 1
Microchip v. Aptiv IPR2024-00228

EX2005 at p.1-2

From: Brigham.Steele@microchip.com [mailto:Brigham.Steele@microchip.com]
Sent: Wednesday, June 18, 2014 2:33 PM
To: Orlosky, Mark
Cc: Chris.Behal@microchip.com
Subject: RE: CarPlay and forced DCP to external ports

Just to be clear, we need to make sure that the message is consistent to Dave from his vendors. Dave likes to look at the big picture, so I love his ideas, but some items may be physically outside the capabilities of ANY USB system, and I think he needs to understand the capabilities of USB and some of the low level details. This is how I would break it down, let me know if you disagree with my analysis or if you have other questions.

-228 POR (Paper 25), 63, 68.

DEMONSTRATIVE EXHIBIT — NOT EVIDENCE

June 18, 2014

From: Orlosky, Mark
Sent: Wednesday, June 18, 2014 12:55 PM MDT
To: Brigham Steele - C21902
Subject: RE: CarPlay and forced DCP to external ports

Brigham

I understand what you say about the big picture. USB will support multiple streams from the data lanes but with one and only one Host. In the discussed scenario a nonmusic app is runni
allows another media stream to also play except the Apple device is one to one w
with all other lanes ignored. I think the disconnect is the difference between mult
CarPlay non CarPlay reversal will still be only as capable as the new Host. If it had
the other ports fine and the processing power to handle the audio codec required
be serviced by the Host in the manner Dave wants to see. One of the competitors
bypass this issue. It is obviously a software intensive implementation and when yo
suit bad things may happen. If I've interpreted any of this incorrectly please let me
working on these products a little over a year ago and am self taught no one existe
quit and was not engaged) and the SMSC/Microchip guys have been outstanding i
technologies and make the right product decisions. We will continue down this ro
will be further discussion.

Best Regards
Mark Orlosky

From: Brigham.Steele@microchip.com [mailto:Brigham.Steele@microchip.com]
Sent: Wednesday, June 18, 2014 2:33 PM
To: Orlosky, Mark
Cc: Chris.Behal@microchip.com
Subject: RE: CarPlay and forced DCP to external ports

Mark,

Just to be clear, we need to make sure that the message is consistent to Dave fror
likes to look at the big picture, so I love his ideas, but some items may be physicall
capabilities of ANY USB system, and I think he needs to understand the capabilitie
the low level details. This is how I would break it down, let me know if you disagre
if you have other questions.

1. With USB, you are only allowed 1 Host and multiple devices on a bus. This m
   need to make sure Dave understands this fact.
2. CarPlay passes the Host role from the HU to the Phone itself.
3. Once the HU has given up the Host role, it will not see any of the other ports. If the iPhone doesn't want to see the other ports, it will ignore them.
   a. In our initial development we would plug in USB speakers and thumb drives into the other Hub ports. The iPhone would display a message that the speakers and thumb drive were not authenticated devices, so it would not support them.
   b. To avoid these annoying messages displayed on the phone, the HU can disable those ports when entering Carplay.

EX. 58
C.A. No.17-1194-JDW

EX. 58 - Page 1 of 2

RESTRICTED - ATTORNEY EYES ONLY

Microchip_267121

Aptiv Exhibit 2005 Page 1
Microchip v. Aptiv IPR2024-00228

EX2005 at p.1-2

From: Brigham.Steele@microchip.com [mailto:Brigham.Steele@microchip.com]
Sent: Wednesday, June 18, 2014 2:33 PM
To: Orlosky, Mark
Cc: Chris.Behal@microchip.com
Subject: RE: CarPlay and forced DCP to external ports

4. If Dave wants to have data capability, he will have to require 2 USB lanes to the Head Unit. We can still do the switching matrix, but it will be to two different Hubs. That way the HU can have data capabilities on all the non CarPlay ports. This is a trade off, more cables with data, or one cable with dedicated charging ports. He needs to make the decision based on those options.

-228 POR (Paper 25), 63, 68.

DEMONSTRATIVE EXHIBIT — NOT EVIDENCE

June 18, 2014

From: Orlosky, Mark
Sent: Wednesday, June 18, 2014 12:55 PM MDT
To: Brigham Steele - C21902
Subject: RE: CarPlay and forced DCP to external ports

Brigham

I understand what you say about the big picture. USB will support multiple streams from the data lanes but with one and only one Host. In the discussed scenario a nonmusic app is runni
allows another media stream to also play except the Apple device is one to one w
with all other lanes ignored. I think the disconnect is the difference between mult
CarPlay non CarPlay reversal will still be only as capable as the new Host. If it had
the other ports fine and the processing power to handle the audio codec required
be serviced by the Host in the manner Dave wants to see. One of the competitors
bypass this issue. It is obviously a software intensive implementation and when yo
suit bad things may happen. If I've interpreted any of this incorrectly please let me
working on these products a little over a year ago and am self taught no one existe
quit and was not engaged) and the SMSC/Microchip guys have been outstanding i
technologies and make the right product decisions. We will continue down this ro
will be further discussion.

Best Regards
Mark Orlosky

From: Brigham.Steele@microchip.com [mailto:Brigham.Steele@microchip.com]
Sent: Wednesday, June 18, 2014 2:33 PM
To: Orlosky, Mark
Cc: Chris.Behal@microchip.com
Subject: RE: CarPlay and forced DCP to external ports

Mark,

Just to be clear, we need to make sure that the message is consistent to Dave fro
likes to look at the big picture, so I love his ideas, but some items may be physicall
capabilities of ANY USB system, and I think he needs to understand the capabilitie
the low level details. This is how I would break it down, let me know if you disagr
if you have other questions.

1. With USB, you are only allowed 1 Host and multiple devices on a bus. This m
   need to make sure Dave understands this fact.
2. CarPlay passes the Host role from the HU to the Phone itself.
3. Once the HU has given up the Host role, it will not see any of the other ports. If the iPhone doesn't want to see the other ports, it will ignore them.
   a. In our initial development we would plug in USB speakers and thumb drives into the other Hub ports. The iPhone would display a message that the speakers and thumb drive were not authenticated devices, so it would not support them.
   b. To avoid these annoying messages displayed on the phone, the HU can disable those ports when entering Carplay.

EX. 58
C.A. No.17-1194-JDW

EX. 58 - Page 1 of 2

RESTRICTED - ATTORNEY EYES ONLY

Microchip_267121

Aptiv Exhibit 2005 Page 1
Microchip v. Aptiv IPR2024-00228

EX2005 at p.1-2

From: Brigham.Steele@microchip.com [mailto:Brigham.Steele@microchip.com]
Sent: Wednesday, June 18, 2014 2:33 PM
To: Orlosky, Mark
Cc: Chris.Behal@microchip.com
Subject: RE: CarPlay and forced DCP to external ports

We need to emphasize that you cannot do Carplay AND own the other ports with one USB data lane. Anybody who states this is doing things with the USB Bus that grossly violates the USB protocol and could introduce many errors that would likely impact Carplay execution, and the normal data exchange on the other ports. No bus can serve two masters.

-228 POR (Paper 25), 63, 68.

DEMONSTRATIVE EXHIBIT — NOT EVIDENCE

Brigham Steele

LinkedIn

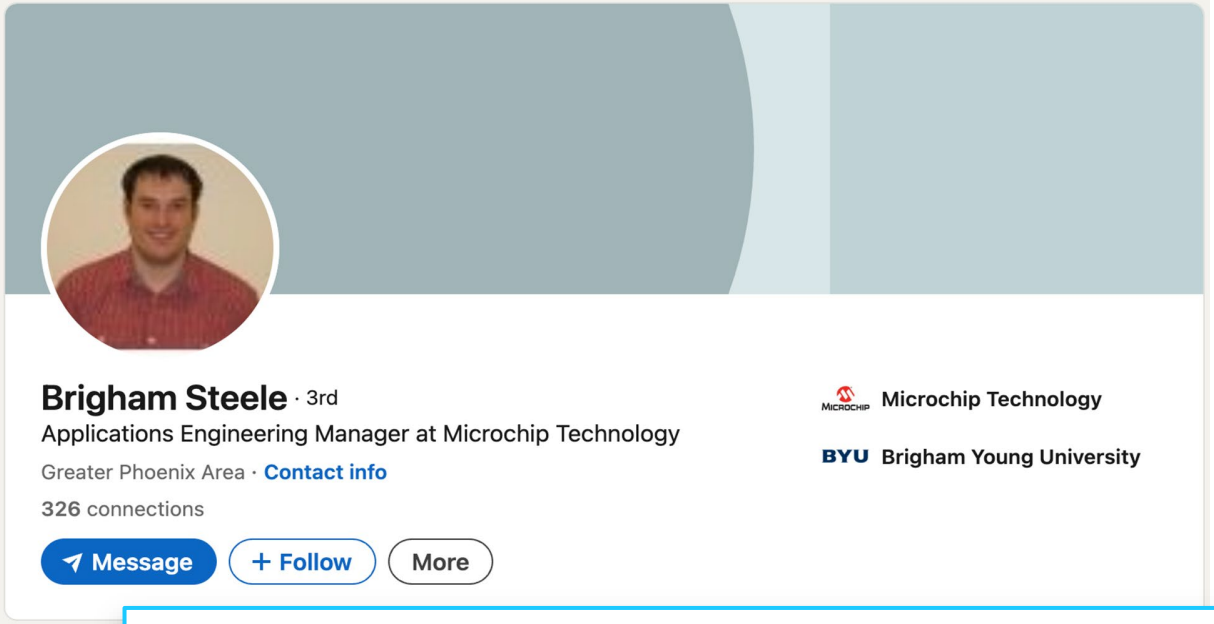

Applications Engineer
Aug 2008 - Jan 2012 · 3 yrs 6 mos

Create lab testing stations to help designers debug prototypes and validate customer samples. Work includes:
1. Designing boards to test USB and Ethernet PHYs
2. Program automated and manual test applications
3. Test power regulators, high speed switches, audio switches, battery chargers, USB Hubs, card readers etc...

BYU

- 2002
  B.S. Electrical Engineering

SMSC

- Aug 2008-Jan 2012
  Applications Engineer
- Feb 2012-Jan 2013
  Principal Validation Engineer

MICROCHIP

- Jan 2013-Nov 2014
  Principal Validation Engineer
- Nov 2014-present
  Applications Engineer Manager

-228 POR (Paper 25), 68.

DEMONSTRATIVE EXHIBIT — NOT EVIDENCE

August 11, 2014

From: David Sroka - C16440
Sent: Monday, August 11, 2014 8:49 AM MDT
To: Don Perkins - C21824; Sal Canu - C15821
CC: Brigham Steele - C21902; Keith Barber - C11768; Stefan Saenger - M21164; Wayne Liang - C21747; Chris Behal - C12678; Ray Kamps - C12940
Subject: RE: CarPlay compliance strategy

Couple additional points:
1) Carplay REQUIRES the head unit to become a USB device. This so that th
and controls the USB bus. In your diagram, the head unit stays the host.
there.
2) CarPlay requires a dedicated path....this solution allows other USB devic
NOT Compliant.

3) Other issues: 1) Authentication process being violated?, 2) This is compl
Two USB Hosts implementing a single transaction by splitting it into two
of one. This goes against the primary requirement of USB; one bus / one
supplier guarantee the infinite number of applications scenarios that wil
and the Head Unit Host. These hosts will be acting independently of eac
maintain USB specifcations/ timing/time-outs/HID / adequate throughp
Could be demo'd but no way it can be guaranteed.

Dave

From: Don Perkins - C21824
Sent: Monday, August 11, 2014 7:22 AM
To: Sal Canu - C15821; David Sroka - C16440
Cc: Brigham Steele - C21902; Keith Barber - C11768; Stefan Saenger - M211
Chris Behal - C12678; Ray Kamps - C12940
Subject: RE: CarPlay compliance strategy

HI Sal,

We will provide a slide deck which will illustrate the "considerable" complex
MFI compliance) to the "end point spoofing" that is being proposed by Unw
second lane is dwarfed by the cost of the ARM cpu and associated silicon.

Yes, we are going to ask Apple is such a configuration is going to be tolerate
the Carplay spec and try and get you a quote from there.

We will be addressing this in detail but I suspect that GM already knows they are in trouble and the Carplay application may not go well in their car.

Thanks,

Don P.

EX. 252
C.A. No.17-1194-JDW

RESTRICTED - ATTORNEY EYES ONLY

EX. 252 - Page 1 of 3

Microchip_269217

Aptiv Exhibit 2009 Page 1
Microchip v. Aptiv IPR2024-00228

EX2009

From: Don Perkins - C21824
Sent: Monday, August 11, 2014 7:22 AM
To: Sal Canu - C15821; David Sroka - C16440
Cc: Brigham Steele - C21902; Keith Barber - C11768; Stefan Saenger - M21164; Wayne Liang - C21747; Chris Behal - C12678; Ray Kamps - C12940
Subject: RE: CarPlay compliance strategy

We will provide a slide deck which will illustrate the "considerable" complexity (and lack of USB2 and MFI compliance) to the "end point spoofing" that is being proposed by Unwired. The $2 cost of having a second lane is dwarfed by the cost of the ARM cpu and associated silicon.

NOTE: Unwired became Aptiv. *See* Patent Owner Response (-228) at 66 fn. 3

-228 POR (Paper 25), 70.

DEMONSTRATIVE EXHIBIT — NOT EVIDENCE

August 11, 2014

From: David Sroka - C16440
Sent: Monday, August 11, 2014 8:49 AM MDT
To: Don Perkins - C21824; Sal Canu - C15821
CC: Brigham Steele - C21902; Keith Barber - C11768; Stefan Saenger - M21164; Wayne Liang - C21747; Chris Behal - C12678; Ray Kamps - C12940
Subject: RE: CarPlay compliance strategy

3) Other issues: 1) Authentication process being violated?, 2) This is completely NON-STANDARD USB. Two USB Hosts implementing a single transaction by splitting it into two serial transactions, instead of one. This goes against the primary requirement of USB; one bus / one Host. How can the supplier guarantee the infinite number of applications scenarios that will occur in the Apple host and the Head Unit Host. These hosts will be acting independently of each other but will need to maintain USB specifcations/ timing/time-outs/HID / adequate throughputs as if it was a single bus. Could be demo'd but no way it can be guaranteed.

From: David Sroka - C16440
Sent: Monday, August 11, 2014 8:49 AM MDT
To: Don Perkins - C21824; Sal Canu - C15821
CC: Brigham Steele - C21902; Keith Barber - C11768; Stefan Saenger - M211
C12678; Ray Kamps - C12940
Subject: RE: CarPlay compliance strategy

Couple additional points:
1) Carplay REQUIRES the head unit to become a USB device. This so that
and controls the USB bus. In your diagram, the head unit stays the ho
there.
2) CarPlay requires a dedicated path....this solution allows other USB de
NOT Compliant.

3) Other issues: 1) Authentication process being violated?, 2) This is con
Two USB Hosts implementing a single transaction by splitting it into t
of one. This goes against the primary requirement of USB; one bus / c
supplier guarantee the infinite number of applications scenarios that
and the Head Unit Host. These hosts will be acting independently of each other but will need to
maintain USB specifcations/ timing/time-outs/HID / adequate throughputs as if it was a single bus.
Could be demo'd but no way it can be guaranteed.

Dave

From: Don Perkins - C21824
Sent: Monday, August 11, 2014 7:22 AM
To: Sal Canu - C15821; David Sroka - C16440
Cc: Brigham Steele - C21902; Keith Barber - C11768; Stefan Saenger - M2
Chris Behal - C12678; Ray Kamps - C12940
Subject: RE: CarPlay compliance strategy

HI Sal,

We will provide a slide deck which will illustrate the "considerable" compl
MFI compliance) to the "end point spoofing" that is being proposed by Ur
second lane is dwarfed by the cost of the ARM cpu and associated silicon.

Yes, we are going to ask Apple is such a configuration is going to be tolera
the Carplay spec and try and get you a quote from there.

We will be addressing this in detail but I suspect that GM already knows t
Carplay application may not go well in their car.

Thanks,

Don P.

EX. 252 C.A. No.17-1194-JDW

RESTRICTED - ATTORNEY EYES ONLY

EX. 252 - Page 1 of 3

Microchip_269217

Aptiv Exhibit 2009 Page 1
Microchip v. Aptiv IPR2024-00228

EX2009

-228 POR (Paper 25), 70.

DEMONSTRATIVE EXHIBIT — NOT EVIDENCE

PODX99

December 1, 2014

From: David Sroka - C16440
Sent: Monday, December 1, 2014 12:46 PM MST
To: Eric Kawamoto - C21718
CC: Mitchel Obolsky - C08039
Subject: FW: Media Hub Interim Update

Already hearing from sales on the Unwired momentum.

Dave

From: Kurt Ebert - C12116
Sent: Monday, December 01, 2014 12:16 PM
To: David Sroka - C16440
Cc: Heath Christopher; Marc Edwards - C15964; Dan Marquez - C13115; Lance To
Carpenter - C09265; Keith Barber - C11768; Sal Canu - C15821; Kevin Lipovsky - C
C09350
Subject: RE: Media Hub Interim Update

Dave,

Go ahead and schedule a call per your availability. I am sure folks will make them

Kurt

Kurt Ebert
Regional Sales Manager - Southeast
Microchip Technology
Office: 678-957-9614
Cell: 678-485-6233
kurt.Ebert@microchip.com
Web Site: http://www.microchip.com
Technical Support: http://support.microchip.com

From: David Sroka - C16440
Sent: Monday, December 01, 2014 11:40 AM
To: Kurt Ebert - C12116
Cc: Eric Kawamoto - C21718; Mitchel Obolsky - C08039
Subject: RE: Media Hub Interim Update

When persistent USB is a requirement we definitely have run into a wall. I have a 3PM call but am otherwise open. We are taking a number steps that we can update the team as well. Note, I did speak to Marc at some length last Wednesday, on this and other items.

Regards,

EX.
66
C.A. No.17-1194-JDW

EX. 66 - Page 1 of 3

RESTRICTED - ATTORNEY EYES ONLY

Microchip_273811

Aptiv Exhibit 2007 Page 1
Microchip v. Aptiv IPR2024-00228

EX2007

From: David Sroka - C16440
Sent: Monday, December 01, 2014 11:40 AM
To: Kurt Ebert - C12116
Cc: Eric Kawamoto - C21718; Mitchel Obolsky - C08039
Subject: RE: Media Hub Interim Update

When persistent USB is a requirement we definitely have run into a wall. I have a 3PM call but am otherwise open. We are taking a number steps that we can update the team as well. Note, I did speak to Marc at some length last Wednesday, on this and other items.

Regards,

-228 POR (Paper 25), 71.

DEMONSTRATIVE EXHIBIT — NOT EVIDENCE

PODX100

December 2, 2014

From: Sal Canu - C15821
Sent: Tuesday, December 2, 2014 9:31 PM MST
To: Stefan Saenger - M21164; Keith Barber - C11768; David Sroka - C16440; Dave Carpenter - C09265; Kevin Lipovsky - C07568; Kurt Ebert - C12116; Chris Behal - C12678; Brigham Steele - C21902; Marc Edwards - C15964; Greg Destexhe - X15625; Ray Kamps - C12940
Subject: Microchip position for the Thursday Chrysler Meeting

Our position:

Upper Management involvement:

- Upper Management is aware of the market, the requirements, and all solutions proposed. More information is needed for them to make any directional changes and this will take time. A business case providing revenue commitments/estimates would have to justify investment.

Short-term:

- We looked at developing a solution for 1 upstream lane, persistent USB data and we don't have a solution. We wish we could provide a solution but we don't have it.

RESTRICTED - ATTORNEY EYES ONLY

Aptiv Exhibit 2010 Page 1
Microchip v. Aptiv IPR2024-00228

EX2010

-228 POR (Paper 25), 71.

DEMONSTRATIVE EXHIBIT — NOT EVIDENCE

PODX101

January 9, 2015

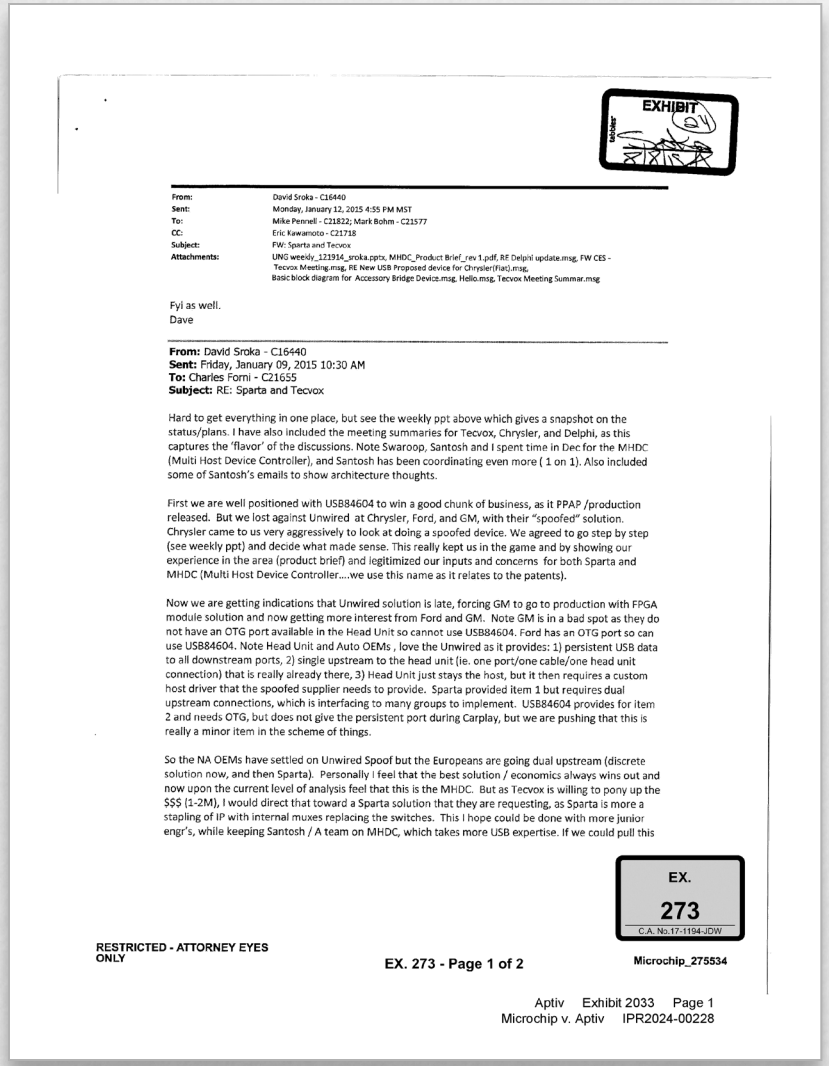

EXHIBIT

From: David Sroka - C16440
Sent: Monday, January 12, 2015 4:55 PM MST
To: Mike Pennell - C21822; Mark Bohm - C21577
CC: Eric Kawamoto - C21718
Subject: FW: Sparta and Tecvox
Attachments: UNG weekly_121914_sroka.pptx, MHDC_Product Brief_rev 1.pdf, RE Delphi update.msg, FW CES - Tecvox Meeting.msg, RE New USB Proposed device for Chrysler(Fiat).msg, Basic block diagram for Accessory Bridge Device.msg, Hello.msg, Tecvox Meeting Summar.msg

Fyi as well.
Dave

From: David Sroka - C16440
Sent: Friday, January 09, 2015 10:30 AM
To: Charles Forni - C21655
Subject: RE: Sparta and Tecvox

Hard to get everything in one place, but see the weekly ppt above which gives a snapshot on the status/plans. I have also included the meeting summaries for Tecvox, Chrysler, and Delphi, as this captures the 'flavor' of the discussions. Note Swaroop, Santosh and I spent time in Dec for the MHDC (Multi Host Device Controller), and Santosh has been coordinating even more (1 on 1). Also included some of Santosh's emails to show architecture thoughts.

First we are well positioned with USB84604 to win a good chunk of business, as it PPAP /production released. But we lost against Unwired at Chrysler, Ford, and GM, with their "spoofed" solution. Chrysler came to us very aggressively to look at doing a spoofed device. We agreed to go step by step (see weekly ppt) and decide what made sense. This really kept us in the game and by showing our experience in the area (product brief) and legitimized our inputs and concerns for both Sparta and MHDC (Multi Host Device Controller....we use this name as it relates to the patents).

Now we are getting indications that Unwired solution is late, forcing GM to go to production with FPGA module solution and now getting more interest from Ford and GM. Note GM is in a bad spot as they do not have an OTG port available in the Head Unit so cannot use USB84604. Ford has an OTG port so can use USB84604. Note Head Unit and Auto OEMs , love the Unwired as it provides: 1) persistent USB data to all downstream ports, 2) single upstream to the head unit (ie. one port/one cable/one head unit connection) that is really already there, 3) Head Unit just stays the host, but it then requires a custom host driver that the spoofed supplier needs to provide. Sparta provided item 1 but requires dual upstream connections, which is interfacing to many groups to implement. USB84604 provides for item 2 and needs OTG, but does not give the persistent port during Carplay, but we are pushing that this is really a minor item in the scheme of things.

So the NA OEMs have settled on Unwired Spoof but the Europeans are going dual upstream (discrete solution now, and then Sparta). Personally I feel that the best solution / economics always wins out and now upon the current level of analysis feel that this is the MHDC. But as Tecvox is willing to pony up the $$$ (1-2M), I would direct that toward a Sparta solution that they are requesting, as Sparta is more a stapling of IP with internal muxes replacing the switches. This I hope could be done with more junior engr's, while keeping Santosh / A team on MHDC, which takes more USB expertise. If we could pull this

EX. 273 C.A. No.17-1194-JDW

RESTRICTED - ATTORNEY EYES ONLY

EX. 273 - Page 1 of 2

Microchip_275534

Aptiv Exhibit 2033 Page 1
Microchip v. Aptiv IPR2024-00228

EX2033

From: David Sroka - C16440
Sent: Friday, January 09, 2015 10:30 AM
To: Charles Forni - C21655
Subject: RE: Sparta and Tecvox

Hard to get everything in one place, but see the weekly ppt above which gives a snapshot on the status/plans. I have also included the meeting summaries for Tecvox, Chrysler, and Delphi, as this captures the 'flavor' of the discussions. Note Swaroop, Santosh and I spent time in Dec for the MHDC (Multi Host Device Controller), and Santosh has been coordinating even more (1 on 1). Also included some of Santosh's emails to show architecture thoughts.

First we are well positioned with USB84604 to win a good chunk of business, as it PPAP /production released. But we lost against Unwired at Chrysler, Ford, and GM, with their "spoofed" solution. Chrysler came to us very aggressively to look at doing a spoofed device. We agreed to go step by step (see weekly ppt) and decide what made sense. This really kept us in the game and by showing our experience in the area (product brief) and legitimized our inputs and concerns for both Sparta and MHDC (Multi Host Device Controller....we use this name as it relates to the patents).

Now we are getting indications that Unwired solution is late, forcing GM to go to production with FPGA module solution and now getting more interest from Ford and GM. Note GM is in a bad spot as they do not have an OTG port available in the Head Unit so cannot use USB84604. Ford has an OTG port so can use USB84604. Note Head Unit and Auto OEMs , love the Unwired as it provides: 1) persistent USB data to all downstream ports, 2) single upstream to the head unit (ie. one port/one cable/one head unit connection) that is really already there, 3) Head Unit just stays the host, but it then requires a custom host driver that the spoofed supplier needs to provide. Sparta provided item 1 but requires dual upstream connections, which is interfacing to many groups to implement. USB84604 provides for item 2 and needs OTG, but does not give the persistent port during Carplay, but we are pushing that this is really a minor item in the scheme of things.

-228 POR (Paper 25), 72-74.

DEMONSTRATIVE EXHIBIT — NOT EVIDENCE

PODX102

Industry Praise: PACE Award

PACE Award Criteria:

- Innovation must have been developed primarily by an automotive supplier
- Innovation must have been new to the automotive industry
- Innovation must be in use in a production vehicle
- Innovation must "change the rules of the game"

EX2036 at ¶ 4.

-228 POR (Paper 25), 74-75.

DEMONSTRATIVE EXHIBIT — NOT EVIDENCE

’643 Patent, Fig. 4

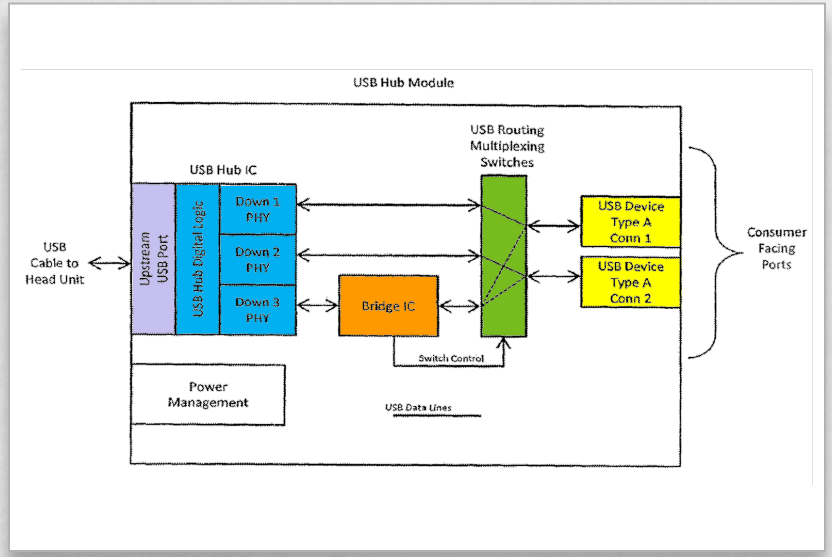

’643 Patent, Claim 1

1. A method, comprising:

providing a first USB port for communication with a USB host;

providing a second USB port for communicating with a consumer USB device;

providing a signal detection circuit for receiving USB signals from the consumer USB device via the second USB port;

routing the USB signals emanating from the consumer USB device to the first USB port via a routing logic circuit connected directly to a USB bridge and a USB hub connected to the USB bridge in accordance with a determination by the signal detection circuit that the consumer device is operating in a USB host mode, wherein the USB bridge includes a bridge controller, buffers, and a plurality of ports; and

routing the USB signals emanating from the consumer USB device to the first USB port via the routing logic connected directly to the USB hub and thereby bypassing the USB bridge in accordance with a determination by the signal detection circuit that the consumer device is operating in a USB device mode, wherein the USB hub and USB bridge have different components and functionality.

-011 Pet. (Paper 1), 51-69.

DEMONSTRATIVE EXHIBIT — NOT EVIDENCE

Certificate of Service (37 C.F.R. § 42.6(e)(4))

I hereby certify that the attached PATENT OWNER'S DEMONSTRATIVES was served on the below date via e-mail (by consent) to the following counsel of record for the Petitioner:

Travis Jensen (Registration No. 60,087)
tjensen@orrick.com
T61PTABDocket@orrick.com
Jeremy Jason Lang (Registration No. 73,604)
jlang@orrick.com
PTABDocketJJL2@orrick.com
Orrick, Herrington & Sutcliffe LLP
1000 Marsh Road
Menlo Park, CA 94025-1015

Dated: April 11, 2025

/Andrew T. Jones/
Andrew T. Jones