PTO/SB/08a (01-10)
Approved for use through 07/31/2012. OMB 0651-0031
U.S. Patent and Trademark Office; U.S. DEPARTMENT OF COMMERCE
Under the Paperwork Reduction Act of 1995, no persons are required to respond to a collection of information unless it contains a valid OMB control number.

INFORMATION DISCLOSURE STATEMENT BY APPLICANT (Not for submission under 37 CFR 1.99)		
	Application Number	
	Filing Date	
	First Named Inventor	Voto
	Art Unit	
	Examiner Name	
	Attorney Docket Number	7021.145US5

U.S.PATENTS Remove

Examiner Initial*	Cite No	Patent Number	Kind Code[1]	Issue Date	Name of Patentee or Applicant of cited Document	Pages,Columns,Lines where Relevant Passages or Relevant Figures Appear
	1	6073188	A	2000-06-06	FLEMING	
	2	6732219	B1	2004-05-04	BROYLES	
	3	6934793	B2	2005-08-23	YING, et al.	
	4	6957287	B2	2005-10-18	LOU, et al.	
	5	7130656	B2	2006-10-31	OKAGAKI, et al.	
	6	7280802	B2	2007-10-09	GRADY	
	7	7478191	B2	2009-01-13	WURZBURG, et al.	
	8	7502878	B1	2009-03-10	WRIGHT	

INFORMATION DISCLOSURE STATEMENT BY APPLICANT (Not for submission under 37 CFR 1.99)	Application Number	
	Filing Date	
	First Named Inventor	Voto
	Art Unit	
	Examiner Name	
	Attorney Docket Number	7021.145US5

	9	7523243	B2	2009-04-21	BOHM, et al.	
	10	7627708	B2	2009-12-01	BOHM, et al.	
	11	8447598	B2	2013-05-21	CHUTORASH, et al.	
	12	8447890	B1	2013-05-21	LETOURNEUR, et al.	

If you wish to add additional U.S. Patent citation information please click the Add button. Add

U.S.PATENT APPLICATION PUBLICATIONS Remove

Examiner Initial*	Cite No	Publication Number	Kind Code[1]	Publication Date	Name of Patentee or Applicant of cited Document	Pages,Columns,Lines where Relevant Passages or Relevant Figures Appear
	1	20030167345	A1	2003-09-04	KNIGHT, et al.	
	2	20040019732	A1	2004-01-29	OVERTOOM, et al.	
	3	20040088449	A1	2004-05-06	SAKAKI	
	4	20040243755	A1	2004-12-02	LEE, et al.	
	5	20060056401	A1	2006-03-16	BOHM, et al.	

INFORMATION DISCLOSURE STATEMENT BY APPLICANT (Not for submission under 37 CFR 1.99)	Application Number	
	Filing Date	
	First Named Inventor	Voto
	Art Unit	
	Examiner Name	
	Attorney Docket Number	7021.145US5

	6	20060206650	A1	2006-09-14	CHANG	
	7	20070067553	A1	2007-03-22	CHANG	
	8	20070086724	A1	2007-04-19	GRADY, et al.	
	9	20070156293	A1	2007-07-05	KELLZI, et al.	
	10	20070255885	A1	2007-11-01	BOHM, et al.	
	11	20080005262	A1	2008-01-03	WURZBURG, et al.	
	12	20090117890	A1	2009-05-07	JACOBSEN, et al.	
	13	20110054721	A1	2011-03-03	GOODRICH, et al.	
	14	20110124300	A1	2011-05-26	SINAI	
	15	20120134506	A1	2012-05-31	DEBIASIO, et al.	
	16	20120191811	A1	2012-07-26	NG, et al.	

INFORMATION DISCLOSURE STATEMENT BY APPLICANT (Not for submission under 37 CFR 1.99)	Application Number	
	Filing Date	
	First Named Inventor	Voto
	Art Unit	
	Examiner Name	
	Attorney Docket Number	7021.145US5

	17	20120290859	A1	2012-11-15	SALADIN, et al.	
	18	20130053003	A1	2013-02-28	KING	
	19	20130106750	A1	2013-05-02	KUROSAWA	
	20	20150089092	A1	2015-03-26	VOTO, et al.	

If you wish to add additional U.S. Published Application citation information please click the Add button. Add

FOREIGN PATENT DOCUMENTS Remove

Examiner Initial*	Cite No	Foreign Document Number[3]	Country Code[2] i	Kind Code[4]	Publication Date	Name of Patentee or Applicant of cited Document	Pages,Columns,Lines where Relevant Passages or Relevant Figures Appear	T[5]
	1	470887	TW	B	2002-01-01	Jang		
	2	2003256351	JP	A	2003-09-12	Furukawa		
	3	2007147114	WO	A2	2007-12-21	Wurzburg, et al.		
	4	2473123	GB	A	2011-03-02	Lydon, et al.		
	5	2015081448	WO	A1	2015-06-11	Condotta, et al.		

If you wish to add additional Foreign Patent Document citation information please click the Add button Add

INFORMATION DISCLOSURE STATEMENT BY APPLICANT (Not for submission under 37 CFR 1.99)	Application Number	
	Filing Date	
	First Named Inventor	Voto
	Art Unit	
	Examiner Name	
	Attorney Docket Number	7021.145US5

NON-PATENT LITERATURE DOCUMENTS			Remove
Examiner Initials*	Cite No	Include name of the author (in CAPITAL LETTERS), title of the article (when appropriate), title of the item (book, magazine, journal, serial, symposium, catalog, etc), date, pages(s), volume-issue number(s), publisher, city and/or country where published.	T5
	1	,"APC USB 2.0 Host Controller- Device Driver Download", http:/lwww.liutilities.com/devicedriver/ ~pcusb20hostconlroller/, July 2002	
	2	'UNIVERSAL SERIAL BUS SPECIFICATION REVISION 2.0", UNIVERSAL SERIAL BUS SPECIFICATION" no. REV. J .0, 27 April 2000, 04/27/2000	
	3	'USB 2.0 Autoswitch User's Manual", Lindy Electronics Limited & Lindy-Elektronic GMBH, September 2002	
	4	OLSEN, et al., "FFI Rapport-A STUDY OF COMPUTER INTERFACES FOR SOLDIER SYSTEMS", Norwegian Defence Research Establishment, October 10, 2005, 10/10/2005	
	5	TYRE, "Peripheral-Sharing Hardware Suits Education's Needs to a 'T"", THE Journal {Technological Horizons In Education), October 1988	
	6	Examination Report for IN Application No. 201647014322, dated December 17, 2020, 5 pages	
	7	European Search Report for Application No. 18195496, European Patent Office, 2019-03-19	
	8	USB Implementers Forum ET AL: "USB Power 3 Delivery Specification REvision 3.0, Version 1.0a", 25 March 2016	

If you wish to add additional non-patent literature document citation information please click the Add button Add

EXAMINER SIGNATURE			
Examiner Signature		Date Considered	

*EXAMINER: Initial if reference considered, whether or not citation is in conformance with MPEP 609. Draw line through a citation if not in conformance and not considered. Include copy of this form with next communication to applicant.

EFS Web 2.1.17

INFORMATION DISCLOSURE STATEMENT BY APPLICANT (Not for submission under 37 CFR 1.99)	Application Number	
	Filing Date	
	First Named Inventor	Voto
	Art Unit	
	Examiner Name	
	Attorney Docket Number	7021.145US5

[1] See Kind Codes of USPTO Patent Documents at www.USPTO.GOV or MPEP 901.04. [2] Enter office that issued the document, by the two-letter code (WIPO Standard ST.3). [3] For Japanese patent documents, the indication of the year of the reign of the Emperor must precede the serial number of the patent document. [4] Kind of document by the appropriate symbols as indicated on the document under WIPO Standard ST.16 if possible. [5] Applicant is to place a check mark here if English language translation is attached.

INFORMATION DISCLOSURE STATEMENT BY APPLICANT (Not for submission under 37 CFR 1.99)	Application Number	
	Filing Date	
	First Named Inventor	Voto
	Art Unit	
	Examiner Name	
	Attorney Docket Number	7021.145US5

CERTIFICATION STATEMENT

Please see 37 CFR 1.97 and 1.98 to make the appropriate selection(s):

That each item of information contained in the information disclosure statement was first cited in any communication from a foreign patent office in a counterpart foreign application not more than three months prior to the filing of the information disclosure statement. See 37 CFR 1.97(e)(1).

OR

☐ That no item of information contained in the information disclosure statement was cited in a communication from a foreign patent office in a counterpart foreign application, and, to the knowledge of the person signing the certification after making reasonable inquiry, no item of information contained in the information disclosure statement was known to any individual designated in 37 CFR 1.56(c) more than three months prior to the filing of the information disclosure statement. See 37 CFR 1.97(e)(2).

See attached certification statement.

The fee set forth in 37 CFR 1.17 (p) has been submitted herewith.

☒ A certification statement is not submitted herewith.

SIGNATURE

A signature of the applicant or representative is required in accordance with CFR 1.33, 10.18. Please see CFR 1.4(d) for the form of the signature.

Signature	/Robert Myers/	Date (YYYY-MM-DD)	2021-10-11
Name/Print	Robert Myers	Registration Number	69783

This collection of information is required by 37 CFR 1.97 and 1.98. The information is required to obtain or retain a benefit by the public which is to file (and by the USPTO to process) an application. Confidentiality is governed by 35 U.S.C. 122 and 37 CFR 1.14. This collection is estimated to take 1 hour to complete, including gathering, preparing and submitting the completed application form to the USPTO. Time will vary depending upon the individual case. Any comments on the amount of time you require to complete this form and/or suggestions for reducing this burden, should be sent to the Chief Information Officer, U.S. Patent and Trademark Office, U.S. Department of Commerce, P.O. Box 1450, Alexandria, VA 22313-1450. DO NOT SEND FEES OR COMPLETED FORMS TO THIS ADDRESS. **SEND TO: Commissioner for Patents, P.O. Box 1450, Alexandria, VA 22313-1450.**

Privacy Act Statement

The Privacy Act of 1974 (P.L. 93-579) requires that you be given certain information in connection with your submission of the attached form related to a patent application or patent. Accordingly, pursuant to the requirements of the Act, please be advised that: (1) the general authority for the collection of this information is 35 U.S.C. 2(b)(2); (2) furnishing of the information solicited is voluntary; and (3) the principal purpose for which the information is used by the U.S. Patent and Trademark Office is to process and/or examine your submission related to a patent application or patent. If you do not furnish the requested information, the U.S. Patent and Trademark Office may not be able to process and/or examine your submission, which may result in termination of proceedings or abandonment of the application or expiration of the patent.

The information provided by you in this form will be subject to the following routine uses:

1. The information on this form will be treated confidentially to the extent allowed under the Freedom of Information Act (5 U.S.C. 552) and the Privacy Act (5 U.S.C. 552a). Records from this system of records may be disclosed to the Department of Justice to determine whether the Freedom of Information Act requires disclosure of these record s.

2. A record from this system of records may be disclosed, as a routine use, in the course of presenting evidence to a court, magistrate, or administrative tribunal, including disclosures to opposing counsel in the course of settlement negotiations.

3. A record in this system of records may be disclosed, as a routine use, to a Member of Congress submitting a request involving an individual, to whom the record pertains, when the individual has requested assistance from the Member with respect to the subject matter of the record.

4. A record in this system of records may be disclosed, as a routine use, to a contractor of the Agency having need for the information in order to perform a contract. Recipients of information shall be required to comply with the requirements of the Privacy Act of 1974, as amended, pursuant to 5 U.S.C. 552a(m).

5. A record related to an International Application filed under the Patent Cooperation Treaty in this system of records may be disclosed, as a routine use, to the International Bureau of the World Intellectual Property Organization, pursuant to the Patent Cooperation Treaty.

6. A record in this system of records may be disclosed, as a routine use, to another federal agency for purposes of National Security review (35 U.S.C. 181) and for review pursuant to the Atomic Energy Act (42 U.S.C. 218(c)).

7. A record from this system of records may be disclosed, as a routine use, to the Administrator, General Services, or his/her designee, during an inspection of records conducted by GSA as part of that agency's responsibility to recommend improvements in records management practices and programs, under authority of 44 U.S.C. 2904 and 2906. Such disclosure shall be made in accordance with the GSA regulations governing inspection of records for this purpose, and any other relevant (i.e., GSA or Commerce) directive. Such disclosure shall not be used to make determinations about individuals.

8. A record from this system of records may be disclosed, as a routine use, to the public after either publication of the application pursuant to 35 U.S.C. 122(b) or issuance of a patent pursuant to 35 U.S.C. 151. Further, a record may be disclosed, subject to the limitations of 37 CFR 1.14, as a routine use, to the public if the record was filed in an application which became abandoned or in which the proceedings were terminated and which application is referenced by either a published application, an application open to public inspections or an issued patent.

9. A record from this system of records may be disclosed, as a routine use, to a Federal, State, or local law enforcement agency, if the USPTO becomes aware of a violation or potential violation of law or regulation.

Microchip Ex. 1012, p. 8
Microchip v. Aptiv
IPR2024-00496

Doc Code: PA..
Document Description: Power of Attorney

PTO/AIA/82A (07-13)
Approved for use through 03/31/2021. OMB 0651-0035
U.S. Patent and Trademark Office; U.S. DEPARTMENT OF COMMERCE
Under the Paperwork Reduction Act of 1995, no persons are required to respond to a collection of information unless it displays a valid OMB control number.

TRANSMITTAL FOR POWER OF ATTORNEY TO ONE OR MORE REGISTERED PRACTITIONERS

NOTE: This form is to be submitted with the Power of Attorney by Applicant form (PTO/AIA/82B) to identify the application to which the Power of Attorney is directed, in accordance with 37 CFR 1.5, unless the application number and filing date are identified in the Power of Attorney by Applicant form. If neither form PTO/AIA/82A nor form PTO/AIA82B identifies the application to which the Power of Attorney is directed, the Power of Attorney will not be recognized in the application.

Application Number	
Filing Date	
First Named Inventor	Robert M. Voto
Title	FLEXIBLE MOBILE DEVICE CONNECTIVITY TO AUTOMOTIVE SYSTEMS WITH USB HUBS
Art Unit	
Examiner Name	
Attorney Docket Number	7021.145US5

SIGNATURE of Applicant or Patent Practitioner

Signature	/Robert Myers/	Date (Optional)	2021-10-11
Name	Robert Myers	Registration Number	69783
Title (if Applicant is a juristic entity)			
Applicant Name (if Applicant is a juristic entity)			

NOTE: This form must be signed in accordance with 37 CFR 1.33. See 37 CFR 1.4(d) for signature requirements and certifications. If more than one applicant, use multiple forms.

☑ *Total of 1 forms are submitted.

This collection of information is required by 37 CFR 1.131, 1.32, and 1.33. The information is required to obtain or retain a benefit by the public which is to file (and by the USPTO to process) an application. Confidentiality is governed by 35 U.S.C. 122 and 37 CFR 1.11 and 1.14. This collection is estimated to take 3 minutes to complete, including gathering, preparing, and submitting the completed application form to the USPTO. Time will vary depending upon the individual case. Any comments on the amount of time you require to complete this form and/or suggestions for reducing this burden, should be sent to the Chief Information Officer, U.S. Patent and Trademark Office, U.S. Department of Commerce, P.O. Box 1450, Alexandria, VA 22313-1450. DO NOT SEND FEES OR COMPLETED FORMS TO THIS ADDRESS. **SEND TO: Commissioner for Patents, P.O. Box 1450, Alexandria, VA 22313-1450.**

If you need assistance in completing the form, call 1-800-PTO-9199 and select option 2.

Doc Code: PA..
Document Description: Power of Attorney

PTO/AIA/82B (07-13)
Approved for use through 03/31/2021. OMB 0651-0035
U.S. Patent and Trademark Office; U.S. DEPARTMENT OF COMMERCE
Under the Paperwork Reduction Act of 1995, no persons are required to respond to a collection of information unless it displays a valid OMB control number

POWER OF ATTORNEY BY APPLICANT

I hereby revoke all previous powers of attorney given in the application identified in either the attached transmittal letter or the boxes below.

Application Number	Filing Date

(Note: The boxes above may be left blank if information is provided on form PTO/AIA/82A.)

☑ I hereby appoint the Patent Practitioner(s) associated with the following Customer Number as my/our attorney(s) or agent(s), and to transact all business in the United States Patent and Trademark Office connected therewith for the application referenced in the attached transmittal letter (form PTO/AIA/82A) or identified above: 171991

OR

☐ I hereby appoint Practitioner(s) named in the attached list (form PTO/AIA/82C) as my/our attorney(s) or agent(s), and to transact all business in the United States Patent and Trademark Office connected therewith for the patent application referenced in the attached transmittal letter (form PTO/AIA/82A) or identified above. (Note: Complete form PTO/AIA/82C.)

Please recognize or change the correspondence address for the application identified in the attached transmittal letter or the boxes above to:

☑ The address associated with the above-mentioned Customer Number

OR

☐ The address associated with Customer Number:

OR

☐ Firm or Individual Name					
Address					
City		State		Zip	
Country					
Telephone		Email			

I am the Applicant (if the Applicant is a juristic entity, list the Applicant name in the box):

Aptiv Technologies Limited

☐ Inventor or Joint Inventor (title not required below)

☐ Legal Representative of a Deceased or Legally Incapacitated Inventor (title not required below)

☑ Assignee or Person to Whom the Inventor is Under an Obligation to Assign (provide signer's title if applicant is a juristic entity)

☐ Person Who Otherwise Shows Sufficient Proprietary Interest (e.g., a petition under 37 CFR 1.46(b)(2) was granted in the application or is concurrently being filed with this document) (provide signer's title if applicant is a juristic entity)

SIGNATURE of Applicant for Patent

The undersigned (whose title is supplied below) is authorized to act on behalf of the applicant (e.g., where the applicant is a juristic entity).

Signature	/Robert E. Ray/	Date (Optional)	7/1/2020
Name	Robert E. Ray		
Title	Assistant Secretary		

NOTE: Signature - This form must be signed by the applicant in accordance with 37 CFR 1.33. See 37 CFR 1.4 for signature requirements and certifications. If more than one applicant, use multiple forms.

☑ Total of 1 forms are submitted.

This collection of information is required by 37 CFR 1.131, 1.32, and 1.33. The information is required to obtain or retain a benefit by the public which is to file (and by the USPTO to process) an application. Confidentiality is governed by 35 U.S.C. 122 and 37 CFR 1.11 and 1.14. This collection is estimated to take 3 minutes to complete, including gathering, preparing, and submitting the completed application form to the USPTO. Time will vary depending upon the individual case. Any comments on the amount of time you require to complete this form and/or suggestions for reducing this burden, should be sent to the Chief Information Officer, U.S. Patent and Trademark Office, U.S. Department of Commerce, P.O. Box 1450, Alexandria, VA 22313-1450. DO NOT SEND FEES OR COMPLETED FORMS TO THIS ADDRESS. **SEND TO: Commissioner for Patents, P.O. Box 1450, Alexandria, VA 22313-1450.**

If you need assistance in completing the form, call 1-800-PTO-9199 and select option 2.

Electronic Patent Application Fee Transmittal

Application Number:	
Filing Date:	
Title of Invention:	FLEXIBLE MOBILE DEVICE CONNECTIVITY TO AUTOMOTIVE SYSTEMS WITH USB HUBS
First Named Inventor/Applicant Name:	Robert M. Voto
Filer:	Robert James Myers/LaTasha Hill
Attorney Docket Number:	7021.145US5

Filed as Large Entity

Filing Fees for Utility under 35 USC 111(a)

Description	Fee Code	Quantity	Amount	Sub-Total in USD($)
Basic Filing:				
UTILITY APPLICATION FILING	1011	1	320	320
UTILITY SEARCH FEE	1111	1	700	700
UTILITY EXAMINATION FEE	1311	1	800	800
Pages:				
Claims:				
Miscellaneous-Filing:				
Petition:				
Patent-Appeals-and-Interference:				

Description	Fee Code	Quantity	Amount	Sub-Total in USD($)
Post-Allowance-and-Post-Issuance:				
Extension-of-Time:				
Miscellaneous:				
			Total in USD ($)	**1820**

Electronic Acknowledgement Receipt

EFS ID:	43994004
Application Number:	17498045
International Application Number:	
Confirmation Number:	2854
Title of Invention:	FLEXIBLE MOBILE DEVICE CONNECTIVITY TO AUTOMOTIVE SYSTEMS WITH USB HUBS
First Named Inventor/Applicant Name:	Robert M. Voto
Customer Number:	171991
Filer:	Robert James Myers/LaTasha Hill
Filer Authorized By:	Robert James Myers
Attorney Docket Number:	7021.145US5
Receipt Date:	11-OCT-2021
Filing Date:	
Time Stamp:	11:00:51
Application Type:	Utility under 35 USC 111(a)

Payment information:

Submitted with Payment	yes
Payment Type	CARD
Payment was successfully received in RAM	$1820
RAM confirmation Number	E20210AB01194076
Deposit Account	
Authorized User	
The Director of the USPTO is hereby authorized to charge indicated fees and credit any overpayment as follows:	

File Listing:

Document Number	Document Description	File Name	File Size(Bytes)/ Message Digest	Multi Part /.zip	Pages (if appl.)
1		7021145US5_APP.pdf	91795 ecc085d61faffc9d26d20dd444e5b4eae3b1a6c4	yes	21
	Multipart Description/PDF files in .zip description				
	Document Description		**Start**	**End**	
	Specification		1	16	
	Claims		17	20	
	Abstract		21	21	
Warnings:					
Information:					
2	Application Data Sheet	7021145US5_ADS.pdf	1823479 2b749f0859053e166a75681054448040bb5ccaeb	no	9
Warnings:					
Information:					
3	Oath or Declaration filed	7021145US5_DEC-ASSN.pdf	131384 755914c4edd19564cfe39e99a044aacbed1d4a8a	no	2
Warnings:					
Information:					
4	Drawings-only black and white line drawings	7021145US5_DRWGS.pdf	434563 323764037147e510448b330416feb487a949ce15	no	8
Warnings:					
Information:					
5	Information Disclosure Statement (IDS) Form (SB08)	7021145US5_IDS.pdf	613947 2df335889b9264d0001dd93a27cdd94dc86a8b34	no	8

Warnings:					
Information:					
6	Power of Attorney	7021145US5_POA.pdf	238005 b0497a0a6e81d362c2cb73cf1438876354f78a82	no	2
Warnings:					
Information:					
7	Fee Worksheet (SB06)	fee-info.pdf	44144 90948a85a7ccf0f51a9a36c55fcb3fbe6842e9ea	no	2
Warnings:					
Information:					
			Total Files Size (in bytes):	3377317	

This Acknowledgement Receipt evidences receipt on the noted date by the USPTO of the indicated documents, characterized by the applicant, and including page counts, where applicable. It serves as evidence of receipt similar to a Post Card, as described in MPEP 503.

<u>New Applications Under 35 U.S.C. 111</u>
If a new application is being filed and the application includes the necessary components for a filing date (see 37 CFR 1.53(b)-(d) and MPEP 506), a Filing Receipt (37 CFR 1.54) will be issued in due course and the date shown on this Acknowledgement Receipt will establish the filing date of the application.
<u>National Stage of an International Application under 35 U.S.C. 371</u>
If a timely submission to enter the national stage of an international application is compliant with the conditions of 35 U.S.C. 371 and other applicable requirements a Form PCT/DO/EO/903 indicating acceptance of the application as a national stage submission under 35 U.S.C. 371 will be issued in addition to the Filing Receipt, in due course.
<u>New International Application Filed with the USPTO as a Receiving Office</u>
If a new international application is being filed and the international application includes the necessary components for an international filing date (see PCT Article 11 and MPEP 1810), a Notification of the International Application Number and of the International Filing Date (Form PCT/RO/105) will be issued in due course, subject to prescriptions concerning national security, and the date shown on this Acknowledgement Receipt will establish the international filing date of the application.

FLEXIBLE MOBILE DEVICE CONNECTIVITY TO AUTOMOTIVE SYSTEMS WITH USB HUBS

Related Applications

This application is a continuation application and claims benefit of co-pending U.S. Patent Application No. 16/660,083, filed October 22, 2019, which claimed benefit of U.S. Patent Application No. 15/441,775, now U.S. Patent No. 10,545,899, filed February 24, 2017, which claimed benefit of U.S. Patent Application No. 15/268,728, now U.S. Patent No. 9,619,420, filed September 19, 2016, which claimed benefit of U.S. Patent Application No. 14/487,947, now U.S. Patent No. 9,460,037, filed on September 16, 2014, which claimed benefit of U.S. Provisional Patent Application No. 61/882,915, filed on September 26, 2013, the entire disclosure of each of which are hereby incorporated by reference.

Background

The present invention generally relates to Universal Serial Bus ("USB") connectivity between, for example, mobile consumer devices and vehicle electronic systems. More specifically, the present invention relates to a system which is configured to provide that consumer devices that act as either USB host or USB device can connect to a vehicle's embedded USB host that does not have On the Go ("OTG") capability through an embedded USB hub in the vehicle.

Historically, mobile consumer devices such as media players, smart phones, tablets and the like have relied on connections to other devices, such as laptop or desktop personal computers ("PC's") to acquire content, exchange data, and charge the device's internal battery. For many years now, that has been accomplished through USB ports on each device. The use of USB

Microchip Ex. 1012, p. 16
Microchip v. Aptiv
IPR2024-00496

technology is suitable for such needs since it is commonly available, familiar to the end user, cost effective and ubiquitous. USB protocols require a point-to-point connection in which one end is the USB Host or master, and the other end is a USB Device or slave. In this way, the flow of messages between the two devices is managed and controlled, whereby the USB Device responds to messages initiated by the USB Host. Historically, PC's have provided USB Host ports for connection to simpler USB Devices such as printers, memory sticks, mobile phones, etc. The USB Host has a greater burden of software and hardware requirements than a USB Device, so it has made sense to designate the PC as the USB Host in such systems.

In vehicle systems that employ USB connections, the same concepts apply. In such systems, the vehicle is typically the USB Host. The USB Host function is often embedded into a component of the vehicle infotainment system, such as into the radio or other control module. Typically, multiple USB ports are strategically designed into the vehicle in locations convenient for the driver and passengers to connect their consumer devices. Once a consumer device is connected to one of the ports, the device begins charging and the vehicle infotainment system can access content on the consumer device. This is useful to enable features such as streaming music, video and other services the device may provide.

Such a system requires that each of the USB ports be physically connected to the vehicle's USB Host in a manner suitable for USB data flow. This is accomplished through electrical cabling which is embedded in the vehicle, and which connects each of the ports to the USB Host. Since there can be many USB ports in a vehicle, and each port requires a cable to connect the port to the USB Host, it is desirable to share cabling, when possible, to minimize cost and mass of the vehicle. This is accomplished through the use of USB Hubs. USB Hubs allow a single USB Host to connect

Microchip Ex. 1012, p. 17
Microchip v. Aptiv
IPR2024-00496

to multiple USB Devices over a single cable between the USB Host and the USB Hub. As shown in Figures 1 and 2, a single USB Hub can connect one USB Host to several USB Devices. Specifically, Figure 1 illustrates a system wherein a self-powered USB Hub having a plurality of USB ports connects to a plurality of USB Devices (via a plurality of consumer-facing USB ports), while Figure 2 illustrates a system wherein a self-powered USB Hub provides not only a plurality of USB ports which are in communication with a plurality of consumer-facing USB ports, but also a Secure Digital ("SD") card reader which is connected to a consumer-facing SD card connector. Other portions of Figures 1 and 2, such as Power Management, are standard in the industry and self-explanatory upon viewing Figures 1 and 2.

Furthermore, as shown in Figure 3, multiple USB Hubs can be tiered, such that USB Hubs connect to other USB Hubs. Specifically, Figure 3 illustrates a vehicle system architecture that includes a central vehicle microcontroller (also referred to as the Head Unit or "HU"). Connected to the Head Unit are components or systems such as displays, the audio system, entertainment system and the driver controls. The Head Unit may be architected as a single module encompassing all functions or distributed such that various functions are managed by individual modules. The Head Unit includes a Root USB Hub which is typically connected to one or more downstream USB Hubs distributed throughout the vehicle. Each USB Hub has a plurality of downstream ports (at least one of which may be an SD reader or USB audio device), thereby effectively providing that each USB port in the vehicle has a connection to the USB Host or Head Unit. In Figure 3, for example, the Root Hub is embedded in the radio, and is connected to four (4) self-powered USB Hubs, wherein one is in the vehicle's center console, one is in the vehicle's center stack, and two are in the vehicle's rear seats.

Recently, mobile devices such as smart phones have gained in popularity. This is, in part, due to their usefulness as standalone computing devices. With advances in consumer electronic technology and increases in the speed of mobile networks, these devices are no longer reliant on being connected to PCs to access content. These smart mobile devices now have many of the same hardware resources, connectivity and software operating systems that only PCs had in past years. As has been the case with desktop PCs, accessories for these mobile devices have become available to aid in their ease of use. These accessories have included devices such as keyboards, mice, displays, touchscreen, audio systems, and other interface devices. These accessories commonly connect via a USB connection. By way of established convention in the consumer electronics market, these accessories are typically low cost and limited in USB capability to act only as a USB Device. To connect them to a smart phone, the smart phone must be the USB Host. Therefore, leading mobile device manufacturers and system designers have begun designing their mobile device products (i.e., smart phones, tablets, etc.) to support both USB Host and USB Device roles. In other words, the phone may configure itself such that it can function as a USB Device when it needs to be, or as a USB Host when it needs to be. Recently, the system level design thinking has shifted towards viewing smart phones as the USB Host, and any device connecting thereto as the USB Device. Again, this is not surprising since this is exactly how laptops and PCs work today. Extending this trend into the future, it can be predicted that the smart phone will act primarily as the USB Host and will rarely or never act as a USB device. This presents some problems for automotive systems.

As explained previously, automotive systems have a USB Host and require USB Devices to connect to it. If a phone acts as a USB Host, then the system will not function since by USB

Microchip Ex. 1012, p. 19
Microchip v. Aptiv
IPR2024-00496

convention, two USB Hosts cannot directly connect with each other. Automotive manufacturers desire compatibility with smart phones and are therefore motivated to adapt to this changing technology. A redesign of the USB architecture in the vehicle is thus necessary such that the vehicle can act either as the USB Host (when necessary to connect to USB Devices such as memory sticks, thumb drives, etc.) or USB Device (when necessary to connect to USB Hosts, such as a smart phone which demands to be USB Host rather than USB Device.

The USB organization has added a standard that addresses the need for devices to act as either USB Host or USB Device and as such can be considered a "dual role" USB controller. It is referred to in USB nomenclature as "On the Go" or "OTG" for short. Any device that meets the OTG standard can act as either USB Host or USB Device and can change roles dynamically. Therefore, one possible approach to modifying the vehicle USB architecture to support all use cases is to upgrade the vehicle's USB Host to USB OTG. This solution addresses the issue but has some disadvantages. First, USB Hubs do not support OTG and can no longer be used in the system. Each consumer accessible USB port that supports OTG must have a dedicated wire link to a dedicated OTG controller in the Head Unit thus negating the wiring savings associated with use of USB Hubs. As a result, several costly cables may need to be added to the vehicle's electrical system. Second, there may not be enough OTG controllers available in the Head Unit to connect to each of the vehicle's user accessible USB ports. This then forces the vehicle designer to choose a limited number of the many USB ports in the vehicle to support the OTG function and run dedicated USB cables to them. This can lead to user confusion and dissatisfaction since only certain consumer ports support the required functionality. Also, ports that support OTG may be

Microchip Ex. 1012, p. 20
Microchip v. Aptiv
IPR2024-00496

co-located with other physically identical ports that do not. If the user chooses the wrong one, the applications they desire to run from the consumer device that requires USB Host mode won't work.

Another possible solution is to implement custom USB hubs wherein the USB Hub is able to dynamically swap its upstream port with one it's downstream ports when commanded to do so. System solutions built with this concept still require OTG controllers in the head unit but benefit from the fact that no additional wires need to be installed in the car. The existing USB cable between the USB OTG Host and the USB Hub can facilitate the necessary USB communications between the USB OTG controller in the Head Unit (HU) and a consumer device in USB Host (such as a smart phone). This solution also has some disadvantages, however. For example, when the USB Hub is commanded to swap its upstream port with a downstream port, all other downstream ports of the USB Hubs lose their data connection with the Head Unit. While in this mode the Head Unit access to the other downstream ports of the hub cease. This may prevent use of certain vehicle system functions such as navigation or audio playback that may need consistent access to the other downstream ports of the hub to function. Furthermore, it requires the HU to have an available USB OTG port and a signaling path to control the hub upstream/downstream port configuration.

Microchip Ex. 1012, p. 21
Microchip v. Aptiv
IPR2024-00496

Summary

An object of an embodiment of the present invention is to provide a system which is configured to enable a vehicle's embedded USB Host system to connect to mobile devices through a USB Hub, regardless of whether the mobile devices are configured to act as USB Hosts or USB Devices, without the need to provide OTG or dual role controllers in the head unit and without the need to provide additional cabling in the vehicle. Preferably, no hardware changes are required to be made to the USB Host circuits in the HU.

An embodiment of the present invention provides a system which can be employed between a vehicle's embedded USB Host and at least one, but preferably multiple, consumer facing USB ports provided in the vehicle for connection to consumer devices. The system is configured to recognize and control whether the consumer device is required to be connected to each USB port as a USB Host or as a USB Device. Further, the system is able to dynamically switch the device connection between USB Device mode and USB Host mode when desired. In the case where the consumer device is acting as a USB Device, signals are routed normally through a USB Hub to the Head Unit. In the case where the consumer device is acting as a USB Host, signals between the consumer device and the vehicle's embedded USB Host are routed and processed through a USB Host to Host Bridge which is connected to the USB Hub, thereby rendering the consumer device compatible with the vehicle's embedded USB Host.

The present invention is capable of being implemented in several different embodiments. For example, an embodiment of the present invention comprises a USB Hub Module having a USB Hub, USB Bridge, and USB routing switches implemented as discrete devices. The USB Hub

Microchip Ex. 1012, p. 22
Microchip v. Aptiv
IPR2024-00496

upstream port is configured to be connected to a vehicle's embedded USB Host (such as a USB Host in a Head Unit). The USB Hub Module also includes a switching device (such as USB analog multiplexing switches for example) that is configured to route each consumer port to either the Bridge or the Hub. The USB Bridge is configured to effectively control the switching device. The USB Bridge is configured, based on signals from the Head Unit, whether the consumer device which is connected to the USB port is acting as USB Host or USB Device. In the case where the consumer device is acting as USB Host, the USB Bridge controls the switching device to route the USB port to the Bridge. The Bridge processes the signals from the consumer device and provides them to the USB Hub, thereby rendering the consumer device compatible with the vehicle's embedded USB Host. In the case where the consumer device is acting as USB Device, the USB Bridge controls the switching device such that the switching device provides the signals to the USB Hub, effectively bypassing the Bridge.

Still another embodiment of the present invention provides that the USB routing logic, USB Bridge, and USB Hub are integrated in a single combination USB Hub/USB Bridge Integrated Circuit (IC).

Still other embodiments are entirely possible, some of which are described and illustrated herein. For example, the concept can be extended to include additional embedded USB Device functions such as USB HID and USB Audio. Further it is also envisioned that all consumer facing USB ports of the Hub Module can emulate or otherwise support dual role USB capability provided that each downstream port has a Bridge to support USB Host mode for the connected device and a direct connection to the USB Hub to support USB Device mode. In all cases, compliance to USB protocols and architectures is preferably maintained.

Microchip Ex. 1012, p. 23
Microchip v. Aptiv
IPR2024-00496

Brief Description of the Drawings

The organization and manner of the structure and operation of the invention, together with further objects and advantages thereof, may best be understood by reference to the following description taken in connection with the accompanying drawings wherein like reference numerals identify like elements in which:

Figure 1 illustrates a system wherein a multiple port self-powered USB Hub functions to connect a single USB Host to a plurality of USB ports;

Figure 2 illustrates a system wherein a self-powered USB Hub provides not only a plurality of USB ports, but also a Secure Digital ("SD") card reader;

Figure 3 illustrates a vehicle infotainment system structure wherein multiple USB Hubs are connected together or tiered, such that USB Hubs feed other USB Hubs;

Figure 4 illustrates a system which is in accordance with an embodiment of the present invention, wherein a USB Hub, USB Bridge and a switching device are provided as discrete components;

Figure 5 illustrates a system which is in accordance with an alternative embodiment of the present invention, wherein USB routing/switching logic and a USB Bridge are integrated with a USB Hub in a combination USB Hub/USB Bridge Integrated Circuit (IC);

Figure 6 illustrates the different components of the combination USB Hub/Bridge IC shown in Figure 5;

Microchip Ex. 1012, p. 24
Microchip v. Aptiv
IPR2024-00496

Figure 7 illustrates one possible endpoint configuration of the USB Bridge shown in Figures 5 and 6; and

Figure 8 illustrates an example implementation of a Head Unit Software Architecture.

Description of Illustrated Embodiments

While this invention may be susceptible to embodiment in different forms, there are specific embodiments shown in the drawings and will be described herein in detail, with the understanding that the present disclosure is to be considered an exemplification of the principles of the invention and is not intended to limit the invention to that as illustrated.

Figure 4 illustrates a system which is in accordance with an embodiment of the present invention. The system is configured to effectively render a vehicle's embedded USB Host compatible with consumer devices which are configured to also act as USB Host or USB Device. The system is in the form of a self-powered USB Hub Module having a USB, a USB Bridge, and a switching device implemented as discrete devices. The USB Hub is preferably provided in the form of an integrated circuit (IC) and is configured (via an upstream USB port) connected to a vehicle's embedded USB Host (such as a USB Host in a Head Unit) via vehicle internal wiring, such as, in one embodiment, via a single USB data cable between the Head Unit and USB Hub. The USB Hub also includes a plurality of downstream USB ports, at least one of which is connected to a USB Bridge (which also is preferably provided in the form of an integrated circuit (IC)). At least one downstream USB port of the USB Hub is connected to a switching device (such as USB analog multiplexing switches, for example). The switching device is configured to be connected to at least one USB port in the vehicle for connection to a consumer device. The USB

Microchip Ex. 1012, p. 25
Microchip v. Aptiv
IPR2024-00496

Bridge is configured to effectively control the switching device although other control mechanisms are envisioned. The USB Hub Module is configured such that signals received from at least one USB port are received by the switching device, and the switching device routes the signals to the USB Bridge or the USB Hub. In the case where the consumer device is acting as USB Host, the USB Bridge processes the USB packets from the consumer port and provides them to the USB Hub, thereby rendering the consumer device compatible with the vehicle's embedded USB Host. In the case where the consumer device is acting as USB Device, the USB Bridge controls the switching device such that the switching device provides the USB signaling directly to the USB Hub, bypassing the Bridge.

As shown in Figure 4, the system also includes Power Management structure, as well as some other conventional structure not specifically shown in Figure 4, but which would be readily assumed to be present by one having ordinary skill in the art.

In use, the Head Unit controls the switching device via the USB Bridge hardware or any other convenient means of control. The HU software application may choose to enable, for example, a phone on any one of the consumer USB ports, by requesting, commanding or otherwise knowing the phone is required to be in USB Host mode and commanding the routing of the specific USB port the phone is attached to the USB Bridge. Once routed to the USB Bridge, the phone will detect a USB Device is connected and the phone will begin the standard USB enumeration sequence. The detection and enumeration processes are defined by USB standards and not explained here in detail. However, for purposes of describing the operation of the invention, a general understanding is provided herein. The enumeration process follows a strict sequence of USB descriptor requests from the USB Host and USB descriptor responses from the USB Device

Microchip Ex. 1012, p. 26
Microchip v. Aptiv
IPR2024-00496

that allow the Host to determine the capabilities and functions of the Device and configure the USB Device for operation. Once the complete set of device descriptors are known the USB Host will then load the appropriate USB driver(s) and applications to support in the functionality that the USB Device provides. In the scope of this invention, it is envisioned that the responses to the descriptor requests made by the phone (USB Host) are either answered locally by the Bridge or preferably, the requests are forwarded through the Bridge to the Head Unit where its device drivers process the request and return the response. The descriptor responses from the device driver are conveyed to the USB Bridge, which then, in turn, passes them to the phone. By passing descriptor request to the Head Unit drivers and returning the responses from the Head Unit drivers back to the consumer device, the Bridge appears as a transparent component in the USB system architecture. The system capabilities are controlled by the Head Unit and the system remains flexible without need for changes to the Bridge firmware or hardware when the system designer requires changes to the descriptor responses. Once the consumer device completes the enumeration process, the Head Unit's USB functional capabilities are known to the consumer device and the consumer device may enable use of those functions over USB communication. At this point, the consumer device or the Head Unit may begin activating any number of supported services such as data connections, streaming audio and streaming video to and from the vehicle via the USB Bridge.

Another embodiment of the present invention can be provided, wherein the bridge is configured to act as an OTG port thus negating the need for switches and/or routing logic. In this case there would exist one Bridge functional block for each downstream port. This embodiment would effectively be a more generalized case of the example illustrated in Figure 4. Figure 4 shows just one Bridge that any one of the consumer USB ports can be routed to. With just one bridge,

Microchip Ex. 1012, p. 27
Microchip v. Aptiv
IPR2024-00496

only one consumer USB port can be connected to a USB host at a time. However, if each downstream port of the Hub has a dedicated Bridge, then multiple consumer ports can support connection to USB Host devices at the same time. Thus, any consumer port can be in either USB Host or USB Device mode at any time independently of the others.

Figure 5 illustrates an alternative embodiment wherein the switching device comprises USB routing logic, and both the USB routing logic and the USB Bridge are integrated with the USB Hub in a combination USB Hub/USB Bridge Integrated Circuit (IC). This configuration has cost and size advantages over building it with discrete components connected together on a printed circuit board.

Figure 6 illustrates the internal components of the USB Hub/USB Bridge Integrated Circuit (IC) shown in Figure 5. As shown, preferably the components of the USB Bridge include a bridge controller as well as endpoint buffers. While the exact configuration of endpoints is effectively up to the system designer to choose for a particular need, a specific example of one possible endpoint configuration is shown in Figure 7; however, many others are possible.

As shown in Figure 7, the endpoints of the Bridge may be designed to support multiple pipes of Bulk USB data connections between the Host A (Head Unit) and Host B (consumer device). In the Bridge, the IN endpoints of Device A are connected to the OUT endpoints of Device B and the OUT endpoints of Device A are connected to the IN endpoints of Device B. The design of the Bridge may be such that the data flow between the endpoints may be direct or buffered. For example, in the case of direct connection, once a USB packet is received from Host A on a Device A OUT endpoint, the internal logic of the Bridge moves to packet to the Device B IN endpoint if

Microchip Ex. 1012, p. 28
Microchip v. Aptiv
IPR2024-00496

it is available. If Device B IN endpoint is full or otherwise not available, then subsequent attempts of Host A to send more packets to Device A in the Bridge will be rejected until such time that the Device B IN endpoint is clear and the contents of the Device A OUT buffer is moved to it. Alternatively, there may exist a local buffer in the Bridge between the endpoints of Device A and B. For example, packets received on an OUT endpoint of Device A are placed in a local memory device for temporary storage until Device B IN endpoint is ready for them. The OUT endpoints are thus capable of receiving multiple packets from the Host until the buffer is full. Likewise, the IN endpoints may, at times, transmit multiple packets until the buffer is empty. Such buffers are not required, but are envisioned, to improve system throughput performance in certain circumstances where one of the USB Hosts is occasionally busy and not keeping up with USB transactions at the same rate as the other USB Host. Regardless of the buffer configuration, the Bridge hardware has IN and OUT endpoints on Device A mapped to OUT and IN endpoints respectively on Device B, thus forming a bidirectional bridge that passes USB traffic between two USB Hosts with bandwidth sufficient to support the application requirements of the system.

Also shown in Figure 7, Device A and Device B provide a bidirectional Control endpoint connected to their respective USB Hosts. Control endpoints are required per USB standard to support USB defined control messages between the Host and Device both during and after the enumeration sequence. Optionally, USB endpoints may also be utilized per USB standard to employ messages intended to control user defined custom device specific behavior, referred to as Vendor Specific messages. As can be seen in Figure 7, the Control endpoints are mapped to the Bridge Controller (BC). The BC logic may be implemented in hardware or preferably software. The BC provides the capability to send, receive and process USB standard Control endpoint

Microchip Ex. 1012, p. 29
Microchip v. Aptiv
IPR2024-00496

messages as well as vendor specific messages essential to the control and operation of the Bridge. At system startup, the A Host requests and receives descriptors from the BC via the Control endpoint. Once complete, Host A then loads the Bridge Driver in its software stack and configures the custom Bridge hardware for operation. Host A can then control the functions of the Bridge, such as USB switch routing control. The system is now ready to accept connection with USB Host mode consumer devices on the B Device of the Bridge. When such a connection is made, the BC will notify the Bridge Driver in Host A by sending a message on the control endpoint to Host A. Further, Host B will begin sending descriptor requests on the control endpoint to Device B in Bridge. The BC receives theses requests, encapsulates them with information that identifies them as descriptor requests from Host B and passes them to the Bridge Driver on Host using the control endpoint. Host A Bridge Driver receives these requests, identifies them as descriptor requests and passes the requests on to other software components in Host A system and waits for the descriptor responses. The descriptor responses are encapsulated by the Bridge driver to indicate they are descriptor responses that are to be forwarded to Host B. The response is then sent to the BC via the control endpoint. The BC receives them, identifies them as descriptor responses that should be forwarded to Device B and places them on the control endpoint for Device B. This process of receiving and forwarding messages back and forth between the two hosts continues until the enumeration process is complete with Host B. From that point on the two hosts may begin to use the IN and OUT endpoints to transfer application data and services over the bulk endpoints.

Figure 8 illustrates one possible configuration of the system architecture including software components in the Head Unit interfacing with the Bridge/Hub. There are multiple ways that the operating system and software architecture can be constructed to support the functions of the USB

Microchip Ex. 1012, p. 30
Microchip v. Aptiv
IPR2024-00496

Bridge/Hub. In Figure 8, a typical Linux implementation is shown including the Bridge/Hub Module and the Head Unit. The system design utilizes standard Linux Kernel components and configurations and should be familiar to those skilled in the art. The Head Unit USB Host Controller hardware is driven by the Host Controller Driver. The Host Controller Driver is connected to the USB Core. The USB Core connects the HCD with the standard USB Linux Device Drivers and the custom Bridge Driver. The Bridge Driver is configured to optionally connect directly to the User Space Application software or to the USB Gadget Driver depending on system architecture. The custom Bridge Driver plays a dual role of both controlling the functions of the Bridge hardware as well as providing a data path between the gadget device drivers and applications running on the Head Unit. The architecture illustrated is capable of handling both the operation and data paths associated with the Bridge and the Hub at the same time, thus allowing concurrent operation of consumer devices operating in USB Device mode with consumer devices operating in USB Host mode. In one embodiment, the Hub/Bridge supports simultaneous active USB data connections between the Head Unit and multiple consumer devices, at least one of which being in host mode while the others are in device mode. In another embodiment, the Hub/Bridge supports simultaneous active USB data connections between the Head Unit and some combination of embedded and consumer USB devices along with at least one device being in host mode. While it is understood that the software functions of the head unit are essential to building a complete system, the designs of which can vary significantly, and this example is provided only as a means of demonstrating one way to utilize the functionality of the present invention.

Microchip Ex. 1012, p. 31
Microchip v. Aptiv
IPR2024-00496

What is claimed is:

1. A method, comprising:

providing a first USB port for communication with a USB host;

providing a second USB port for communicating with a consumer USB device;

providing a signal detection circuit for receiving USB signals from the consumer USB device via the second USB port;

routing the USB signals emanating from the consumer USB device to the first USB port via a USB bridge and a USB hub in accordance with a determination by the signal detection circuit that the consumer device is operating in a USB host mode; and

routing the USB signals emanating from the consumer USB device to the first USB port via the USB hub and bypassing the USB bridge in accordance with a determination by the signal detection circuit that the consumer device is operating in a USB device mode.

2. The method according to claim 1, wherein the USB host is embedded in an infotainment system.

3. The method according to claim 1, wherein the bypassing the USB bridge is performed by a USB routing switch.

4. The method according to claim 3, wherein the USB routing switch includes the signal detection circuit.

5. A USB communication management method for interconnecting sources of USB signals, the method comprising:

Microchip Ex. 1012, p. 32
Microchip v. Aptiv
IPR2024-00496

receiving first USB host signals from a first USB host;

receiving second USB signals from a second USB signal source;

determining, via a signal detection circuit, whether the second USB signals emanate from a second USB host;

routing the second USB signals emanating from the second USB host via a USB bridge and a USB hub to the first USB host; and

routing the second USB signals not determined to emanate from a USB host via a USB hub to the first USB host while bypassing the USB bridge.

6. The USB communication management method according to claim 5, further comprising:

determining whether the second USB signals emanate from a USB device; and

routing the second USB signals determined to emanate from the USB device via a USB hub to the first USB host.

7. The USB communication management method according to claim 5, wherein the first USB host is embedded in an infotainment system.

8. The method according to claim 5, wherein the routing of the second USB signals is performed by a USB routing switch.

9. The method according to claim 8, wherein the USB routing switch includes the signal detection circuit.

10. A USB communication management method for interconnecting sources of USB signals, the method comprising:

receiving a first USB host signal from a first USB host;

receiving a second USB signal from a second USB signal source;

determining whether the second USB signal emanates from a second USB host;

establishing a first communication path via a USB bridge and a USB hub between the first USB host and the second USB signal source in accordance with the second signal emanating from the second USB host; and

establishing a second communication path via a USB hub between the first USB host and the second USB signal source thereby bypassing the USB bridge in accordance with the second USB signal not to emanating from the second USB host.

11. The USB communication management method according to claim 10, further comprising:

determining whether the second USB signal emanates from a USB device; and

establishing the second communication path via a USB hub between the first USB host and the second USB signal source which bypasses the USB bridge in accordance with the second USB signal emanating from the USB device.

12. The method according to claim 10, wherein the second communication path does not include the USB bridge.

13. The USB communication management method according to claim 12, wherein the first USB host is embedded in an infotainment system.

14. The method according to claim 10, wherein the establishment of the second communication path is performed by a USB routing switch.

15. The method according to claim 14, wherein the USB routing switch determines whether the second USB signal emanates from a USB device.

Abstract

A method to enable a vehicle's embedded USB Host system to connect to multiple mobile devices through a USB Hub, regardless of whether the mobile devices are configured to act as USB Hosts or USB Devices, without USB On the Go (OTG) controllers or additional vehicle wiring or inhibiting the functionality of any consumer devices connected to the same USB Hub. Preferably, the method is configured to provide that no additional cabling or hardware changes to accommodate this capability. The method can be employed between a vehicle's embedded USB Host, USB Hub and at least one consumer accessible USB port. When the consumer device is acting as a USB Host, signals between the consumer device and the vehicle's embedded USB Host are processed through a USB bridge, thereby rendering the consumer device compatible with the vehicle's embedded USB Host.

Microchip Ex. 1012, p. 36
Microchip v. Aptiv
IPR2024-00496

PTO/AIA/14 (11-15)
Approved for use through 04/30/2017. OMB 0651-0032
U.S. Patent and Trademark Office; U.S. DEPARTMENT OF COMMERCE
Under the Paperwork Reduction Act of 1995, no persons are required to respond to a collection of information unless it contains a valid OMB control number.

Application Data Sheet 37 CFR 1.76	Attorney Docket Number	7021.145US5
	Application Number	
Title of Invention	FLEXIBLE MOBILE DEVICE CONNECTIVITY TO AUTOMOTIVE SYSTEMS WITH USB HUBS	

The application data sheet is part of the provisional or nonprovisional application for which it is being submitted. The following form contains the bibliographic data arranged in a format specified by the United States Patent and Trademark Office as outlined in 37 CFR 1.76.
This document may be completed electronically and submitted to the Office in electronic format using the Electronic Filing System (EFS) or the document may be printed and included in a paper filed application.

Secrecy Order 37 CFR 5.2:

☐ Portions or all of the application associated with this Application Data Sheet may fall under a Secrecy Order pursuant to 37 CFR 5.2 (Paper filers only. Applications that fall under Secrecy Order may not be filed electronically.)

Inventor Information:

Inventor 1 Remove

Legal Name

Prefix	Given Name	Middle Name	Family Name	Suffix
	Robert	M.	Voto	

Residence Information (Select One) ● US Residency Non US Residency Active US Military Service

City	Clarkston	State/Province	MI	Country of Residence i	US

Mailing Address of Inventor:

Address 1	7054 Oakhurst Ridge
Address 2	
City	Clarkston
State/Province	MI
Postal Code	48348
Country i	US

Inventor 2 Remove

Legal Name

Prefix	Given Name	Middle Name	Family Name	Suffix
	Shyambabu		Yeda	

Residence Information (Select One) ◉ US Residency Non US Residency Active US Military Service

City	Rochester Hills	State/Province	MI	Country of Residence i	US

Mailing Address of Inventor:

Address 1	2134 Cattail Circle
Address 2	
City	Rochester Hills
State/Province	MI
Postal Code	48309
Country i	US

Inventor 3 Remove

Legal Name

Prefix	Given Name	Middle Name	Family Name	Suffix
	Craig		Petku	

Residence Information (Select One) ◉ US Residency Non US Residency Active US Military Service

Under the Paperwork Reduction Act of 1995, no persons are required to respond to a collection of information unless it contains a valid OMB control number.

Application Data Sheet 37 CFR 1.76	Attorney Docket Number	7021.145US5
	Application Number	
Title of Invention	FLEXIBLE MOBILE DEVICE CONNECTIVITY TO AUTOMOTIVE SYSTEMS WITH USB HUBS	

City	Clarkston	State/Province	MI	Country of Residence i	US

Mailing Address of Inventor:

Address 1	5188 Iroquois Court		
Address 2			
City	Clarkston	**State/Province**	MI
Postal Code	48348	**Country** i	US

All Inventors Must Be Listed - Additional Inventor Information blocks may be generated within this form by selecting the **Add** button. Add

Correspondence Information:

Enter either Customer Number or complete the Correspondence Information section below. For further information see 37 CFR 1.33(a).

☐ **An Address is being provided for the correspondence Information of this application.**

Customer Number	171991		
Email Address		Add Email	Remove Email

Application Information:

Title of the Invention	FLEXIBLE MOBILE DEVICE CONNECTIVITY TO AUTOMOTIVE SYSTEMS WITH USB HUBS		
Attorney Docket Number	7021.145US5	**Small Entity Status Claimed**	☐
Application Type	Nonprovisional		
Subject Matter	Utility		
Total Number of Drawing Sheets (if any)	8	**Suggested Figure for Publication (if any)**	

Filing By Reference:

Only complete this section when filing an application by reference under 35 U.S.C. 111(c) and 37 CFR 1.57(a). Do not complete this section if application papers including a specification and any drawings are being filed. Any domestic benefit or foreign priority information must be provided in the appropriate section(s) below (i.e., "Domestic Benefit/National Stage Information" and "Foreign Priority Information").

For the purposes of a filing date under 37 CFR 1.53(b), the description and any drawings of the present application are replaced by this reference to the previously filed application, subject to conditions and requirements of 37 CFR 1.57(a).

Application number of the previously filed application	Filing date (YYYY-MM-DD)	Intellectual Property Authority or Country i

Publication Information:

☐ Request Early Publication (Fee required at time of Request 37 CFR 1.219)

☐ **Request Not to Publish.** I hereby request that the attached application not be published under 35 U.S.C. 122(b) and certify that the invention disclosed in the attached application **has not and will not** be the subject of an application filed in another country, or under a multilateral international agreement, that requires publication at eighteen months after filing.

Under the Paperwork Reduction Act of 1995, no persons are required to respond to a collection of information unless it contains a valid OMB control number.

Application Data Sheet 37 CFR 1.76	Attorney Docket Number	7021.145US5
	Application Number	
Title of Invention	FLEXIBLE MOBILE DEVICE CONNECTIVITY TO AUTOMOTIVE SYSTEMS WITH USB HUBS	

Representative Information:

Representative information should be provided for all practitioners having a power of attorney in the application. Providing this information in the Application Data Sheet does not constitute a power of attorney in the application (see 37 CFR 1.32).
Either enter Customer Number or complete the Representative Name section below. If both sections are completed the customer Number will be used for the Representative Information during processing.

Please Select One:	● Customer Number	US Patent Practitioner	◯ Limited Recognition (37 CFR 11.9)
Customer Number	22851		

Domestic Benefit/National Stage Information:

This section allows for the applicant to either claim benefit under 35 U.S.C. 119(e), 120, 121, 365(c), or 386(c) or indicate National Stage entry from a PCT application. Providing benefit claim information in the Application Data Sheet constitutes the specific reference required by 35 U.S.C. 119(e) or 120, and 37 CFR 1.78.
When referring to the current application, please leave the "Application Number" field blank.

Prior Application Status	Pending		Remove
Application Number	Continuity Type	Prior Application Number	Filing or 371(c) Date (YYYY-MM-DD)
	Continuation of	16660083	2019-10-22
Prior Application Status	Pending		Remove
Application Number	Continuity Type	Prior Application Number	Filing or 371(c) Date (YYYY-MM-DD)
16660083	Continuation of	15441775	2017-02-24
Prior Application Status	Patented		Remove

Application Number	Continuity Type	Prior Application Number	Filing Date (YYYY-MM-DD)	Patent Number	Issue Date (YYYY-MM-DD)
15441775	Continuation of	15268728	2016-09-19	9619420	2017-04-11
Prior Application Status	Patented				Remove
Application Number	Continuity Type	Prior Application Number	Filing Date (YYYY-MM-DD)	Patent Number	Issue Date (YYYY-MM-DD)
15268728	Continuation of	14487947	2014-09-16	9460037	2016-10-04
Prior Application Status	Expired				Remove

Application Number	Continuity Type	Prior Application Number	Filing or 371(c) Date (YYYY-MM-DD)
14487947	Claims benefit of provisional	61/882915	2013-09-26

Additional Domestic Benefit/National Stage Data may be generated within this form by selecting the **Add** button. Add

Application Data Sheet 37 CFR 1.76	Attorney Docket Number	7021.145US5
	Application Number	
Title of Invention	FLEXIBLE MOBILE DEVICE CONNECTIVITY TO AUTOMOTIVE SYSTEMS WITH USB HUBS	

Foreign Priority Information:

This section allows for the applicant to claim priority to a foreign application. Providing this information in the application data sheet constitutes the claim for priority as required by 35 U.S.C. 119(b) and 37 CFR 1.55. When priority is claimed to a foreign application that is eligible for retrieval under the priority document exchange program (PDX)[i] the information will be used by the Office to automatically attempt retrieval pursuant to 37 CFR 1.55(i)(1) and (2). Under the PDX program, applicant bears the ultimate responsibility for ensuring that a copy of the foreign application is received by the Office from the participating foreign intellectual property office, or a certified copy of the foreign priority application is filed, within the time period specified in 37 CFR 1.55(g)(1).

Remove

Application Number	Country[i]	Filing Date (YYYY-MM-DD)	Access Code[i] (if applicable)

Additional Foreign Priority Data may be generated within this form by selecting the **Add** button. Add

Statement under 37 CFR 1.55 or 1.78 for AIA (First Inventor to File) Transition Applications

☐ This application (1) claims priority to or the benefit of an application filed before March 16, 2013 and (2) also contains, or contained at any time, a claim to a claimed invention that has an effective filing date on or after March 16, 2013.
NOTE: By providing this statement under 37 CFR 1.55 or 1.78, this application, with a filing date on or after March 16, 2013, will be examined under the first inventor to file provisions of the AIA.

Application Data Sheet 37 CFR 1.76	Attorney Docket Number	7021.145US5
	Application Number	
Title of Invention	FLEXIBLE MOBILE DEVICE CONNECTIVITY TO AUTOMOTIVE SYSTEMS WITH USB HUBS	

Authorization or Opt-Out of Authorization to Permit Access:

When this Application Data Sheet is properly signed and filed with the application, applicant has provided written authority to permit a participating foreign intellectual property (IP) office access to the instant application-as-filed (see paragraph A in subsection 1 below) and the European Patent Office (EPO) access to any search results from the instant application (see paragraph B in subsection 1 below).

Should applicant choose not to provide an authorization identified in subsection 1 below, applicant **must opt-out** of the authorization by checking the corresponding box A or B or both in subsection 2 below.

NOTE: This section of the Application Data Sheet is **ONLY** reviewed and processed with the **INITIAL** filing of an application. After the initial filing of an application, an Application Data Sheet cannot be used to provide or rescind authorization for access by a foreign IP office(s). Instead, Form PTO/SB/39 or PTO/SB/69 must be used as appropriate.

1. Authorization to Permit Access by a Foreign Intellectual Property Office(s)

A. Priority Document Exchange (PDX) - Unless box A in subsection 2 (opt-out of authorization) is checked, the undersigned hereby **grants the USPTO authority** to provide the European Patent Office (EPO), the Japan Patent Office (JPO), the Korean Intellectual Property Office (KIPO), the State Intellectual Property Office of the People's Republic of China (SIPO), the World Intellectual Property Organization (WIPO), and any other foreign intellectual property office participating with the USPTO in a bilateral or multilateral priority document exchange agreement in which a foreign application claiming priority to the instant patent application is filed, access to: (1) the instant patent application-as-filed and its related bibliographic data, (2) any foreign or domestic application to which priority or benefit is claimed by the instant application and its related bibliographic data, and (3) the date of filing of this Authorization. See 37 CFR 1.14(h)(1).

B. Search Results from U.S. Application to EPO - Unless box B in subsection 2 (opt-out of authorization) is checked, the undersigned hereby **grants the USPTO authority** to provide the EPO access to the bibliographic data and search results from the instant patent application when a European patent application claiming priority to the instant patent application is filed. See 37 CFR 1.14(h)(2).

The applicant is reminded that the EPO's Rule 141(1) EPC (European Patent Convention) requires applicants to submit a copy of search results from the instant application without delay in a European patent application that claims priority to the instant application.

2. Opt-Out of Authorizations to Permit Access by a Foreign Intellectual Property Office(s)

☐ A. Applicant **DOES NOT** authorize the USPTO to permit a participating foreign IP office access to the instant application-as-filed. If this box is checked, the USPTO will not be providing a participating foreign IP office with any documents and information identified in subsection 1A above.

☐ B. Applicant **DOES NOT** authorize the USPTO to transmit to the EPO any search results from the instant patent application. If this box is checked, the USPTO will not be providing the EPO with search results from the instant application.

NOTE: Once the application has published or is otherwise publicly available, the USPTO may provide access to the application in accordance with 37 CFR 1.14.

Under the Paperwork Reduction Act of 1995, no persons are required to respond to a collection of information unless it contains a valid OMB control number.

Application Data Sheet 37 CFR 1.76	Attorney Docket Number	7021.145US5
	Application Number	
Title of Invention	FLEXIBLE MOBILE DEVICE CONNECTIVITY TO AUTOMOTIVE SYSTEMS WITH USB HUBS	

Applicant Information:

Providing assignment information in this section does not substitute for compliance with any requirement of part 3 of Title 37 of CFR to have an assignment recorded by the Office.

Applicant 1 Remove

If the applicant is the inventor (or the remaining joint inventor or inventors under 37 CFR 1.45), this section should not be completed. The information to be provided in this section is the name and address of the legal representative who is the applicant under 37 CFR 1.43; or the name and address of the assignee, person to whom the inventor is under an obligation to assign the invention, or person who otherwise shows sufficient proprietary interest in the matter who is the applicant under 37 CFR 1.46. If the applicant is an applicant under 37 CFR 1.46 (assignee, person to whom the inventor is obligated to assign, or person who otherwise shows sufficient proprietary interest) together with one or more joint inventors, then the joint inventor or inventors who are also the applicant should be identified in this section.

Clear

● Assignee	Legal Representative under 35 U.S.C. 117	Joint Inventor
Person to whom the inventor is obligated to assign.	Person who shows sufficient proprietary interest	

If applicant is the legal representative, indicate the authority to file the patent application, the inventor is:

Name of the Deceased or Legally Incapacitated Inventor:

If the Applicant is an Organization check here. ☒

Organization Name	Aptiv Technologies Limited		
Mailing Address Information For Applicant:			
Address 1	The Financial Services Centre		
Address 2	Bishop's Court Hill		
City	St. Michael	**State/Province**	
Country	BB	Postal Code	14004
Phone Number		Fax Number	
Email Address			

Additional Applicant Data may be generated within this form by selecting the Add button. Add

Assignee Information including Non-Applicant Assignee Information:

Providing assignment information in this section does not substitute for compliance with any requirement of part 3 of Title 37 of CFR to have an assignment recorded by the Office.

Under the Paperwork Reduction Act of 1995, no persons are required to respond to a collection of information unless it contains a valid OMB control number.

Application Data Sheet 37 CFR 1.76	Attorney Docket Number	7021.145US5
	Application Number	
Title of Invention	FLEXIBLE MOBILE DEVICE CONNECTIVITY TO AUTOMOTIVE SYSTEMS WITH USB HUBS	

Assignee 1

Complete this section if assignee information, including non-applicant assignee information, is desired to be included on the patent application publication. An assignee-applicant identified in the "Applicant Information" section will appear on the patent application publication as an applicant. For an assignee-applicant, complete this section only if identification as an assignee is also desired on the patent application publication.

Remove

If the Assignee or Non-Applicant Assignee is an Organization check here. ☐

Prefix	**Given Name**	Middle Name	**Family Name**	Suffix

Mailing Address Information For Assignee including Non-Applicant Assignee:

Address 1			
Address 2			
City		**State/Province**	
Country i		Postal Code	
Phone Number		Fax Number	
Email Address			

Additional Assignee or Non-Applicant Assignee Data may be generated within this form by selecting the Add button. Add

Signature:

Remove

NOTE: This Application Data Sheet must be signed in accordance with 37 CFR 1.33(b). **However, if this Application Data Sheet is submitted with the INITIAL filing of the application and either box A or B is not checked in subsection 2 of the "Authorization or Opt-Out of Authorization to Permit Access" section, then this form must also be signed in accordance with 37 CFR 1.14(c).**

This Application Data Sheet **must** be signed by a patent practitioner if one or more of the applicants is a **juristic entity** (e.g., corporation or association). If the applicant is two or more joint inventors, this form must be signed by a patent practitioner, **all** joint inventors who are the applicant, or one or more joint inventor-applicants who have been given power of attorney (e.g., see USPTO Form PTO/AIA/81) on behalf of **all** joint inventor-applicants.

See 37 CFR 1.4(d) for the manner of making signatures and certifications.

Signature	/Robert Myers/			Date (YYYY-MM-DD)	2021-10-11
First Name	Robert	Last Name	Myers	Registration Number	69783

Additional Signature may be generated within this form by selecting the Add button. Add

Application Data Sheet 37 CFR 1.76	Attorney Docket Number	7021.145US5
	Application Number	
Title of Invention	FLEXIBLE MOBILE DEVICE CONNECTIVITY TO AUTOMOTIVE SYSTEMS WITH USB HUBS	

This collection of information is required by 37 CFR 1.76. The information is required to obtain or retain a benefit by the public which is to file (and by the USPTO to process) an application. Confidentiality is governed by 35 U.S.C. 122 and 37 CFR 1.14. This collection is estimated to take 23 minutes to complete, including gathering, preparing, and submitting the completed application data sheet form to the USPTO. Time will vary depending upon the individual case. Any comments on the amount of time you require to complete this form and/or suggestions for reducing this burden, should be sent to the Chief Information Officer, U.S. Patent and Trademark Office, U.S. Department of Commerce, P.O. Box 1450, Alexandria, VA 22313-1450. DO NOT SEND FEES OR COMPLETED FORMS TO THIS ADDRESS. **SEND TO: Commissioner for Patents, P.O. Box 1450, Alexandria, VA 22313-1450.**

Privacy Act Statement

The Privacy Act of 1974 (P.L. 93-579) requires that you be given certain information in connection with your submission of the attached form related to a patent application or patent. Accordingly, pursuant to the requirements of the Act, please be advised that: (1) the general authority for the collection of this information is 35 U.S.C. 2(b)(2); (2) furnishing of the information solicited is voluntary; and (3) the principal purpose for which the information is used by the U.S. Patent and Trademark Office is to process and/or examine your submission related to a patent application or patent. If you do not furnish the requested information, the U.S. Patent and Trademark Office may not be able to process and/or examine your submission, which may result in termination of proceedings or abandonment of the application or expiration of the patent.

The information provided by you in this form will be subject to the following routine uses:

1 The information on this form will be treated confidentially to the extent allowed under the Freedom of Information Act (5 U.S.C. 552) and the Privacy Act (5 U.S.C. 552a). Records from this system of records may be disclosed to the Department of Justice to determine whether the Freedom of Information Act requires disclosure of these records.

2. A record from this system of records may be disclosed, as a routine use, in the course of presenting evidence to a court, magistrate, or administrative tribunal, including disclosures to opposing counsel in the course of settlement negotiations.

3 A record in this system of records may be disclosed, as a routine use, to a Member of Congress submitting a request involving an individual, to whom the record pertains, when the individual has requested assistance from the Member with respect to the subject matter of the record.

4. A record in this system of records may be disclosed, as a routine use, to a contractor of the Agency having need for the information in order to perform a contract. Recipients of information shall be required to comply with the requirements of the Privacy Act of 1974, as amended, pursuant to 5 U.S.C. 552a(m).

5. A record related to an International Application filed under the Patent Cooperation Treaty in this system of records may be disclosed, as a routine use, to the International Bureau of the World Intellectual Property Organization, pursuant to the Patent CooperationTreaty.

6. A record in this system of records may be disclosed, as a routine use, to another federal agency for purposes of National Security review (35 U.S.C. 181) and for review pursuant to the Atomic Energy Act (42 U.S.C. 218(c)).

7. A record from this system of records may be disclosed, as a routine use, to the Administrator, General Services, or his/her designee, during an inspection of records conducted by GSA as part of that agency's responsibility to recommend improvements in records management practices and programs, under authority of 44 U.S.C. 2904 and 2906. Such disclosure shall be made in accordance with the GSA regulations governing inspection of records for this purpose, and any other relevant (i.e., GSA or Commerce) directive. Such disclosure shall not be used to make determinations about individuals.

8. A record from this system of records may be disclosed, as a routine use, to the public after either publication of the application pursuant to 35 U.S.C. 122(b) or issuance of a patent pursuant to 35 U.S.C. 151. Further, a record may be disclosed, subject to the limitations of 37 CFR 1.14, as a routine use, to the public if the record was filed in an application which became abandoned or in which the proceedings were terminated and which application is referenced by either a published application, an application open to public inspections or an issued patent.

9. A record from this system of records may be disclosed, as a routine use, to a Federal, State, or local law enforcement agency, if the USPTO becomes aware of a violation or potential violation of law or regulation.

DocuSign Envelope ID: 86FA4BBD-13FA-4792-8C72-20B2F4588C60

Combined Declaration and Assignment for Utility Patent and Design Patent Applications

DECLARATION

Docket No.: DP-322037 CON 3

Title of Invention: FLEXIBLE MOBILE DEVICE CONNECTIVITY TO AUTOMOTIVE SYSTEMS WITH USB HUBS

As a below named inventor, I hereby declare that this declaration is directed to:

☒ The attached application, or

☐ United States Application Number or PCT International Application Number _____ filed on _____.

The above-identified application was made or authorized to be made by me.

I believe I am the original inventor or an original joint inventor of a claimed invention in the application.

I hereby acknowledge that any willful false statement made in this declaration is punishable under 18 U.S.C. §1001 by fine or imprisonment of not more than five (5) years, or both.

ASSIGNMENT

Pursuant to an agreement with my employer, I formally assign to APTIV TECHNOLOGIES LIMITED, the entire right, title, and interest, in all countries, in the improvements set forth in the attached application or in the United States Application Number of PCT International Application Number listed above for which I executed a declaration dated as indicated below.

Hereby executed by the undersigned on the date opposite the undersigned name:

Legal Name Of Inventor DocuSigned by: Robert M. Voto 6447937785A544A... Date: 10/21/2019

Robert M. Voto

DocuSign Envelope ID: 86FA4BBD-13FA-4792-8C72-20B2F458BC60

Legal Name
Of Inventor

DocuSigned by:
Shyambabu Yeda
9A87D7371E0E4D9...

Date: 10/21/2019

Shyambabu Yeda

Legal Name
Of Inventor

DocuSigned by:
Craig Petku
8C818DBB2F384E7...

Date: 10/21/2019

Craig Petku

Figure 1

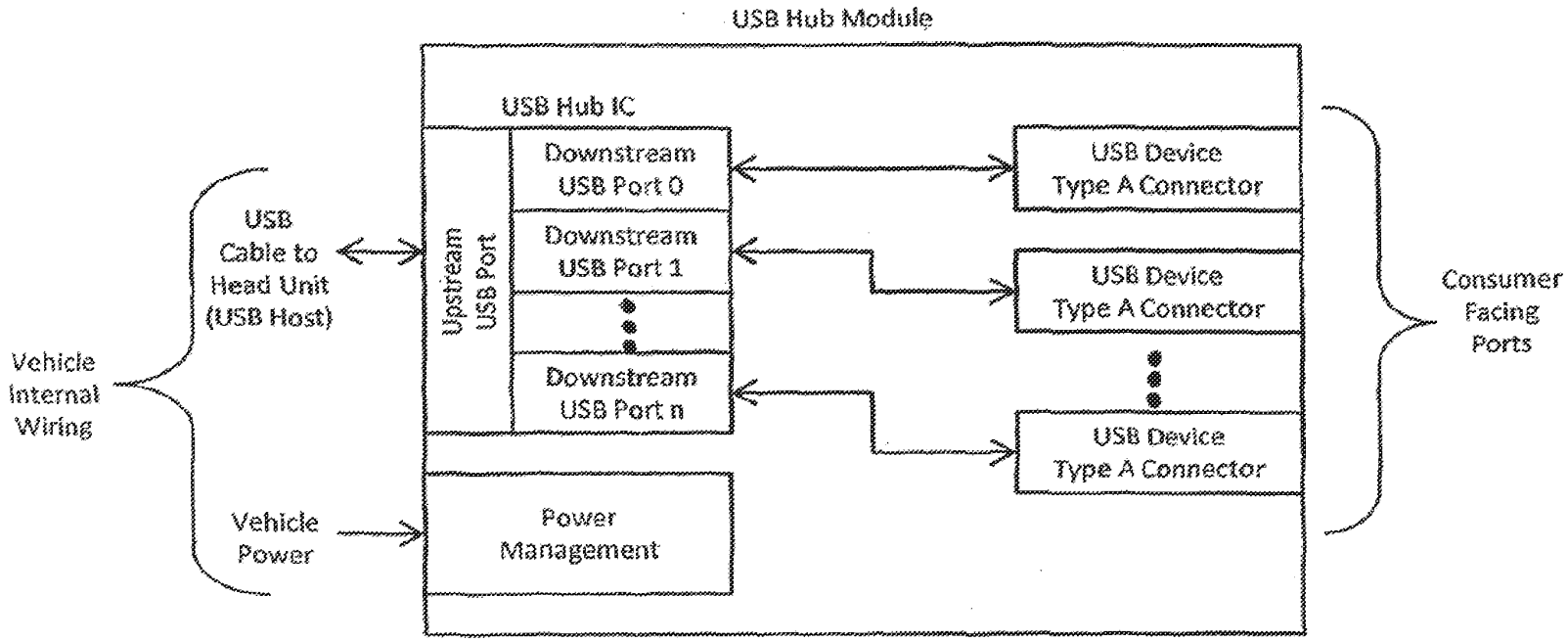
USB Hub Module
USB Hub IC
Upstream USB Port
Downstream USB Port 0
Downstream USB Port 1
Downstream USB Port n
USB Device Type A Connector
USB Device Type A Connector
USB Device Type A Connector
Consumer Facing Ports
USB Cable to Head Unit (USB Host)
Vehicle Internal Wiring
Vehicle Power
Power Management

Figure 2

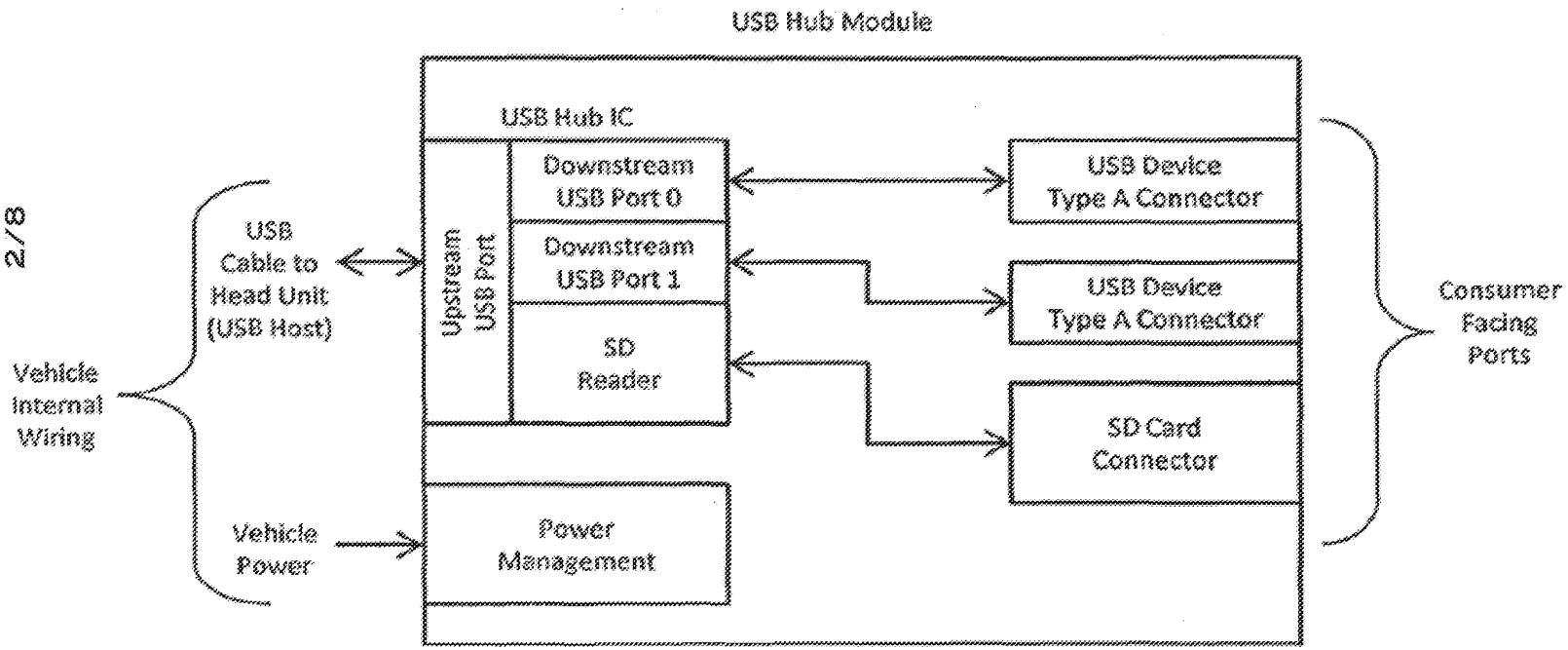
USB Hub Module
USB Hub IC
Upstream USB Port
Downstream USB Port 0
Downstream USB Port 1
SD Reader
Power Management
USB Cable to Head Unit (USB Host)
Vehicle Internal Wiring
Vehicle Power
USB Device Type A Connector
USB Device Type A Connector
SD Card Connector
Consumer Facing Ports

Figure 3

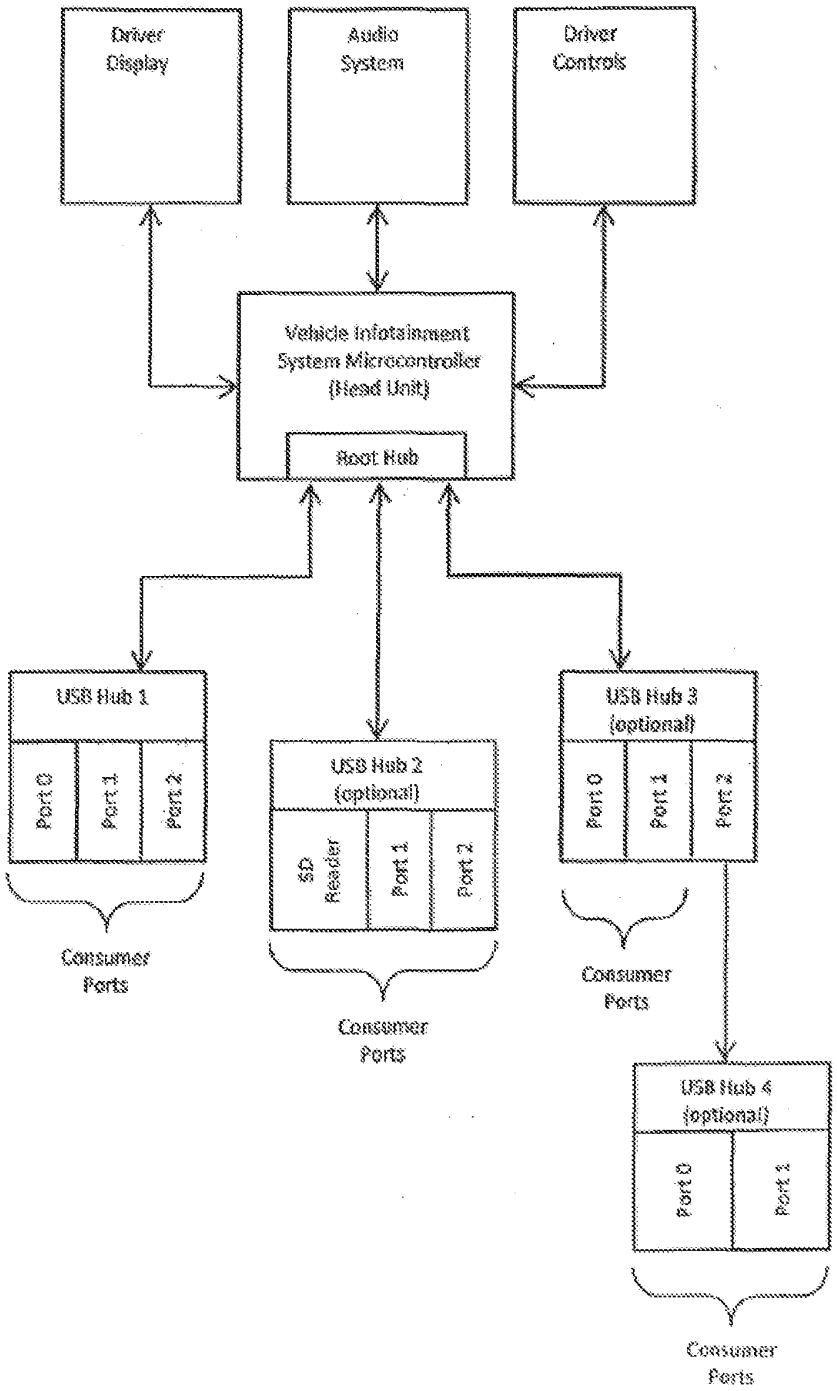
Driver Display
Audio System
Driver Controls
Vehicle Infotainment System Microcontroller (Head Unit)
Root Hub
USB Hub 1
Port 0
Port 1
Port 2
Consumer Ports
USB Hub 2 (optional)
SD Reader
Port 1
Port 2
Consumer Ports
USB Hub 3 (optional)
Port 0
Port 1
Port 2
Consumer Ports
USB Hub 4 (optional)
Port 0
Port 1
Consumer Ports

Figure 4

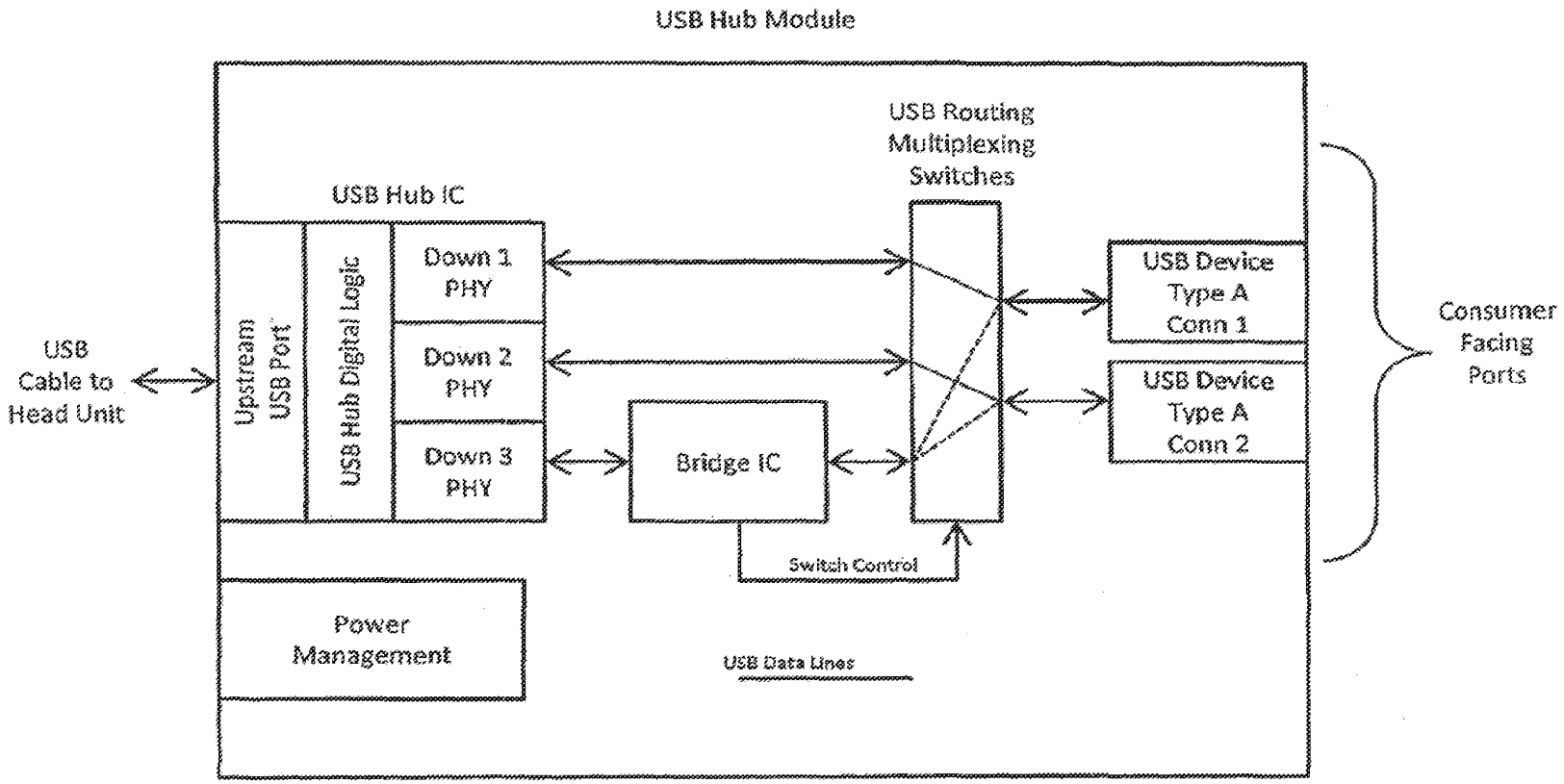
USB Hub Module
USB Hub IC
USB Routing Multiplexing Switches
USB Cable to Head Unit
Upstream USB Port
USB Hub Digital Logic
Down 1 PHY
Down 2 PHY
Down 3 PHY
Bridge IC
Switch Control
USB Device Type A Conn 1
USB Device Type A Conn 2
Consumer Facing Ports
Power Management
USB Data Lines

Figure 5

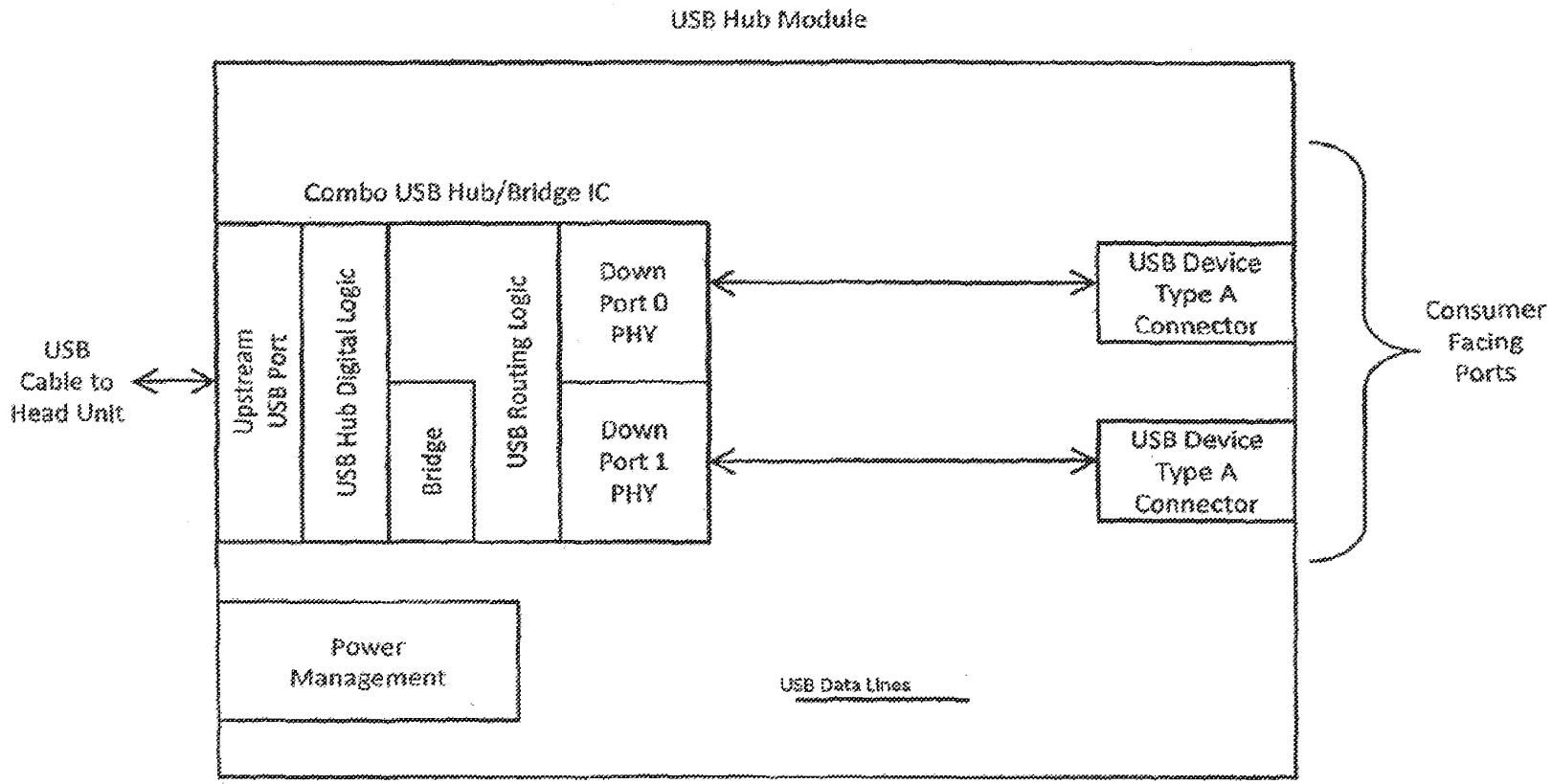
USB Hub Module
Combo USB Hub/Bridge IC
USB Cable to Head Unit
Upstream USB Port
USB Hub Digital Logic
Bridge
USB Routing Logic
Down Port 0 PHY
Down Port 1 PHY
USB Device Type A Connector
USB Device Type A Connector
Consumer Facing Ports
Power Management
USB Data Lines

Figure 6

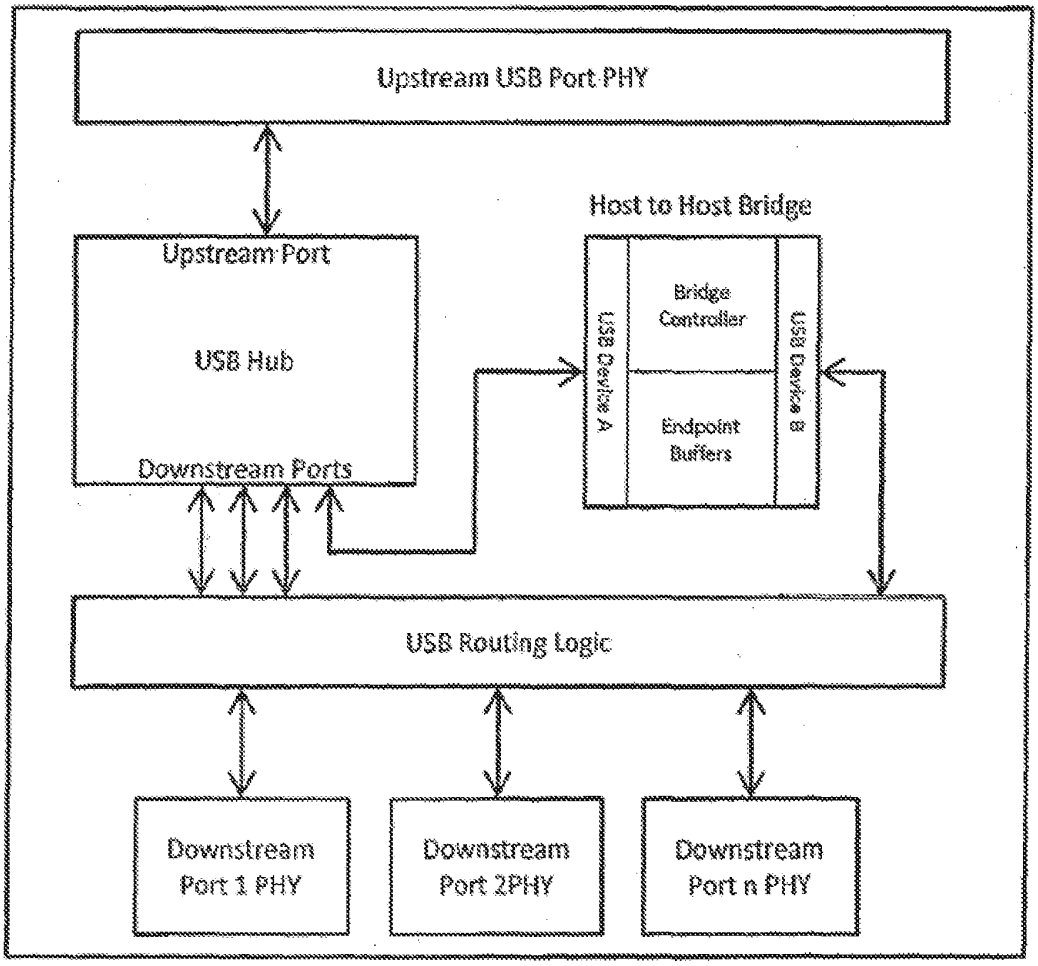
Upstream USB Port PHY
Host to Host Bridge
Upstream Port
USB Hub
Downstream Ports
USB Device A
Bridge Controller
Endpoint Buffers
USB Device B
USB Routing Logic
Downstream Port 1 PHY
Downstream Port 2PHY
Downstream Port n PHY

Figure 7

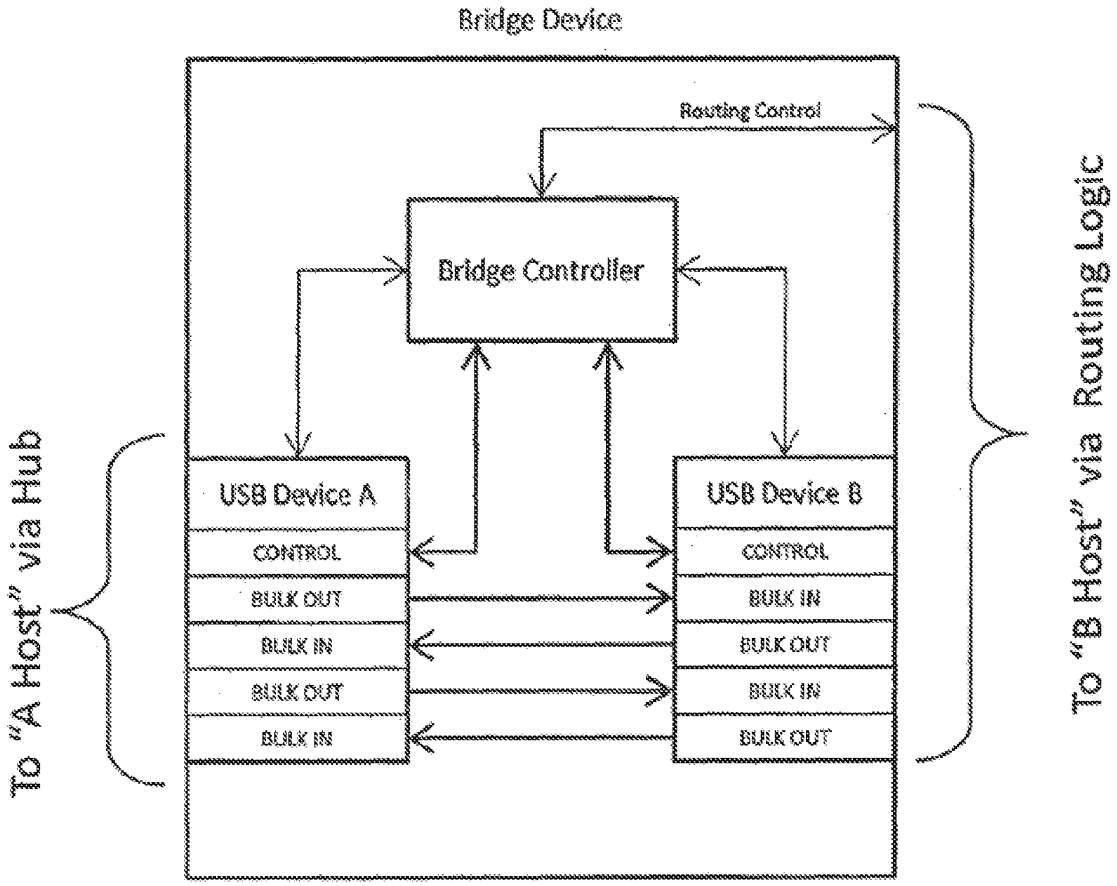
Bridge Device
Routing Control
Bridge Controller
USB Device A
CONTROL
BULK OUT
BULK IN
BULK OUT
BULK IN
USB Device B
CONTROL
BULK IN
BULK OUT
BULK IN
BULK OUT
To "A Host" via Hub
To "B Host" via Routing Logic

Figure 8

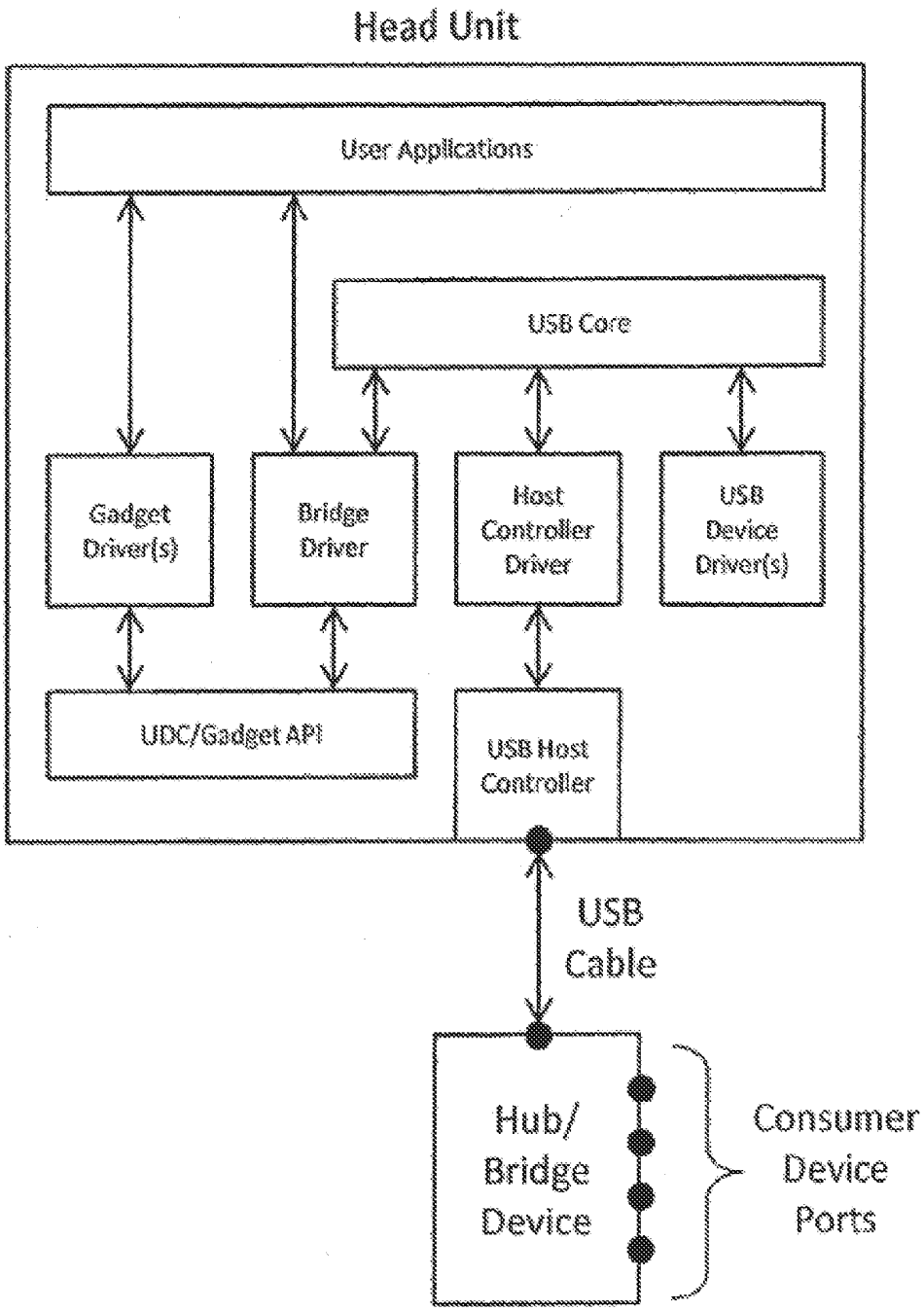
Head Unit
User Applications
USB Core
Gadget Driver(s)
Bridge Driver
Host Controller Driver
USB Device Driver(s)
UDC/Gadget API
USB Host Controller
USB Cable
Hub/ Bridge Device
Consumer Device Ports

UNITED STATES PATENT AND TRADEMARK OFFICE

UNITED STATES DEPARTMENT OF COMMERCE
United States Patent and Trademark Office
Address: COMMISSIONER FOR PATENTS
P.O. Box 1450
Alexandria, Virginia 22313-1450
www.uspto.gov

APPLICATION NUMBER	FILING or 371(c) DATE	GRP ART UNIT	FIL FEE REC'D	ATTY.DOCKET.NO	TOT CLAIMS	IND CLAIMS
17/498,045	10/11/2021		1820	7021.145US5	15	3

CONFIRMATION NO. 2854

FILING RECEIPT

OC000000129238055

171991
Billion & Armitage - Aptiv
7401 Metro Blvd.
Suite 425
Minneapolis, MN 55439

Date Mailed: 10/21/2021

Receipt is acknowledged of this non-provisional utility patent application. The application will be taken up for examination in due course. Applicant will be notified as to the results of the examination. Any correspondence concerning the application must include the following identification information: the U.S. APPLICATION NUMBER, FILING DATE, NAME OF FIRST INVENTOR, and TITLE OF INVENTION. Fees transmitted by check or draft are subject to collection.

Please verify the accuracy of the data presented on this receipt. If an error is noted on this Filing Receipt, please submit a written request for a corrected Filing Receipt, including a properly marked-up ADS showing the changes with strike-through for deletions and underlining for additions. If you received a "Notice to File Missing Parts" or other Notice requiring a response for this application, please submit any request for correction to this Filing Receipt with your reply to the Notice. When the USPTO processes the reply to the Notice, the USPTO will generate another Filing Receipt incorporating the requested corrections provided that the request is grantable.

Inventor(s)

Robert M. Voto, Clarkston, MI;
Shyambabu Yeda, Rochester Hills, MI;
Craig Petku, Clarkston, MI;

Applicant(s)

Aptiv Technologies Limited, St. Michael, BARBADOS;

Power of Attorney: The patent practitioners associated with Customer Number 171991

Domestic Priority data as claimed by applicant

This application is a CON of 16/660,083 10/22/2019
which is a CON of 15/441,775 02/24/2017 PAT 10545899
which is a CON of 15/268,728 09/19/2016 PAT 9619420
which is a CON of 14/487,947 09/16/2014 PAT 9460037
which claims benefit of 61/882,915 09/26/2013

Foreign Applications for which priority is claimed (You may be eligible to benefit from the **Patent Prosecution Highway** program at the USPTO. Please see http://www.uspto.gov for more information.) - None.
Foreign application information must be provided in an Application Data Sheet in order to constitute a claim to foreign priority. See 37 CFR 1.55 and 1.76.

Permission to Access Application via Priority Document Exchange: Yes

Microchip Ex. 1012, p. 56
Microchip v. Aptiv
IPR2024-00496

Permission to Access Search Results: Yes

Applicant may provide or rescind an authorization for access using Form PTO/SB/39 or Form PTO/SB/69 as appropriate.

If Required, Foreign Filing License Granted: 10/20/2021

The country code and number of your priority application, to be used for filing abroad under the Paris Convention, is **US 17/498,045**

Projected Publication Date: 01/27/2022

Non-Publication Request: No

Early Publication Request: No

Title

FLEXIBLE MOBILE DEVICE CONNECTIVITY TO AUTOMOTIVE SYSTEMS WITH USB HUBS

Preliminary Class

Statement under 37 CFR 1.55 or 1.78 for AIA (First Inventor to File) Transition Applications: No

PROTECTING YOUR INVENTION OUTSIDE THE UNITED STATES

Since the rights granted by a U.S. patent extend only throughout the territory of the United States and have no effect in a foreign country, an inventor who wishes patent protection in another country must apply for a patent in a specific country or in regional patent offices. Applicants may wish to consider the filing of an international application under the Patent Cooperation Treaty (PCT). An international (PCT) application generally has the same effect as a regular national patent application in each PCT-member country. The PCT process **simplifies** the filing of patent applications on the same invention in member countries, but **does not result** in a grant of "an international patent" and does not eliminate the need of applicants to file additional documents and fees in countries where patent protection is desired.

Almost every country has its own patent law, and a person desiring a patent in a particular country must make an application for patent in that country in accordance with its particular laws. Since the laws of many countries differ in various respects from the patent law of the United States, applicants are advised to seek guidance from specific foreign countries to ensure that patent rights are not lost prematurely.

Applicants also are advised that in the case of inventions made in the United States, the Director of the USPTO must issue a license before applicants can apply for a patent in a foreign country. The filing of a U.S. patent application serves as a request for a foreign filing license. The application's filing receipt contains further information and guidance as to the status of applicant's license for foreign filing.

Applicants may wish to consult the USPTO booklet, "General Information Concerning Patents" (specifically, the section entitled "Treaties and Foreign Patents") for more information on timeframes and deadlines for filing foreign patent applications. The guide is available either by contacting the USPTO Contact Center at 800-786-9199, or it can be viewed on the USPTO website at http://www.uspto.gov/web/offices/pac/doc/general/index.html.

For information on preventing theft of your intellectual property (patents, trademarks and copyrights), you may wish to consult the U.S. Government website, http://www.stopfakes.gov. Part of a Department of Commerce initiative, this website includes self-help "toolkits" giving innovators guidance on how to protect intellectual property in specific

Microchip Ex. 1012, p. 57
Microchip v. Aptiv
IPR2024-00496

countries such as China, Korea and Mexico. For questions regarding patent enforcement issues, applicants may call the U.S. Government hotline at 1-866-999-HALT (1-866-999-4258).

LICENSE FOR FOREIGN FILING UNDER

Title 35, United States Code, Section 184

Title 37, Code of Federal Regulations, 5.11 & 5.15

GRANTED

The applicant has been granted a license under 35 U.S.C. 184, if the phrase "IF REQUIRED, FOREIGN FILING LICENSE GRANTED" followed by a date appears on this form. Such licenses are issued in all applications where the conditions for issuance of a license have been met, regardless of whether or not a license may be required as set forth in 37 CFR 5.15. The scope and limitations of this license are set forth in 37 CFR 5.15(a) unless an earlier license has been issued under 37 CFR 5.15(b). The license is subject to revocation upon written notification. The date indicated is the effective date of the license, unless an earlier license of similar scope has been granted under 37 CFR 5.13 or 5.14.

This license is to be retained by the licensee and may be used at any time on or after the effective date thereof unless it is revoked. This license is automatically transferred to any related applications(s) filed under 37 CFR 1.53(d). This license is not retroactive.

The grant of a license does not in any way lessen the responsibility of a licensee for the security of the subject matter as imposed by any Government contract or the provisions of existing laws relating to espionage and the national security or the export of technical data. Licensees should apprise themselves of current regulations especially with respect to certain countries, of other agencies, particularly the Office of Defense Trade Controls, Department of State (with respect to Arms, Munitions and Implements of War (22 CFR 121-128)); the Bureau of Industry and Security, Department of Commerce (15 CFR parts 730-774); the Office of Foreign AssetsControl, Department of Treasury (31 CFR Parts 500+) and the Department of Energy.

NOT GRANTED

No license under 35 U.S.C. 184 has been granted at this time, if the phrase "IF REQUIRED, FOREIGN FILING LICENSE GRANTED" DOES NOT appear on this form. Applicant may still petition for a license under 37 CFR 5.12, if a license is desired before the expiration of 6 months from the filing date of the application. If 6 months has lapsed from the filing date of this application and the licensee has not received any indication of a secrecy order under 35 U.S.C. 181, the licensee may foreign file the application pursuant to 37 CFR 5.15(b).

SelectUSA

The United States represents the largest, most dynamic marketplace in the world and is an unparalleled location for business investment, innovation, and commercialization of new technologies. The U.S. offers tremendous resources and advantages for those who invest and manufacture goods here. Through SelectUSA, our nation works to promote and facilitate business investment. SelectUSA provides information assistance to the international investor community; serves as an ombudsman for existing and potential investors; advocates on behalf of U.S. cities, states, and regions competing for global investment; and counsels U.S. economic development organizations on investment attraction best practices. To learn more about why the United States is the best country in the world to develop

Microchip Ex. 1012, p. 58
Microchip v. Aptiv
IPR2024-00496

technology, manufacture products, deliver services, and grow your business, visit http://www.SelectUSA.gov or call +1-202-482-6800.

Microchip Ex. 1012, p. 59
Microchip v. Aptiv
IPR2024-00496

PATENT APPLICATION FEE DETERMINATION RECORD Substitute for Form PTO-875	Application or Docket Number 17/498,045

APPLICATION AS FILED - PART I

FOR	(Column 1) NUMBER FILED	(Column 2) NUMBER EXTRA	SMALL ENTITY RATE($)	SMALL ENTITY FEE($)	OR	OTHER THAN SMALL ENTITY RATE($)	OTHER THAN SMALL ENTITY FEE($)
BASIC FEE (37 CFR 1.16(a), (b), or (c))	N/A	N/A	N/A			N/A	320
SEARCH FEE (37 CFR 1.16(k), (i), or (m))	N/A	N/A	N/A			N/A	700
EXAMINATION FEE (37 CFR 1.16(o), (p), or (q))	N/A	N/A	N/A			N/A	800
TOTAL CLAIMS (37 CFR 1.16(i))	15 minus 20 =	*			OR	x 100 =	0.00
INDEPENDENT CLAIMS (37 CFR 1.16(h))	3 minus 3 =	*				x 480 =	0.00
APPLICATION SIZE FEE (37 CFR 1.16(s))	If the specification and drawings exceed 100 sheets of paper, the application size fee due is $310 ($155 for small entity) for each additional 50 sheets or fraction thereof. See 35 U.S.C. 41(a)(1)(G) and 37 CFR 1.16(s).						0.00
MULTIPLE DEPENDENT CLAIM PRESENT (37 CFR 1.16(j))							0.00
* If the difference in column 1 is less than zero, enter "0" in column 2.			TOTAL			TOTAL	1820

APPLICATION AS AMENDED - PART II

		(Column 1) CLAIMS REMAINING AFTER AMENDMENT		(Column 2) HIGHEST NUMBER PREVIOUSLY PAID FOR	(Column 3) PRESENT EXTRA	SMALL ENTITY RATE($)	SMALL ENTITY ADDITIONAL FEE($)	OR	OTHER THAN SMALL ENTITY RATE($)	OTHER THAN SMALL ENTITY ADDITIONAL FEE($)
AMENDMENT A	Total (37 CFR 1.16(i))	*	Minus	**	=	x =		OR	x =	
AMENDMENT A	Independent (37 CFR 1.16(h))	*	Minus	***	=	x =		OR	x =	
AMENDMENT A	Application Size Fee (37 CFR 1.16(s))									
AMENDMENT A	FIRST PRESENTATION OF MULTIPLE DEPENDENT CLAIM (37 CFR 1.16(j))							OR		
						TOTAL ADD'L FEE		OR	TOTAL ADD'L FEE	

		(Column 1) CLAIMS REMAINING AFTER AMENDMENT		(Column 2) HIGHEST NUMBER PREVIOUSLY PAID FOR	(Column 3) PRESENT EXTRA	RATE($)	ADDITIONAL FEE($)	OR	RATE($)	ADDITIONAL FEE($)
AMENDMENT B	Total (37 CFR 1.16(i))	*	Minus	**	=	x =		OR	x =	
AMENDMENT B	Independent (37 CFR 1.16(h))	*	Minus	***	=	x =		OR	x =	
AMENDMENT B	Application Size Fee (37 CFR 1.16(s))									
AMENDMENT B	FIRST PRESENTATION OF MULTIPLE DEPENDENT CLAIM (37 CFR 1.16(j))							OR		
						TOTAL ADD'L FEE		OR	TOTAL ADD'L FEE	

* If the entry in column 1 is less than the entry in column 2, write "0" in column 3.
** If the "Highest Number Previously Paid For" IN THIS SPACE is less than 20, enter "20".
*** If the "Highest Number Previously Paid For" IN THIS SPACE is less than 3, enter "3".
The "Highest Number Previously Paid For" (Total or Independent) is the highest found in the appropriate box in column 1.

UNITED STATES PATENT AND TRADEMARK OFFICE

UNITED STATES DEPARTMENT OF COMMERCE
United States Patent and Trademark Office
Address: COMMISSIONER FOR PATENTS
P.O. Box 1450
Alexandria, Virginia 22313-1450
www.uspto.gov

APPLICATION NUMBER	FILING OR 371(C) DATE	FIRST NAMED APPLICANT	ATTY. DOCKET NO./TITLE
17/498,045	10/11/2021	Robert M. Voto	7021.145US5

CONFIRMATION NO. 2854

171991
Billion & Armitage - Aptiv
7401 Metro Blvd.
Suite 425
Minneapolis, MN 55439

PUBLICATION NOTICE

OC000000131412427

Title:FLEXIBLE MOBILE DEVICE CONNECTIVITY TO AUTOMOTIVE SYSTEMS WITH USB HUBS

Publication No.US-2022-0027301-A1
Publication Date:01/27/2022

NOTICE OF PUBLICATION OF APPLICATION

The above-identified application will be electronically published as a patent application publication pursuant to 37 CFR 1.211, et seq. The patent application publication number and publication date are set forth above.

The publication may be accessed through the USPTO's publically available Searchable Databases via the Internet at www.uspto.gov. The direct link to access the publication is currently http://www.uspto.gov/patft/.

The publication process established by the Office does not provide for mailing a copy of the publication to applicant. A copy of the publication may be obtained from the Office upon payment of the appropriate fee set forth in 37 CFR 1.19(a)(1). Orders for copies of patent application publications are handled by the USPTO's Public Records Division. The Public Records Division can be reached by telephone at (571) 272-3150 or (800) 972-6382, by facsimile at (571) 273-3250, by mail addressed to the United States Patent and Trademark Office, Public Records Division, Alexandria, VA 22313-1450 or via the Internet.

In addition, information on the status of the application, including the mailing date of Office actions and the dates of receipt of correspondence filed in the Office, may also be accessed via the Internet through the Patent Electronic Business Center at www.uspto.gov using the public side of the Patent Application Information and Retrieval (PAIR) system. The direct link to access this status information is currently https://portal.uspto.gov/pair/PublicPair. Prior to publication, such status information is confidential and may only be obtained by applicant using the private side of PAIR.

Further assistance in electronically accessing the publication, or about PAIR, is available by calling the Patent Electronic Business Center at 1-866-217-9197.

Office of Data Managment, Application Assistance Unit (571) 272-4000, or (571) 272-4200, or 1-888-786-0101

Microchip Ex. 1012, p. 61
Microchip v. Aptiv
IPR2024-00496

UNITED STATES PATENT AND TRADEMARK OFFICE

UNITED STATES DEPARTMENT OF COMMERCE
United States Patent and Trademark Office
Address: COMMISSIONER FOR PATENTS
P.O. Box 1450
Alexandria, Virginia 22313-1450
www.uspto.gov

APPLICATION NO.	FILING DATE	FIRST NAMED INVENTOR	ATTORNEY DOCKET NO.	CONFIRMATION NO.
17/498,045	10/11/2021	Robert M. Voto	7021.145US5	2854

171991 7590 09/15/2022
Billion & Armitage - Aptiv
7401 Metro Blvd.
Suite 425
Minneapolis, MN 55439

EXAMINER
UNELUS, ERNEST

ART UNIT	PAPER NUMBER
2181	

NOTIFICATION DATE	DELIVERY MODE
09/15/2022	ELECTRONIC

Please find below and/or attached an Office communication concerning this application or proceeding.

The time period for reply, if any, is set in the attached communication.

Notice of the Office communication was sent electronically on above-indicated "Notification Date" to the following e-mail address(es):

docketing@billionarmitage.com

PTOL-90A (Rev. 04/07)

Office Action Summary	Application No. 17/498,045	Applicant(s) Voto et al.	
	Examiner ERNEST UNELUS	Art Unit 2181	AIA (FITF) Status Yes

-- The MAILING DATE of this communication appears on the cover sheet with the correspondence address --

Period for Reply

A SHORTENED STATUTORY PERIOD FOR REPLY IS SET TO EXPIRE 3 MONTHS FROM THE MAILING DATE OF THIS COMMUNICATION.

- Extensions of time may be available under the provisions of 37 CFR 1.136(a). In no event, however, may a reply be timely filed after SIX (6) MONTHS from the mailing date of this communication.
- If NO period for reply is specified above, the maximum statutory period will apply and will expire SIX (6) MONTHS from the mailing date of this communication.
- Failure to reply within the set or extended period for reply will, by statute, cause the application to become ABANDONED (35 U.S.C. § 133). Any reply received by the Office later than three months after the mailing date of this communication, even if timely filed, may reduce any earned patent term adjustment. See 37 CFR 1.704(b).

Status

1)☑ Responsive to communication(s) filed on 10/11/2021.

☐ A declaration(s)/affidavit(s) under **37 CFR 1.130(b)** was/were filed on _____.

2a)☐ This action is **FINAL.** 2b) ☑ This action is non-final.

3)☐ An election was made by the applicant in response to a restriction requirement set forth during the interview on _____; the restriction requirement and election have been incorporated into this action.

4)☐ Since this application is in condition for allowance except for formal matters, prosecution as to the merits is closed in accordance with the practice under *Ex parte Quayle*, 1935 C.D. 11, 453 O.G. 213.

Disposition of Claims*

5) ☑ Claim(s) 1-15 is/are pending in the application.

5a) Of the above claim(s) _____ is/are withdrawn from consideration.

6) ☐ Claim(s) _____ is/are allowed.

7) ☑ Claim(s) 1-15 is/are rejected.

8) ☐ Claim(s) _____ is/are objected to.

9) ☐ Claim(s) _____ are subject to restriction and/or election requirement

* If any claims have been determined allowable, you may be eligible to benefit from the **Patent Prosecution Highway** program at a participating intellectual property office for the corresponding application. For more information, please see http://www.uspto.gov/patents/init_events/pph/index.jsp or send an inquiry to **PPHfeedback@uspto.gov.**

Application Papers

10)☐ The specification is objected to by the Examiner.

11)☑ The drawing(s) filed on 10/11/2021 is/are: a)☑ accepted or b)☐ objected to by the Examiner.

Applicant may not request that any objection to the drawing(s) be held in abeyance. See 37 CFR 1.85(a).

Replacement drawing sheet(s) including the correction is required if the drawing(s) is objected to. See 37 CFR 1.121(d).

Priority under 35 U.S.C. § 119

12)☐ Acknowledgment is made of a claim for foreign priority under 35 U.S.C. § 119(a)-(d) or (f).

Certified copies:

a)☐ All b)☐ Some** c)☐ None of the:

1.☐ Certified copies of the priority documents have been received.

2.☐ Certified copies of the priority documents have been received in Application No. _____.

3.☐ Copies of the certified copies of the priority documents have been received in this National Stage application from the International Bureau (PCT Rule 17.2(a)).

** See the attached detailed Office action for a list of the certified copies not received.

Attachment(s)

1) ☑ Notice of References Cited (PTO-892)

2) ☑ Information Disclosure Statement(s) (PTO/SB/08a and/or PTO/SB/08b) Paper No(s)/Mail Date 10/11/2021.

3) ☐ Interview Summary (PTO-413) Paper No(s)/Mail Date _____.

4) ☐ Other: _____.

Microchip Ex. 1012, p. 63
Microchip v. Aptiv
IPR2024-00496

DETAILED ACTION

The present application, filed on or after March 16, 2013, is being examined under the first inventor to file provisions of the AIA.

The instant application having Application No. 17/498,045 has a total of 15 elected claims pending in the application; there are 3 independent claims and 12 dependent claims, which are ready for examination by the examiner.

INFORMATION CONCERNING OATH/DECLARATION

Oath/Declaration

The applicant's oath/declaration has been reviewed by the examiner and is found to conform to the requirements prescribed in **37 C.F.R. 1.63.**

INFORMATION CONCERNING DRAWINGS

Drawings

The applicant's drawings submitted are acceptable for examination purposes.

ACKNOWLEDGEMENT OF REFERENCES CITED BY APPLICANT

As required by **M.P.E.P. 609(C)**, the applicant's submissions of the Information Disclosure Statement 10/11/2021 is acknowledged by the examiner and the cited reference has been considered in the examination of the claims now pending. As required by **M.P.E.P 609 C(2)**, a copy of the PTOL-1449 initialed and dated by the examiner is attached to the instant office action.

REJECTIONS BASED ON PRIOR ART

Double Patenting

The nonstatutory double patenting rejection is based on a judicially created doctrine grounded in public policy (a policy reflected in the statute) so as to prevent the unjustified or improper timewise extension of the "right to exclude" granted by a patent and to prevent possible harassment by multiple assignees. A nonstatutory double patenting rejection is appropriate where the conflicting claims are not identical, but at least one examined application claim is not patentably distinct from the reference claim(s) because the examined application claim is either anticipated by, or would have been obvious over, the reference claim(s). See, e.g., *In re Berg*, 140 F.3d 1428, 46 USPQ2d 1226 (Fed. Cir. 1998); *In re Goodman*, 11 F.3d 1046, 29 USPQ2d 2010 (Fed. Cir. 1993); *In re Longi*, 759 F.2d 887, 225 USPQ 645 (Fed. Cir. 1985); *In re Van Ornum*, 686 F.2d 937, 214 USPQ 761 (CCPA 1982); *In re Vogel*, 422 F.2d 438, 164 USPQ 619 (CCPA 1970); *In re Thorington*, 418 F.2d 528, 163 USPQ 644 (CCPA 1969).

A timely filed terminal disclaimer in compliance with 37 CFR 1.321(c) or 1.321(d) may be used to overcome an actual or provisional rejection based on nonstatutory double patenting provided the reference application or patent either is shown to be commonly owned with the examined application, or claims an invention made as a result of activities undertaken within the scope of a joint research agreement. See MPEP § 717.02 for applications subject to examination under the first inventor to file provisions of the AIA as explained in MPEP § 2159. See MPEP §§ 706.02(l)(1) - 706.02(l)(3) for applications not subject to examination under the first inventor to file provisions of the AIA. A terminal disclaimer must be signed in compliance with 37 CFR 1.321(b).

The USPTO Internet website contains terminal disclaimer forms which may be used. Please visit www.uspto.gov/patent/patents-forms. The filing date of the application in which the form is filed determines what form (e.g., PTO/SB/25, PTO/SB/26, PTO/AIA/25, or PTO/AIA/26) should be used. A web-based eTerminal Disclaimer may be filled out completely online using web-screens. An eTerminal Disclaimer that meets all requirements is auto-processed and approved immediately upon submission. For more information about eTerminal Disclaimers, refer to www.uspto.gov/patents/process/file/efs/guidance/eTD-info-I.jsp.

Claims 1-15 are rejected on the ground of nonstatutory double patenting as being unpatentable over claims 1-17 of U.S. Patent No. 9,460,037; claims 1-20 of U.S. Patent No. 9,619,420, claims 1-6 of U.S. Patent No. 10,545,899 and claim 1 of U.S. Patent No. 11,176,072. Although the claims at issue are not identical, they are not patentably distinct from each other because the claims mentioned and claims 1-11 of present application are directed to a hub to dynamically switch/route a USB device connection between USB Device mode and USB Host mode and a host simultaneously accessing multiple USB devices.

Claim Rejections - 35 USC § 102

In the event the determination of the status of the application as subject to AIA 35 U.S.C. 102 and 103 (or as subject to pre-AIA 35 U.S.C. 102 and 103) is incorrect, any correction of the statutory basis for the rejection will not be considered a new ground of rejection if the prior art relied upon, and the rationale supporting the rejection, would be the same under either status.

The following is a quotation of the appropriate paragraphs of 35 U.S.C. 102 that form the basis for the rejections under this section made in this Office action:

A person shall be entitled to a patent unless –

(a)(1) the claimed invention was patented, described in a printed publication, or in public use, on sale or otherwise available to the public before the effective filing date of the claimed invention.

1. **Claims 1-15** are rejected under 35 U.S.C. 102(a)(1) as being anticipated by Wright (US pat. 7,502,878), hereinafter, "Wright".

At the outset, Applicant is reminded that claims subject to examination will be given their broadest reasonable interpretation in light of the supporting disclosure. In re Morris, 127 F.3d 1048, 1054-55, 44 USPQ2d 1023,1027-28 (Fed. Cir. 1997). With this in mind, the discussion will focus on how the terms and relationships between the terms in the claims are met by the references.

2. As per **claims 1, 5, 6, 10, 11 and 12**, Wright discloses a method, comprising: providing a first USB port **(receptacle 40A of figs. 4 and 5)** for communication with a USB host **(USB host 31A; see figs. 2, 4 and 5 and col. 5, line 42 to col. 6, line 21 and col. 6, lines 54-59)**; providing a second USB port **(receptacle 40B)** for communicating with a consumer USB device **(an A type USB device/host 42/31B; see col. 5, line 66 to col. 6, line 9 and figs. 4 and 5)**; providing a signal detection circuit **(hub logic 38 combined with mux 72B of fig. 5; see col. 5, lines 62-65 and col. 6, line 52)** for receiving USB signals from the consumer USB device via the second USB port **(see col. 5, lines 62-65 and col. 6, line 52)**; routing the USB signals emanating from the consumer USB device to the first USB port via a USB bridge **(connection between mux 72B and mux 36, of fig. 5, shown as connection 74 of fig. 4)** and a USB hub **(mux 36)** in accordance with a determination by the signal detection circuit that the consumer device is operating in a USB host mode **(to be a B type USB host device, when USB host 31 is a host, connected to an upstream port/receptacle 40, as shown in fig. 5) (see fig. 5, which shows routing through the connection mentioned right above and col. 5, line 42 to col. 6, line 21**

and col. 6, lines 54-59); and routing the USB signals emanating from (**see fig. 4 and col. 5, lines 40-41, which disclose "*the muxes 36 and 72 are all bi-directional multiplexers*"**) the consumer USB device to the first USB port via the USB hub and bypassing the USB bridge in accordance with a determination by the signal detection circuit that the consumer device is operating in a USB device mode (**see fig. 4, which shows bypassing of connection 74 when USB device 42 is connection to a downstream port/receptacle 40**).

3. As per **claims 2, 7 and 13**, Wright discloses "The method according to claim 1" **[See rejection to claim 1 above]**, wherein the USB host is embedded in an infotainment system (**see col. 4, lines 38-41**).

4. As per **claims 3, 8 and 14**, Wright discloses wherein the bypassing the USB bridge is performed by a USB routing switch (**the combination of hub logic 38, mux 72B and transceiver 34B, as shown in fig. 4; see col. 5, lines 62-65 and col. 6, line 52**).

5. As per **claims 4 and 9**, Wright discloses wherein the USB routing switch includes the signal detection circuit (**see above and fig. 4 or 5**).

6. As per **claim 15**, Wright discloses wherein the USB routing switch determines whether the second USB signal emanates from a USB device (**see col. 5, lines 62-65 and col. 6, line 52**).

RELEVANT ART CITED BY THE EXAMINER

The following prior art made of record and not relied upon is cited to establish the level of skill in the applicant's art and those arts considered reasonably pertinent to applicant's disclosure. See **MPEP 707.05(c)**.

The following reference teaches a method to enable a USB Host system to connect to multiple devices through a USB Hub having ports that can be changed from downstream to upstream, dual ports: US Pub. 2007/0255885 (Bohm et al.)

CLOSING COMMENTS

CONCLUSION

a. STATUS OF CLAIMS IN THE APPLICATION

The following is a summary of the treatment and status of all claims in the application as recommended by **M.P.E.P. 707.07(i):**

a (1) CLAIMS REJECTED IN THE APPLICATION

Per the instant office action, claims 1-15 have received a first action on the merits and are subject of a first action non-final.

b. DIRECTION OF FUTURE CORRESPONDENCES

Any inquiry concerning this communication or earlier communications from the Examiner should be directed to Ernest Unelus whose telephone number is (571) 272-8596. The examiner can normally be reached on Monday to Friday 9:00 AM to 5:00PM.

IMPORTANT NOTE

If attempts to reach the above noted Examiner by telephone are unsuccessful, the Examiner's supervisor, Mr. Idriss Alrobaye, can be reached at the following telephone number: Area Code (571) 270-1023.

The fax phone number for the organization where this application or proceeding is assigned is 571-273-8300. Information regarding the status of an application may be obtained from the Patent Application Information Retrieval (PAIR) system. Status information for published applications may be obtained from either Private PAIR or Public PAIR. Status information for unpublished applications is available through private PAIR only. For more information about the PMR system, see her//pair-direct.uspto.gov. Should you have questions on access to the Private PAIR system, contact the Electronic Business Center (EBC) at 866-217- 91 97 (toll-free).

/Ernest Unelus/
Primary Examiner
Art Unit 2181

Notice of References Cited	Application/Control No. 17/498,045	Applicant(s)/Patent Under Reexamination Voto et al.	
	Examiner ERNEST UNELUS	Art Unit 2181	Page 1 of 1

U.S. PATENT DOCUMENTS

*		Document Number Country Code-Number-Kind Code	Date MM-YYYY	Name	CPC Classification	US Classification
*	A	US-7502878-B1	03-2009	Wright; David G.	G06F13/4022	710/37
*	B	US-20070255885-A1	11-2007	Bohm; Mark R.	G06F13/4022	710/316
	C					
	D					
	E					
	F					
	G					
	H					
	I					
	J					
	K					
	L					
	M					

FOREIGN PATENT DOCUMENTS

*		Document Number Country Code-Number-Kind Code	Date MM-YYYY	Country	Name	CPC Classification
	N					
	O					
	P					
	Q					
	R					
	S					
	T					

NON-PATENT DOCUMENTS

*		Include as applicable: Author, Title Date, Publisher, Edition or Volume, Pertinent Pages)
	U	
	V	
	W	
	X	

*A copy of this reference is not being furnished with this Office action. (See MPEP § 707.05(a).)
Dates in MM-YYYY format are publication dates. Classifications may be US or foreign.

Microchip Ex. 1012, p. 71
Microchip v. Aptiv
IPR2024-00496

Index of Claims	Application/Control No.	Applicant(s)/Patent Under Reexamination
	17/498,045	Voto et al.
	Examiner	**Art Unit**
	ERNEST UNELUS	2181

✓	Rejected	-	Cancelled	N	Non-Elected	A	Appeal
=	Allowed	÷	Restricted	I	Interference	O	Objected

CLAIMS

☐ Claims renumbered in the same order as presented by applicant ☐ CPA ☐ T.D. ☐ R.1.47

CLAIM		DATE								
Final	Original	09/09/2022								
	1	✓								
	2	✓								
	3	✓								
	4	✓								
	5	✓								
	6	✓								
	7	✓								
	8	✓								
	9	✓								
	10	✓								
	11	✓								
	12	✓								
	13	✓								
	14	✓								
	15	✓								

Microchip Ex. 1012, p. 72
Microchip v. Aptiv
IPR2024-00496

Search Notes	Application/Control No.	Applicant(s)/Patent Under Reexamination
	17/498,045	Voto et al.
	Examiner	**Art Unit**
	ERNEST UNELUS	2181

CPC - Searched*		
Symbol	**Date**	**Examiner**
G06F 13/4022, 385, 4045, 4282; G06F 2213/4004, 3812 and G06F 11/3051	09/09/2022	E.U.

CPC Combination Sets - Searched*		
Symbol	**Date**	**Examiner**
	09/09/2022	E.U.

US Classification - Searched*			
Class	**Subclass**	**Date**	**Examiner**

* See search history printout included with this form or the SEARCH NOTES box below to determine the scope of the search.

Search Notes		
Search Notes	**Date**	**Examiner**
PE2E SEARCH: US-PGPUB; USPAT; USOCR; EPO; JPO	09/09/2022	E.U.
Inventor search utilizing PE2E SEARCH and DAV	09/09/2022	E.U.
Limited text search of G06F 13/4022, 385, 4045, 4282; G06F 2213/4004, 3812 and G06F 11/3051	09/09/2022	E.U.

Interference Search			
US Class/CPC Symbol	**US Subclass/CPC Group**	**Date**	**Examiner**

/ERNEST UNELUS/ Primary Examiner, Art Unit 2181	

Microchip Ex. 1012, p. 73
Microchip v. Aptiv
IPR2024-00496

PE2E SEARCH - Search History (Prior Art)

Ref #	Hits	Search Query	DBs	Default Operator	Plurals	British Equivalents	Time Stamp
L1	1	"11176072".pn.	(US-PGPUB; USPAT; USOCR)	OR	ON	ON	2022/09/09 04:37 PM
L2	1316	usb WITH (downstream OR upstream) WITH (port OR plug OR interface) WITH hub	(US-PGPUB; USPAT; USOCR)	OR	ON	ON	2022/09/09 04:53 PM
L3	184	mode WITH usb WITH (downstream OR upstream OR switch$3 OR mux OR multiplex$3) WITH (port OR plug OR interface) WITH hub	(US-PGPUB; USPAT; USOCR)	OR	ON	ON	2022/09/09 04:54 PM
L4	94	G06F13/385,4022,4045,387.cpc. AND mode WITH usb WITH (downstream OR upstream OR switch$3 OR mux OR multiplex$3) WITH (port OR plug OR interface) WITH hub	(US-PGPUB; USPAT; USOCR)	OR	ON	ON	2022/09/09 04:54 PM
L5	76	G06F13/385,4022,4045,387.cpc. AND mode WITH usb WITH (downstream OR upstream OR switch$3 OR mux OR multiplex$3) WITH (port OR plug OR interface) WITH hub AND hub WITH (switch$3 OR mux OR multiplex$3) WITH mode	(US-PGPUB; USPAT; USOCR)	OR	ON	ON	2022/09/09 04:54 PM
L6	71	G06F13/385,4022,4045,387.cpc. AND mode WITH usb WITH (downstream OR upstream OR switch$3 OR mux OR multiplex$3) WITH (port OR plug OR interface) WITH hub AND hub WITH (switch$3 OR mux OR multiplex$3) WITH mode WITH usb	(US-PGPUB; USPAT; USOCR)	OR	ON	ON	2022/09/09 04:55 PM
L7	1813160	Shyambabu Yeda.in. OR Robert Voto.in. OR Craig Petku.in.	(US-PGPUB; USPAT; USOCR)	OR	ON	ON	2022/09/09 04:55 PM
L8	17	7 AND usb WITH (downstream OR	(US-PGPUB; USPAT; USOCR)	OR	ON	ON	2022/09/09 04:55 PM

Microchip Ex. 1012, p. 74
Microchip v. Aptiv
IPR2024-00496

		upstream OR plurality OR multiple OR second OR another) WITH (port OR plug interface) WITH (hub OR adapt$3) AND bypass$4 WITH (host OR master OR initiat$3 OR slave) WITH (peripheral OR device OR port OR plug interface)					
L9	7551	G06F13/4022.cpc.	(US-PGPUB; USPAT; USOCR)	OR	ON	ON	2022/09/09 04:55 PM
L10	9216	G06F13/385.cpc.	(US-PGPUB; USPAT; USOCR)	OR	ON	ON	2022/09/09 04:56 PM
L11	26	G06F2213/4004,3812.cpc. AND mode WITH usb WITH (downstream OR upstream OR switch$3 OR mux OR multiplex$3) WITH (port OR plug OR interface) WITH hub AND hub WITH (switch$3 OR mux OR multiplex$3) WITH mode	(US-PGPUB; USPAT; USOCR)	OR	ON	ON	2022/09/09 04:56 PM
L12	2686	G06F11/3051.cpc.	(US-PGPUB; USPAT; USOCR)	OR	ON	ON	2022/09/09 04:56 PM

PE2E SEARCH - Search History (Interference)

There are no Interference searches to show.

Microchip Ex. 1012, p. 75
Microchip v. Aptiv
IPR2024-00496

PTO/SB/08a (01-10)
Approved for use through 07/31/2012. OMB 0651-0031
U.S. Patent and Trademark Office; U.S. DEPARTMENT OF COMMERCE
Under the Paperwork Reduction Act of 1995, no persons are required to respond to a collection of information unless it contains a valid OMB control number.

INFORMATION DISCLOSURE STATEMENT BY APPLICANT

(Not for submission under 37 CFR 1.99)

Application Number	17/498,045
Filing Date	
First Named Inventor	Voto
Art Unit	
Examiner Name	
Attorney Docket Number	7021.145US5

U.S.PATENTS Remove

Examiner Initial*	Cite No	Patent Number	Kind Code[1]	Issue Date	Name of Patentee or Applicant of cited Document	Pages,Columns,Lines where Relevant Passages or Relevant Figures Appear
	1	6073188	A	2000-06-06	FLEMING	
	2	6732219	B1	2004-05-04	BROYLES	
	3	6934793	B2	2005-08-23	YING, et al.	
	4	6957287	B2	2005-10-18	LOU, et al.	
	5	7130656	B2	2006-10-31	OKAGAKI, et al.	
	6	7280802	B2	2007-10-09	GRADY	
	7	7478191	B2	2009-01-13	WURZBURG, et al.	
	8	7502878	B1	2009-03-10	WRIGHT	

ALL REFERENCES CONSIDERED EXCEPT WHERE LINED THROUGH. /E.U/

INFORMATION DISCLOSURE STATEMENT BY APPLICANT (Not for submission under 37 CFR 1.99)	Application Number	17/498,045
	Filing Date	
	First Named Inventor	Voto
	Art Unit	
	Examiner Name	
	Attorney Docket Number	7021.145US5

	9	7523243	B2	2009-04-21	BOHM, et al.	
	10	7627708	B2	2009-12-01	BOHM, et al.	
	11	8447598	B2	2013-05-21	CHUTORASH, et al.	
	12	8447890	B1	2013-05-21	LETOURNEUR, et al.	

If you wish to add additional U.S. Patent citation information please click the Add button. Add

U.S.PATENT APPLICATION PUBLICATIONS Remove

Examiner Initial*	Cite No	Publication Number	Kind Code[1]	Publication Date	Name of Patentee or Applicant of cited Document	Pages,Columns,Lines where Relevant Passages or Relevant Figures Appear
	1	20030167345	A1	2003-09-04	KNIGHT, et al.	
	2	20040019732	A1	2004-01-29	OVERTOOM, et al.	
	3	20040088449	A1	2004-05-06	SAKAKI	
	4	20040243755	A1	2004-12-02	LEE, et al.	
	5	20060056401	A1	2006-03-16	BOHM, et al.	

ALL REFERENCES CONSIDERED EXCEPT WHERE LINED THROUGH. /E.U/

INFORMATION DISCLOSURE STATEMENT BY APPLICANT (Not for submission under 37 CFR 1.99)	Application Number	17/498,045
	Filing Date	
	First Named Inventor	Voto
	Art Unit	
	Examiner Name	
	Attorney Docket Number	7021.145US5

	6	20060206650	A1	2006-09-14	CHANG	
	7	20070067553	A1	2007-03-22	CHANG	
	8	20070086724	A1	2007-04-19	GRADY, et al.	
	9	20070156293	A1	2007-07-05	KELLZI, et al.	
	10	20070255885	A1	2007-11-01	BOHM, et al.	
	11	20080005262	A1	2008-01-03	WURZBURG, et al.	
	12	20090117890	A1	2009-05-07	JACOBSEN, et al.	
	13	20110054721	A1	2011-03-03	GOODRICH, et al.	
	14	20110124300	A1	2011-05-26	SINAI	
	15	20120134506	A1	2012-05-31	DEBIASIO, et al.	
	16	20120191811	A1	2012-07-26	NG, et al.	

ALL REFERENCES CONSIDERED EXCEPT WHERE LINED THROUGH. /E.U/

INFORMATION DISCLOSURE STATEMENT BY APPLICANT (Not for submission under 37 CFR 1.99)	Application Number	17/498,045
	Filing Date	
	First Named Inventor	Voto
	Art Unit	
	Examiner Name	
	Attorney Docket Number	7021.145US5

	17	20120290859	A1	2012-11-15	SALADIN, et al.	
	18	20130053003	A1	2013-02-28	KING	
	19	20130106750	A1	2013-05-02	KUROSAWA	
	20	20150089092	A1	2015-03-26	VOTO, et al.	

If you wish to add additional U.S. Published Application citation information please click the Add button. Add

FOREIGN PATENT DOCUMENTS Remove

Examiner Initial*	Cite No	Foreign Document Number[3]	Country Code[2] i	Kind Code[4]	Publication Date	Name of Patentee or Applicant of cited Document	Pages,Columns,Lines where Relevant Passages or Relevant Figures Appear	T[5]
	1	470887	TW	B	2002-01-01	Jang		
	2	2003256351	JP	A	2003-09-12	Furukawa		
	3	2007147114	WO	A2	2007-12-21	Wurzburg, et al.		
	4	2473123	GB	A	2011-03-02	Lydon, et al.		
	5	2015081448	WO	A1	2015-06-11	Condotta, et al.		

If you wish to add additional Foreign Patent Document citation information please click the Add button Add

ALL REFERENCES CONSIDERED EXCEPT WHERE LINED THROUGH. /E.U/

INFORMATION DISCLOSURE STATEMENT BY APPLICANT (Not for submission under 37 CFR 1.99)	Application Number	17/498,045
	Filing Date	
	First Named Inventor	Voto
	Art Unit	
	Examiner Name	
	Attorney Docket Number	7021.145US5

NON-PATENT LITERATURE DOCUMENTS			Remove
Examiner Initials*	Cite No	Include name of the author (in CAPITAL LETTERS), title of the article (when appropriate), title of the item (book, magazine, journal, serial, symposium, catalog, etc), date, pages(s), volume-issue number(s), publisher, city and/or country where published.	T5
	1	"APC USB 2.0 Host Controller- Device Driver Download", http:/lwww.liutilities.com/devicedriver/ ~pcusb20hostconlroller/, July 2002	
	2	"UNIVERSAL SERIAL BUS SPECIFICATION REVISION 2.0", UNIVERSAL SERIAL BUS SPECIFICATION" no. REV. J .0, 27 April 2000, 04/27/2000	
	3	"USB 2.0 Autoswitch User's Manual", Lindy Electronics Limited & Lindy-Elektronic GMBH, September 2002	
	4	OLSEN, et al., "FFI Rapport-A STUDY OF COMPUTER INTERFACES FOR SOLDIER SYSTEMS", Norwegian Defence Research Establishment, October 10, 2005, 10/10/2005	
	5	TYRE, "Peripheral-Sharing Hardware Suits Education's Needs to a 'T'", THE Journal {Technological Horizons In Education), October 1988	
	6	Examination Report for IN Application No. 201647014322, dated December 17, 2020, 5 pages	
	7	European Search Report for Application No. 18195496, European Patent Office, 2019-03-19	
	8	USB Implementers Forum ET AL: "USB Power 3 Delivery Specification REvision 3.0, Version 1.0a", 25 March 2016	

If you wish to add additional non-patent literature document citation information please click the Add button Add

EXAMINER SIGNATURE			
Examiner Signature	/ERNEST UNELUS/	Date Considered	09/09/2022

*EXAMINER: Initial if reference considered, whether or not citation is in conformance with MPEP 609. Draw line through a citation if not in conformance and not considered. Include copy of this form with next communication to applicant.

EFS Web 2.1.17

ALL REFERENCES CONSIDERED EXCEPT WHERE LINED THROUGH. /E.U/

INFORMATION DISCLOSURE STATEMENT BY APPLICANT (Not for submission under 37 CFR 1.99)	Application Number	17/498,045
	Filing Date	
	First Named Inventor	Voto
	Art Unit	
	Examiner Name	
	Attorney Docket Number	7021.145US5

[1] See Kind Codes of USPTO Patent Documents at www.USPTO.GOV or MPEP 901.04. [2] Enter office that issued the document, by the two-letter code (WIPO Standard ST.3). [3] For Japanese patent documents, the indication of the year of the reign of the Emperor must precede the serial number of the patent document. [4] Kind of document by the appropriate symbols as indicated on the document under WIPO Standard ST.16 if possible. [5] Applicant is to place a check mark here if English language translation is attached.

INFORMATION DISCLOSURE STATEMENT BY APPLICANT (Not for submission under 37 CFR 1.99)	Application Number	17/498,045
	Filing Date	
	First Named Inventor	Voto
	Art Unit	
	Examiner Name	
	Attorney Docket Number	7021.145US5

CERTIFICATION STATEMENT

Please see 37 CFR 1.97 and 1.98 to make the appropriate selection(s):

That each item of information contained in the information disclosure statement was first cited in any communication from a foreign patent office in a counterpart foreign application not more than three months prior to the filing of the information disclosure statement. See 37 CFR 1.97(e)(1).

OR

☐ That no item of information contained in the information disclosure statement was cited in a communication from a foreign patent office in a counterpart foreign application, and, to the knowledge of the person signing the certification after making reasonable inquiry, no item of information contained in the information disclosure statement was known to any individual designated in 37 CFR 1.56(c) more than three months prior to the filing of the information disclosure statement. See 37 CFR 1.97(e)(2).

See attached certification statement.

The fee set forth in 37 CFR 1.17 (p) has been submitted herewith.

☒ A certification statement is not submitted herewith.

SIGNATURE

A signature of the applicant or representative is required in accordance with CFR 1.33, 10.18. Please see CFR 1.4(d) for the form of the signature.

Signature	/Robert Myers/	Date (YYYY-MM-DD)	2021-10-11
Name/Print	Robert Myers	Registration Number	69783

This collection of information is required by 37 CFR 1.97 and 1.98. The information is required to obtain or retain a benefit by the public which is to file (and by the USPTO to process) an application. Confidentiality is governed by 35 U.S.C. 122 and 37 CFR 1.14. This collection is estimated to take 1 hour to complete, including gathering, preparing and submitting the completed application form to the USPTO. Time will vary depending upon the individual case. Any comments on the amount of time you require to complete this form and/or suggestions for reducing this burden, should be sent to the Chief Information Officer, U.S. Patent and Trademark Office, U.S. Department of Commerce, P.O. Box 1450, Alexandria, VA 22313-1450. DO NOT SEND FEES OR COMPLETED FORMS TO THIS ADDRESS. **SEND TO: Commissioner for Patents, P.O. Box 1450, Alexandria, VA 22313-1450.**

Privacy Act Statement

The Privacy Act of 1974 (P.L. 93-579) requires that you be given certain information in connection with your submission of the attached form related to a patent application or patent. Accordingly, pursuant to the requirements of the Act, please be advised that: (1) the general authority for the collection of this information is 35 U.S.C. 2(b)(2); (2) furnishing of the information solicited is voluntary; and (3) the principal purpose for which the information is used by the U.S. Patent and Trademark Office is to process and/or examine your submission related to a patent application or patent. If you do not furnish the requested information, the U.S. Patent and Trademark Office may not be able to process and/or examine your submission, which may result in termination of proceedings or abandonment of the application or expiration of the patent.

The information provided by you in this form will be subject to the following routine uses:

1. The information on this form will be treated confidentially to the extent allowed under the Freedom of Information Act (5 U.S.C. 552) and the Privacy Act (5 U.S.C. 552a). Records from this system of records may be disclosed to the Department of Justice to determine whether the Freedom of Information Act requires disclosure of these record s.

2. A record from this system of records may be disclosed, as a routine use, in the course of presenting evidence to a court, magistrate, or administrative tribunal, including disclosures to opposing counsel in the course of settlement negotiations.

3. A record in this system of records may be disclosed, as a routine use, to a Member of Congress submitting a request involving an individual, to whom the record pertains, when the individual has requested assistance from the Member with respect to the subject matter of the record.

4. A record in this system of records may be disclosed, as a routine use, to a contractor of the Agency having need for the information in order to perform a contract. Recipients of information shall be required to comply with the requirements of the Privacy Act of 1974, as amended, pursuant to 5 U.S.C. 552a(m).

5. A record related to an International Application filed under the Patent Cooperation Treaty in this system of records may be disclosed, as a routine use, to the International Bureau of the World Intellectual Property Organization, pursuant to the Patent Cooperation Treaty.

6. A record in this system of records may be disclosed, as a routine use, to another federal agency for purposes of National Security review (35 U.S.C. 181) and for review pursuant to the Atomic Energy Act (42 U.S.C. 218(c)).

7. A record from this system of records may be disclosed, as a routine use, to the Administrator, General Services, or his/her designee, during an inspection of records conducted by GSA as part of that agency's responsibility to recommend improvements in records management practices and programs, under authority of 44 U.S.C. 2904 and 2906. Such disclosure shall be made in accordance with the GSA regulations governing inspection of records for this purpose, and any other relevant (i.e., GSA or Commerce) directive. Such disclosure shall not be used to make determinations about individuals.

8. A record from this system of records may be disclosed, as a routine use, to the public after either publication of the application pursuant to 35 U.S.C. 122(b) or issuance of a patent pursuant to 35 U.S.C. 151. Further, a record may be disclosed, subject to the limitations of 37 CFR 1.14, as a routine use, to the public if the record was filed in an application which became abandoned or in which the proceedings were terminated and which application is referenced by either a published application, an application open to public inspections or an issued patent.

9. A record from this system of records may be disclosed, as a routine use, to a Federal, State, or local law enforcement agency, if the USPTO becomes aware of a violation or potential violation of law or regulation.

IN THE UNITED STATES PATENT AND TRADEMARK OFFICE

Inventor(s):	Robert M. Voto, et al.	Examiner:	Ernest Unelus
Application No.:	17/498,045	Group Art Unit:	2181
Filed:	October 11, 2021	Docket No.:	7021.145US5
		Confirmation No:	2854
Title:	FLEXIBLE MOBILE DEVICE CONNECTIVITY TO AUTOMOTIVE SYSTEMS WITH USB HUBS		

This paper is being filed electronically with the U.S. Patent Office

RESPONSE

Commissioner for Patents
P.O. Box 1450
Alexandria, VA 22313-1450

In connection with the above-identified application, the Non-Final Office Action mailed on September 15, 2022:

A **Listing of the Claims** begins on page 2 of this paper.

Remarks begin on page 5 of this paper.

Listing of the Claims:

1. (Original) A method, comprising:

providing a first USB port for communication with a USB host;

providing a second USB port for communicating with a consumer USB device;

providing a signal detection circuit for receiving USB signals from the consumer USB device via the second USB port;

routing the USB signals emanating from the consumer USB device to the first USB port via a USB bridge and a USB hub in accordance with a determination by the signal detection circuit that the consumer device is operating in a USB host mode; and

routing the USB signals emanating from the consumer USB device to the first USB port via the USB hub and bypassing the USB bridge in accordance with a determination by the signal detection circuit that the consumer device is operating in a USB device mode.

2. (Original) The method according to claim 1, wherein the USB host is embedded in an infotainment system.

3. (Original) The method according to claim 1, wherein the bypassing the USB bridge is performed by a USB routing switch.

4. (Original) The method according to claim 3, wherein the USB routing switch includes the signal detection circuit.

5. (Original) A USB communication management method for interconnecting sources of USB signals, the method comprising:

receiving first USB host signals from a first USB host;

receiving second USB signals from a second USB signal source;

determining, via a signal detection circuit, whether the second USB signals emanate from a second USB host;

routing the second USB signals emanating from the second USB host via a USB bridge and a USB hub to the first USB host; and

routing the second USB signals not determined to emanate from a USB host via a USB hub to the first USB host while bypassing the USB bridge.

6. (Original) The USB communication management method according to claim 5, further comprising:

determining whether the second USB signals emanate from a USB device; and

routing the second USB signals determined to emanate from the USB device via a USB hub to the first USB host.

7. (Original) The USB communication management method according to claim 5, wherein the first USB host is embedded in an infotainment system.

8. (Original) The method according to claim 5, wherein the routing of the second USB signals is performed by a USB routing switch.

9. (Original) The method according to claim 8, wherein the USB routing switch includes the signal detection circuit.

10. (Original) A USB communication management method for interconnecting sources of USB signals, the method comprising:

receiving a first USB host signal from a first USB host;

receiving a second USB signal from a second USB signal source;

determining whether the second USB signal emanates from a second USB host;

establishing a first communication path via a USB bridge and a USB hub between the first USB host and the second USB signal source in accordance with the second signal emanating from the second USB host; and

establishing a second communication path via a USB hub between the first USB host and the second USB signal source thereby bypassing the USB bridge in accordance with the second USB signal not to emanating from the second USB host.

11. (Original) The USB communication management method according to claim 10, further comprising:

    determining whether the second USB signal emanates from a USB device; and

    establishing the second communication path via a USB hub between the first USB host and the second USB signal source which bypasses the USB bridge in accordance with the second USB signal emanating from the USB device.

12. (Original) The method according to claim 10, wherein the second communication path does not include the USB bridge.

13. (Original) The USB communication management method according to claim 12, wherein the first USB host is embedded in an infotainment system.

14. (Original) The method according to claim 10, wherein the establishment of the second communication path is performed by a USB routing switch.

15. (Original) The method according to claim 14, wherein the USB routing switch determines whether the second USB signal emanates from a USB device.

REMARKS

The present amendment is responsive to the Non-Final Office Action of September 15, 2022. Claims 1-15 are pending.

Claim Rejections – 35 U.S.C. §102

Claims 1-15 were rejected under 35 U.S.C. 102(a)(l) as being anticipated by Wright (US 7,502,878 B1), hereinafter, "Wright".

MPEP § 2131 states that "'[a] claim is anticipated only if **each and every element** as set forth in the claim is found, either expressly or inherently described, in a single prior art reference.' *Verdegaal Bros. v. Union Oil Co. of California*, 814 F.2d 628, 631, 2 USPQ2d 1051, 1053 (Fed. Cir. 1987)" (emphasis added). "'The identical invention must be shown in **as complete detail** as is contained in the ... claim.' *Richardson v. Suzuki Motor Co.*, 868 F.2d 1226, 1236, 9 USPQ2d 1913, 1920 (Fed. Cir. 1989)" (emphasis added). Moreover, "[e]very element of the claimed invention must be literally present, **arranged as in the claim**." *Id.* (emphasis added).

Claim 1 is directed to a method having the steps of providing a first USB port for communication with a USB host, providing a second USB port for communicating with a consumer USB device, providing a signal detection circuit for receiving USB signals from the consumer USB device via the second USB port, routing the USB signals emanating from the consumer USB device to the first USB port via a USB bridge and a USB hub in accordance with a determination by the signal detection circuit that the consumer device is operating in a USB host mode, and routing the USB signals emanating from the consumer USB device to the first USB port via the USB hub and bypassing the USB bridge in accordance with a determination by the signal detection circuit that the consumer device is operating in a USB device mode. The Office Action points to the multiplexer 36 of Wright to show a USB hub.

MPEP §2111.01(III) states: "[T]he ordinary and customary meaning of a claim term is the meaning that the term would have to a person of ordinary skill in the art in question at the time of the invention, *i.e.*, as of the effective filing date of the patent application." *Phillips v. AWH Corp.,*415 F.3d 1303, 1313, 75 USPQ2d 1321, 1326 (Fed. Cir. 2005) *(en banc)*; *Sunrace Roots Enter. Co. v. SRAM Corp.,* 336 F.3d 1298, 1302, 67 USPQ2d 1438, 1441 (Fed. Cir. 2003); *Brookhill-Wilk 1, LLC v. Intuitive Surgical, Inc.,* 334 F.3d 1294, 1298 67 USPQ2d 1132, 1136

(Fed. Cir. 2003) ("In the absence of an express intent to impart a novel meaning to the claim terms, the words are presumed to take on the ordinary and customary meanings attributed to them by those of ordinary skill in the art.").

A person of ordinary skill in the art would recognize the ordinary and customary meaning of a multiplexer being a device that selects between multiple digital input signals on multiple inputs and forwards the digital selected signal to a single output. A person of ordinary skill in the art would also recognize the ordinary and customary meaning of a hub being a device that broadcasts a digital signal from one input to many devices connected to the outputs of the hub. A person of ordinary skill in the art would also instantly recognize that a multiplexer and a hub provide different functions within a computer system and are not equivalents of each other.

MPEP §2111.01(I) states: "Under a broadest reasonable interpretation (BRI), words of the claim must be given their plain meaning, unless such meaning is inconsistent with the specification. The plain meaning of a term means the ordinary and customary meaning given to the term by those of ordinary skill in the art at the time of the invention. The ordinary and customary meaning of a term may be evidenced by a variety of sources, including the words of the claims themselves, the specification, drawings, and prior art. However, the best source for determining the meaning of a claim term is the specification - the greatest clarity is obtained when the specification serves as a glossary for the claim terms. The words of the claim must be given their plain meaning unless the plain meaning is inconsistent with the specification. *In re Zletz,* 893 F.2d 319, 321, 13 USPQ2d 1320, 1322 (Fed. Cir. 1989) (discussed below); *Chef America, Inc. v. Lamb-Weston, Inc.,* 358 F.3d 1371, 1372, 69 USPQ2d 1857 (Fed. Cir. 2004)".

Applicant submits that there is nothing in the specification that would cause the term "USB hub" to be inconsistent with the ordinary and customary meaning or to meet the definition of a multiplexer.

Therefore, Applicant submits that the multiplexer 36 of Wright cannot be fairly characterized as a USB hub under the broadest reasonable interpretation. Further, a review of Wright finds that it refers to the element 70 as a hub. The multiplexer 36 is a component of the hub 70.

Since the multiplexer of Wright does not disclose a USB hub, Applicant submits that Wright fails to disclose each and every element arranged as in claim 1, particularly routing the

USB signals emanating from the consumer USB device to the first USB port via a USB bridge and a USB hub in accordance with a determination by the signal detection circuit that the consumer device is operating in a USB host mode and routing the USB signals emanating from the consumer USB device to the first USB port via the USB hub and bypassing the USB bridge in accordance with a determination by the signal detection circuit that the consumer device is operating in a USB device mode.

Therefore, Applicant submits that claim 1 is not anticipated and is allowable over Wright. Claims 2-4 are dependent on claim 1 and are allowable therewith.

Regarding the rejection of independent claims 5 and 10, the Office Action also replies upon the multiplexer 36 of Wright to show the claimed USB hub. Therefore, Applicant submits that claims 5 and 10 are allowable by applying, *mutatis mutandis*, the arguments presented for claim 1 above. Claims 6-9 are dependent on claim 5 and claims 11-15 are dependent on claim 10 and all of these claims are allowable therewith.

Accordingly, Applicant respectfully requests that the rejection of claims 1-15 under 35 U.S.C. §102(a)(1) be reconsidered and withdrawn and that these claims be allowed.

<u>Claim Rejections – Nonstatutory Double Patenting</u>

The Office has concluded that claims 1-15 are unpatentable over one or more claims in US Patent Nos. 9,460,037 (claims 1-17), 9,619,420 (claims 1-20), 10,545,899 (claims 1-6) and 11,176,072 (claim 1). Therefore, the Office has provisionally rejected these claims on the ground of nonstatutory obviousness-type double patenting.

Applicant acknowledges the rejection and its provisional nature as the pending claims are not under an indication of allowability. Applicant requests that this rejection be held in abeyance until such time as the claims are allowable. Once claims are found allowable, Applicant will address the nonstatutory obviousness-type double patenting rejections.

Applicant notes that there are other arguments that may be presented to overcome the objections and rejections made in this Office Action, but those additional arguments have not been presented here in the interest of brevity. Applicant reserves the right to present any of these additional arguments in a later filed response or brief.

CONCLUSION

Applicant respectfully submits that the claims are in condition for allowance, and notification to that effect is earnestly requested. Examiner is invited to telephone Applicant's agent at (952) 697.2641 to facilitate prosecution of this application.

Please charge any additional fees or credit any overpayment to Deposit Account No. 50-3141.

Respectfully submitted,

Billion & Armitage
7401 Metro Blvd., Suite 425
Minneapolis, MN 55439
(952) 697.2630 – main phone
(952) 697.2631 – facsimile

Dated: October 28, 2022

By /Robert J. Myers/
Robert J. Myers
Reg. No. 69,783

RJM/wis

Electronic Acknowledgement Receipt

EFS ID:	46917785
Application Number:	17498045
International Application Number:	
Confirmation Number:	2854
Title of Invention:	FLEXIBLE MOBILE DEVICE CONNECTIVITY TO AUTOMOTIVE SYSTEMS WITH USB HUBS
First Named Inventor/Applicant Name:	Robert M. Voto
Customer Number:	171991
Filer:	Robert James Myers/Rebecca Krueger
Filer Authorized By:	Robert James Myers
Attorney Docket Number:	7021.145US5
Receipt Date:	28-OCT-2022
Filing Date:	11-OCT-2021
Time Stamp:	15:41:53
Application Type:	Utility under 35 USC 111(a)

Payment information:

Submitted with Payment	no

File Listing:

Document Number	Document Description	File Name	File Size(Bytes)/ Message Digest	Multi Part /.zip	Pages (if appl.)
1		7021145US5_Response_to_Office_Action_mailed_20220915.pdf	145544 5fcdd55e54fa71e337771d5524674253bfb62573	yes	8

	Multipart Description/PDF files in .zip description		
	Document Description	**Start**	**End**
	Amendment/Request for Reconsideration-After Non-Final Rejection	1	1
	Claims	2	4
	Applicant Arguments/Remarks Made in an Amendment	5	8

Warnings:	
Information:	
Total Files Size (in bytes):	145544

This Acknowledgement Receipt evidences receipt on the noted date by the USPTO of the indicated documents, characterized by the applicant, and including page counts, where applicable. It serves as evidence of receipt similar to a Post Card, as described in MPEP 503.

New Applications Under 35 U.S.C. 111
If a new application is being filed and the application includes the necessary components for a filing date (see 37 CFR 1.53(b)-(d) and MPEP 506), a Filing Receipt (37 CFR 1.54) will be issued in due course and the date shown on this Acknowledgement Receipt will establish the filing date of the application.
National Stage of an International Application under 35 U.S.C. 371
If a timely submission to enter the national stage of an international application is compliant with the conditions of 35 U.S.C. 371 and other applicable requirements a Form PCT/DO/EO/903 indicating acceptance of the application as a national stage submission under 35 U.S.C. 371 will be issued in addition to the Filing Receipt, in due course.
New International Application Filed with the USPTO as a Receiving Office
If a new international application is being filed and the international application includes the necessary components for an international filing date (see PCT Article 11 and MPEP 1810), a Notification of the International Application Number and of the International Filing Date (Form PCT/RO/105) will be issued in due course, subject to prescriptions concerning national security, and the date shown on this Acknowledgement Receipt will establish the international filing date of the application.

Doc Code: DIST.E.FILE Document Description: Electronic Terminal Disclaimer - Filed	PTO/SB/26 U.S. Patent and Trademark Office Department of Commerce

Electronic Petition Request	**TERMINAL DISCLAIMER TO OBVIATE A DOUBLE PATENTING REJECTION OVER A "PRIOR" PATENT**
Application Number	17498045
Filing Date	11-Oct-2021
First Named Inventor	Robert Voto
Attorney Docket Number	7021.145US5
Title of Invention	FLEXIBLE MOBILE DEVICE CONNECTIVITY TO AUTOMOTIVE SYSTEMS WITH USB HUBS

☒ Filing of terminal disclaimer does not obviate requirement for response under 37 CFR 1.111 to outstanding Office Action

☒ This electronic Terminal Disclaimer is not being used for a Joint Research Agreement.

Owner	Percent Interest
APTIV TECHNOLOGIES LIMITED	100%

The owner(s) with percent interest listed above in the instant application hereby disclaims, except as provided below, the terminal part of the statutory term of any patent granted on the instant application which would extend beyond the expiration date of the full statutory term of prior patent number(s)

11176072

10545899

9619420

9460037

as the term of said prior patent is presently shortened by any terminal disclaimer. The owner hereby agrees that any patent so granted on the instant application shall be enforceable only for and during such period that it and the prior patent are commonly owned. This agreement runs with any patent granted on the instant application and is binding upon the grantee, its successors or assigns.

In making the above disclaimer, the owner does not disclaim the terminal part of the term of any patent granted on the instant application that would extend to the expiration date of the full statutory term of the prior patent, "as the term of said prior patent is presently shortened by any terminal disclaimer," in the event that said prior patent later:
- expires for failure to pay a maintenance fee;
- is held unenforceable;
- is found invalid by a court of competent jurisdiction;
- is statutorily disclaimed in whole or terminally disclaimed under 37 CFR 1.321;
- has all claims canceled by a reexamination certificate;
- is reissued; or
- is in any manner terminated prior to the expiration of its full statutory term as presently shortened by any terminal disclaimer.

(●) Terminal disclaimer fee under 37 CFR 1.20(d) is included with Electronic Terminal Disclaimer request.

( ) I certify, in accordance with 37 CFR 1.4(d)(4), that the terminal disclaimer fee under 37 CFR 1.20(d) required for this terminal disclaimer has already been paid in the above-identified application.

Applicant claims the following fee status:

( ) Small Entity

( ) Micro Entity

(●) Regular Undiscounted

I hereby declare that all statements made herein of my own knowledge are true and that all statements made on information and belief are believed to be true; and further that these statements were made with the knowledge that willful false statements and the like so made are punishable by fine or imprisonment, or both, under Section 1001 of Title 18 of the United States Code and that such willful false statements may jeopardize the validity of the application or any patent issued thereon.

THIS PORTION MUST BE COMPLETED BY THE SIGNATORY OR SIGNATORIES

I certify, in accordance with 37 CFR 1.4(d)(4) that I am:

(●) An attorney or agent registered to practice before the Patent and Trademark Office who is of record in this application

Registration Number 69783

( ) A sole inventor

( ) A joint inventor; I certify that I am authorized to sign this submission on behalf of all of the inventors as evidenced by the power of attorney in the application

( ) A joint inventor; all of whom are signing this request

Signature	/Robert Myers/
Name	Robert Myers

*Statement under 37 CFR 3.73(b) is required if terminal disclaimer is signed by the assignee (owner).
Form PTO/SB/96 may be used for making this certification. See MPEP § 324.

Electronic Patent Application Fee Transmittal

Application Number:	17498045
Filing Date:	11-Oct-2021
Title of Invention:	FLEXIBLE MOBILE DEVICE CONNECTIVITY TO AUTOMOTIVE SYSTEMS WITH USB HUBS
First Named Inventor/Applicant Name:	Robert M. Voto
Filer:	Robert James Myers/Rebecca Krueger
Attorney Docket Number:	7021.145US5

Filed as Large Entity

Filing Fees for Utility under 35 USC 111(a)

Description	Fee Code	Quantity	Amount	Sub-Total in USD($)
Basic Filing:				
STATUTORY OR TERMINAL DISCLAIMER	1814	1	170	170
Pages:				
Claims:				
Miscellaneous-Filing:				
Petition:				
Patent-Appeals-and-Interference:				
Post-Allowance-and-Post-Issuance:				

Description	Fee Code	Quantity	Amount	Sub-Total in USD($)
Extension-of-Time:				
Miscellaneous:				
			Total in USD ($)	**170**

Doc Code: DISQ.E.FILE
Document Description: Electronic Terminal Disclaimer – Approved

Application No.: 17498045

Filing Date: 11-Oct-2021

Applicant/Patent under Reexamination: Voto

Electronic Terminal Disclaimer filed on December 16, 2022

☒ APPROVED

This patent is subject to a terminal disclaimer

☐ DISAPPROVED

Approved/Disapproved by: Electronic Terminal Disclaimer automatically approved by EFS-Web

U.S. Patent and Trademark Office

Electronic Acknowledgement Receipt

EFS ID:	47221455
Application Number:	17498045
International Application Number:	
Confirmation Number:	2854
Title of Invention:	FLEXIBLE MOBILE DEVICE CONNECTIVITY TO AUTOMOTIVE SYSTEMS WITH USB HUBS
First Named Inventor/Applicant Name:	Robert M. Voto
Customer Number:	171991
Filer:	Robert James Myers/Rebecca Krueger
Filer Authorized By:	Robert James Myers
Attorney Docket Number:	7021.145US5
Receipt Date:	16-DEC-2022
Filing Date:	11-OCT-2021
Time Stamp:	08:50:26
Application Type:	Utility under 35 USC 111(a)

Payment information:

Submitted with Payment	yes
Payment Type	CARD
Payment was successfully received in RAM	$170
RAM confirmation Number	E2022BF950153406
Deposit Account	503141
Authorized User	Rebecca Krueger
The Director of the USPTO is hereby authorized to charge indicated fees and credit any overpayment as follows: 37 CFR 1.21 (Miscellaneous fees and charges)	

File Listing:

Document Number	Document Description	File Name	File Size(Bytes)/ Message Digest	Multi Part /.zip	Pages (if appl.)
1	Terminal Disclaimer-Filed (Electronic)	eTerminal-Disclaimer.pdf	42678 72c55a52550c915e75a0ea1cfedcf398b7854e18	no	3
Warnings:					
Information:					
2	Fee Worksheet (SB06)	fee-info.pdf	38008 7a433f76c529173d7bc9cf0fd6adcb2595c3f6a1	no	2
Warnings:					
Information:					
			Total Files Size (in bytes):	80686	

This Acknowledgement Receipt evidences receipt on the noted date by the USPTO of the indicated documents, characterized by the applicant, and including page counts, where applicable. It serves as evidence of receipt similar to a Post Card, as described in MPEP 503.

<u>New Applications Under 35 U.S.C. 111</u>
If a new application is being filed and the application includes the necessary components for a filing date (see 37 CFR 1.53(b)-(d) and MPEP 506), a Filing Receipt (37 CFR 1.54) will be issued in due course and the date shown on this Acknowledgement Receipt will establish the filing date of the application.
<u>National Stage of an International Application under 35 U.S.C. 371</u>
If a timely submission to enter the national stage of an international application is compliant with the conditions of 35 U.S.C. 371 and other applicable requirements a Form PCT/DO/EO/903 indicating acceptance of the application as a national stage submission under 35 U.S.C. 371 will be issued in addition to the Filing Receipt, in due course.
<u>New International Application Filed with the USPTO as a Receiving Office</u>
If a new international application is being filed and the international application includes the necessary components for an international filing date (see PCT Article 11 and MPEP 1810), a Notification of the International Application Number and of the International Filing Date (Form PCT/RO/105) will be issued in due course, subject to prescriptions concerning national security, and the date shown on this Acknowledgement Receipt will establish the international filing date of the application.

UNITED STATES PATENT AND TRADEMARK OFFICE

UNITED STATES DEPARTMENT OF COMMERCE
United States Patent and Trademark Office
Address: COMMISSIONER FOR PATENTS
P.O. Box 1450
Alexandria, Virginia 22313-1450
www.uspto.gov

NOTICE OF ALLOWANCE AND FEE(S) DUE

171991 7590 01/10/2023
Billion & Armitage - Aptiv
7401 Metro Blvd.
Suite 425
Minneapolis, MN 55439

EXAMINER
UNELUS, ERNEST

ART UNIT	PAPER NUMBER
2181	

DATE MAILED: 01/10/2023

APPLICATION NO.	FILING DATE	FIRST NAMED INVENTOR	ATTORNEY DOCKET NO.	CONFIRMATION NO.
17/498,045	10/11/2021	Robert M. Voto	7021.145US5	2854

TITLE OF INVENTION: FLEXIBLE MOBILE DEVICE CONNECTIVITY TO AUTOMOTIVE SYSTEMS WITH USB HUBS

APPLN. TYPE	ENTITY STATUS	ISSUE FEE DUE	PUBLICATION FEE DUE	PREV. PAID ISSUE FEE	TOTAL FEE(S) DUE	DATE DUE
nonprovisional	UNDISCOUNTED	$1200	$0.00	$0.00	$1200	04/10/2023

THE APPLICATION IDENTIFIED ABOVE HAS BEEN EXAMINED AND IS ALLOWED FOR ISSUANCE AS A PATENT. PROSECUTION ON THE MERITS IS CLOSED. THIS NOTICE OF ALLOWANCE IS NOT A GRANT OF PATENT RIGHTS. THIS APPLICATION IS SUBJECT TO WITHDRAWAL FROM ISSUE AT THE INITIATIVE OF THE OFFICE OR UPON PETITION BY THE APPLICANT. SEE 37 CFR 1.313 AND MPEP 1308.

THE ISSUE FEE AND PUBLICATION FEE (IF REQUIRED) MUST BE PAID WITHIN THREE MONTHS FROM THE MAILING DATE OF THIS NOTICE OR THIS APPLICATION SHALL BE REGARDED AS ABANDONED. THIS STATUTORY PERIOD CANNOT BE EXTENDED. SEE 35 U.S.C. 151. THE ISSUE FEE DUE INDICATED ABOVE DOES NOT REFLECT A CREDIT FOR ANY PREVIOUSLY PAID ISSUE FEE IN THIS APPLICATION. IF AN ISSUE FEE HAS PREVIOUSLY BEEN PAID IN THIS APPLICATION (AS SHOWN ABOVE), THE RETURN OF PART B OF THIS FORM WILL BE CONSIDERED A REQUEST TO REAPPLY THE PREVIOUSLY PAID ISSUE FEE TOWARD THE ISSUE FEE NOW DUE.

HOW TO REPLY TO THIS NOTICE:

I. Review the ENTITY STATUS shown above. If the ENTITY STATUS is shown as SMALL or MICRO, verify whether entitlement to that entity status still applies.

If the ENTITY STATUS is the same as shown above, pay the TOTAL FEE(S) DUE shown above.

If the ENTITY STATUS is changed from that shown above, on PART B - FEE(S) TRANSMITTAL, complete section number 5 titled "Change in Entity Status (from status indicated above)".

For purposes of this notice, small entity fees are 40% the amount of undiscounted fees, and micro entity fees are 20% the amount of undiscounted fees.

II. PART B - FEE(S) TRANSMITTAL, or its equivalent, must be completed and returned to the United States Patent and Trademark Office (USPTO) with your ISSUE FEE and PUBLICATION FEE (if required). If you are charging the fee(s) to your deposit account, section "4b" of Part B - Fee(s) Transmittal should be completed. If an equivalent of Part B is filed, a request to reapply a previously paid issue fee must be clearly made, and delays in processing may occur due to the difficulty in recognizing the paper as an equivalent of Part B.

III. All communications regarding this application must give the application number. Please direct all communications prior to issuance to Mail Stop ISSUE FEE unless advised to the contrary.

IMPORTANT REMINDER: Maintenance fees are due in utility patents issuing on applications filed on or after Dec. 12, 1980. It is patentee's responsibility to ensure timely payment of maintenance fees when due. More information is available at www.uspto.gov/PatentMaintenanceFees.

PTOL-85 (Rev. 02/11)

Microchip Ex. 1012, p. 102
Microchip v. Aptiv
IPR2024-00496

PART B - FEE(S) TRANSMITTAL

Complete and send this form, together with applicable fee(s), by mail or fax, or via EFS-Web.

By mail, send to: Mail Stop ISSUE FEE
Commissioner for Patents
P.O. Box 1450
Alexandria, Virginia 22313-1450

By fax, send to: (571)-273-2885

INSTRUCTIONS: This form should be used for transmitting the ISSUE FEE and PUBLICATION FEE (if required). Blocks 1 through 5 should be completed where appropriate. All further correspondence including the Patent, advance orders and notification of maintenance fees will be mailed to the current correspondence address as indicated unless corrected below or directed otherwise in Block 1, by (a) specifying a new correspondence address; and/or (b) indicating a separate "FEE ADDRESS" for maintenance fee notifications.

CURRENT CORRESPONDENCE ADDRESS (Note: Use Block 1 for any change of address)

171991 7590 01/10/2023
Billion & Armitage - Aptiv
7401 Metro Blvd.
Suite 425
Minneapolis, MN 55439

Note: A certificate of mailing can only be used for domestic mailings of the Fee(s) Transmittal. This certificate cannot be used for any other accompanying papers. Each additional paper, such as an assignment or formal drawing, must have its own certificate of mailing or transmission.

Certificate of Mailing or Transmission

I hereby certify that this Fee(s) Transmittal is being deposited with the United States Postal Service with sufficient postage for first class mail in an envelope addressed to the Mail Stop ISSUE FEE address above, or being transmitted to the USPTO via EFS-Web or by facsimile to (571) 273-2885, on the date below.

(Typed or printed name)
(Signature)
(Date)

APPLICATION NO.	FILING DATE	FIRST NAMED INVENTOR	ATTORNEY DOCKET NO.	CONFIRMATION NO.
17/498,045	10/11/2021	Robert M. Voto	7021.145US5	2854

TITLE OF INVENTION: FLEXIBLE MOBILE DEVICE CONNECTIVITY TO AUTOMOTIVE SYSTEMS WITH USB HUBS

APPLN. TYPE	ENTITY STATUS	ISSUE FEE DUE	PUBLICATION FEE DUE	PREV. PAID ISSUE FEE	TOTAL FEE(S) DUE	DATE DUE
nonprovisional	UNDISCOUNTED	$1200	$0.00	$0.00	$1200	04/10/2023

EXAMINER	ART UNIT	CLASS-SUBCLASS
UNELUS, ERNEST	2181	710-313000

1. Change of correspondence address or indication of "Fee Address" (37 CFR 1.363).

❑ Change of correspondence address (or Change of Correspondence Address form PTO/AIA/122 or PTO/SB/122) attached.

❑ "Fee Address" indication (or "Fee Address" Indication form PTO/AIA/47 or PTO/SB/47; Rev 03-02 or more recent) attached. **Use of a Customer Number is required.**

2. For printing on the patent front page, list
(1) The names of up to 3 registered patent attorneys or agents OR, alternatively,
(2) The name of a single firm (having as a member a registered attorney or agent) and the names of up to 2 registered patent attorneys or agents. If no name is listed, no name will be printed.

1_____
2_____
3_____

3. ASSIGNEE NAME AND RESIDENCE DATA TO BE PRINTED ON THE PATENT (print or type)

PLEASE NOTE: Unless an assignee is identified below, no assignee data will appear on the patent. If an assignee is identified below, the document must have been previously recorded, or filed for recordation, as set forth in 37 CFR 3.11 and 37 CFR 3.81(a). Completion of this form is NOT a substitute for filing an assignment.

(A) NAME OF ASSIGNEE (B) RESIDENCE: (CITY and STATE OR COUNTRY)

Please check the appropriate assignee category or categories (will not be printed on the patent) : ❑ Individual ❑ Corporation or other private group entity ❑ Government

4a. Fees submitted: ❑Issue Fee ❑Publication Fee (if required) ❑Advance Order - # of Copies _____

4b. Method of Payment: *(Please first reapply any previously paid fee shown above)*

❑ Electronic Payment via EFS-Web ❑ Enclosed check ❑ Non-electronic payment by credit card (Attach form PTO-2038)

❑ The Director is hereby authorized to charge the required fee(s), any deficiency, or credit any overpayment to Deposit Account No. _____

5. **Change in Entity Status** (from status indicated above)

❑ Applicant certifying micro entity status. See 37 CFR 1.29

❑ Applicant asserting small entity status. See 37 CFR 1.27

❑ Applicant changing to regular undiscounted fee status.

NOTE: Absent a valid certification of Micro Entity Status (see forms PTO/SB/15A and 15B), issue fee payment in the micro entity amount will not be accepted at the risk of application abandonment.
NOTE: If the application was previously under micro entity status, checking this box will be taken to be a notification of loss of entitlement to micro entity status.
NOTE: Checking this box will be taken to be a notification of loss of entitlement to small or micro entity status, as applicable.

NOTE: This form must be signed in accordance with 37 CFR 1.31 and 1.33. See 37 CFR 1.4 for signature requirements and certifications.

Authorized Signature _____ Date _____

Typed or printed name _____ Registration No. _____

Microchip Ex. 1012, p. 103
Microchip v. Aptiv
IPR2024-00496

UNITED STATES PATENT AND TRADEMARK OFFICE

UNITED STATES DEPARTMENT OF COMMERCE
United States Patent and Trademark Office
Address: COMMISSIONER FOR PATENTS
P.O. Box 1450
Alexandria, Virginia 22313-1450
www.uspto.gov

APPLICATION NO.	FILING DATE	FIRST NAMED INVENTOR	ATTORNEY DOCKET NO.	CONFIRMATION NO.
17/498,045	10/11/2021	Robert M. Voto	7021.145US5	2854

171991 7590 01/10/2023
Billion & Armitage - Aptiv
7401 Metro Blvd.
Suite 425
Minneapolis, MN 55439

EXAMINER
UNELUS, ERNEST

ART UNIT	PAPER NUMBER
2181	

DATE MAILED: 01/10/2023

Determination of Patent Term Adjustment under 35 U.S.C. 154 (b)
(Applications filed on or after May 29, 2000)

The Office has discontinued providing a Patent Term Adjustment (PTA) calculation with the Notice of Allowance.

Section 1(h)(2) of the AIA Technical Corrections Act amended 35 U.S.C. 154(b)(3)(B)(i) to eliminate the requirement that the Office provide a patent term adjustment determination with the notice of allowance. See Revisions to Patent Term Adjustment, 78 Fed. Reg. 19416, 19417 (Apr. 1, 2013). Therefore, the Office is no longer providing an initial patent term adjustment determination with the notice of allowance. The Office will continue to provide a patent term adjustment determination with the Issue Notification Letter that is mailed to applicant approximately three weeks prior to the issue date of the patent, and will include the patent term adjustment on the patent. Any request for reconsideration of the patent term adjustment determination (or reinstatement of patent term adjustment) should follow the process outlined in 37 CFR 1.705.

Any questions regarding the Patent Term Extension or Adjustment determination should be directed to the Office of Patent Legal Administration at (571)-272-7702. Questions relating to issue and publication fee payments should be directed to the Customer Service Center of the Office of Patent Publication at 1-(888)-786-0101 or (571)-272-4200.

PTOL-85 (Rev. 02/11)

Microchip Ex. 1012, p. 104
Microchip v. Aptiv
IPR2024-00496

OMB Clearance and PRA Burden Statement for PTOL-85 Part B

The Paperwork Reduction Act (PRA) of 1995 requires Federal agencies to obtain Office of Management and Budget approval before requesting most types of information from the public. When OMB approves an agency request to collect information from the public, OMB (i) provides a valid OMB Control Number and expiration date for the agency to display on the instrument that will be used to collect the information and (ii) requires the agency to inform the public about the OMB Control Number's legal significance in accordance with 5 CFR 1320.5(b).

The information collected by PTOL-85 Part B is required by 37 CFR 1.311. The information is required to obtain or retain a benefit by the public which is to file (and by the USPTO to process) an application. Confidentiality is governed by 35 U.S.C. 122 and 37 CFR 1.14. This collection is estimated to take 30 minutes to complete, including gathering, preparing, and submitting the completed application form to the USPTO. Time will vary depending upon the individual case. Any comments on the amount of time you require to complete this form and/or suggestions for reducing this burden, should be sent to the Chief Information Officer, U.S. Patent and Trademark Office, U.S. Department of Commerce, P.O. Box 1450, Alexandria, Virginia 22313-1450. DO NOT SEND FEES OR COMPLETED FORMS TO THIS ADDRESS. SEND TO: Commissioner for Patents, P.O. Box 1450, Alexandria, Virginia 22313-1450. Under the Paperwork Reduction Act of 1995, no persons are required to respond to a collection of information unless it displays a valid OMB control number.

Privacy Act Statement

The Privacy Act of 1974 (P.L. 93-579) requires that you be given certain information in connection with your submission of the attached form related to a patent application or patent. Accordingly, pursuant to the requirements of the Act, please be advised that: (1) the general authority for the collection of this information is 35 U.S.C. 2(b)(2); (2) furnishing of the information solicited is voluntary; and (3) the principal purpose for which the information is used by the U.S. Patent and Trademark Office is to process and/or examine your submission related to a patent application or patent. If you do not furnish the requested information, the U.S. Patent and Trademark Office may not be able to process and/or examine your submission, which may result in termination of proceedings or abandonment of the application or expiration of the patent.

The information provided by you in this form will be subject to the following routine uses:

1. The information on this form will be treated confidentially to the extent allowed under the Freedom of Information Act (5 U.S.C. 552) and the Privacy Act (5 U.S.C 552a). Records from this system of records may be disclosed to the Department of Justice to determine whether disclosure of these records is required by the Freedom of Information Act.
2. A record from this system of records may be disclosed, as a routine use, in the course of presenting evidence to a court, magistrate, or administrative tribunal, including disclosures to opposing counsel in the course of settlement negotiations.
3. A record in this system of records may be disclosed, as a routine use, to a Member of Congress submitting a request involving an individual, to whom the record pertains, when the individual has requested assistance from the Member with respect to the subject matter of the record.
4. A record in this system of records may be disclosed, as a routine use, to a contractor of the Agency having need for the information in order to perform a contract. Recipients of information shall be required to comply with the requirements of the Privacy Act of 1974, as amended, pursuant to 5 U.S.C. 552a(m).
5. A record related to an International Application filed under the Patent Cooperation Treaty in this system of records may be disclosed, as a routine use, to the International Bureau of the World Intellectual Property Organization, pursuant to the Patent Cooperation Treaty.
6. A record in this system of records may be disclosed, as a routine use, to another federal agency for purposes of National Security review (35 U.S.C. 181) and for review pursuant to the Atomic Energy Act (42 U.S.C. 218(c)).
7. A record from this system of records may be disclosed, as a routine use, to the Administrator, General Services, or his/her designee, during an inspection of records conducted by GSA as part of that agency's responsibility to recommend improvements in records management practices and programs, under authority of 44 U.S.C. 2904 and 2906. Such disclosure shall be made in accordance with the GSA regulations governing inspection of records for this purpose, and any other relevant (i.e., GSA or Commerce) directive. Such disclosure shall not be used to make determinations about individuals.
8. A record from this system of records may be disclosed, as a routine use, to the public after either publication of the application pursuant to 35 U.S.C. 122(b) or issuance of a patent pursuant to 35 U.S.C. 151. Further, a record may be disclosed, subject to the limitations of 37 CFR 1.14, as a routine use, to the public if the record was filed in an application which became abandoned or in which the proceedings were terminated and which application is referenced by either a published application, an application open to public inspection or an issued patent.
9. A record from this system of records may be disclosed, as a routine use, to a Federal, State, or local law enforcement agency, if the USPTO becomes aware of a violation or potential violation of law or regulation.

Notice of Allowability	Application No. 17/498,045	Applicant(s) Voto et al.	
	Examiner ERNEST UNELUS	Art Unit 2181	AIA (FITF) Status Yes

-- The MAILING DATE of this communication appears on the cover sheet with the correspondence address--

All claims being allowable, PROSECUTION ON THE MERITS IS (OR REMAINS) CLOSED in this application. If not included herewith (or previously mailed), a Notice of Allowance (PTOL-85) or other appropriate communication will be mailed in due course. **THIS NOTICE OF ALLOWABILITY IS NOT A GRANT OF PATENT RIGHTS.** This application is subject to withdrawal from issue at the initiative of the Office or upon petition by the applicant. See 37 CFR 1.313 and MPEP 1308.

1. ☑ This communication is responsive to Examiner's amendment.
   ☐ A declaration(s)/affidavit(s) under **37 CFR 1.130(b)** was/were filed on _____.

2. ☐ An election was made by the applicant in response to a restriction requirement set forth during the interview on _____; the restriction requirement and election have been incorporated into this action.

3. ☑ The allowed claim(s) is/are 1-15 . As a result of the allowed claim(s), you may be eligible to benefit from the **Patent Prosecution Highway** program at a participating intellectual property office for the corresponding application. For more information, please see **http://www.uspto.gov/patents/init_events/pph/index.jsp** or send an inquiry to **PPHfeedback@uspto.gov.**

4. ☐ Acknowledgment is made of a claim for foreign priority under 35 U.S.C. § 119(a)-(d) or (f).

   Certified copies:

   a) ☐ All b) ☐ Some* c) ☐ None of the:

   1. ☐ Certified copies of the priority documents have been received.
   2. ☐ Certified copies of the priority documents have been received in Application No. _____ .
   3. ☐ Copies of the certified copies of the priority documents have been received in this national stage application from the International Bureau (PCT Rule 17.2(a)).

   * Certified copies not received: _____ .

Applicant has THREE MONTHS FROM THE "MAILING DATE" of this communication to file a reply complying with the requirements noted below. Failure to timely comply will result in ABANDONMENT of this application.
THIS THREE-MONTH PERIOD IS NOT EXTENDABLE.

5. ☐ CORRECTED DRAWINGS (as "replacement sheets") must be submitted.
   ☐ including changes required by the attached Examiner's Amendment / Comment or in the Office action of Paper No./Mail Date _____ .

   Identifying indicia such as the application number (see 37 CFR 1.84(c)) should be written on the drawings in the front (not the back) of each sheet. Replacement sheet(s) should be labeled as such in the header according to 37 CFR 1.121(d).

6. ☐ DEPOSIT OF and/or INFORMATION about the deposit of BIOLOGICAL MATERIAL must be submitted. Note the attached Examiner's comment regarding REQUIREMENT FOR THE DEPOSIT OF BIOLOGICAL MATERIAL.

Attachment(s)

1. ☐ Notice of References Cited (PTO-892)
2. ☐ Information Disclosure Statements (PTO/SB/08), Paper No./Mail Date _____.
3. ☐ Examiner's Comment Regarding Requirement for Deposit of Biological Material _____.
4. ☑ Interview Summary (PTO-413), Paper No./Mail Date. 20221217.
5. ☑ Examiner's Amendment/Comment
6. ☑ Examiner's Statement of Reasons for Allowance
7. ☐ Other _____.

/ERNEST UNELUS/
Primary Examiner, Art Unit 2181

Microchip Ex. 1012, p. 106
Microchip v. Aptiv
IPR2024-00496

DETAILED ACTION

The present application, filed on or after March 16, 2013, is being examined under the first inventor to file provisions of the AIA.

EXAMINER'S AMENDMENT

An examiner's amendment to the record appears below. Should the changes and/or additions be unacceptable to applicant, an amendment may be filed as provided by 37 CFR 1.312. To ensure consideration of such an amendment, it MUST be submitted no later than the payment of the issue fee.

Authorization for this examiner's amendment was given in a telephone interview with Mr. Robert Myers (Reg. No. 69,783) on December 16, 2022. The examiner proposed amendments to better place the application in condition for allowance, particularly adding the limitation that prior arts fail to teach. Mr. Myers agreed.

The application has been amended as follows:

Listing of Claims:

1. (Currently amended) A method, comprising:

providing a first USB port for communication with a USB host;

providing a second USB port for communicating with a consumer USB device;

providing a signal detection circuit for receiving USB signals from the consumer USB device via the second USB port;

routing the USB signals emanating from the consumer USB device to the first USB port via a USB bridge and a USB hub in accordance with a determination by the signal

detection circuit that the consumer device is operating in a USB host mode, wherein the USB bridge includes a bridge controller, buffers, and a plurality of ports; and

routing the USB signals emanating from the consumer USB device to the first USB port via the USB hub and bypassing the USB bridge in accordance with a determination by the signal detection circuit that the consumer device is operating in a USB device mode.

2. (Original) The method according to claim 1, wherein the USB host is embedded in an infotainment system.

3. (Original) The method according to claim 1, wherein the bypassing the USB bridge is performed by a USB routing switch.

4. (Original) The method according to claim 3, wherein the USB routing switch includes the signal detection circuit.

5. (Currently amended) A USB communication management method for interconnecting sources of USB signals, the method comprising:

receiving first USB host signals from a first USB host;

receiving second USB signals from a second USB signal source;

determining, via a signal detection circuit, whether the second USB signals emanate from a second USB host;

routing the second USB signals emanating from the second USB host via a USB bridge and a USB hub to the first USB host, wherein the USB bridge includes a bridge controller, buffers, and a plurality of ports; and

routing the second USB signals not determined to emanate from a USB host via a USB hub to the first USB host while bypassing the USB bridge.

6. (Original) The USB communication management method according to claim 5, further comprising:

determining whether the second USB signals emanate from a USB device; and

routing the second USB signals determined to emanate from the USB device via a USB hub to the first USB host.

7. (Original) The USB communication management method according to claim 5, wherein the first USB host is embedded in an infotainment system.

8. (Original) The method according to claim 5, wherein the routing of the second USB signals is performed by a USB routing switch.

9. (Original) The method according to claim 8, wherein the USB routing switch includes the signal detection circuit.

10. (Currently amended) A USB communication management method for interconnecting sources of USB signals, the method comprising:

receiving a first USB host signal from a first USB host;

receiving a second USB signal from a second USB signal source;

determining whether the second USB signal emanates from a second USB host;

establishing a first communication path via a USB bridge and a USB hub between the first USB host and the second USB signal source in accordance with the second signal emanating from the second USB host<u>, wherein the USB bridge includes a bridge controller, buffers, and a plurality of ports</u>; and establishing a second communication path via a USB hub between the first USB host and the second USB signal source thereby bypassing the

USB bridge in accordance with the second USB signal not to emanating from the second USB host.

11. (Original) The USB communication management method according to claim 10, further comprising:

determining whether the second USB signal emanates from a USB device; and

establishing the second communication path via a USB hub between the first USB host and the second USB signal source which bypasses the USB bridge in accordance with the second USB signal emanating from the USB device.

12. (Original) The method according to claim 10, wherein the second communication path does not include the USB bridge.

13. (Original) The USB communication management method according to claim 12, wherein the first USB host is embedded in an infotainment system.

14. (Original) The method according to claim 10, wherein the establishment of the second communication path is performed by a USB routing switch.

15. (Original) The method according to claim 14, wherein the USB routing switch determines whether the second USB signal emanates from a USB device.

ALLOWABLE SUBJECT MATTER

The primary reason for allowance of claims 1, 5 and 10 in the instant application is that prior arts fail to disclose a method of a dual role USB device, comprising: providing a first USB port for communication with a USB host; providing a second USB port for communicating with

a consumer USB device; providing a signal detection circuit for receiving USB signals from the consumer USB device via the second USB port; routing the USB signals emanating from the consumer USB device to the first USB port via a USB bridge and a USB hub in accordance with a determination by the signal detection circuit that the consumer device is operating in a USB host mode, wherein the USB bridge includes a bridge controller, buffers, and a plurality of ports; and routing the USB signals emanating from the consumer USB device to the first USB port via the USB hub and bypassing the USB bridge in accordance with a determination by the signal detection circuit that the consumer device is operating in a USB device mode.

The remaining claims 2-4, 6-9 and 11-15 are allowed by virtue of their dependencies on the independent claim. Hence, the examiner has allowed claims 1-15.

Any comments considered necessary by applicant must be submitted no later than the payment of the issue fee and, to avoid processing delays, should preferably accompany the issue fee. Such submissions should be clearly labeled "Comments on Statement of Reasons for Allowance."

CLOSING COMMENTS

Conclusion

a. STATUS OF CLAIMS IN THE APPLICATION

The following is a summary of the treatment and status of all claims in the application as recommended by **M.P.E.P. 707.07(i)**:

a(1) CLAIMS ALOWED IN THE APPLICATION

Per the instant office action, claims 1-15 have been allowed.

b. DIRECTION OF FUTURE CORRESPONDENCES

Any inquiry concerning this communication or earlier communications from the examiner should be directed to Ernest Unelus whose telephone number is (571) 272-8596. The examiner can normally be reached on Monday to Friday 9:00 AM to 5:00 PM.

IMPORTANT NOTE

If attempts to reach the above noted Examiner by telephone are unsuccessful, the Examiner's supervisor, Mr. Idriss Alrobaye, can be reached at the following telephone number: Area Code (571) 270-1023.

The fax phone number for the organization where this application or proceeding is assigned is 571-273-8300. Information regarding the status of an application may be obtained from the Patent Application Information Retrieval (PAIR) system. Status information for published applications may be obtained from either Private PAIR or Public PAIR. Status information for unpublished applications is available through Private PAIR only. For more information about the PMR system, see her//pair-direct.uspto.gov. Should you have questions on access to the Private PAIR system, contact the Electronic Business Center (EBC) at 866-217- 91 97 (toll-free).

/Ernest Unelus/
Primary Examiner
Art Unit 2181

Examiner-Initiated Interview Summary	Application No. 17/498,045	Applicant(s) Voto et al.		
	Examiner ERNEST UNELUS	Art Unit 2181	AIA (First Inventor to File) Status Yes	Page 1 of 1

All Participants (applicant, applicants representative, PTO personnel)	**Title**	**Type**
ERNEST UNELUS	Primary Examiner	Telephonic
Robert Myers (Reg. No. 69,783)	Attorney of Record	

Date of Interview: 16 December 2022

Issues Discussed:

Proposed Amendment(s)

The primary reason for allowance of claims 1, 5 and 10 in the instant application is that prior arts fail to disclose a method of a dual role USB device, comprising: providing a first USB port for communication with a USB host; providing a second USB port for communicating with a consumer USB device; providing a signal detection circuit for receiving USB signals from the consumer USB device via the second USB port; routing the USB signals emanating from the consumer USB device to the first USB port via a USB bridge and a USB hub in accordance with a determination by the signal detection circuit that the consumer device is operating in a USB host mode, wherein the USB bridge includes a bridge controller, buffers, and a plurality of ports; and routing the USB signals emanating from the consumer USB device to the first USB port via the USB hub and bypassing the USB bridge in accordance with a determination by the signal detection circuit that the consumer device is operating in a USB device mode
.

/ERNEST UNELUS/ Primary Examiner, Art Unit 2181	

Applicant is reminded that a complete written statement as to the substance of the interview must be made of record in the application file. It is the applicants responsibility to provide the written statement, unless the interview was initiated by the Examiner and the Examiner has indicated that a written summary will be provided. See MPEP 713.04
Please further see:
MPEP 713.04
Title 37 Code of Federal Regulations (CFR) § 1.133 Interviews, paragraph (b)
37 CFR § 1.2 Business to be transacted in writing

Applicant recordation instructions: It is not necessary for applicant to provide a separate record of the substance of interview.

Examiner recordation instructions: Examiners must summarize the substance of any interview of record. A complete and proper recordation of the substance of an interview should include the items listed in MPEP 713.04 for complete and proper recordation including the identification of the general thrust of each argument or issue discussed, a general indication of any other pertinent matters discussed regarding patentability and the general results or outcome of the interview, to include an indication as to whether or not agreement was reached on the issues raised.

Microchip Ex. 1012, p. 113
Microchip v. Aptiv
IPR2024-00496

Index of Claims	Application/Control No.	Applicant(s)/Patent Under Reexamination
	17/498,045	Voto et al.
	Examiner	**Art Unit**
	ERNEST UNELUS	2181

✓	Rejected	-	Cancelled	N	Non-Elected	A	Appeal
=	Allowed	÷	Restricted	I	Interference	O	Objected

CLAIMS

☐ Claims renumbered in the same order as presented by applicant ☐ CPA ☐ T.D. ☐ R.1.47

CLAIM		DATE								
Final	Original	09/09/2022	12/17/2022							
	1	✓	=							
	2	✓	=							
	3	✓	=							
	4	✓	=							
	5	✓	=							
	6	✓	=							
	7	✓	=							
	8	✓	=							
	9	✓	=							
	10	✓	=							
	11	✓	=							
	12	✓	=							
	13	✓	=							
	14	✓	=							
	15	✓	=							

Microchip Ex. 1012, p. 114
Microchip v. Aptiv
IPR2024-00496

Search Notes	Application/Control No.	Applicant(s)/Patent Under Reexamination
	17/498,045	Voto et al.
	Examiner	**Art Unit**
	ERNEST UNELUS	2181

CPC - Searched*		
Symbol	**Date**	**Examiner**
G06F 13/4022, 385, 4045, 4282; G06F 2213/4004, 3812 and G06F 11/3051	09/09/2022	E.U.
G06F 13/4022, 385, 4045, 4282; G06F 2213/4004, 3812 and G06F 11/3051	12/17/2022	E.U.

CPC Combination Sets - Searched*		
Symbol	**Date**	**Examiner**

US Classification - Searched*			
Class	**Subclass**	**Date**	**Examiner**

* See search history printout included with this form or the SEARCH NOTES box below to determine the scope of the search.

Search Notes		
Search Notes	**Date**	**Examiner**
PE2E SEARCH: US-PGPUB; USPAT; USOCR; EPO; JPO	09/09/2022	E.U.
Inventor search utilizing PE2E SEARCH and DAV	09/09/2022	E.U.
Limited text search of G06F 13/4022, 385, 4045, 4282; G06F 2213/4004, 3812 and G06F 11/3051	09/09/2022	E.U.
PE2E SEARCH: US-PGPUB; USPAT; USOCR; EPO; JPO	12/17/2022	E.U.
Inventor search utilizing PE2E SEARCH and DAV	12/17/2022	E.U.
Limited text search of G06F 13/4022, 385, 4045, 4282; G06F 2213/4004, 3812 and G06F 11/3051 and NPL search	12/17/2022	E.U.

/ERNEST UNELUS/ Primary Examiner, Art Unit 2181	

Microchip Ex. 1012, p. 115
Microchip v. Aptiv
IPR2024-00496

Search Notes	Application/Control No.	Applicant(s)/Patent Under Reexamination
	17/498,045	Voto et al.
	Examiner	Art Unit
	ERNEST UNELUS	2181

Interference Search			
US Class/CPC Symbol	US Subclass/CPC Group	Date	Examiner
G06F	13/385	12/17/2022	E.U.

/ERNEST UNELUS/ Primary Examiner, Art Unit 2181	

Microchip Ex. 1012, p. 116
Microchip v. Aptiv
IPR2024-00496

Issue Classification	Application/Control No.	Applicant(s)/Patent Under Reexamination
	17/498,045	Voto et al.
	Examiner	**Art Unit**
	ERNEST UNELUS	2181

CPC

Symbol					Type	Version
G06F	/	13	/	385	F	2013-01-01
G06F	/	13	/	4022	I	2013-01-01
G06F	/	13	/	4045	I	2013-01-01
G06F	/	13	/	4282	I	2013-01-01
G06F	/	2213	/	4004	A	2013-01-01
G06F	/	2213	/	0042	A	2013-01-01
G06F	/	2213	/	3812	A	2013-01-01

CPC Combination Sets

Symbol					Type	Set	Ranking	Version
	/		/					

NONE (Assistant Examiner)	(Date)	**Total Claims Allowed:** 15	
/ERNEST UNELUS/ Primary Examiner, Art Unit 2181 (Primary Examiner)	17 December 2022 (Date)	O.G. Print Claim(s) 1	O.G. Print Figure 6

U.S. Patent and Trademark Office

Part of Paper No.: 20221217

Microchip Ex. 1012, p. 117
Microchip v. Aptiv
IPR2024-00496

Issue Classification	Application/Control No.	Applicant(s)/Patent Under Reexamination
	17/498,045	Voto et al.
	Examiner	**Art Unit**
	ERNEST UNELUS	2181

INTERNATIONAL CLASSIFICATION				
CLAIMED				
G06F	/	13	/	38

NON-CLAIMED				
	/		/	

US ORIGINAL CLASSIFICATION	
CLASS	**SUBCLASS**

CROSS REFERENCES(S)						
CLASS	**SUBCLASS (ONE SUBCLASS PER BLOCK)**					

NONE (Assistant Examiner) (Date)		**Total Claims Allowed:** 15	
/ERNEST UNELUS/ Primary Examiner, Art Unit 2181 (Primary Examiner) (Date)	17 December 2022	O.G. Print Claim(s) 1	O.G. Print Figure 6

U.S. Patent and Trademark Office Part of Paper No.: 20221217

Microchip Ex. 1012, p. 118
Microchip v. Aptiv
IPR2024-00496

Issue Classification	Application/Control No.	Applicant(s)/Patent Under Reexamination
	17/498,045	Voto et al.
	Examiner	**Art Unit**
	ERNEST UNELUS	2181

☐ Claims renumbered in the same order as presented by applicant ☐ CPA ☐ T.D. ☐ R.1.47

CLAIMS

Final	Original	Final	Original	Final	Original	Final	Original	Final	Original	Final	Original	Final	Original	Final	Original
1	1	10	10												
2	2	11	11												
3	3	12	12												
4	4	13	13												
5	5	14	14												
6	6	15	15												
7	7														
8	8														
9	9														

NONE (Assistant Examiner)	(Date)	**Total Claims Allowed:** 15	
/ERNEST UNELUS/ Primary Examiner, Art Unit 2181 (Primary Examiner)	17 December 2022 (Date)	O.G. Print Claim(s) 1	O.G. Print Figure 6

U.S. Patent and Trademark Office Part of Paper No.: 20221217

Microchip Ex. 1012, p. 119
Microchip v. Aptiv
IPR2024-00496

PE2E SEARCH - Search History (Prior Art)

Ref #	Hits	Search Query	DBs	Default Operator	Plurals	British Equivalents	Time Stamp
L15	1	"7502878".pn.	(US-PGPUB; USPAT; USOCR)	OR	ON	ON	2022/12/13 04:47 PM
L16	1	"20220027301"	(US-PGPUB; USPAT; USOCR)	OR	ON	ON	2022/12/13 06:37 PM
L17	1	"20220027301" AND detection NEAR circuit	(US-PGPUB; USPAT; USOCR)	OR	ON	ON	2022/12/13 06:38 PM
L18	1	"20220027301" AND USB NEAR routing NEAR switch	(US-PGPUB; USPAT; USOCR)	OR	ON	ON	2022/12/13 06:46 PM
L19	1343	usb WITH (downstream OR upstream) WITH (port OR plug OR interface) WITH hub	(US-PGPUB; USPAT; USOCR)	OR	ON	ON	2022/12/17 01:44 PM
L20	1343	usb WITH (downstream OR upstream) WITH (port OR plug OR interface) WITH hub	(US-PGPUB; USPAT; USOCR)	OR	ON	ON	2022/12/17 01:44 PM
L21	185	mode WITH usb WITH (downstream OR upstream OR switch$3 OR mux OR multiplex$3) WITH (port OR plug OR interface) WITH hub	(US-PGPUB; USPAT; USOCR)	OR	ON	ON	2022/12/17 01:44 PM
L22	185	mode WITH usb WITH (downstream OR upstream OR switch$3 OR mux OR multiplex$3) WITH (port OR plug OR interface) WITH hub	(US-PGPUB; USPAT; USOCR)	OR	ON	ON	2022/12/17 01:44 PM
L23	100	G06F13/385,4022,4045,387.cpc. AND (mode OR dual) WITH usb WITH (downstream OR upstream OR switch$3 OR mux OR multiplex$3 OR hub) WITH (port OR plug OR interface OR connector) AND hub WITH (switch$3 OR mux OR multiplex$3) WITH mode	(US-PGPUB; USPAT; USOCR)	OR	ON	ON	2022/12/17 01:46 PM
L26	51	G06F2213/4004,3812,0042.cpc. AND (mode OR dual) WITH usb WITH (downstream OR upstream OR switch$3 OR mux OR	(US-PGPUB; USPAT; USOCR)	OR	ON	ON	2022/12/17 01:48 PM

		multiplex$3 OR hub) WITH (port OR plug OR interface OR connector) AND hub WITH (switch$3 OR mux OR multiplex$3) WITH mode					
L27	1	"7502878".pn.	(US-PGPUB; USPAT; USOCR)	OR	ON	ON	2022/12/17 01:48 PM
L28	11	G06F13/387.cpc. AND (mode OR dual) WITH usb WITH (downstream OR upstream OR switch$3 OR mux OR multiplex$3 OR hub) WITH (port OR plug OR interface OR connector) AND hub WITH (switch$3 OR mux OR multiplex$3) WITH mode	(US-PGPUB; USPAT; USOCR)	OR	ON	ON	2022/12/17 01:49 PM
L29	9312	G06F13/385.cpc.	(US-PGPUB; USPAT; USOCR)	OR	ON	ON	2022/12/17 01:50 PM
L31	7673	G06F13/4022.cpc.	(US-PGPUB; USPAT; USOCR)	OR	ON	ON	2022/12/17 01:50 PM
L32	50	dual WITH usb WITH (downstream OR upstream OR switch$3 OR mux OR multiplex$3 OR hub) WITH (port OR plug OR interface OR connector) AND hub WITH (switch$3 OR mux OR multiplex$3) WITH (mode OR state OR role)	(US-PGPUB; USPAT; USOCR)	OR	ON	ON	2022/12/17 02:18 PM

PE2E SEARCH - Search History (Interference)

There are no Interference searches to show.

Microchip Ex. 1012, p. 121
Microchip v. Aptiv
IPR2024-00496

Patents

dual connector protocol usb hub host switch;

About 222,276 results

Download · Side-by-si

Sort by · Relevance · Group by · None · Deduplicate by · Family · Results / page · 10

Extended USB protocol plug and receptacle for implementing single-mode ...

US · US7108560B1 · Horng-Yee Chou · Super Talent Electronics, Inc.
Priority 2003-09-11 · Filed 2004-04-28 · Granted 2006-09-19 · Published 2006-09-19
Host computers and peripheral devices communicating through extended USB connectors and plugs are disclosed. The host computer and peripheral device communicate via a non-USB communication mode, using the extended capability of the extended USB connectors and plugs. Software and hardware to ...

Extended USB protocol plug and receptacle for implementing multi-mode ...

US · US7104848B1 · Horng-Yee Chou · Super Talent Electronics, Inc.
Priority 2003-09-11 · Filed 2004-04-28 · Granted 2006-09-12 · Published 2006-09-12
1. A host computer, comprising: a host processor; a set of protocol processors having at least a first protocol processor, said set of protocol processors being operatively coupled to communicate with said host processor, said first protocol processor being configured to process a first protocol;

Multi-system game controller that operates in multiple USB modes

EP US CN JP KR AU CA TW · US20050221894A1 · Richard Lum · Microsoft Corporation
Priority 2004-03-31 · Filed 2004-03-31 · Published 2005-10-06
A multi-system game controller is capable of operating in different USB (Uniform Serial Bus) modes so that it may be used with different types of host gaming systems. In the described implementation, the game controller operates in a first USB mode with one set of operating parameters when ...

An adapter for connecting a portable memory unit to a host, and a memory device ...

US TW · TWI310159B · Feng Shin Lin · Incomm Technologies Co Ltd
Priority 2005-01-18 · Filed 2005-12-22 · Granted 2009-05-21 · Published 2009-05-21
1310159 X. Applying for a patent garden: L-type is suitable for connecting the portable memory component to the adapter of the host, including mf — · - the first leg - connecting the financial fiber component for transmitting a power source and - data signal, and the material message is The ...

KVM and USB peripheral switch

WO EP US AU CA · US20050216620A1 · Francisc Sandulescu · Francisc Sandulescu
Priority 2004-03-26 · Filed 2004-03-26 · Published 2005-09-29
The present invention relates to a system and method for switching KVM and peripheral interfaces between host interfaces. Provided is a KVM switch where a keyboard and a mouse are emulated at host interfaces of the KVM switch and hosts are emulated at keyboard and mouse interfaces of the KVM ...

Universal serial bus host to host communications

WO US CN DE GB · US9104821B2 · Robert A. Dunstan · Intel Corporation
Priority 2008-12-31 · Filed 2008-12-31 · Granted 2015-08-11 · Published 2015-08-11
In some embodiments a detector detects a host or device coupled via a link. A port negotiates with a port of the detected host or device and determines whether to operate as a host and/or as a device. Other embodiments are described and claimed.

An interface for serial data communication

WO EP US CN KR AF DE DK GB · EP1606949B1 · Clifford Ede · Nokia Corporation
Priority 2003-11-22 · Filed 2004-11-17 · Granted 2008-12-10 · Published 2008-12-10
An interface connectable as a default host to a peripheral or as a default peripheral to a host, for serial data communication between host and peripheral during a session, and comprising: automated means for periodically checking a connection by periodically starting a session when connected as a ...

Emulation of a disconnect of a device

WO EP US CN JP BE EB · US7500002782 · Zong Liang Wu · Nxp B.V.
Priority 1999-12-24 · Filed 2004-08-17 · Granted 2009-03-03 · Published 2009-03-03
USB 2.0 supports communication in low-speed (LS), full speed (FS) and high speed (HS). In the full speed mode, the wire segment between a hub and a device is terminated via a pull-up resistor 480 on the D+ data line on the downstream end of the segment. In the high-speed mode, both signal wires ...

Link system for establishing high speed network communications and file ...

WO EP US CN • US10437776B2 • Christopher Whitlington • Crossport Network Solutions Inc.
Priority 2013-12-08 • Filed 2018-08-03 • Granted 2019-10-08 • Published 2019-10-08
The invention claimed is: 1. A network host, comprising: a host processing unit, the host processing unit capable of logical processing and address processing and provided to establish a network and control management module for addressing and network switching, the host processing unit including:

Usb security gateway

EP US • US20210006497A1 • Aviv Soffer • High Sec Labs Ltd.
Priority 2014-06-17 • Filed 2020-09-01 • Published 2021-01-07
A USB security gateway device is integrated within a host computer. The USB security gateway device is used for protecting a USB port of a host computer against interaction with unauthorized USB device. The USB security gateway device qualifies any USB peripheral device before it allows it to ...

Next > >> About 222,276 results

Top 1000 results by filing date

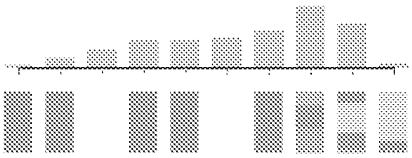

Relative count of top 5 values

Assignees	Inventors	CPCs
爱信精机有限责任公司		4
Intel Corporation		4
Nvidia Corporation		3
Ethicon Llc		3
Ethicon LLC		2

Expand

Bibliographic Data

Application No: 17/498,045

Foreign Priority claimed: ○ Yes ◉ No

35 USC 119 (a-d) conditions met: ☐ Yes ☐ No ☐ Met After Allowance

Verified and Acknowledged: /ERNEST UNELUS/ (Examiner's Signature) E.U. (Initials)

Title: FLEXIBLE MOBILE DEVICE CONNECTIVITY TO AUTOMOTIVE SYSTEMS WITH USB HUBS

FILING or 371(c) DATE	CLASS	GROUP ART UNIT	ATTORNEY DOCKET NO.
10/11/2021 **RULE**	710	2181	7021.145US5

APPLICANTS

Aptiv Technologies Limited, St. Michael, BARBADOS

INVENTORS

Robert M. Voto, Clarkston, MI, UNITED STATES

Shyambabu Yeda, Rochester Hills, MI, UNITED STATES

Craig Petku, Clarkston, MI, UNITED STATES

CONTINUING DATA

This application is a CON of 16660083 10/22/2019 PAT 11176072

16660083 is a CON of 15441775 02/24/2017 PAT 10545899

15441775 is a CON of 15268728 09/19/2016 PAT 9619420

15268728 is a CON of 14487947 09/16/2014 PAT 9460037

14487947 has PRO of 61882915 09/26/2013

FOREIGN APPLICATIONS

IF REQUIRED, FOREIGN LICENSE GRANTED**

10/20/2021

STATE OR COUNTRY

UNITED STATES

ADDRESS

Billion & Armitage - Aptiv
7401 Metro Blvd.
Suite 425
Minneapolis, MN 55439
UNITED STATES

FILING FEE RECEIVED

$1,820

Doc Code: MFEE.C.AD
Document Description: Maintenance Fee Address Change

PTO/AIA/47 (12-20)
Approved for use through 09/30/2021. OMB 0651-0016
U.S. Patent and Trademark Office; U.S. DEPARTMENT OF COMMERCE
Under the Paperwork Reduction Act of 1995, no person is required to respond to a collection of information unless it displays a valid OMB control number.

"FEE ADDRESS" INDICATION FORM

Address to:
Mail Stop Maintenance Fee
Director of the United States
Patent and Trademark Office
P.O. Box 1450
Alexandria, VA 22313-1450

-OR-

Fax to:
571-273-6500

INSTRUCTIONS: The issue fee must have been paid for the application(s) listed on this form. In addition, only an address represented by a Customer Number can be established as the fee address for maintenance fee purposes (hereafter, fee address). A fee address should be established when correspondence related to maintenance fees should be mailed to a different address than the correspondence address for the application.

When to check the first box below: If you have a Customer Number to represent the fee address.

When to check the second box below: If you have no Customer Number representing the desired fee address, in which case a completed Request for Customer Number (PTO/SB/125) must be attached to this form. For more information on Customer Numbers, see the Manual of Patent Examining Procedure (MPEP) § 403.

For the following listed application(s), please recognize as the "Fee Address" under the provisions of 37 CFR 1.363 the address associated with:

☑ Customer Number: 22851

OR

☐ The attached Request for Customer Number form (PTO/SB/125)

PATENT NUMBER (if known)	APPLICATION NUMBER
	17/498,045

Completed by (check one):

☐ Applicant/Inventor

☑ Attorney or Agent of record 69,783
Reg. No.

☐ Assignee of record of the entire interest. See 37 CFR 3.71. Statement under 37 CFR 3.73(c) (Form PTO/AIA/96) is enclosed or was filed on

(Date)

/Robert Myers/
Signature

Robert Myers
Typed or printed name

(952) 697-2641
Requester's telephone number

2023-03-13
Date

NOTE: Signatures of all the inventors or assignees of record of the entire interest or their representative(s) are required. If the assignee is a juristic entity, this form must be signed by a patent practitioner (attorney or agent) of record. Submit multiple forms if more than one signature is required, see below*.

☑ *Total of 1 forms are submitted

This collection of information is required by 37 CFR 1.363. The information is required to obtain or retain a benefit by the public, which is to indicate (and for the USPTO to process) a fee address. Confidentiality is governed by 35 U.S.C. 122 and 37 CFR 1.11 and 1.14. This collection is estimated to take 5 minutes to complete, including gathering, preparing, and submitting the completed form to the USPTO. Time will vary depending upon the individual case. Any comments on the amount of time you require to complete this form and/or suggestions for reducing this burden, should be sent to the Chief Information Officer, U.S. Patent and Trademark Office, U.S. Department of Commerce, P.O. Box 1450, Alexandria, VA 22313-1450. DO NOT SEND COMPLETED FORMS TO THE PREVIOUS ADDRESS. **SEND COMPLETED FORMS TO: Mail Stop Maintenance Fee, Director of the United States Patent and Trademark Office, P.O. Box 1450, Alexandria, VA 22313-1450.**

If you need assistance in completing the form, call 1-800-PTO-9199 and select option 2.

Privacy Act Statement

The **Privacy Act of 1974 (P.L. 93-579)** requires that you be given certain information in connection with your submission of the attached form related to a patent application or patent. Accordingly, pursuant to the requirements of the Act, please be advised that: (1) the general authority for the collection of this information is 35 U.S.C. 2(b)(2); (2) furnishing of the information solicited is voluntary; and (3) the principal purpose for which the information is used by the U.S. Patent and Trademark Office is to process and/or examine your submission related to a patent application or patent. If you do not furnish the requested information, the U.S. Patent and Trademark Office may not be able to process and/or examine your submission, which may result in termination of proceedings or abandonment of the application or expiration of the patent.

The information provided by you in this form will be subject to the following routine uses:

1. The information on this form will be treated confidentially to the extent allowed under the Freedom of Information Act (5 U.S.C. 552) and the Privacy Act (5 U.S.C 552a). Records from this system of records may be disclosed to the Department of Justice to determine whether disclosure of these records is required by the Freedom of Information Act.
2. A record from this system of records may be disclosed, as a routine use, in the course of presenting evidence to a court, magistrate, or administrative tribunal, including disclosures to opposing counsel in the course of settlement negotiations.
3. A record in this system of records may be disclosed, as a routine use, to a Member of Congress submitting a request involving an individual, to whom the record pertains, when the individual has requested assistance from the Member with respect to the subject matter of the record.
4. A record in this system of records may be disclosed, as a routine use, to a contractor of the Agency having need for the information in order to perform a contract. Recipients of information shall be required to comply with the requirements of the Privacy Act of 1974, as amended, pursuant to 5 U.S.C. 552a(m).
5. A record related to an International Application filed under the Patent Cooperation Treaty in this system of records may be disclosed, as a routine use, to the International Bureau of the World Intellectual Property Organization, pursuant to the Patent Cooperation Treaty.
6. A record in this system of records may be disclosed, as a routine use, to another federal agency for purposes of National Security review (35 U.S.C. 181) and for review pursuant to the Atomic Energy Act (42 U.S.C. 218(c)).
7. A record from this system of records may be disclosed, as a routine use, to the Administrator, General Services, or his/her designee, during an inspection of records conducted by GSA as part of that agency's responsibility to recommend improvements in records management practices and programs, under authority of 44 U.S.C. 2904 and 2906. Such disclosure shall be made in accordance with the GSA regulations governing inspection of records for this purpose, and any other relevant (*i.e.*, GSA or Commerce) directive. Such disclosure shall not be used to make determinations about individuals.
8. A record from this system of records may be disclosed, as a routine use, to the public after either publication of the application pursuant to 35 U.S.C. 122(b) or issuance of a patent pursuant to 35 U.S.C. 151. Further, a record may be disclosed, subject to the limitations of 37 CFR 1.14, as a routine use, to the public if the record was filed in an application which became abandoned or in which the proceedings were terminated and which application is referenced by either a published application, an application open to public inspection or an issued patent.
9. A record from this system of records may be disclosed, as a routine use, to a Federal, State, or local law enforcement agency, if the USPTO becomes aware of a violation or potential violation of law or regulation.

PART B - FEE(S) TRANSMITTAL

Complete and send this form, together with applicable fee(s), by mail or fax, or via EFS-Web.

By mail, send to: Mail Stop ISSUE FEE
Commissioner for Patents
P.O. Box 1450
Alexandria, Virginia 22313-1450

By fax, send to: (571)-273-2885

INSTRUCTIONS: This form should be used for transmitting the ISSUE FEE and PUBLICATION FEE (if required). Blocks 1 through 5 should be completed where appropriate. All further correspondence including the Patent, advance orders and notification of maintenance fees will be mailed to the current correspondence address as indicated unless corrected below or directed otherwise in Block 1, by (a) specifying a new correspondence address; and/or (b) indicating a separate "FEE ADDRESS" for maintenance fee notifications.

CURRENT CORRESPONDENCE ADDRESS (Note: Use Block 1 for any change of address)

171991 7590 01/10/2023
Billion & Armitage - Aptiv
7401 Metro Blvd.
Suite 425
Minneapolis, MN 55439

Note: A certificate of mailing can only be used for domestic mailings of the Fee(s) Transmittal. This certificate cannot be used for any other accompanying papers. Each additional paper, such as an assignment or formal drawing, must have its own certificate of mailing or transmission.

Certificate of Mailing or Transmission

I hereby certify that this Fee(s) Transmittal is being deposited with the United States Postal Service with sufficient postage for first class mail in an envelope addressed to the Mail Stop ISSUE FEE address above, or being transmitted to the USPTO via EFS-Web or by facsimile to (571) 273-2885, on the date below.

Rebecca Krueger	(Typed or printed name)
/Rebecca Krueger/	(Signature)
March 13, 2023	(Date)

APPLICATION NO.	FILING DATE	FIRST NAMED INVENTOR	ATTORNEY DOCKET NO.	CONFIRMATION NO.
17/498,045	10/11/2021	Robert M. Voto	7021.145US5	2854

TITLE OF INVENTION: FLEXIBLE MOBILE DEVICE CONNECTIVITY TO AUTOMOTIVE SYSTEMS WITH USB HUBS

APPLN. TYPE	ENTITY STATUS	ISSUE FEE DUE	PUBLICATION FEE DUE	PREV. PAID ISSUE FEE	TOTAL FEE(S) DUE	DATE DUE
nonprovisional	UNDISCOUNTED	$1200	$0.00	$0.00	$1200	04/10/2023

EXAMINER	ART UNIT	CLASS-SUBCLASS
UNELUS, ERNEST	2181	710-313000

1. Change of correspondence address or indication of "Fee Address" (37 CFR 1.363).

☐ Change of correspondence address (or Change of Correspondence Address form PTO/AIA/122 or PTO/SB/122) attached.

☒ "Fee Address" indication (or "Fee Address" Indication form PTO/AIA/47 or PTO/SB/47; Rev 03-02 or more recent) attached. **Use of a Customer Number is required.**

2. For printing on the patent front page, list
(1) The names of up to 3 registered patent attorneys or agents OR, alternatively,
(2) The name of a single firm (having as a member a registered attorney or agent) and the names of up to 2 registered patent attorneys or agents. If no name is listed, no name will be printed.

1 Billion & Armitage
2
3

3. ASSIGNEE NAME AND RESIDENCE DATA TO BE PRINTED ON THE PATENT (print or type)

PLEASE NOTE: Unless an assignee is identified below, no assignee data will appear on the patent. If an assignee is identified below, the document must have been previously recorded, or filed for recordation, as set forth in 37 CFR 3.11 and 37 CFR 3.81(a). Completion of this form is NOT a substitute for filing an assignment.

(A) NAME OF ASSIGNEE	(B) RESIDENCE: (CITY and STATE OR COUNTRY)
APTIV TECHNOLOGIES LIMITED	ST. MICHAEL, BARBADOS

Please check the appropriate assignee category or categories (will not be printed on the patent) : ☐ Individual ☒ Corporation or other private group entity ☐ Government

4a. Fees submitted: ☒ Issue Fee ☐ Publication Fee (if required) ☐ Advance Order - # of Copies _____

4b. Method of Payment: *(Please first reapply any previously paid fee shown above)*

☒ Electronic Payment via EFS-Web ☐ Enclosed check ☐ Non-electronic payment by credit card (Attach form PTO-2038)

☒ The Director is hereby authorized to charge the required fee(s), any deficiency, or credit any overpayment to Deposit Account No. 50-3141

5. **Change in Entity Status** (from status indicated above)

☐ Applicant certifying micro entity status. See 37 CFR 1.29

☐ Applicant asserting small entity status. See 37 CFR 1.27

☐ Applicant changing to regular undiscounted fee status.

NOTE: Absent a valid certification of Micro Entity Status (see forms PTO/SB/15A and 15B), issue fee payment in the micro entity amount will not be accepted at the risk of application abandonment.
NOTE: If the application was previously under micro entity status, checking this box will be taken to be a notification of loss of entitlement to micro entity status.
NOTE: Checking this box will be taken to be a notification of loss of entitlement to small or micro entity status, as applicable.

NOTE: This form must be signed in accordance with 37 CFR 1.31 and 1.33. See 37 CFR 1.4 for signature requirements and certifications.

Authorized Signature /Robert Myers/ Date 2023-03-13

Typed or printed name Robert Myers Registration No. 69,783

PTOL-85 Part B (08-18) Approved for use through 01/31/2020 OMB 0651-0033 U.S. Patent and Trademark Office; U.S. DEPARTMENT OF COMMERCE

Microchip Ex. 1012, p. 128
Microchip v. Aptiv
IPR2024-00496

Electronic Patent Application Fee Transmittal

Application Number:	17498045
Filing Date:	11-Oct-2021
Title of Invention:	FLEXIBLE MOBILE DEVICE CONNECTIVITY TO AUTOMOTIVE SYSTEMS WITH USB HUBS
First Named Inventor/Applicant Name:	Robert M. Voto
Filer:	Robert James Myers/Rebecca Krueger
Attorney Docket Number:	7021.145US5

Filed as Large Entity

Filing Fees for Utility under 35 USC 111(a)

Description	Fee Code	Quantity	Amount	Sub-Total in USD($)
Basic Filing:				
Pages:				
Claims:				
Miscellaneous-Filing:				
Petition:				
Patent-Appeals-and-Interference:				
Post-Allowance-and-Post-Issuance:				
UTILITY APPL ISSUE FEE	1501	1	1200	1200

Description	Fee Code	Quantity	Amount	Sub-Total in USD($)
Extension-of-Time:				
Miscellaneous:				
			Total in USD ($)	**1200**

Electronic Acknowledgement Receipt

EFS ID:	47671145
Application Number:	17498045
International Application Number:	
Confirmation Number:	2854
Title of Invention:	FLEXIBLE MOBILE DEVICE CONNECTIVITY TO AUTOMOTIVE SYSTEMS WITH USB HUBS
First Named Inventor/Applicant Name:	Robert M. Voto
Customer Number:	171991
Filer:	Robert James Myers/Rebecca Krueger
Filer Authorized By:	Robert James Myers
Attorney Docket Number:	7021.145US5
Receipt Date:	13-MAR-2023
Filing Date:	11-OCT-2021
Time Stamp:	12:50:09
Application Type:	Utility under 35 USC 111(a)

Payment information:

Submitted with Payment	yes
Payment Type	CARD
Payment was successfully received in RAM	$1200
RAM confirmation Number	E20233CC52568935
Deposit Account	503141
Authorized User	Rebecca Krueger
The Director of the USPTO is hereby authorized to charge indicated fees and credit any overpayment as follows: 37 CFR 1.21 (Miscellaneous fees and charges)	

File Listing:

Document Number	Document Description	File Name	File Size(Bytes)/ Message Digest	Multi Part /.zip	Pages (if appl.)
1	Post Allowance Communication - Incoming	7021-145US5-Resply-NOA-Interview-Summary.pdf	85303 e6ed87761900041b8e4d901e872e128182f02c03	no	2
Warnings:					
Information:					
2	Maintenance Fee Address Change	7021-145US5_FEE-ADDRESS.pdf	231274 9c08123f7672b69e13435d855c77a14ab658eae4	no	2
Warnings:					
Information:					
3	Issue Fee Payment (PTO-85B)	7021-145US5-Issue-Fee.pdf	123930 c0569f755a28e6c516952b5ce2755ffe877b12c0	no	1
Warnings:					
Information:					
4	Fee Worksheet (SB06)	fee-info.pdf	38098 58025aab7bce7e0b477c6dfa61c10f22bf330d6f	no	2
Warnings:					
Information:					
			Total Files Size (in bytes):	478605	

This Acknowledgement Receipt evidences receipt on the noted date by the USPTO of the indicated documents, characterized by the applicant, and including page counts, where applicable. It serves as evidence of receipt similar to a Post Card, as described in MPEP 503.

New Applications Under 35 U.S.C. 111
If a new application is being filed and the application includes the necessary components for a filing date (see 37 CFR 1.53(b)-(d) and MPEP 506), a Filing Receipt (37 CFR 1.54) will be issued in due course and the date shown on this Acknowledgement Receipt will establish the filing date of the application.
National Stage of an International Application under 35 U.S.C. 371
If a timely submission to enter the national stage of an international application is compliant with the conditions of 35 U.S.C. 371 and other applicable requirements a Form PCT/DO/EO/903 indicating acceptance of the application as a national stage submission under 35 U.S.C. 371 will be issued in addition to the Filing Receipt, in due course.
New International Application Filed with the USPTO as a Receiving Office
If a new international application is being filed and the international application includes the necessary components for an international filing date (see PCT Article 11 and MPEP 1810), a Notification of the International Application Number and of the International Filing Date (Form PCT/RO/105) will be issued in due course, subject to prescriptions concerning national security, and the date shown on this Acknowledgement Receipt will establish the international filing date of the application.

IN THE UNITED STATES PATENT AND TRADEMARK OFFICE

Inventor(s):	Robert M. Voto, et al.	Examiner:	Ernest Unelus
Application No.:	17/498,045	Group Art Unit:	2181
Filed:	October 11, 2021	Docket No.:	7021.145US5
		Confirmation No:	2854
Title:	FLEXIBLE MOBILE DEVICE CONNECTIVITY TO AUTOMOTIVE SYSTEMS WITH USB HUBS		

This paper is being filed electronically with the U.S. Patent Office

REPLY TO NOTICE OF ALLOWANCE

Enclosed is a completed Part B – Fee(s) Transmittal in response to the Notice of Allowance for the above referenced application. The issue fee is being paid with this reply via the Electronic Filing System (EFS-Web). Please apply those fees and any other necessary charges or credits to Deposit Account No. 50-3141, referencing the attorney docket number listed above.

EXAMINER INITIATED INTERVIEW SUMMARY

Applicant thanks Examiner Ernest Unelus for the courtesy of initiating a telephone interview on December 16, 2022, to discuss a proposed examiner's amendment to claims 1, 5, and 10 with Applicant's representative Robert Myers. Mr. Myers agreed to consider the proposed amendments and provide a listing of amended claims for Examiner Unelus' consideration after consultation with his client.

COMMENTS ON EXAMINER'S REASONS FOR ALLOWANCE

It is recognized that, in accordance with M.P.E.P. § 1302.14, the Examiner's reasons for allowance need not set forth all of the details as to why the claims are allowed. In the above referenced application, it is not conceded that the Examiner's stated reasons are the only reasons for which the claims are allowable. The Examiner's reasons for allowance indicate that particular claim elements are not disclosed or suggested by the prior art of record, yet the claim may be patentable for other reasons as well, including the inventive combination of all of the recited claim

elements. It is not conceded that the specific limitations identified by the Examiner are necessary to distinguish the claim over the art of record or to satisfy the requirements of 35 U.S.C. § 112. Moreover, the Examiner does not assert, nor would it be conceded, that the Examiner's reasons have any bearing on the patentability of claims in any other application directed to the disclosed subject matter.

In addition, each dependent claim stands on its own and may be allowable on its own merits. In particular, each dependent claim may be allowable on the basis of a combination of some of the features recited in the dependent claim and its base claim(s), which combination of features may not include all of the limitations identified in the Examiner's reasons for allowance.

If necessary, the Commissioner is hereby authorized in this, concurrent, and future replies, to charge payment or credit any overpayment to Deposit Account No. 50-3141 for any additional fees required under 37 C.F.R. §§ 1.16 or 1.17; particularly, extension of time fees.

Respectfully submitted,

Billion & Armitage
7401 Metro Blvd., Suite 425
Minneapolis, MN 55439
(952) 697.2630 – main phone
(952) 697.2631 – facsimile

Dated:March 13, 2023

By /Robert J. Myers/
Robert J. Myers
Reg. No. 69,783

RJM/rlk

Microchip Ex. 1012, p. 135
Microchip v. Aptiv
IPR2024-00496

UNITED STATES PATENT AND TRADEMARK OFFICE

UNITED STATES DEPARTMENT OF COMMERCE
United States Patent and Trademark Office
Address: COMMISSIONER FOR PATENTS
P.O. Box 1450
Alexandria, Virginia 22313-1450
www.uspto.gov

APPLICATION NO.	ISSUE DATE	PATENT NO.	ATTORNEY DOCKET NO.	CONFIRMATION NO.
17/498,045	04/18/2023	11630792	7021.145US5	2854

171991 7590 03/29/2023
Billion & Armitage - Aptiv
7401 Metro Blvd.
Suite 425
Minneapolis, MN 55439

ISSUE NOTIFICATION

The projected patent number and issue date are specified above. The patent will issue electronically. The electronically issued patent is the official patent grant pursuant to 35 U.S.C. § 153. The patent may be accessed on or after the issue date through Patent Center at https://patentcenter.uspto.gov/. The patent will be available in both the public and the private sides of Patent Center. Further assistance in electronically accessing the patent, or about Patent Center, is available by calling the Patent Electronic Business Center at 1-888-217-9197.

The USPTO is implementing electronic patent issuance with a transition period, during which period the USPTO will mail a ceremonial paper copy of the electronic patent grant to the correspondence address of record. Additional copies of the patent (i.e., certified and presentation copies) may be ordered for a fee from the USPTO's Certified Copy Center at https://certifiedcopycenter.uspto.gov/index.html. The Certified Copy Center may be reached at (800)972-6382.

Determination of Patent Term Adjustment under 35 U.S.C. 154 (b)
(application filed on or after May 29, 2000)

The Patent Term Adjustment is 0 day(s). Any patent to issue from the above-identified application will include an indication of the adjustment on the front page.

If a Continued Prosecution Application (CPA) was filed in the above-identified application, the filing date that determines Patent Term Adjustment is the filing date of the most recent CPA.

Applicant will be able to obtain more detailed information by accessing the Patent Application Information Retrieval (PAIR) WEB site (http://pair.uspto.gov).

Any questions regarding the Patent Term Extension or Adjustment determination should be directed to the Office of Patent Legal Administration at (571)-272-7702. Questions relating to issue and publication fee payments should be directed to the Application Assistance Unit (AAU) of the Office of Patents Stakeholder Experience (OPSE), Stakeholder Support Division (SSD) at (571)-272-4200.

INVENTOR(s) (Please see PAIR WEB site http://pair.uspto.gov for additional inventors):

Robert M. Voto, Clarkston, MI;
Shyambabu Yeda, Rochester Hills, MI;
Craig Petku, Clarkston, MI;

APPLICANT(s) (Please see PAIR WEB site http://pair.uspto.gov for additional applicants):

Aptiv Technologies Limited, St. Michael, BARBADOS;

The United States represents the largest, most dynamic marketplace in the world and is an unparalleled location for business investment, innovation, and commercialization of new technologies. The USA offers tremendous resources and advantages for those who invest and manufacture goods here. Through SelectUSA, our nation works to encourage and facilitate business investment. To learn more about why the USA is the best country in the world to develop technology, manufacture products, and grow your business, visit SelectUSA.gov.

Microchip Ex. 1012, p. 137
Microchip v. Aptiv
IPR2024-00496

(12) INTERNATIONAL APPLICATION PUBLISHED UNDER THE PATENT COOPERATION TREATY (PCT)

(19) World Intellectual Property Organization
International Bureau

(43) International Publication Date
5 February 2004 (05.02.2004)

PCT

(10) International Publication Number
WO 2004/012090 A1

(51) International Patent Classification[7]: G06F 13/00

(21) International Application Number: PCT/US2003/021250

(22) International Filing Date: 8 July 2003 (08.07.2003)

(25) Filing Language: English

(26) Publication Language: English

(30) Priority Data:
10/206,286 26 July 2002 (26.07.2002) US

(71) Applicant: **MOTOROLA, INC.** [US/US]; 1303 East Algonquin Road, Schaumburg, IL 60196 (US).

(72) Inventors: **OVERTOOM, Eric, J.**; 845 Merrill Lane, Grayslake, IL 60030 (US). **BRAUN, Mark, R.**; 2450 Towne Boulevard, Arlington Heights, IL 60004 (US). **CARLSON, Mark**; 289 Spring Valley Way, Round Lake, IL 60073 (US).

(74) Agents: **VAAS, Randall, S.** et al.; 600 North US Highway 45, AN475, Libertyville, IL 60048 (US).

(81) Designated States *(national)*: AE, AG, AL, AM, AT, AU, AZ, BA, BB, BG, BR, BY, BZ, CA, CH, CN, CO, CR, CU, CZ, DE, DK, DM, DZ, EC, EE, ES, FI, GB, GD, GE, GH, GM, HR, HU, ID, IL, IN, IS, JP, KE, KG, KP, KR, KZ, LC, LK, LR, LS, LT, LU, LV, MA, MD, MG, MK, MN, MW, MX, MZ, NI, NO, NZ, OM, PG, PH, PL, PT, RO, RU, SC, SD, SE, SG, SK, SL, SY, TJ, TM, TN, TR, TT, TZ, UA, UG, UZ, VC, VN, YU, ZA, ZM, ZW.

(84) Designated States *(regional)*: ARIPO patent (GH, GM, KE, LS, MW, MZ, SD, SL, SZ, TZ, UG, ZM, ZW), Eurasian patent (AM, AZ, BY, KG, KZ, MD, RU, TJ, TM), European patent (AT, BE, BG, CH, CY, CZ, DE, DK, EE, ES, FI, FR, GB, GR, HU, IE, IT, LU, MC, NL, PT, RO, SE, SI, SK, TR), OAPI patent (BF, BJ, CF, CG, CI, CM, GA, GN, GQ, GW, ML, MR, NE, SN, TD, TG).

Published:
— *with international search report*

For two-letter codes and other abbreviations, refer to the "Guidance Notes on Codes and Abbreviations" appearing at the beginning of each regular issue of the PCT Gazette.

(54) Title: DUAL-ROLE COMPATIBLE USB HUB DEVICE AND METHOD

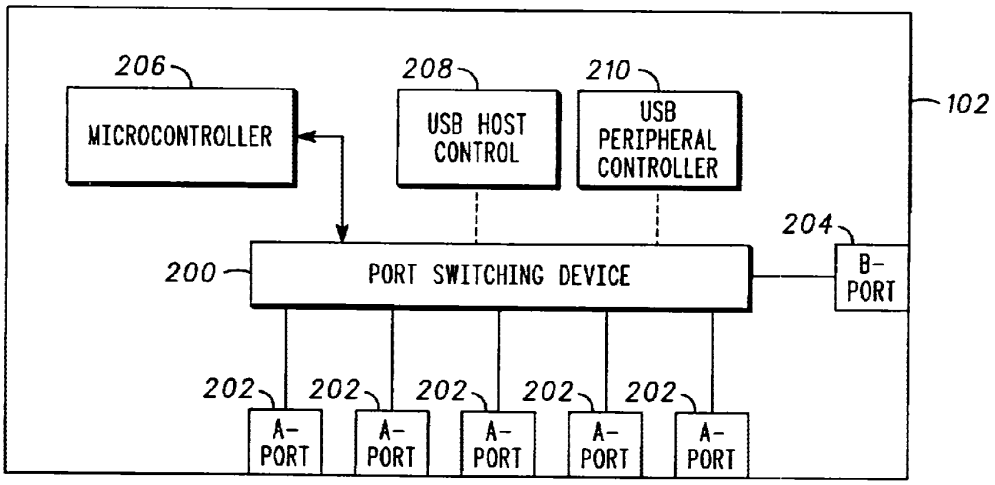

(57) Abstract: A Universal Serial Bus hub apparatus (102) and method is disclosed that is compatible with the On-the-Go (OTG) supplement to the USB 2.0 specification so as to enable dual-role devices (OTG devices) to be connected via a hub. The hub includes a number of ports (202) that are configured to connect the hub to one or more external devices, which may include OTG devices. A controller within the hub controls operations therein. The hub also includes a port switching (200) device controlled by the controller for selectively allowing one of the number of ports to act as a host port and the other remaining ports to act as device ports.

WO 2004/012090 A1

A DUAL-ROLE COMPATIBLE USB HUB DEVICE AND METHOD

BACKGROUND

The present invention relates to computer networking and, more particularly, to a universal serial bus (USB) hub device that is compatible with dual-role compatible devices such as USB On-the-Go (OTG) devices.

A common host-device protocol is the universal serial bus (USB) protocol. USB is a high speed serial bus that supports devices such as keyboards, printers, scanners, pointing devices, personal data assistants (PDA's) and cellular telephones. USB has become a standard within the computer industry as this protocol affords networking of multiple devices with minimal connections and user friendliness.

In a typical USB architecture, two or more devices are interconnected for communication. These devices are generally referred to as USB devices, which are defined by hardware and software components within the USB device. Generally, there are one or more USB devices that are defined as peripheral or "slave" devices, which may be input or output devices. Examples of typical peripherals include printers, modems, scanners or any other devices that exchange data with a host computer (or "master" device). The peripheral devices may be connected directly to a host or connected via a USB hub. Transactions occur between the peripherals and the host. The host controls the transactions between the peripheral devices and the host. Typically, the host controls the transactions according to the requirements of the USB 2.0 specification.

After the initial USB 2.0 specification was written, it was recognized that many peripheral devices, particularly portable devices, would benefit from being able to communicate directly with each other over the USB interface. However, since USB communication can only take place between a host (usually a personal computer) and a peripheral device, in order to qualify as a host, a device must take on several characteristics including storage for a large number of device drivers, the ability to source a large current and a series "A-type" host connector receptacle. It is not practical, however, for portable devices to have all of these characteristics.

Moreover, in many cases these characteristics are not necessary in order to interface portable devices with each other. Accordingly, a supplement to the USB 2.0 specification was developed to enable peer-to-peer communication without the use of a personal computer or traditional host device. This supplement is commonly referred to as "On-the-Go" (OTG). Hence, On-the-Go (OTG) peripherals are classified as dual role devices (DRD's) that are able to operate as either a host controller or as a peripheral device dependent on the particular use the device is undergoing at a specific time. The devices are able to exchange the host controller functionality using a protocol device in the OTG supplement to the USB 2.0 specification. Additionally, the OTG supplement includes assurance that when these peripheral devices are attached to a standard host (i.e., a personal computer) the devices are only able to operate as peripherals.

Within the USB OTG supplement, operation between two peripheral devices is defined. Specifically, definitions sufficient to support this operation are included for aspects of host negotiation protocol (HNP) and the actions of transferring the host capability between two communicating devices. These devices are described as the "A-device" and the "B-device" and are determined based on which end of the connecting USB cable is attached to the device. According to the OTG supplement, the "A-device" starts out as the host in all transactions and always provides bus power (V_{bus}). This protocol and operation, however, does not support transfer of host functionality when more than two devices are used in a system.

Typically in USB, multiple devices may be attached using multiple USB ports on one device or by using a USB hub. However, in a system that would involve a hub where multiple OTG devices (as well as non-OTG devices) are attached, any of the OTG devices may desire to be the host of the system at various times using the resources of the other devices connected to the hub. Current USB hubs, however, do not support the transfer of the host functionality because typical hub structures are configured to have a single host connection that is fanned out to multiple device connections. Thus, a conventional USB hub is unable to change which port is the host port and participate in signaling required to support OTG host transfer protocol.

Microchip Ex. 1012, p. 140
Microchip v. Aptiv
IPR2024-00496

BRIEF DESCRIPTION OF THE DRAWINGS

FIG. 1 illustrates an example of a system having On-the-Go devices connected with an On-the-Go hub constructed in accordance with the teachings of the present invention.

FIG. 2 illustrates an example of a block diagram configuration of an OTG hub.

FIG. 3 illustrates a block diagram showing initial port connections in the hub of FIG. 2.

FIG. 4 illustrates a state diagram for an OTG hub operating in accordance with the teachings of the present invention.

FIG. 5 illustrates an alternate port connection of the hub of FIG. 2.

FIG. 6 illustrates still another alternate port connection of the hub of FIG. 2.

FIGs. 7-9 illustrate a flow chart of an example operation of an OTG hub.

FIG. 10 illustrates an example of a wiring diagram of an OTG hub having seven ports constructed in accordance with the teachings of the present invention.

FIG. 11 illustrates a particular example of signal routing for the circuit of FIG. 8 given a particular configuration where a PC is connected to the hub.

FIG. 12 illustrates a further example of signal routing for the hub of FIG. 8 according to another particular configuration where an "A-type" port serves as a host device.

FIG. 13 illustrates a wiring diagram of another example of an OTG hub.

Microchip Ex. 1012, p. 141
Microchip v. Aptiv
IPR2024-00496

DETAILED DESCRIPTION OF THE PREFERRED EXAMPLES

An example of a system configuration 100 is illustrated in FIG. 1 utilizing an On-the-Go hub 102 constructed in accordance with the present disclosure. The system 100 may be any one of various systems where numerous devices are interconnected and, more particular, dual-role devices according to the USB OTG supplement. In the particular example of FIG. 1, this configuration might be found in an automobile, for example. In the system 100 a gateway 104 may be utilized that contains the On-the-Go hub 102. Various devices may then be connected to the hub 102 within the gateway 104 such as a personal data assistant 106, an On-the-Go phone 108 or a media interface 110. Thus, in this system 100 it may be possible for the phone 108, for example, to access contact information within the PDA 106. As another example, the media interface 110 may utilize the display of the PDA 106 to play back video clips. In each of these examples, the device (i.e., the phone 108 or media interface 110) is required to be the host of the system 100. Furthermore, at different points in time when the various devices become host of the system, the host functionality must be transferred according to the USB 2.0 specification and the OTG host negotiation protocol (HNP). Accordingly, the hub 102, which is designed to accommodate On-the-Go capability, should preferably be able to perform one or more of the following functions:

(1) Designate any of the ports in the hub to be the host port and configuring all other ports to be downstream ports;

(2) Participate in OTG host negotiation protocol;

(3) Remain compliant with USB hub requirements for any given host port configuration; and

(4) Provide conventional hub functionality of a personal computer or other standard host devices attached to the hub.

In accordance with the last criterion enumerated above, a Personal Computer 114 is shown optionally connected to the On-the-Go (OTG) hub 102 whereupon the remainder of the devices 106, 108 and 110 will revert to a USB peripheral mode. Additional items may include non-OTG peripherals such as a

Microchip Ex. 1012, p. 142
Microchip v. Aptiv
IPR2024-00496

Slave/Codec (Coder-Decoder) 116 that, in turn, is connected to a speaker 118 and a microphone 120 such as those that may be used in a hands-free telephone.

A block diagram of an example OTG hub 102 is illustrated in FIG. 2. The hub 102 includes a port switching device 200 that serves to physically switch signals between a plurality of A-type ports 202. Additionally, a B-type port 204 may be included and connected to the port switching device 200. This B-type port 204 is an override port to which the hub 102 always defers host control when a PC, for example, is connected thereto. In order to control the operation of the port switching device 200, a microcontroller 206 is provided to effect switching operation within the port switching device 200.

Also included within the hub 102 are a USB host controller 208 and a USB peripheral controller 210, both being connectable to the port switching device 200. The purpose of the USB host controller 208 is to effect host control when none of the devices connected to the A-ports 202 are assuming host control and a PC is not connected to the B-port 204. Thus, the USB host controller 208 enables the hub 102 to act as a host when no other devices, such as On-the-Go devices, in particular, are asserting host control. Similarly, the USB peripheral controller 210 is provided for those instances where either an external OTG device connected to one of the A-ports 202 or a PC connected to the B-port 204 have asserted host control and the hub 102 is required to appear as a device rather than a host in order to comply with the USB 2.0 specification.

In operation, when the hub 102 is first powered up the USB host controller 208 asserts host control by placing a voltage V_{bus} on the A-ports 202. Thus, the hub 102 acts as a host controller via the USB host controller 208 as illustrated in FIG. 3 by connection lines 300. The USB host controller 208 then determines which of the A-ports 202 have a corresponding external device connected thereto. In turn, the host controller 208 assigns addresses to each of the A-ports 202 having an external device connected thereto, effectively assigning addresses to those devices. Additionally, the host controller 208 will then enable a host negotiation protocol (HNP) feature on those external devices. It is noted that the hub 102 is not required to configure the devices since the hub 102 will not actually use the resources of those

Microchip Ex. 1012, p. 143
Microchip v. Aptiv
IPR2024-00496

devices. Additionally, the hub 102, either using the USB host controller 208 and/or the microcontroller 206, determines which of the external devices are host negotiation protocol (HNP) capable for use in differentiating between disconnects and requests for host control. Once initialization is complete, the hub 102 enters a state where it waits for one of the external OTG devices (not shown) to request host control of the USB bus. This state is shown as state 400 in the state diagram illustrated in FIG. 4.

When a device connected to one of the A-ports 202 desires to obtain host control, that specific device requests the bus by removing a pull-up resistor (not shown) from a data line D+ (i.e., one of the wires in the USB cable transmitting the USB protocol signals). After a device requests the USB bus, the hub 102 will transfer host control to that device in accordance with the host negotiation protocol (HNP) described in the OTG supplement to the USB 2.0 specification. The hub 102 will then internally reconfigure the port switching device 200 under the control of the microcontroller 206 such that an A-port 202 connected to the device requesting the bus is configured as the upstream port as illustrated in FIG. 5. As shown in this figure, the port switching device 200 configures one of the A-ports 202, labeled as 202_{Host}, to be directly connected to the remainder A-ports 202 and to the USB peripheral controller 210. After the hub 102 completes reconfiguration of the port switching device 200, the device connected to the A-port 202_{Host} is enabled to begin the process of generating USB bus traffic. Additionally, the device connected to the A-port 202_{Host} is allowed to enumerate the hub, i.e., assign specific addresses to the other ports, and, thus, to the external devices. After the device enumerates the hub 102, the device then enumerates the other devices in the system and, if appropriate, enables them for host negotiation protocol (HNP). It is noted that enabling the other devices for HNP depends on the operation of the host device. For example, in some cases enabling other devices for HNP will be restricted to when the host is idle and in other cases the host device may allow HNP to be performed while it is active, which will be discussed later. The above-described operation is represented in the state diagram of FIG. 4 as the transfer from state 400 to state 402 where the hub operates as an OTG hub based on a device requesting control through disconnect of its pull-up resistor from the USB data line D+.

Microchip Ex. 1012, p. 144
Microchip v. Aptiv
IPR2024-00496

Should another device connected to one of the other A-ports 202 desire to become the bus controller (assuming that it has been enabled by the present host), the hub 102 recognizes a signal from the device, which is initiated by the device disconnecting its pull-resistor from the USB data line D+. In particular, the hub 102 is configured to detect this signal and, in turn, report the occurrence of the request to the present host device. This is in accordance with standard USB 2.0 hub protocol. In response, the host device will then issue a command to the hub 102 commanding the hub 102 to switch the host control A-port 202 to the particular A-port to which the new host device is connected. The previous host device then stops generating bus traffic and replaces its pull-up resistor on the USB data line D+. This operation is also illustrated in the state diagram of FIG. 4, showing a change from state 402 to state 404 when a host control switch is requested. Further, the state changes from state 404 to state 402 as the new host device detaches its pull-up resistor to assume host control.

After the hub 102 detects that a current host has stopped generating traffic (e.g., based on five milliseconds of idleness) microcontroller 206 will reconfigure the port switching device 200 so as to designate the particular A-port 202 connected to the new host device as the host port. Additionally, the microcontroller 206 will configure the port switching device 200 to attach the USB peripheral controller 210 to that particular port. Then, as previously described, the new host device proceeds to enumerate the hub and the other devices.

When an OTG device desires to cease being the host device, the device can cease generating USB traffic and replace its pull-up resistor onto the USB data D+. This situation is illustrated in the state diagram of FIG. 4 showing movement from state 402 to state 400 where a device is indicated as attaching its pull-up resistor to release host control. When the hub 102 senses an extended idle state with no data, the hub 102 resumes its initial power-up operation as the default host of the system. As described previously, when this event occurs the USB host controller 208 is connected to the port switching device 200 under the control of the microcontroller 206 and the controller 208 proceeds to enumerate the hub 102 and host negotiation

Microchip Ex. 1012, p. 145
Microchip v. Aptiv
IPR2024-00496

protocol (HNP) enable all of the devices that are capable of such enablement, as described previously.

In a further example, the hub 102 may allow a personal computer 600 to be attached to a USB "B-type" port 204. In this situation, the hub 102 is configured to reconfigure the port switching device 200 such that the B-type port 204 is assigned as the host port and all of the other ports 202 are assigned to be downstream device ports as illustrated in FIG. 6. Each time of PC or similar device is connected to the B-type port, the hub 102 defers to host control by the PC, similar to an override Additionally, the USB peripheral controller 210 will remove its pull-up resistor if it was acting as an On-the-Go hub and attach to the B-port 204. As illustrated in the state diagram of FIG. 4, when a PC is attached during either of states 400 or 402, the system state moves to state 406 where the hub 102 operates as a standard USB hub. Removal of the pull-up resistor of the peripheral controller 210 also signals to any OTG device that was presently acting as a host (in the case of state 402 in FIG. 4) that the hub 102 has regained control of the USB bus as well as signaling to the personal computer 600 that the hub 102 is attached to the B-port 204. Once host control is transferred to the personal computer 600, the personal computer proceeds to enumerate the hub 102 and the other devices connected to ports 202 according to normal, non-OTG USB protocol.

The overall operation 102 of the previously-described hub is illustrated by the flow diagrams of FIGs. 7, 8 and 9. As shown in FIG. 7, the hub 102 is initialized during a power up start (block 700). Next, the microcontroller 206 within the hub determines whether a connection exists on the B-port (block 702). If a connection exists on the B-port, the microcontroller 206 within the hub 102 configures the port switching device 200 as a standard USB hub where the B-port is the upstream port (block 704). Alternatively, if no connection exists on the B-port, the microcontroller 206 configures the hub 102 for default host operation and asserts V_{bus} to supply power to the ports 202 (block 706). The hub then initializes a counter to a first port 1 of the A-type ports 202 (block 708).

Once the counter is initialized, the hub 102 proceeds to power the port to which the internal counter is currently set (block 710). Next, the hub determines

Microchip Ex. 1012, p. 146
Microchip v. Aptiv
IPR2024-00496

whether a device is attached to the current port (block 712). If no device is attached to the port (i.e., port 1) the counter is then incremented to the next A-type port (block 714) (i.e., port 2). Alternatively, if a device is attached to the port currently under consideration, the hub sets an address on the device attached to the port (block 716). Next, the hub 102 determines whether the device connected to the port 202 is On-the-Go capable (block 718). If the device is determined as not being OTG capable, the counter is incremented to the next numbered port (block 714). Alternatively, if the device has been determined as being OTG capable, the hub 102 enables the particular device connected to the port 202 for host negotiation protocol (block 720). After the device has been HNP enabled, the counter is incremented to the next numbered port of the plurality of ports 202 in the hub 102 (block 714).

The example procedure illustrated in FIG. 7 proceeds to make the enumeration operations performed in blocks 710-720 until all the ports have had opportunity to be enumerated (block 722). Once all port enumerations have been completed the hub 102 suspends the USB bus (block 724). Additionally, the hub 102 is configured to generate an interrupt upon disconnection of any of the devices connected to the A-ports 202. As described previously, the hub 102 stops all USB activity when this occurs. It is also noted that this is a part of the host negotiation protocol. Thus, the hub 102 continues to monitor whether at least one of the A-ports 202 change state to a disconnect of a device pull-up resistor (block 726). If no change is detected, the hub 102 continues to suspend the bus. Alternatively, if a change is detected, the flow proceeds to block B, which is continued in FIG. 8.

One continuation of the procedure of FIG. 7 illustrated in FIG. 8 is an example where the hub 102 is configured as a peripheral device (this corresponds to state 402 as illustrated in FIG. 4). Furthermore, the example of FIG. 8 illustrates a configuration where the hub is compliant with the USB OTG supplement to the USB 2.0 specification. According to this example, after an A-port has changed to disconnect (i.e., the pull-up resistor has been disconnected) the hub 102 determines which of the A-ports 202 has changed state (block 728). Next, the hub 102 activates a hub peripheral function, which is accomplished by connecting the USB peripheral controller 210 (block 730). The hub 102 configures the A-port 202 that has been

Microchip Ex. 1012, p. 147
Microchip v. Aptiv
IPR2024-00496

determined as requesting host control as the upstream port (block 732), such as by reconfiguring the switching device 200. The hub 102 applies a pull-up resistance to that port while leaving all other ports as downstream ports. It is noted also that this is a further step of the host negotiation protocol.

Once the hub 102 has been reconfigured to accommodate one of the A-type ports 202 as an upstream port, the hub 102 detects whether there is activity on the USB bus within a predetermined timeout period (block 734). As shown in the example of FIG. 8, this timeout period is approximately five milliseconds. This timeout period, however, is arbitrary, but is preferably set to a value greater than three milliseconds. If no bus activity occurs within the predetermined timeout period the hub 102 removes the pull-up resistance and reconfigures all of the A-type ports 202 as downstream ports (block 736). Alternatively, if bus activity occurs on the upstream port, the hub 102 continues to act in the peripheral state and waits for suspension of bus activity (block 738). That is, the hub 102 performs normal hub processing as a peripheral device as described in the USB 2.0 specification until bus suspension. Furthermore, the hub 102 indicates that it is OTG capable if queried and any detach activity is only reported to the active DRD OTG host. Afterwards, the hub 102 detects whether the bus is suspended (block 740). If the bus is not suspended, the process continues to wait for a suspend. Otherwise, when the bus is suspended, the hub 102 removes the pull-up resistance and reconfigures all A-ports as downstream ports (block 736). Flow then returns to block A, which returns flow to block 706 in FIG. 7 where the hub 102 once again configures for host operation (block 706).

An alternate example of a continuation of the process in FIG. 7 is illustrated in FIG. 9 showing a procedure when the hub 102 is configured as a peripheral device, but is not compliant with the OTG supplement to the USB 2.0 specification. Similar to the portion of the procedure described in blocks 728, 730, 732, 734, 736, 738 and 740 of FIG. 8, the procedure shown in FIG. 9 implements this same procedure. However, after the microcontroller 206 checks whether the USB bus is suspended (block 740) the procedure of FIG. 9 differs from that illustrated in FIG. 8. In particular, if the bus is not suspended, the hub 102 checks whether a port disconnect has been detected (block 742). If no port disconnect is detected, the

Microchip Ex. 1012, p. 148
Microchip v. Aptiv
IPR2024-00496

procedure returns to wait for bus suspension (block 738). On the other hand, if a port disconnect is detected, the hub 102 then reports the disconnect to the current active host (block 744). After reporting the disconnect to the active host, the hub 102 checks whether host negotiation protocol is enabled. This determination may be based on hub "snooping packets" sent by the microcontroller 206 to the ports 202. The microcontroller 206 then watches for a host negotiation protocol enabled message. If host negotiation protocol is not enabled, the hub 102 then continues to wait for bus suspension (i.e., return from block, 746 to block 738). If, however, host negotiation protocol is enabled, the microcontroller 206 will then direct the port switching device 200 to be configured such that the device requesting host control is configured as the upstream port as indicated by flow from block 746 to block 732 in FIG. 9. Afterward, the procedure repeats until either bus activity is idle as determined in block 734 or the bus is suspended as determined in block 740 whereupon flow proceeds to block 736 where the microcontroller 206 configures all the A-type ports 202 as downstream ports and flow reverts back to block 706 shown in FIG. 7.

Turning to FIG. 10, this drawing shows an example schematic for a hub 800 constructed in accordance with the teachings of the present invention having six A-type ports 802 as well as a B-type port 804. As may be seen in FIG. 8, these ports may be designated as port 0 through port 6 where port 0 is the B-type port and ports 1-6 are the A-type ports 802. It is further noted that each of the port types 802, 804 contain a receive (RX) buffer 806 and a transmit (TX) buffer 808. Each of the receive buffers 806 are connected to another set of corresponding RX buffers 810, which deliver the received signals to a respective plurality of switch pairs 812 (except for the signal from the B-type port which is delivered to a single, inverting switch 814). Each of the pairs of switches 812 includes a non-inverting switch and an inverting switch (meaning that the switch is turned on when a high voltage is applied form the non-inverting switch, whereas a low voltage applied to the inverting switch causes the inverting switch to turn on). Thus, given a discrete input of either high or low voltage, switch pairs 812 alternately turn on dependent on the input voltage. Switching of the switch pairs 812 and switch 814 is controlled by a port switching control 816.

Microchip Ex. 1012, p. 149
Microchip v. Aptiv
IPR2024-00496

The outputs of the inverting type switches of the switch pairs 812 and switch 814 are connected to an upstream receive bus 818 whereas the outputs of the non-inverting switches of the switch pairs 812 are delivered to respective downstream receive buses RX1 through RX6. Each of these receive buses RX1 through RX6 are input to a multiplexer 820, which is controlled by a collision detection and controller 822. The collision detection and controller 822 detects collisions occurring between received signals and selectively arbitrates between these signals thereby controlling the output of the multiplexer 820.

The upstream receive bus 818 is connected through a buffer 824 to a plurality of downstream transmit lines TX1 through TX6. The output of the multiplexer 820 is, in turn, connected to an upstream transmit bus 826. Connected to the downstream transmit lines TX1-TX6 are non-inverting switches of a plurality of switch pairs 828, which each also include an inverting switch. Each of the inverting switches of the switch pairs 828 is connected to the upstream transmit bus 826. Switching control for the switch pairs 828 is also performed by the port switching control 816. It is noted that the control voltages delivered to the switch pairs 828 are the same as those delivered to corresponding switch pairs 812. Furthermore, the correspondence between each of the switch pairs 812 and 828 is dependent on a particular one of the ports. For example, a switch pair 812 connected to the receive buffer 806 of port 1 receives the same control voltage as the switch pair 828 that is connected to the transmit buffer 808 of the same port 1.

Also connected to the upstream transmit bus 826 is an inverting switch 830, which is controlled by the same control voltage from port switching control 816 as inverting switch 814. The outputs of each of the switch pairs 828 and switch 830 are connected via a plurality of respective buffers 832 to corresponding transmit buffers 808 of the ports 802 and 804. This structure illustrated in FIG. 10 affords selective switching for either designating the B-type port 804 as the upstream port or selectively assigning one of the A-type ports 802 as the upstream port. Examples of how this disclosed structure achieves this function will be described in connection with FIGs. 11-12.

Microchip Ex. 1012, p. 150
Microchip v. Aptiv
IPR2024-00496

The example of FIG. 11 illustrates the case where a PC (not shown), for example, is connected to the B-port 804 (i.e., port 0). Thus, in this example the hub 800 is configured to behave like a standard USB hub similar to the example of FIG. 5. In this configuration, the port switching control 816 is configured to output a low voltage to the port 0 path switches 814 and 830, whereas all of the remaining control signals from the port switching control 816 to the switch pairs 812 and 828 are high voltage. Thus, the upstream port 0 is connected to the upstream receive bus 818 and the transmit buffer 808 of port 0 is connected to the output of multiplexer 820.

As illustrated in FIG. 11 a signal received on B-type port 0 follows a particular receive path (indicated with a dashed line). Data received from this upstream port 0 is directly transmitted to the transmit buffers 808 of ports 1 through 6 via buffer 824 and the downstream transmit lines TX1 through TX6. Because the data received from the upstream B-type port is broadcast to all of the downstream ports 802, this configuration is in accordance with the USB 2.0 specification.

Also illustrated in FIG. 11 is the transmit path for signals sent to the transmit buffer 808 of the B-type port 0 (indicated with a solid, bolded line). In this particular example, the downstream port 802 labeled "port 4" is shown sending data to the upstream port "port 0". Thus, a signal received by the receive buffer 806 of port 4 is shown routed to a switch pair 902 corresponding to port 4. Since the port switching control 816 asserts a high signal, a non-inverting switch 904 of the pair 902 turns on while an inverting switch 906 is turned off. Hence, the signal is routed to downstream receive line RX4, which is connected to multiplexer 820. As described previously, the multiplexer 820 arbitrates between the downstream receive lines under the direction of control 822. The output of the multiplexer 820 is connected to the upstream transmit bus 826. As shown in FIG. 11, the signal from port 4 is delivered to receive buffer 808 of port 0 via inverting switch 830 and buffer 832.

FIG. 12 illustrates an example of the hub 800 configured to be On-the-Go compatible. In this example, an A-type port 802 (e.g., port 3) is selected as the host port by the port switching control 816. This selection is effected by asserting high signals on all of the outputs of the port switching control 816 except for the input to the port 3 switch pairs 1002 and 1004, which receive a low signal. As a result, a

Microchip Ex. 1012, p. 151
Microchip v. Aptiv
IPR2024-00496

signal received by the receive buffer 806 of the upstream port 3 is broadcast to the remaining ports 1, 2 and 4-6 as indicated by the dashed line in FIG. 12. It is also noted that since the example of FIG. 12 illustrates a USB On-the-Go hub, the signal can not be transmitted to the B port 804.

Additionally, the example of FIG. 12 illustrates when a device connected to port 1, for example, sends a signal to the host port 3 via hub 800 (i.e., from the receive buffer 806 of port 1 to the transmit buffer 808 of port 3). Here, the signal path is illustrated by a solid bold line from port 1 to port 3 via buffer 810, the non-inverting switch of switch pair 1006, multiplexer 820, the inverting switch of switch pair 1004 to the transmit buffer 808 of port 3. The selection of the particular signal from port 1 is accomplished by the collision detection and control 822, thereby allowing the signal to pass to the upstream transmit bus 826. It is also noted that this is in accordance with the USB 2.0 specification.

In another example, FIG. 13 illustrates an example where any number of m+1 ports may be utilized in a USB OTG compatible hub 1100. As shown, a B-type port 1102 labeled port 0 is included as well as an "m" number of A-type ports 1104, which are labeled as ports 1 through "m". Similar to the previous examples of FIGs. 10-12, the hub 1100 includes a port switching control 1106 that generates control signals to configure the ports as either upstream or downstream based on which particular port is granted host control. Only one port is configured as the upstream port at any point in time. Thus, the port 1104 with host control is configured as the upstream port whereas all other A-type ports 1104 are configured as downstream ports. As with the previous examples, if a personal computer is attached at any time to the B-port 1102 (this B-type port 1102 being optional), the B-type port 1102 is enabled (like an override), configured as the upstream port and is given host control. When any of the A-type ports 1104 have host control and no personal computer is attached to the B-type port 1102, this port is disabled

Broadly, the port switching control 1106 function asserts the output control line corresponding to the upstream port and D-asserts (i.e., provides a high signal) for the control lines corresponding to the downstream ports. These control signals turn on and off signal paths between the various ports such that the hub 1100

Microchip Ex. 1012, p. 152
Microchip v. Aptiv
IPR2024-00496

is properly configured for operation according to the USB 2.0 specification. That is, the port configured as the upstream port behaves like a standard upstream port and the ports configured as the downstream ports behave like standard downstream ports as defined in USB 2.0 specification.

Although certain apparatus and methods constructed in accordance with the teachings of the invention have been described herein, coverage of this patent is not limited thereto. On the contrary, this patent covers all embodiments of the teachings of the invention falling fairly within the scope of the appended claims, either literally or under the doctrine of equivalents.

Microchip Ex. 1012, p. 153
Microchip v. Aptiv
IPR2024-00496

What is claimed is:

1. A Universal Serial Bus hub apparatus comprising:

a plurality of ports configured to connect the hub device to one or more external devices;

a controller device; and

a port switching device controlled by the controller device for selectively connecting one of the plurality of ports to serve as a host port and the other ones of the plurality of ports to serve as device ports.

2. The apparatus according to claim 1, wherein each of the plurality of ports comprises an A-type of Universal Serial Bus port.

3. The apparatus according to claim 2, further comprising:

an override port comprising a B-type of Universal Serial Bus port allowing connection of a personal computer to obtain host control.

4. The apparatus according to claim 1 further comprising:

a collision detector and control device configured to detect signal collisions occurring between signals received by the plurality of ports acting as device ports from the external devices that are being transmitted to the host port and mitigate the collisions by selectively switching a multiplexing circuit.

5. The apparatus according to claim 1, wherein the controller detects when the port acting as host port is idle for a predetermined period and controls the port switching device to connect the hub apparatus as a host control.

6. The apparatus according to claim 1, wherein the controller comprises a microcontroller, a USB host controller and a USB peripheral controller.

Microchip Ex. 1012, p. 154
Microchip v. Aptiv
IPR2024-00496

7. The apparatus according to claim 6, wherein the microcontroller is configured to communicatively connect the USB host controller to the port switching device during a start-up of the hub apparatus.

8. The apparatus according to claim 7, wherein the microcontroller is configured to detect when a request by an external device to act as host control is received via one of the plurality of ports to which the external device is attached and control the switching device to reconfigure the switching device such that all other ports of the plurality ports are device ports in response to the detection of the request.

9. The apparatus according to claim 8, wherein the microcontroller is configured to connect the USB peripheral controller port acting as host port is idle for a predetermined period and controls the port switching device to connect the hub apparatus as a host control.

10. The apparatus according to claim 1 wherein the hub is configured to operate according to the On-the-Go supplement to the USB 2.0 specification and the ports are configured to be connectable to On-the-Go dual-role devices.

11. The apparatus according to claim 1, wherein the controller is configured to assume host control during the occurrence at least one of start up of the hub, idleness of a current host device and transfer of host control between two peripheral devices.

12. A USB communication system comprising:

one or more dual-role peripheral devices; and

a hub comprising:

a plurality of ports configured to connect the hub device to the one or more peripheral devices;

a controller device; and

a port switching device controlled by the controller device for selectively connecting one of the plurality of ports to serve as a host port allowing a

Microchip Ex. 1012, p. 155
Microchip v. Aptiv
IPR2024-00496

dual-role peripheral of the one or more dual-role peripheral device to assume host control and the other ones of the plurality of ports to serve as device ports.

13. The system according to claim 12, wherein each of the plurality of ports comprises an A-type of Universal Serial Bus port.

14. The system according to claim 13, further comprising:

an override port comprising a B-type of Universal Serial Bus port allowing connection of a personal computer to obtain host control.

15. The system according to claim 12 further comprising:

a collision detector and control device configured to detect signal collisions occurring between signals received by the plurality of ports acting as device ports from the external devices that are being transmitted to the host port and mitigate the collisions by selectively switching a multiplexing circuit.

16. The system according to claim 12, wherein the controller detects when the port acting as host port is idle for a predetermined period and controls the port switching device to connect the hub apparatus as a host control.

17. The system according to claim 12, wherein the controller comprises a microcontroller, a USB host controller and a USB peripheral controller.

18. The system according to claim 17, wherein the microcontroller is configured to communicatively connect the USB host controller to the port switching device during a start-up of the hub apparatus.

19. The system according to claim 18, wherein the microcontroller is configured to detect when a request by an external device to act as host control is received via one of the plurality of ports to which the external device is attached and control the switching device to reconfigure the switching device such that all other ports of the plurality ports are device ports in response to the detection of the request.

Microchip Ex. 1012, p. 156
Microchip v. Aptiv
IPR2024-00496

20. The system according to claim 19, wherein the microcontroller is configured to connect the USB peripheral controller port acting as host port is idle for a predetermined period and controls the port switching device to connect the hub apparatus as a host control.

21. The system according to claim 12 wherein the hub is configured to operate according to the On-the-Go supplement to the USB 2.0 specification and the ports are configured to be connectable to On-the-Go dual-role devices.

22. The system according to claim 12, wherein the controller is configured to assume host control during the occurrence at least one of start up of the hub, idleness of a current host device and transfer of host control between two peripheral devices.

23. A method of operating a USB hub having a plurality of ports and a hub controller for controlling routing of the ports, the method comprising:

operating the hub as a host device having host control during a start-up period;

determining using the hub controller which of the plurality of ports are connected to corresponding external devices and assigning addresses to those devices;

enabling a host negotiation protocol on the external devices; and

transferring host control from the hub to a first external device connected to a first port of the plurality of ports when a request for host control is received by the hub controller from the first external device via the first port.

24. The method according to claim 23 further comprising:

transferring host control back to the hub controller from the first external device after an external device to which host control was transferred no longer requests host control according to a predetermined condition.

Microchip Ex. 1012, p. 157
Microchip v. Aptiv
IPR2024-00496

25. The method according to claim 24, wherein the predetermined condition comprises when no communication occurs on the port to which the first external device is connected indicating that the first external device is idle.

26. The method according to claim 24, wherein the predetermined condition comprises when a signal from the first external device is received by the hub indicating that the external device no longer requests host control.

27. The method according to claim 23, further comprising:

transferring host control to a second external device connected to a second port of the plurality of ports when a signal requesting host control is received by the hub via the second port from the second external device.

28. The method according to claim 23, further comprising:

transferring host control to an override port of the plurality of ports when a personal computer is connected to the override port.

Microchip Ex. 1012, p. 158
Microchip v. Aptiv
IPR2024-00496

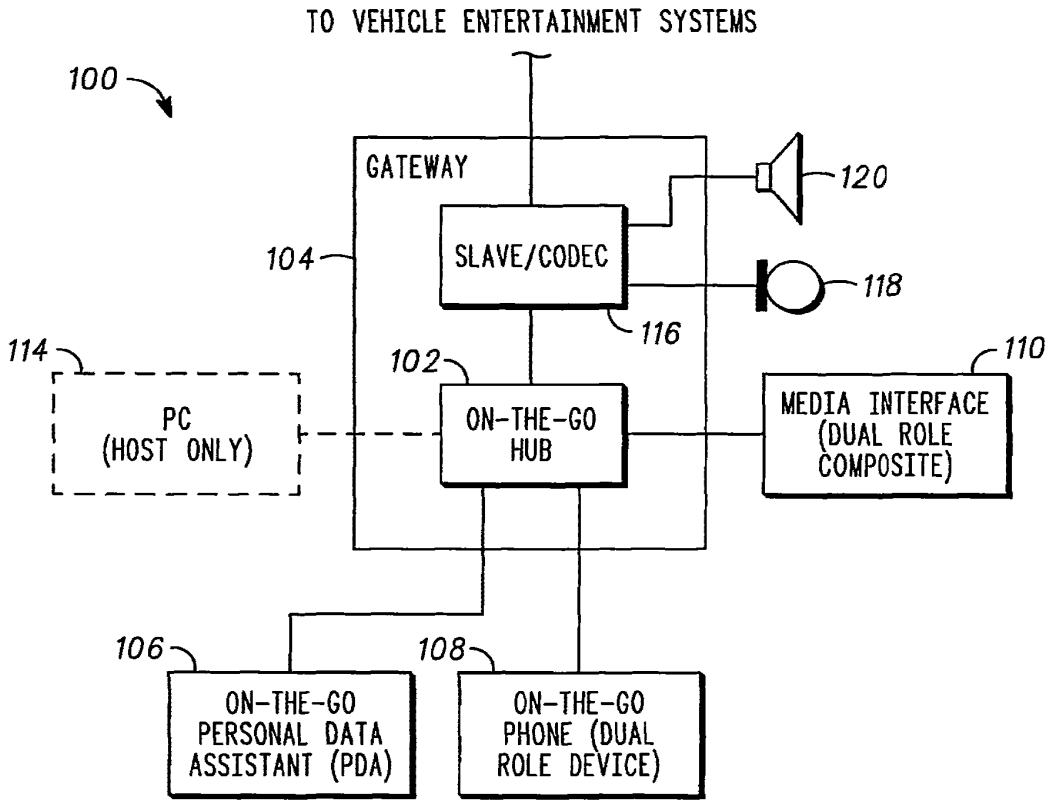
TO VEHICLE ENTERTAINMENT SYSTEMS
100
GATEWAY
104
SLAVE/CODEC
116
120
118
114
PC
(HOST ONLY)
102
ON-THE-GO
HUB
110
MEDIA INTERFACE
(DUAL ROLE
COMPOSITE)
106
ON-THE-GO
PERSONAL DATA
ASSISTANT (PDA)
108
ON-THE-GO
PHONE (DUAL
ROLE DEVICE)

FIG. 1

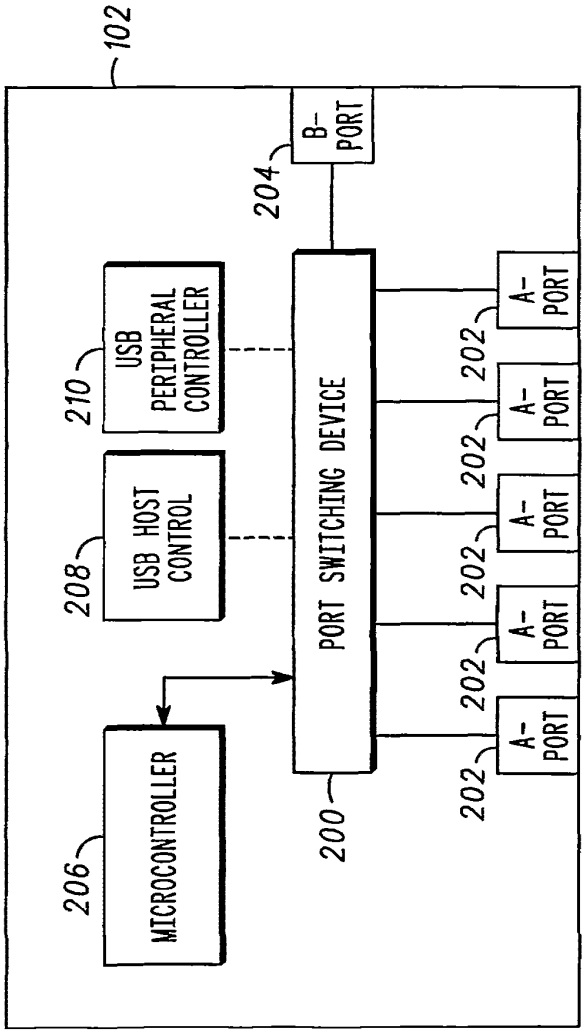
102
B-PORT
204
USB PERIPHERAL CONTROLLER
210
USB HOST CONTROL
208
MICROCONTROLLER
206
PORT SWITCHING DEVICE
200
A-PORT
202
A-PORT
202
A-PORT
202
A-PORT
202
A-PORT
202

FIG. 2

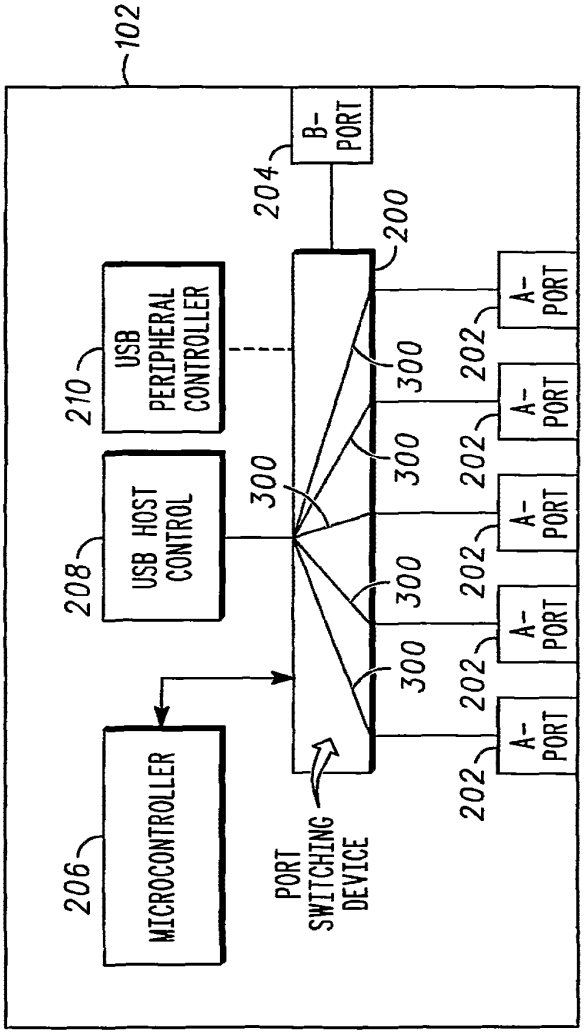
102
B-PORT
204
200
USB PERIPHERAL CONTROLLER
210
USB HOST CONTROL
208
300
300
300
300
300
MICROCONTROLLER
206
PORT SWITCHING DEVICE
A-PORT
A-PORT
A-PORT
A-PORT
A-PORT
202
202
202
202
202

FIG. 3

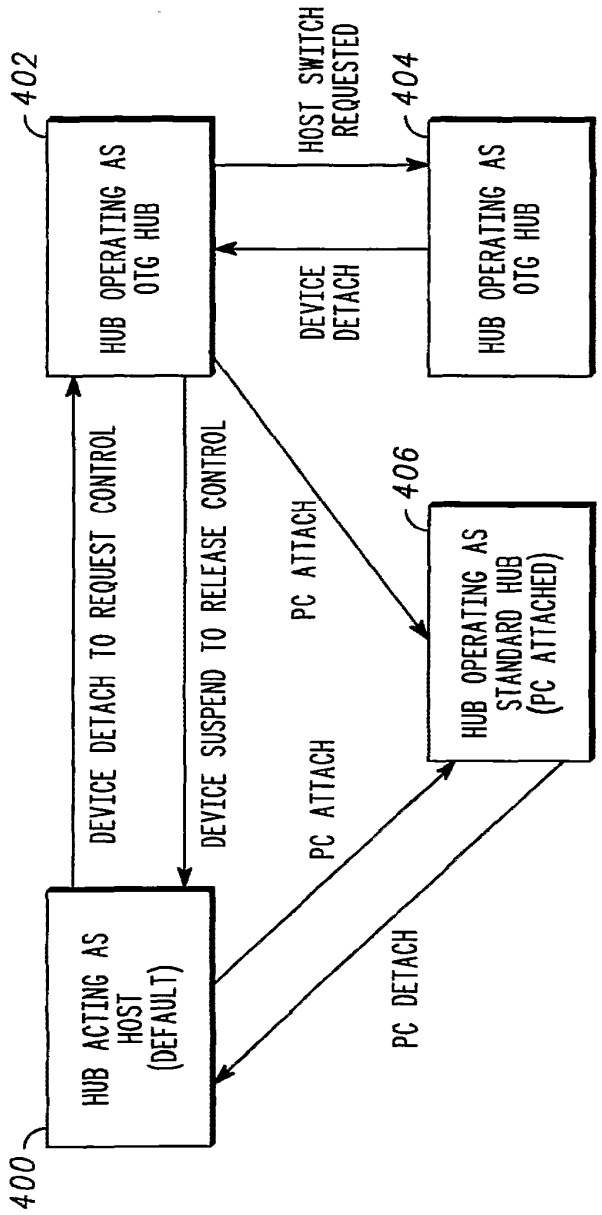
400
HUB ACTING AS HOST (DEFAULT)
402
HUB OPERATING AS OTG HUB
404
HUB OPERATING AS OTG HUB
406
HUB OPERATING AS STANDARD HUB (PC ATTACHED)
DEVICE DETACH TO REQUEST CONTROL
DEVICE SUSPEND TO RELEASE CONTROL
HOST SWITCH REQUESTED
DEVICE DETACH
PC ATTACH
PC ATTACH
PC DETACH

FIG. 4

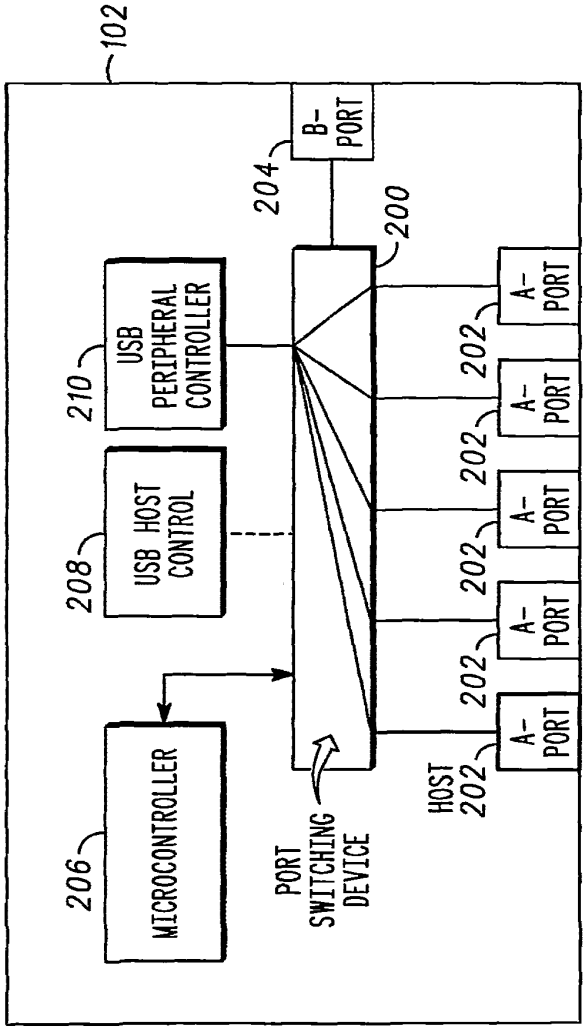
102
B-PORT
204
200
USB PERIPHERAL CONTROLLER
210
USB HOST CONTROL
208
MICROCONTROLLER
206
PORT SWITCHING DEVICE
A-PORT
202
HOST 202

FIG. 5

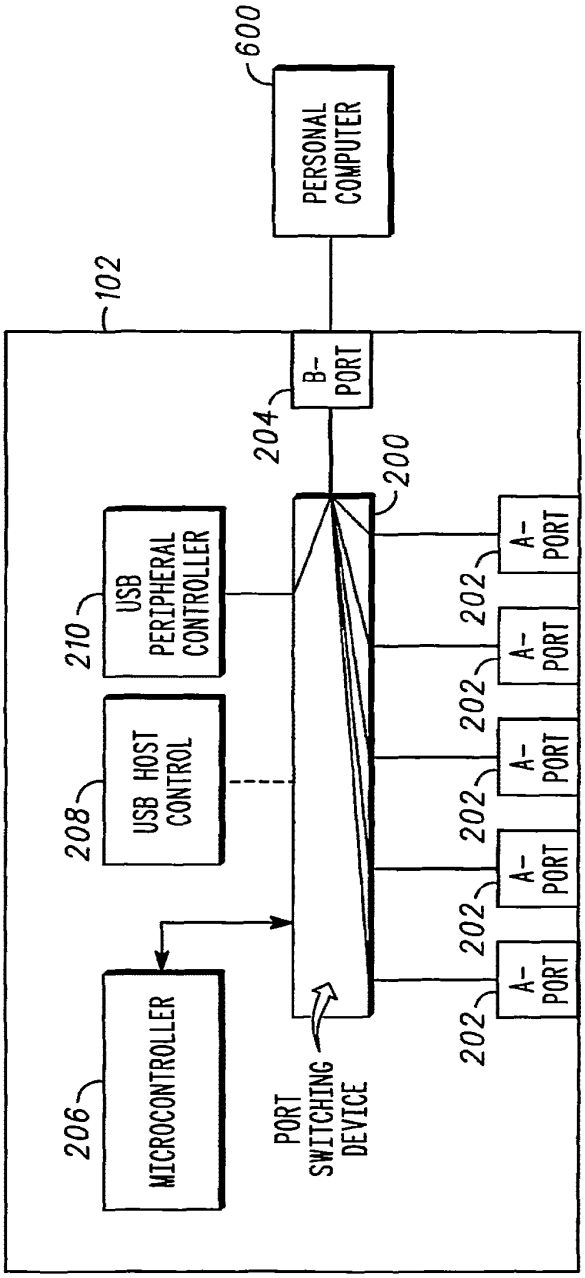
600
PERSONAL COMPUTER
102
B-PORT
204
200
USB PERIPHERAL CONTROLLER
210
USB HOST CONTROL
208
MICROCONTROLLER
206
PORT SWITCHING DEVICE
A-PORT
202
A-PORT
202
A-PORT
202
A-PORT
202
A-PORT
202

FIG. 6

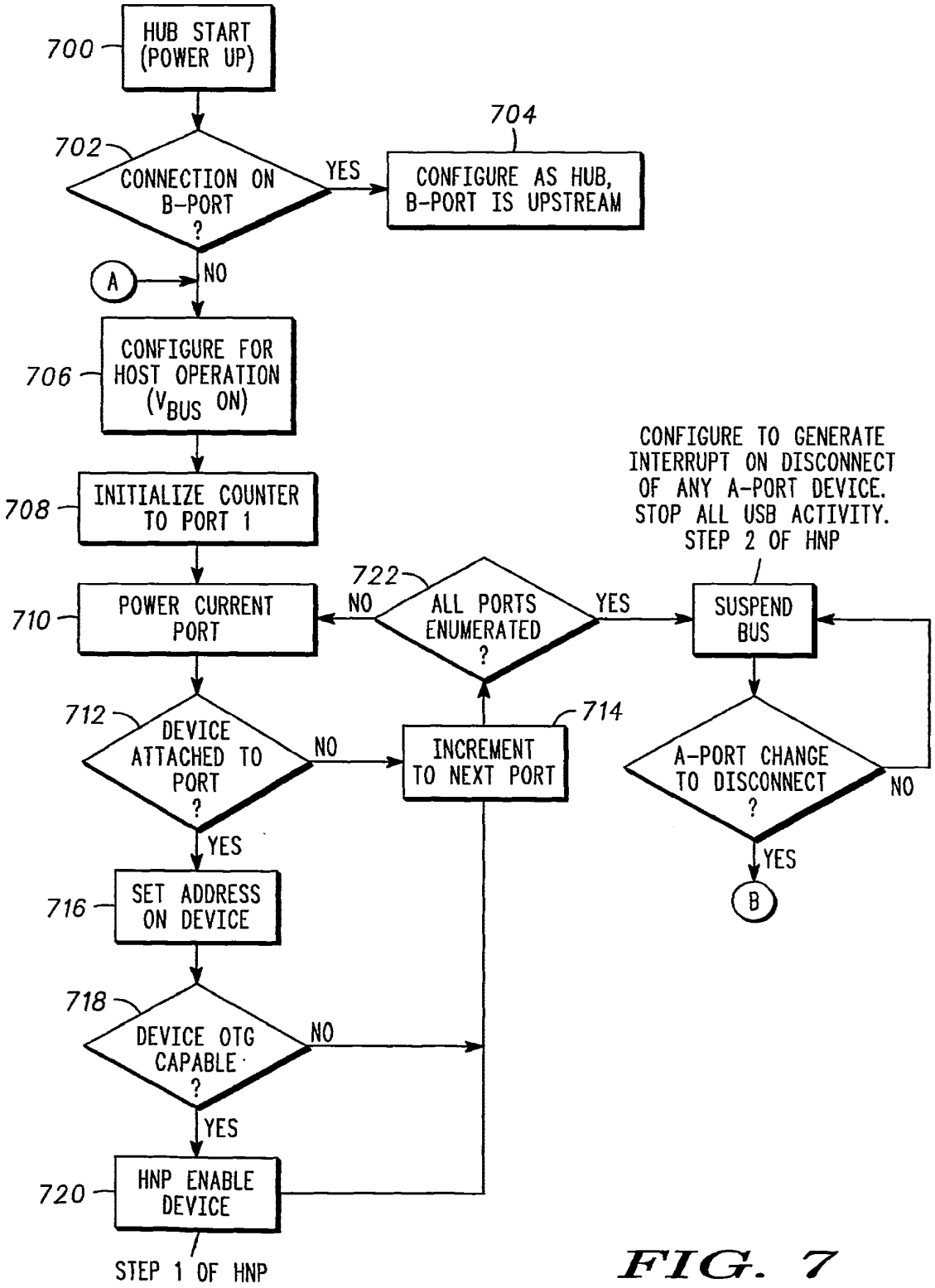
700
HUB START (POWER UP)
702
CONNECTION ON B-PORT ?
YES
704
CONFIGURE AS HUB, B-PORT IS UPSTREAM
A
NO
706
CONFIGURE FOR HOST OPERATION (V_{BUS} ON)
708
INITIALIZE COUNTER TO PORT 1
710
POWER CURRENT PORT
722
ALL PORTS ENUMERATED ?
NO
YES
CONFIGURE TO GENERATE INTERRUPT ON DISCONNECT OF ANY A-PORT DEVICE. STOP ALL USB ACTIVITY. STEP 2 OF HNP
SUSPEND BUS
712
DEVICE ATTACHED TO PORT ?
NO
714
INCREMENT TO NEXT PORT
A-PORT CHANGE TO DISCONNECT ?
NO
YES
B
YES
716
SET ADDRESS ON DEVICE
718
DEVICE OTG CAPABLE ?
NO
YES
720
HNP ENABLE DEVICE
STEP 1 OF HNP

FIG. 7

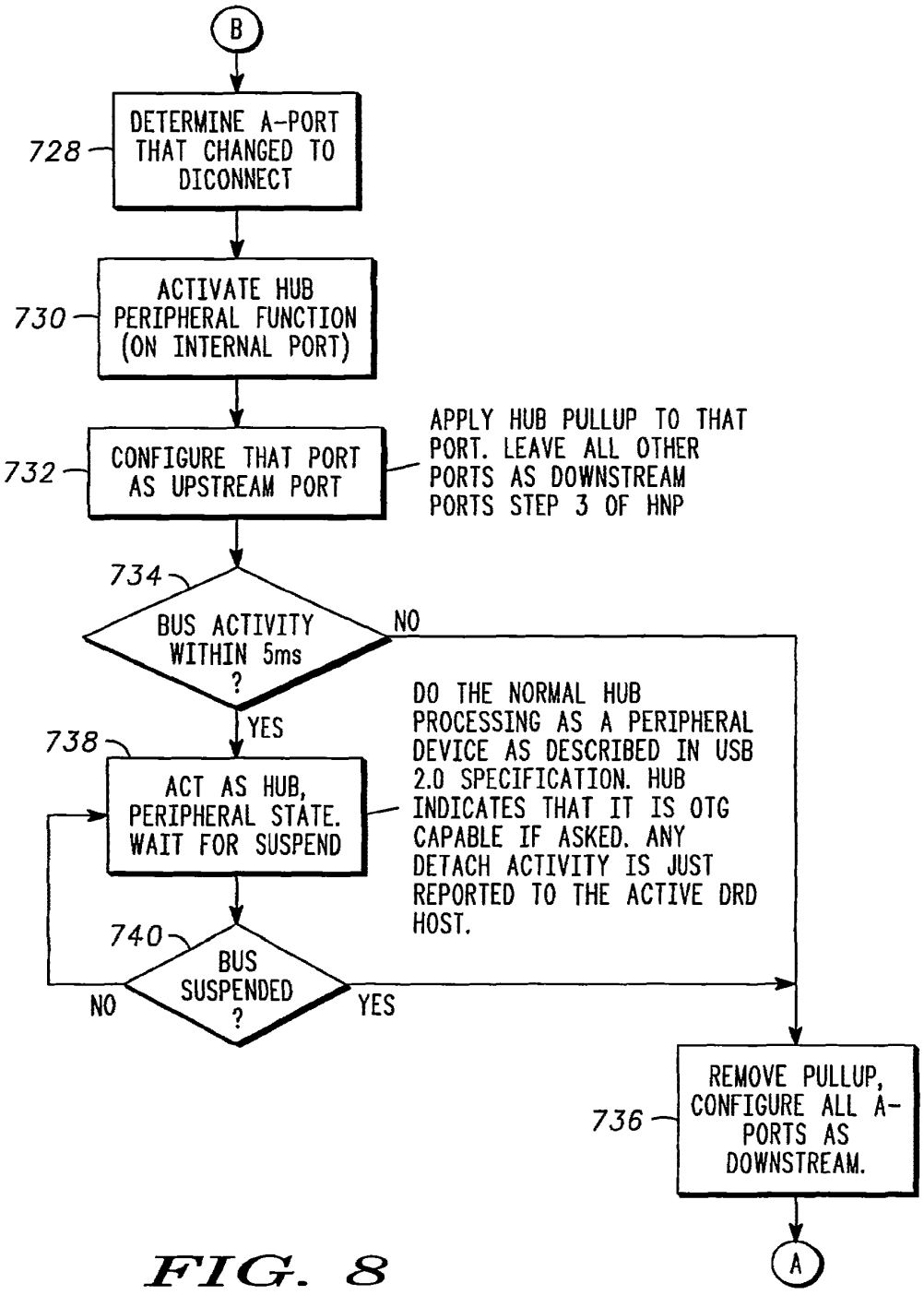
B
728
DETERMINE A-PORT THAT CHANGED TO DICONNECT
730
ACTIVATE HUB PERIPHERAL FUNCTION (ON INTERNAL PORT)
732
CONFIGURE THAT PORT AS UPSTREAM PORT
APPLY HUB PULLUP TO THAT PORT. LEAVE ALL OTHER PORTS AS DOWNSTREAM PORTS STEP 3 OF HNP
734
BUS ACTIVITY WITHIN 5ms ?
NO
YES
738
ACT AS HUB, PERIPHERAL STATE. WAIT FOR SUSPEND
DO THE NORMAL HUB PROCESSING AS A PERIPHERAL DEVICE AS DESCRIBED IN USB 2.0 SPECIFICATION. HUB INDICATES THAT IT IS OTG CAPABLE IF ASKED. ANY DETACH ACTIVITY IS JUST REPORTED TO THE ACTIVE DRD HOST.
740
BUS SUSPENDED ?
NO
YES
736
REMOVE PULLUP, CONFIGURE ALL A-PORTS AS DOWNSTREAM.
A

FIG. 8

FIG. 9

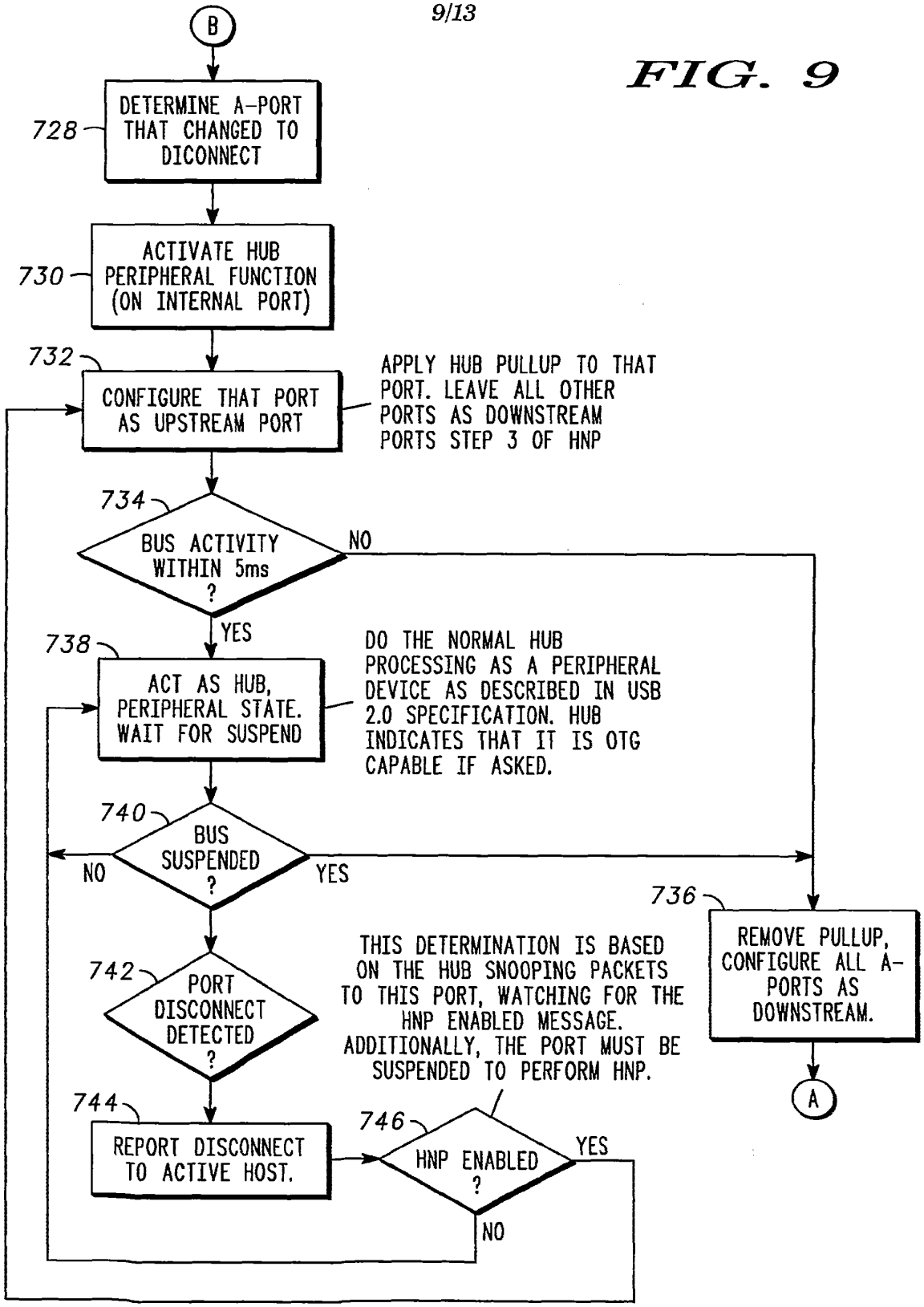
B
728
DETERMINE A-PORT THAT CHANGED TO DICONNECT
730
ACTIVATE HUB PERIPHERAL FUNCTION (ON INTERNAL PORT)
732
CONFIGURE THAT PORT AS UPSTREAM PORT
APPLY HUB PULLUP TO THAT PORT. LEAVE ALL OTHER PORTS AS DOWNSTREAM PORTS STEP 3 OF HNP
734
BUS ACTIVITY WITHIN 5ms ?
NO
YES
738
ACT AS HUB, PERIPHERAL STATE. WAIT FOR SUSPEND
DO THE NORMAL HUB PROCESSING AS A PERIPHERAL DEVICE AS DESCRIBED IN USB 2.0 SPECIFICATION. HUB INDICATES THAT IT IS OTG CAPABLE IF ASKED.
740
BUS SUSPENDED ?
NO
YES
736
REMOVE PULLUP, CONFIGURE ALL A-PORTS AS DOWNSTREAM.
A
742
PORT DISCONNECT DETECTED ?
THIS DETERMINATION IS BASED ON THE HUB SNOOPING PACKETS TO THIS PORT, WATCHING FOR THE HNP ENABLED MESSAGE. ADDITIONALLY, THE PORT MUST BE SUSPENDED TO PERFORM HNP.
744
REPORT DISCONNECT TO ACTIVE HOST.
746
HNP ENABLED ?
YES
NO

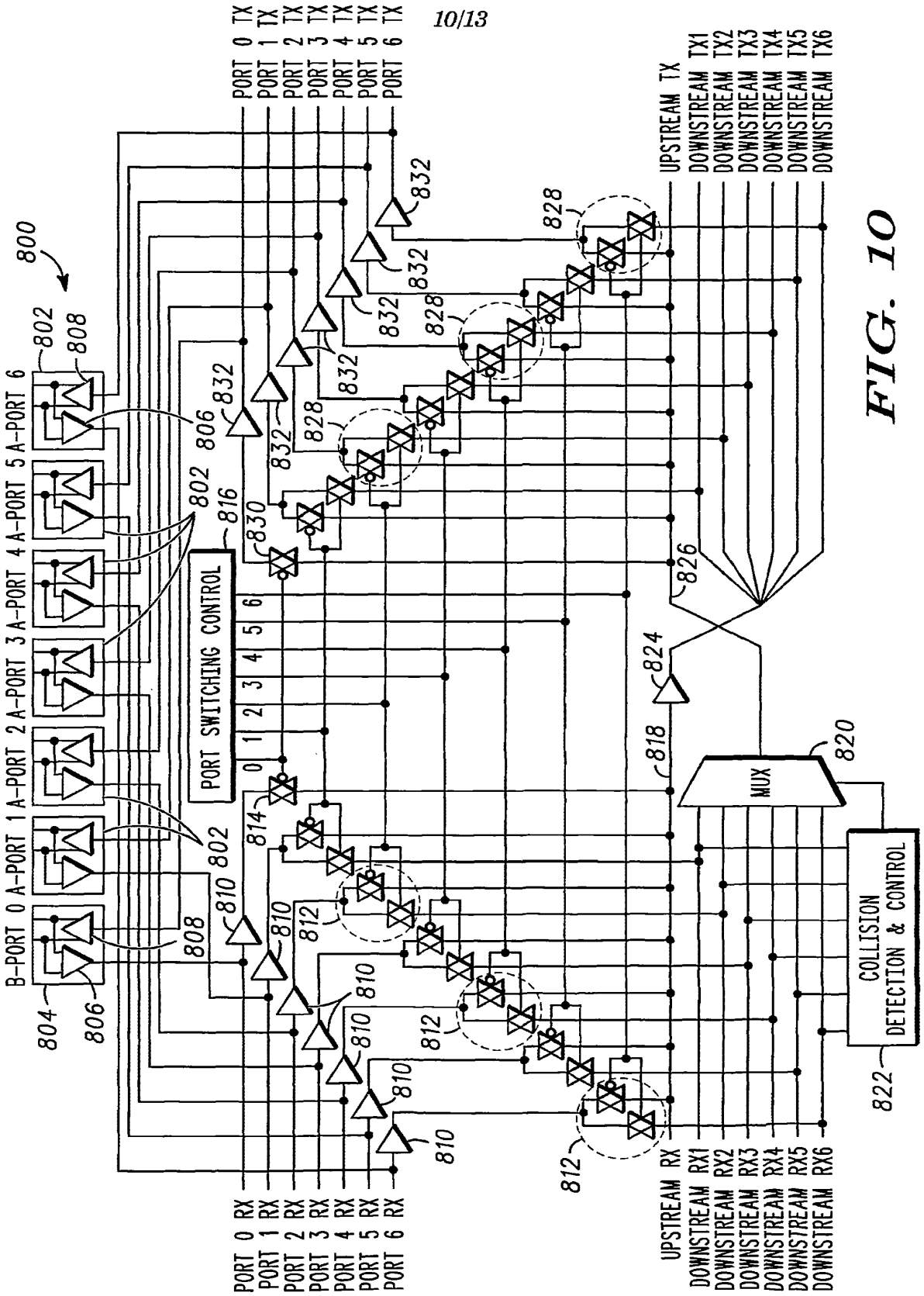
800
B-PORT 0
A-PORT 1
A-PORT 2
A-PORT 3
A-PORT 4
A-PORT 5
A-PORT 6
PORT SWITCHING CONTROL
0 1 2 3 4 5 6
MUX
COLLISION DETECTION & CONTROL
PORT 0 TX
PORT 1 TX
PORT 2 TX
PORT 3 TX
PORT 4 TX
PORT 5 TX
PORT 6 TX
PORT 0 RX
PORT 1 RX
PORT 2 RX
PORT 3 RX
PORT 4 RX
PORT 5 RX
PORT 6 RX
UPSTREAM TX
DOWNSTREAM TX1
DOWNSTREAM TX2
DOWNSTREAM TX3
DOWNSTREAM TX4
DOWNSTREAM TX5
DOWNSTREAM TX6
UPSTREAM RX
DOWNSTREAM RX1
DOWNSTREAM RX2
DOWNSTREAM RX3
DOWNSTREAM RX4
DOWNSTREAM RX5
DOWNSTREAM RX6
802
804
806
808
810
812
814
816
818
820
822
824
826
828
830
832

FIG. 10

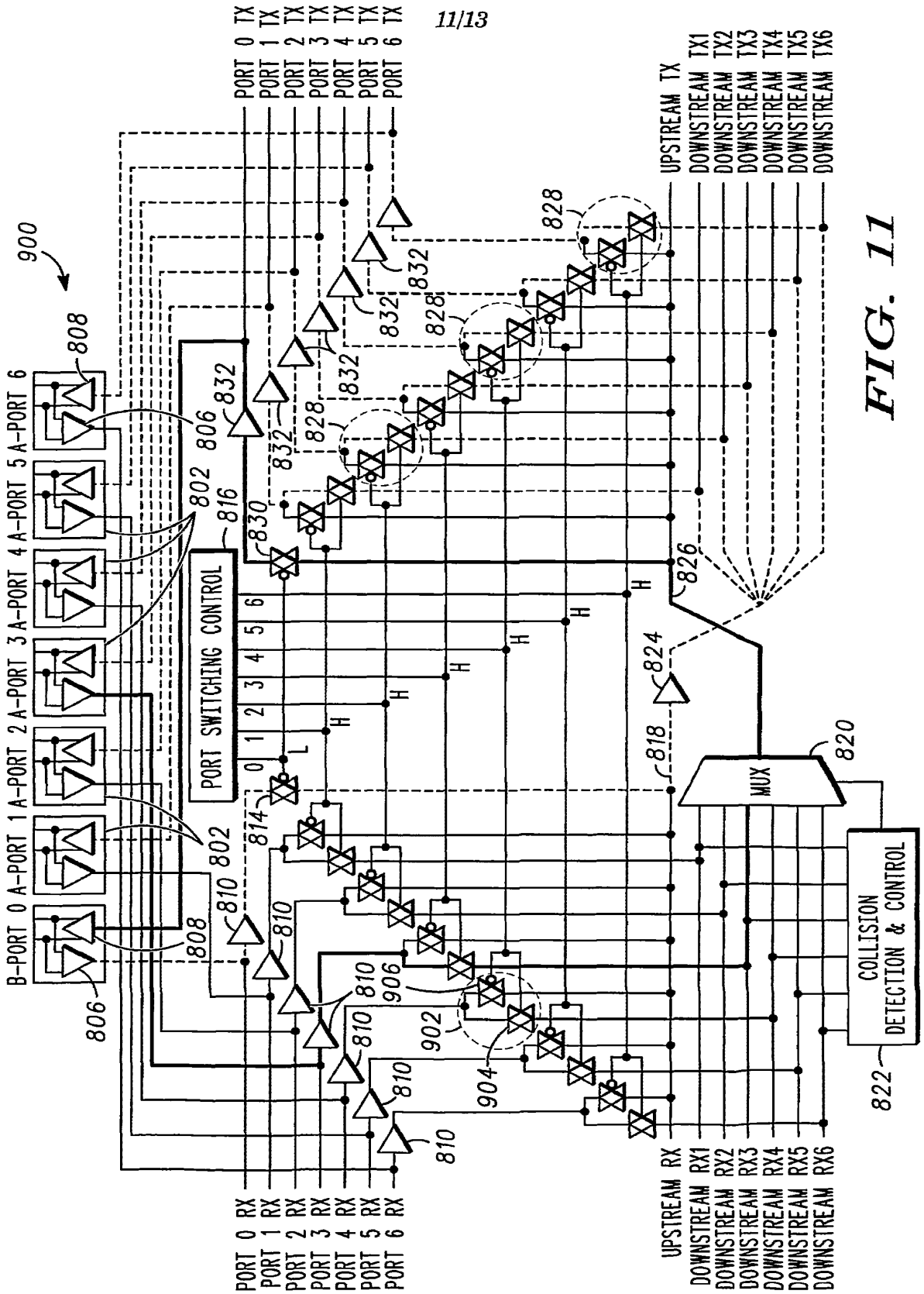
900
B-PORT 0
A-PORT 1
A-PORT 2
A-PORT 3
A-PORT 4
A-PORT 5
A-PORT 6
PORT SWITCHING CONTROL
MUX
COLLISION DETECTION & CONTROL
PORT 0 TX
PORT 1 TX
PORT 2 TX
PORT 3 TX
PORT 4 TX
PORT 5 TX
PORT 6 TX
PORT 0 RX
PORT 1 RX
PORT 2 RX
PORT 3 RX
PORT 4 RX
PORT 5 RX
PORT 6 RX
UPSTREAM TX
DOWNSTREAM TX1
DOWNSTREAM TX2
DOWNSTREAM TX3
DOWNSTREAM TX4
DOWNSTREAM TX5
DOWNSTREAM TX6
UPSTREAM RX
DOWNSTREAM RX1
DOWNSTREAM RX2
DOWNSTREAM RX3
DOWNSTREAM RX4
DOWNSTREAM RX5
DOWNSTREAM RX6
806
808
802
810
814
816
818
820
822
824
826
828
830
832
902
904
906

FIG. 11

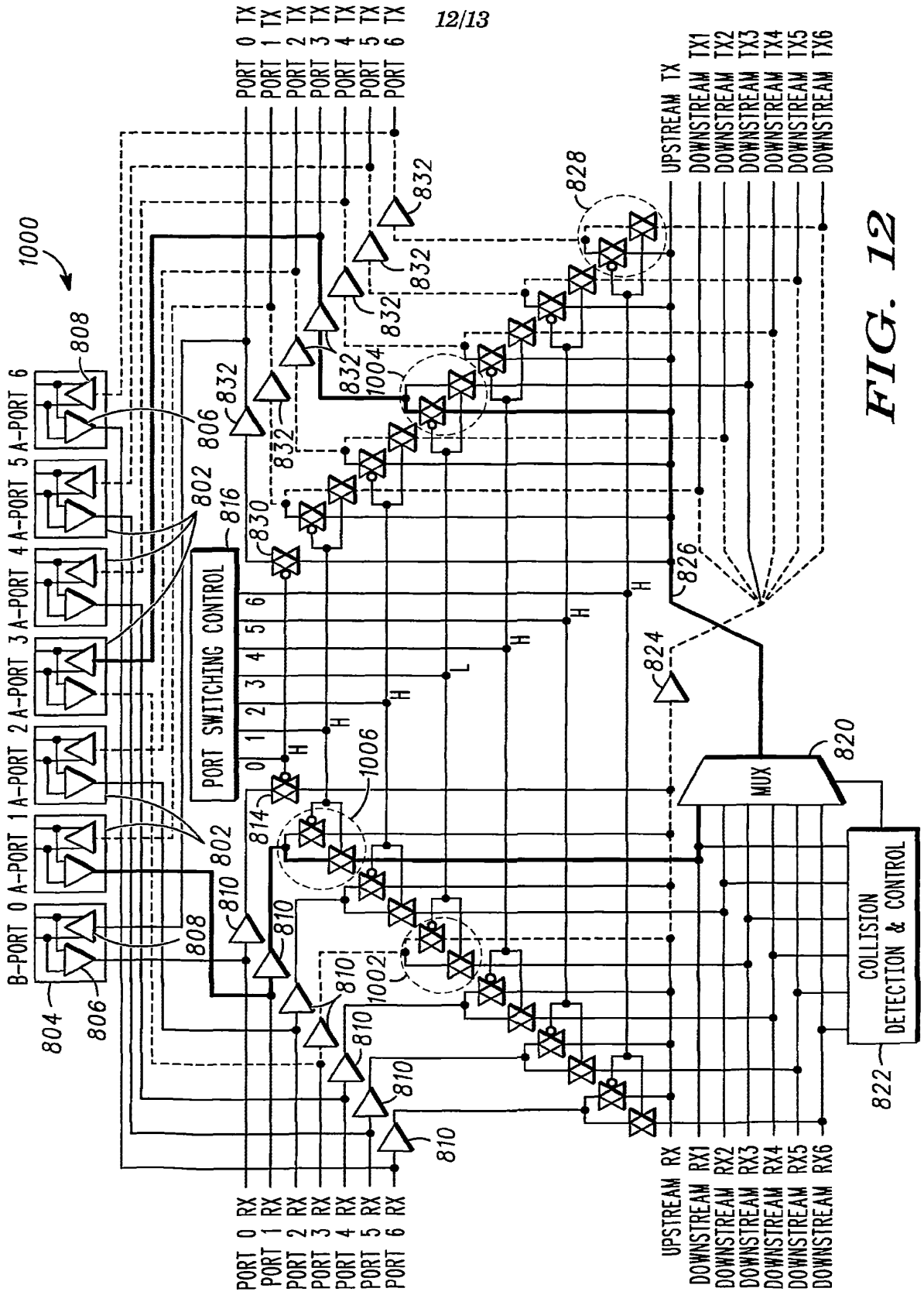
1000
B-PORT 0
A-PORT 1
A-PORT 2
A-PORT 3
A-PORT 4
A-PORT 5
A-PORT 6
PORT SWITCHING CONTROL
0 1 2 3 4 5 6
MUX
COLLISION DETECTION & CONTROL
PORT 0 TX
PORT 1 TX
PORT 2 TX
PORT 3 TX
PORT 4 TX
PORT 5 TX
PORT 6 TX
PORT 0 RX
PORT 1 RX
PORT 2 RX
PORT 3 RX
PORT 4 RX
PORT 5 RX
PORT 6 RX
UPSTREAM TX
DOWNSTREAM TX1
DOWNSTREAM TX2
DOWNSTREAM TX3
DOWNSTREAM TX4
DOWNSTREAM TX5
DOWNSTREAM TX6
UPSTREAM RX
DOWNSTREAM RX1
DOWNSTREAM RX2
DOWNSTREAM RX3
DOWNSTREAM RX4
DOWNSTREAM RX5
DOWNSTREAM RX6
804
806
808
810
814
816
820
822
824
826
828
830
832
1002
1004
1006
H
L

FIG. 12

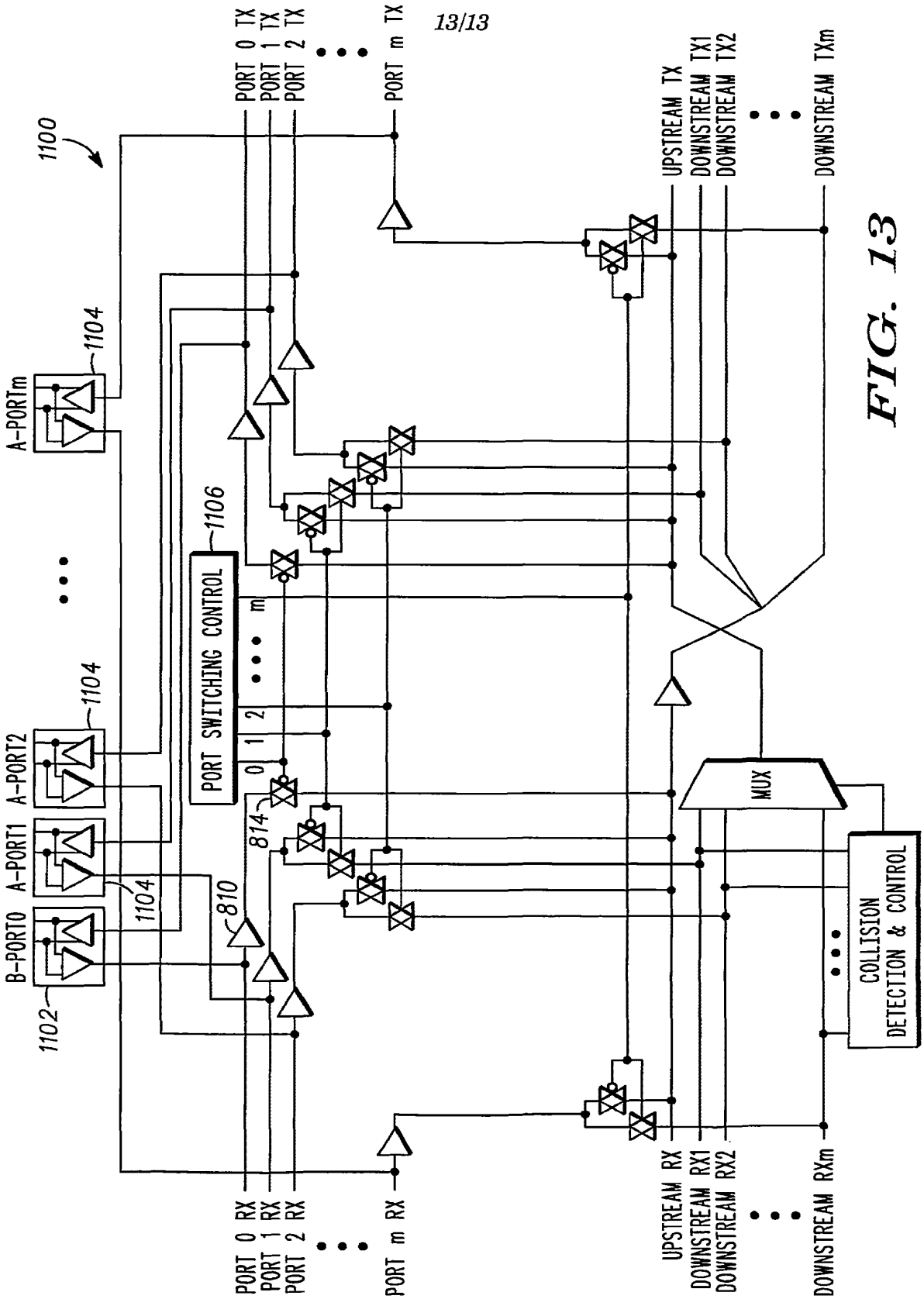
1100
PORT 0 TX
PORT 1 TX
PORT 2 TX
PORT m TX
UPSTREAM TX
DOWNSTREAM TX1
DOWNSTREAM TX2
DOWNSTREAM TXm
A-PORTm
1104
1106
PORT SWITCHING CONTROL
0
1
2
m
A-PORT2
A-PORT1
B-PORT0
1102
814
810
MUX
COLLISION DETECTION & CONTROL
PORT 0 RX
PORT 1 RX
PORT 2 RX
PORT m RX
UPSTREAM RX
DOWNSTREAM RX1
DOWNSTREAM RX2
DOWNSTREAM RXm

FIG. 13

INTERNATIONAL SEARCH REPORT

International application No.
PCT/US03/21250

A. CLASSIFICATION OF SUBJECT MATTER

IPC(7) : G06F 13/00
US CL : 710/110

According to International Patent Classification (IPC) or to both national classification and IPC

B. FIELDS SEARCHED

Minimum documentation searched (classification system followed by classification symbols)
U.S. : 710/38, 305, 313, 316; 370/362

Documentation searched other than minimum documentation to the extent that such documents are included in the fields searched

Electronic data base consulted during the international search (name of data base and, where practicable, search terms used)

C. DOCUMENTS CONSIDERED TO BE RELEVANT

Category *	Citation of document, with indication, where appropriate, of the relevant passages	Relevant to claim No.
X	US 5,784,581 A (HANNAH) 21 July 1998 (21.07.1998), column 6, lines 4-65.	1-28

☐ Further documents are listed in the continuation of Box C. ☐ See patent family annex.

* Special categories of cited documents:

"A" document defining the general state of the art which is not considered to be of particular relevance

"E" earlier application or patent published on or after the international filing date

"L" document which may throw doubts on priority claim(s) or which is cited to establish the publication date of another citation or other special reason (as specified)

"O" document referring to an oral disclosure, use, exhibition or other means

"P" document published prior to the international filing date but later than the priority date claimed

"T" later document published after the international filing date or priority date and not in conflict with the application but cited to understand the principle or theory underlying the invention

"X" document of particular relevance; the claimed invention cannot be considered novel or cannot be considered to involve an inventive step when the document is taken alone

"Y" document of particular relevance; the claimed invention cannot be considered to involve an inventive step when the document is combined with one or more other such documents, such combination being obvious to a person skilled in the art

"&" document member of the same patent family

Date of the actual completion of the international search	Date of mailing of the international search report
28 August 2003 (28.08.2003)	23 OCT 2003
Name and mailing address of the ISA/US Mail Stop PCT, Attn: ISA/US Commissioner for Patents P.O. Box 1450 Alexandria, Virginia 22313-1450 Facsimile No. (703)305-3230	Authorized officer Mark Rinehart Telephone No. (703)305-2100

Form PCT/ISA/210 (second sheet) (July 1998)

Electronic Acknowledgement Receipt

EFS ID:	47817270
Application Number:	17498045
International Application Number:	
Confirmation Number:	2854
Title of Invention:	FLEXIBLE MOBILE DEVICE CONNECTIVITY TO AUTOMOTIVE SYSTEMS WITH USB HUBS
First Named Inventor/Applicant Name:	Robert M. Voto
Customer Number:	171991
Filer:	Robert James Myers/Rebecca Krueger
Filer Authorized By:	Robert James Myers
Attorney Docket Number:	7021.145US5
Receipt Date:	10-APR-2023
Filing Date:	11-OCT-2021
Time Stamp:	15:04:05
Application Type:	Utility under 35 USC 111(a)

Payment information:

Submitted with Payment	no

File Listing:

Document Number	Document Description	File Name	File Size(Bytes)/ Message Digest	Multi Part /.zip	Pages (if appl.)
1	Foreign Reference	WO_2004012090_A1.pdf	2111793 15480e0adb9cc3c1a342a97f4716456a94dd19b1	no	35

Warnings:

Information:					
2	Non Patent Literature	Summons-Oral-Proceedings.pdf	303826 6b095725fb384ddbf8b71629e05975049218d880	no	8
Warnings:					
Information:					
			Total Files Size (in bytes):	2415619	

This Acknowledgement Receipt evidences receipt on the noted date by the USPTO of the indicated documents, characterized by the applicant, and including page counts, where applicable. It serves as evidence of receipt similar to a Post Card, as described in MPEP 503.

New Applications Under 35 U.S.C. 111
If a new application is being filed and the application includes the necessary components for a filing date (see 37 CFR 1.53(b)-(d) and MPEP 506), a Filing Receipt (37 CFR 1.54) will be issued in due course and the date shown on this Acknowledgement Receipt will establish the filing date of the application.
National Stage of an International Application under 35 U.S.C. 371
If a timely submission to enter the national stage of an international application is compliant with the conditions of 35 U.S.C. 371 and other applicable requirements a Form PCT/DO/EO/903 indicating acceptance of the application as a national stage submission under 35 U.S.C. 371 will be issued in addition to the Filing Receipt, in due course.
New International Application Filed with the USPTO as a Receiving Office
If a new international application is being filed and the international application includes the necessary components for an international filing date (see PCT Article 11 and MPEP 1810), a Notification of the International Application Number and of the International Filing Date (Form PCT/RO/105) will be issued in due course, subject to prescriptions concerning national security, and the date shown on this Acknowledgement Receipt will establish the international filing date of the application.

PTO/SB/30EFS (07-09)
Approved for use through 07/31/2012. OMB 0651-0031
U.S. Patent and Trademark Office; U.S. DEPARTMENT OF COMMERCE
Under the Paperwork Reduction Act of 1995, no persons are required to respond to a collection of information unless it contains a valid OMB control number.

REQUEST FOR CONTINUED EXAMINATION(RCE)TRANSMITTAL
(Submitted Only via EFS-Web)

Application Number	17498045	Filing Date	2021-10-11	Docket Number (if applicable)	7021.145US5	Art Unit	2181
First Named Inventor	Robert M . Voto			Examiner Name	Unelus Ernest		

This is a Request for Continued Examination (RCE) under 37 CFR 1.114 of the above-identified application.
Request for Continued Examination (RCE) practice under 37 CFR 1.114 does not apply to any utility or plant application filed prior to June 8, 1995, or to any design application. The Instruction Sheet for this form is located at WWW.USPTO.GOV

SUBMISSION REQUIRED UNDER 37 CFR 1.114

Note: If the RCE is proper, any previously filed unentered amendments and amendments enclosed with the RCE will be entered in the order in which they were filed unless applicant instructs otherwise. If applicant does not wish to have any previously filed unentered amendment(s) entered, applicant must request non-entry of such amendment(s).

☐ Previously submitted. If a final Office action is outstanding, any amendments filed after the final Office action may be considered as a submission even if this box is not checked.

- ☐ Consider the arguments in the Appeal Brief or Reply Brief previously filed on _____
- ☐ Other _____

☒ Enclosed

- ☐ Amendment/Reply
- ☒ Information Disclosure Statement (IDS)
- ☐ Affidavit(s)/ Declaration(s)
- ☒ Other CERTIFICATION AND REQUEST FOR CONSIDERATION OF AN INFORMATION DISCLOSURE STATEMENT FILED AFTER PAYMENT OF THE ISSUE FEE UNDER THE QPIDS PROGRAM and PETITION TO WITHDRAW AN APPLICATION FROM ISSUE AFTER PAYMENT OF THE ISSUE FEE UNDER 37 CFR 1.313(c)

MISCELLANEOUS

☐ Suspension of action on the above-identified application is requested under 37 CFR 1.103(c) for a period of months _____
(Period of suspension shall not exceed 3 months; Fee under 37 CFR 1.17(i) required)

☐ Other _____

FEES

☒ **The RCE fee under 37 CFR 1.17(e) is required by 37 CFR 1.114 when the RCE is filed.**
The Director is hereby authorized to charge any underpayment of fees, or credit any overpayments, to Deposit Account No 503141

SIGNATURE OF APPLICANT, ATTORNEY, OR AGENT REQUIRED

☒ Patent Practitioner Signature
Applicant Signature

PTO/SB/30EFS (07-09)
Approved for use through 07/31/2012. OMB 0651-0031
U.S. Patent and Trademark Office; U.S. DEPARTMENT OF COMMERCE
Under the Paperwork Reduction Act of 1995, no persons are required to respond to a collection of information unless it contains a valid OMB control number.

Signature of Registered U.S. Patent Practitioner			
Signature	/Robert Myers/	Date (YYYY-MM-DD)	2023-04-10
Name	Robert Myers	Registration Number	69783

This collection of information is required by 37 CFR 1.114. The information is required to obtain or retain a benefit by the public which is to file (and by the USPTO to process) an application. Confidentiality is governed by 35 U.S.C. 122 and 37 CFR 1.11 and 1.14. This collection is estimated to take 12 minutes to complete, including gathering, preparing, and submitting the completed application form to the USPTO. Time will vary depending upon the individual case. Any comments on the amount of time you require to complete this form and/or suggestions for reducing this burden, should be sent to the Chief Information Officer, U.S. Patent and Trademark Office, U.S. Department of Commerce, P.O. Box 1450, Alexandria, VA 22313-1450.

If you need assistance in completing the form, call 1-800-PTO-9199 and select option 2.

Privacy Act Statement

The Privacy Act of 1974 (P.L. 93-579) requires that you be given certain information in connection with your submission of the attached form related to a patent application or patent. Accordingly, pursuant to the requirements of the Act, please be advised that: (1) the general authority for the collection of this information is 35 U.S.C. 2(b)(2); (2) furnishing of the information solicited is voluntary; and (3) the principal purpose for which the information is used by the U.S. Patent and Trademark Office is to process and/or examine your submission related to a patent application or patent. If you do not furnish the requested information, the U.S. Patent and Trademark Office may not be able to process and/or examine your submission, which may result in termination of proceedings or abandonment of the application or expiration of the patent.

The information provided by you in this form will be subject to the following routine uses:

1. The information on this form will be treated confidentially to the extent allowed under the Freedom of Information Act (5 U.S.C. 552) and the Privacy Act (5 U.S.C. 552a). Records from this system of records may be disclosed to the Department of Justice to determine whether the Freedom of Information Act requires disclosure of these records.

2. A record from this system of records may be disclosed, as a routine use, in the course of presenting evidence to a court, magistrate, or administrative tribunal, including disclosures to opposing counsel in the course of settlement negotiations.

3. A record in this system of records may be disclosed, as a routine use, to a Member of Congress submitting a request involving an individual, to whom the record pertains, when the individual has requested assistance from the Member with respect to the subject matter of the record.

4. A record in this system of records may be disclosed, as a routine use, to a contractor of the Agency having need for the information in order to perform a contract. Recipients of information shall be required to comply with the requirements of the Privacy Act of 1974, as amended, pursuant to 5 U.S.C. 552a(m).

5. A record related to an International Application filed under the Patent Cooperation Treaty in this system of records may be disclosed, as a routine use, to the International Bureau of the World Intellectual Property Organization, pursuant to the Patent Cooperation Treaty.

6. A record in this system of records may be disclosed, as a routine use, to another federal agency for purposes of National Security review (35 U.S.C. 181) and for review pursuant to the Atomic Energy Act (42 U.S.C. 218(c)).

7. A record from this system of records may be disclosed, as a routine use, to the Administrator, General Services, or his/her designee, during an inspection of records conducted by GSA as part of that agency's responsibility to recommend improvements in records management practices and programs, under authority of 44 U.S.C. 2904 and 2906. Such disclosure shall be made in accordance with the GSA regulations governing inspection of records for this purpose, and any other relevant (i.e., GSA or Commerce) directive. Such disclosure shall not be used to make determinations about individuals.

8. A record from this system of records may be disclosed, as a routine use, to the public after either publication of the application pursuant to 35 U.S.C. 122(b) or issuance of a patent pursuant to 35 U.S.C. 151. Further, a record may be disclosed, subject to the limitations of 37 CFR 1.14, as a routine use, to the public if the record was filed in an application which became abandoned or in which the proceedings were terminated and which application is referenced by either a published application, an application open to public inspections or an issued patent.

9. A record from this system of records may be disclosed, as a routine use, to a Federal, State, or local law enforcement agency, if the USPTO becomes aware of a violation or potential violation of law or regulation.

Doc Code: QPIDS.REQ
Document Description: QuickPath Information Disclosure Statement

PTO/SB/09 (09-18)

CERTIFICATION AND REQUEST FOR CONSIDERATION OF AN INFORMATION DISCLOSURE STATEMENT FILED AFTER PAYMENT OF THE ISSUE FEE UNDER THE QPIDS PROGRAM

Non-Provisional Application Number: 17498045	Filing Date: 2021-10-11
First Named Inventor: Robert M . Voto	Title of Invention: FLEXIBLE MOBILE DEVICE CONNECTIVITY TO AUTOMOTIVE SYSTEMS WITH USB HUBS

THE UNDERSIGNED HEREBY CERTIFIES AND REQUESTS THE FOLLOWING FOR THE ABOVE-IDENTIFIED APPLICATION.

1. Consideration is requested of the information disclosure statement (IDS) submitted herewith, which is being filed after payment of the issue fee.
2. Check the box next to the appropriate selection:

   ☑ Each item of information contained in the IDS was first cited in any communication from a foreign patent office in a counterpart foreign application not more than three months prior to the filing of the IDS. See 37 CFR 1.97(e)(1).

   OR

   ☐ No item of information contained in the IDS was cited in a communication from a foreign patent office in a counterpart foreign application, and, to the knowledge of the person signing the certification after making reasonable inquiry, no item of information contained in the IDS was known to any individual designated in 37 CFR 1.56(c) more than three months prior to the filing of the IDS. See 37 CFR 1.97(e)(2).

   OR

   ☐ See attached certification statement in compliance with 37 CFR 1.97(e).
3. Please charge the IDS fee set forth in 37 CFR 1.17(p) to Deposit Account No. 50-3141.
4. A Petition to Withdraw from Issue After Payment of the Issue Fee (37 CFR 1.313(c)(2)), including the petition fee set forth in 37 CFR 1.17(h), is submitted herewith as a **Web-based ePetition**.
   WARNING: Do not submit the petition as a follow-on paper via EFS-Web. Submit the petition as a Web-based ePetition by signing on to EFS-Web as a registered user, selecting the radio button next to "Existing application/patent," and then selecting the radio button next to "ePetition (for automatic processing and immediate grant, if all petitions requirements are met)." Failure to use the Web-based ePetition interface will result in automatic entry of the RCE.
5. A request for continued examination (RCE) under 37 CFR 1.114 and the RCE fee under 37 CFR 1.17(e) are submitted herewith.
6. The RCE will be treated as a "conditional" RCE. In the event the examiner determines that any item of information contained in the IDS necessitates the reopening of prosecution in the application, the undersigned understands that (i) the RCE will be processed and treated as an RCE under 37 CFR 1.114 and therefore (ii) the IDS fee under 37 CFR 1.17(p) will be returned in accordance with 37 CFR 1.97(b)(4). In the event that no item of information in the IDS necessitates reopening prosecution, the undersigned understands that the RCE will not be processed and the RCE fee under 37 CFR 1.17(e) will be returned.
7. This certification and request is being filed as a **Web-based ePetition** and is not accompanied by an amendment to the application. Inclusion of an amendment will result in automatic entry of the RCE.

Signature /Robert Myers/	Date 2023-04-10
Name (Print/Typed) Robert Myers	Practitioner Registration Number (If applicable) 69,783

Note: *Signatures of all the inventors or assignees of record of the entire interest or their representative(s) are required in accordance with 37 CFR 1.33 and 11.18. Please see 37 CFR 1.4(d) for the form of the signature. If necessary, submit multiple forms for more than one signature, see below.**

☑ *Total of 1 forms are submitted.

If you need assistance in completing the form, call 1-800-PTO-9199 and select option 2.

Privacy Act Statement

The **Privacy Act of 1974 (P.L. 93-579)** requires that you be given certain information in connection with your submission of the attached form related to a patent application or patent. Accordingly, pursuant to the requirements of the Act, please be advised that: (1) the general authority for the collection of this information is 35 U.S.C. 2(b)(2); (2) furnishing of the information solicited is voluntary; and (3) the principal purpose for which the information is used by the U.S. Patent and Trademark Office is to process and/or examine your submission related to a patent application or patent. If you do not furnish the requested information, the U.S. Patent and Trademark Office may not be able to process and/or examine your submission, which may result in termination of proceedings or abandonment of the application or expiration of the patent.

The information provided by you in this form will be subject to the following routine uses:

1. The information on this form will be treated confidentially to the extent allowed under the Freedom of Information Act (5 U.S.C. 552) and the Privacy Act (5 U.S.C 552a). Records from this system of records may be disclosed to the Department of Justice to determine whether disclosure of these records is required by the Freedom of Information Act.
2. A record from this system of records may be disclosed, as a routine use, in the course of presenting evidence to a court, magistrate, or administrative tribunal, including disclosures to opposing counsel in the course of settlement negotiations.
3. A record in this system of records may be disclosed, as a routine use, to a Member of Congress submitting a request involving an individual, to whom the record pertains, when the individual has requested assistance from the Member with respect to the subject matter of the record.
4. A record in this system of records may be disclosed, as a routine use, to a contractor of the Agency having need for the information in order to perform a contract. Recipients of information shall be required to comply with the requirements of the Privacy Act of 1974, as amended, pursuant to 5 U.S.C. 552a(m).
5. A record related to an International Application filed under the Patent Cooperation Treaty in this system of records may be disclosed, as a routine use, to the International Bureau of the World Intellectual Property Organization, pursuant to the Patent Cooperation Treaty.
6. A record in this system of records may be disclosed, as a routine use, to another federal agency for purposes of National Security review (35 U.S.C. 181) and for review pursuant to the Atomic Energy Act (42 U.S.C. 218(c)).
7. A record from this system of records may be disclosed, as a routine use, to the Administrator, General Services, or his/her designee, during an inspection of records conducted by GSA as part of that agency's responsibility to recommend improvements in records management practices and programs, under authority of 44 U.S.C. 2904 and 2906. Such disclosure shall be made in accordance with the GSA regulations governing inspection of records for this purpose, and any other relevant (*i.e.*, GSA or Commerce) directive. Such disclosure shall not be used to make determinations about individuals.
8. A record from this system of records may be disclosed, as a routine use, to the public after either publication of the application pursuant to 35 U.S.C. 122(b) or issuance of a patent pursuant to 35 U.S.C. 151. Further, a record may be disclosed, subject to the limitations of 37 CFR 1.14, as a routine use, to the public if the record was filed in an application which became abandoned or in which the proceedings were terminated and which application is referenced by either a published application, an application open to public inspection or an issued patent.
9. A record from this system of records may be disclosed, as a routine use, to a Federal, State, or local law enforcement agency, if the USPTO becomes aware of a violation or potential violation of law or regulation.

PTO/SB/08a (02-18)
Approved for use through 11/30/2020. OMB 0651-0031
U.S. Patent and Trademark Office; U.S. DEPARTMENT OF COMMERCE
Under the Paperwork Reduction Act of 1995, no persons are required to respond to a collection of information unless it contains a valid OMB control number.

INFORMATION DISCLOSURE STATEMENT BY APPLICANT

(Not for submission under 37 CFR 1.99)

Application Number	17498045
Filing Date	2021-10-11
First Named Inventor	Robert M . Voto
Art Unit	2181
Examiner Name	Unelus Ernest
Attorney Docket Number	7021.145US5

U.S.PATENTS Remove

Examiner Initial*	Cite No	Patent Number	Kind Code[1]	Issue Date	Name of Patentee or Applicant of cited Document	Pages,Columns,Lines where Relevant Passages or Relevant Figures Appear
	1					

If you wish to add additional U.S. Patent citation information please click the Add button. Add

U.S.PATENT APPLICATION PUBLICATIONS Remove

Examiner Initial*	Cite No	Publication Number	Kind Code[1]	Publication Date	Name of Patentee or Applicant of cited Document	Pages,Columns,Lines where Relevant Passages or Relevant Figures Appear
	1	20070245058	A1	2007-10-18	WURZBURG, et al.	
	2	20090185559	A1	2009-07-23	CHEN, et al.	
	3	20090268743	A1	2009-10-29	CHANG, et al.	

If you wish to add additional U.S. Published Application citation information please click the Add button. Add

FOREIGN PATENT DOCUMENTS Remove

Examiner Initial*	Cite No	Foreign Document Number[3]	Country Code[2] i	Kind Code[4]	Publication Date	Name of Patentee or Applicant of cited Document	Pages,Columns,Lines where Relevant Passages or Relevant Figures Appear	T[5]
	1	2004012090	WO	A1	2004-02-05	MOTOROLA, INC.		

INFORMATION DISCLOSURE STATEMENT BY APPLICANT (Not for submission under 37 CFR 1.99)	Application Number	17498045
	Filing Date	2021-10-11
	First Named Inventor	Robert M . Voto
	Art Unit	2181
	Examiner Name	Unelus Ernest
	Attorney Docket Number	7021.145US5

If you wish to add additional Foreign Patent Document citation information please click the Add button Add

NON-PATENT LITERATURE DOCUMENTS Remove

Examiner Initials*	Cite No	Include name of the author (in CAPITAL LETTERS), title of the article (when appropriate), title of the item (book, magazine, journal, serial, symposium, catalog, etc), date, pages(s), volume-issue number(s), publisher, city and/or country where published.	T[5]
	1	"Summons to attend oral proceedings pursuant to Rule 115(1) EPC Received mailed on 02/23/23", 8 Pages	

If you wish to add additional non-patent literature document citation information please click the Add button Add

EXAMINER SIGNATURE

Examiner Signature		Date Considered	

*EXAMINER: Initial if reference considered, whether or not citation is in conformance with MPEP 609. Draw line through a citation if not in conformance and not considered. Include copy of this form with next communication to applicant.

[1] See Kind Codes of USPTO Patent Documents at www.USPTO.GOV or MPEP 901.04. [2] Enter office that issued the document, by the two-letter code (WIPO Standard ST.3). [3] For Japanese patent documents, the indication of the year of the reign of the Emperor must precede the serial number of the patent document. [4] Kind of document by the appropriate symbols as indicated on the document under WIPO Standard ST.16 if possible. [5] Applicant is to place a check mark here if English language translation is attached.

INFORMATION DISCLOSURE STATEMENT BY APPLICANT (Not for submission under 37 CFR 1.99)	Application Number	17498045
	Filing Date	2021-10-11
	First Named Inventor	Robert M . Voto
	Art Unit	2181
	Examiner Name	Unelus Ernest
	Attorney Docket Number	7021.145US5

CERTIFICATION STATEMENT

Please see 37 CFR 1.97 and 1.98 to make the appropriate selection(s):

✓ That each item of information contained in the information disclosure statement was first cited in any communication from a foreign patent office in a counterpart foreign application not more than three months prior to the filing of the information disclosure statement. See 37 CFR 1.97(e)(1).

OR

☐ That no item of information contained in the information disclosure statement was cited in a communication from a foreign patent office in a counterpart foreign application, and, to the knowledge of the person signing the certification after making reasonable inquiry, no item of information contained in the information disclosure statement was known to any individual designated in 37 CFR 1.56(c) more than three months prior to the filing of the information disclosure statement. See 37 CFR 1.97(e)(2).

✓ See attached certification statement.

The fee set forth in 37 CFR 1.17 (p) has been submitted herewith.

A certification statement is not submitted herewith.

SIGNATURE

A signature of the applicant or representative is required in accordance with CFR 1.33, 10.18. Please see CFR 1.4(d) for the form of the signature.

Signature	/Robert J. Myers/	Date (YYYY-MM-DD)	2023-04-10
Name/Print	Robert J. Myers	Registration Number	69,783

This collection of information is required by 37 CFR 1.97 and 1.98. The information is required to obtain or retain a benefit by the public which is to file (and by the USPTO to process) an application. Confidentiality is governed by 35 U.S.C. 122 and 37 CFR 1.14. This collection is estimated to take 1 hour to complete, including gathering, preparing and submitting the completed application form to the USPTO. Time will vary depending upon the individual case. Any comments on the amount of time you require to complete this form and/or suggestions for reducing this burden, should be sent to the Chief Information Officer, U.S. Patent and Trademark Office, U.S. Department of Commerce, P.O. Box 1450, Alexandria, VA 22313-1450. DO NOT SEND FEES OR COMPLETED FORMS TO THIS ADDRESS. **SEND TO: Commissioner for Patents, P.O. Box 1450, Alexandria, VA 22313-1450.**

Privacy Act Statement

The Privacy Act of 1974 (P.L. 93-579) requires that you be given certain information in connection with your submission of the attached form related to a patent application or patent. Accordingly, pursuant to the requirements of the Act, please be advised that: (1) the general authority for the collection of this information is 35 U.S.C. 2(b)(2); (2) furnishing of the information solicited is voluntary; and (3) the principal purpose for which the information is used by the U.S. Patent and Trademark Office is to process and/or examine your submission related to a patent application or patent. If you do not furnish the requested information, the U.S. Patent and Trademark Office may not be able to process and/or examine your submission, which may result in termination of proceedings or abandonment of the application or expiration of the patent.

The information provided by you in this form will be subject to the following routine uses:

1. The information on this form will be treated confidentially to the extent allowed under the Freedom of Information Act (5 U.S.C. 552) and the Privacy Act (5 U.S.C. 552a). Records from this system of records may be disclosed to the Department of Justice to determine whether the Freedom of Information Act requires disclosure of these record s.

2. A record from this system of records may be disclosed, as a routine use, in the course of presenting evidence to a court, magistrate, or administrative tribunal, including disclosures to opposing counsel in the course of settlement negotiations.

3. A record in this system of records may be disclosed, as a routine use, to a Member of Congress submitting a request involving an individual, to whom the record pertains, when the individual has requested assistance from the Member with respect to the subject matter of the record.

4. A record in this system of records may be disclosed, as a routine use, to a contractor of the Agency having need for the information in order to perform a contract. Recipients of information shall be required to comply with the requirements of the Privacy Act of 1974, as amended, pursuant to 5 U.S.C. 552a(m).

5. A record related to an International Application filed under the Patent Cooperation Treaty in this system of records may be disclosed, as a routine use, to the International Bureau of the World Intellectual Property Organization, pursuant to the Patent Cooperation Treaty.

6. A record in this system of records may be disclosed, as a routine use, to another federal agency for purposes of National Security review (35 U.S.C. 181) and for review pursuant to the Atomic Energy Act (42 U.S.C. 218(c)).

7. A record from this system of records may be disclosed, as a routine use, to the Administrator, General Services, or his/her designee, during an inspection of records conducted by GSA as part of that agency's responsibility to recommend improvements in records management practices and programs, under authority of 44 U.S.C. 2904 and 2906. Such disclosure shall be made in accordance with the GSA regulations governing inspection of records for this purpose, and any other relevant (i.e., GSA or Commerce) directive. Such disclosure shall not be used to make determinations about individuals.

8. A record from this system of records may be disclosed, as a routine use, to the public after either publication of the application pursuant to 35 U.S.C. 122(b) or issuance of a patent pursuant to 35 U.S.C. 151. Further, a record may be disclosed, subject to the limitations of 37 CFR 1.14, as a routine use, to the public if the record was filed in an application which became abandoned or in which the proceedings were terminated and which application is referenced by either a published application, an application open to public inspections or an issued patent.

9. A record from this system of records may be disclosed, as a routine use, to a Federal, State, or local law enforcement agency, if the USPTO becomes aware of a violation or potential violation of law or regulation.

Microchip Ex. 1012, p. 183
Microchip v. Aptiv
IPR2024-00496

Electronic Patent Application Fee Transmittal

Application Number:	17498045
Filing Date:	11-Oct-2021
Title of Invention:	FLEXIBLE MOBILE DEVICE CONNECTIVITY TO AUTOMOTIVE SYSTEMS WITH USB HUBS
First Named Inventor/Applicant Name:	Robert M. Voto
Filer:	Robert James Myers/Rebecca Krueger
Attorney Docket Number:	7021.145US5

Filed as Large Entity

Filing Fees for Utility under 35 USC 111(a)

Description	Fee Code	Quantity	Amount	Sub-Total in USD($)
Basic Filing:				
PETITION FEE- 37 CFR 1.17(H) (GROUP III)	1464	1	140	140
RCE- 1ST REQUEST	1801	1	1360	1360
Pages:				
Claims:				
Miscellaneous-Filing:				
Petition:				
Patent-Appeals-and-Interference:				

Description	Fee Code	Quantity	Amount	Sub-Total in USD($)
Post-Allowance-and-Post-Issuance:				
Extension-of-Time:				
Miscellaneous:				
			Total in USD ($)	**1500**

UNITED STATES PATENT AND TRADEMARK OFFICE

Commissioner for Patents
United States Patent and Trademark Office
P.O. Box 1450
Alexandria, VA 22313-1450
www.uspto.gov

Decision Date : April 10, 2023

In re Application of :

Robert M. Voto

DECISION ON PETITION

UNDER CFR 1.313(c)(2)

Application No : 17498045

Filed : 11-Oct-2021

Attorney Docket No : 7021.145US5

This is an electronic decision on the petition under 37 CFR 1.313(c)(2), filed April 10, 2023 , to withdraw the above-identified application from issue after payment of the issue fee.

The petition is **GRANTED.**

The above-identified application is withdrawn from issue for consideration of a submission under 37 CFR 1.114 (request for continued examination). See 37 CFR 1.313(c)(2).

Petitioner is advised that the issue fee paid in this application cannot be refunded. If, however, this application is again allowed, petitioner may request that it be applied towards the issue fee required by the new Notice of Allowance.

Telephone inquiries concerning this decision should be directed to the Patent Electronic Business Center (EBC) at 866-217-9197.

This application file is being referred to Technology Center AU 2181 for processing of the request for continuing examination under 37 CFR 1.114 .

Office of Petitions

Electronic Acknowledgement Receipt

EFS ID:	47816439
Application Number:	17498045
International Application Number:	
Confirmation Number:	2854
Title of Invention:	FLEXIBLE MOBILE DEVICE CONNECTIVITY TO AUTOMOTIVE SYSTEMS WITH USB HUBS
First Named Inventor/Applicant Name:	Robert M. Voto
Customer Number:	171991
Filer:	Robert James Myers/Rebecca Krueger
Filer Authorized By:	Robert James Myers
Attorney Docket Number:	7021.145US5
Receipt Date:	10-APR-2023
Filing Date:	11-OCT-2021
Time Stamp:	14:59:09
Application Type:	Utility under 35 USC 111(a)

Payment information:

Submitted with Payment	yes
Payment Type	CARD
Payment was successfully received in RAM	$1500
RAM confirmation Number	E202340E59048006
Deposit Account	503141
Authorized User	Rebecca Krueger
The Director of the USPTO is hereby authorized to charge indicated fees and credit any overpayment as follows: 37 CFR 1.21 (Miscellaneous fees and charges)	

File Listing:

Document Number	Document Description	File Name	File Size(Bytes)/ Message Digest	Multi Part /.zip	Pages (if appl.)
1	ePetition Request Form	petition-request.pdf	39953 22618b277c552b5993568c88e47c1045f446c519	no	2
Warnings:					
Information:					
2	Request for Continued Examination (RCE)	7021-145US5-RCE.pdf	697778 e6578fbba5c23036a53a8fe9dfc6e31a11dc4f89	no	3
Warnings:					
Information:					
3	Quick Path Information Disclosure Statement	7021-145US5-QPIDS.pdf	178587 eed4ab8226471e8eb4730807794c1372655de535	no	2
Warnings:					
Information:					
4	Information Disclosure Statement (IDS) Form (SB08)	7021-145US5-IDS.pdf	1034976 97965058b4821c17c655437769bf522912ae3fa4	no	4
Warnings:					
Information:					
5	Fee Worksheet (SB06)	fee-info.pdf	40706 bf3684bd9bb131e454ac604999beb097285e42b0	no	2
Warnings:					
Information:					
			Total Files Size (in bytes):	1992000	

This Acknowledgement Receipt evidences receipt on the noted date by the USPTO of the indicated documents, characterized by the applicant, and including page counts, where applicable. It serves as evidence of receipt similar to a Post Card, as described in MPEP 503.

New Applications Under 35 U.S.C. 111
If a new application is being filed and the application includes the necessary components for a filing date (see 37 CFR 1.53(b)-(d) and MPEP 506), a Filing Receipt (37 CFR 1.54) will be issued in due course and the date shown on this Acknowledgement Receipt will establish the filing date of the application.
National Stage of an International Application under 35 U.S.C. 371
If a timely submission to enter the national stage of an international application is compliant with the conditions of 35 U.S.C. 371 and other applicable requirements a Form PCT/DO/EO/903 indicating acceptance of the application as a national stage submission under 35 U.S.C. 371 will be issued in addition to the Filing Receipt, in due course.
New International Application Filed with the USPTO as a Receiving Office
If a new international application is being filed and the international application includes the necessary components for an international filing date (see PCT Article 11 and MPEP 1810), a Notification of the International Application Number and of the International Filing Date (Form PCT/RO/105) will be issued in due course, subject to prescriptions concerning national security, and the date shown on this Acknowledgement Receipt will establish the international filing date of the application.

Doc Code: PET.AUTO Document Description: Petition automatically granted by EFS-Web	PTO/SB/140 U.S. Patent and Trademark Office Department of Commerce

Electronic Petition Request	**PETITION TO WITHDRAW AN APPLICATION FROM ISSUE AFTER PAYMENT OF THE ISSUE FEE UNDER 37 CFR 1.313(c)**
Application Number	17498045
Filing Date	11-Oct-2021
First Named Inventor	Robert Voto
Art Unit	2181
Examiner Name	ERNEST UNELUS
Attorney Docket Number	7021.145US5
Title	FLEXIBLE MOBILE DEVICE CONNECTIVITY TO AUTOMOTIVE SYSTEMS WITH USB HUBS

An application may be withdrawn from issue for further action upon petition by the applicant. To request that the Office withdraw an application from issue, applicant must file a petition under this section including the fee set forth in § 1.17(h) and a showing of good and sufficient reasons why withdrawal of the application from issue is necessary.

APPLICANT HEREBY PETITIONS TO WITHDRAW THIS APPLICATION FROM ISSUE UNDER 37 CFR 1.313(c).

A grantable petition requires the following items:
(1) Petition fee; and
(2) One of the following reasons:
(a) Unpatentability of one or more claims, which must be accompanied by an unequivocal statement that one or more claims are unpatentable, an amendment to such claim or claims, and an explanation as to how the amendment causes such claim or claims to be patentable;
(b) Consideration of a request for continued examination in compliance with § 1.114 (for a utility or plant application only); or
(c) Express abandonment of the application. Such express abandonment may be in favor of a continuing application, but not a CPA under 37 CFR 1.53(d).

Petition Fee

- ○ Small Entity
- ○ Micro Entity
- ◉ Regular Undiscounted

Reason for withdrawal from issue

○ One or more claims are unpatentable	
◉ Consideration of a request for continued examination (RCE) (List of Required Documents and Fees)	
○ Applicant hereby expressly abandons the instant application (any attorney/agent signing for this reason must have power of attorney pursuant to 37 CFR 1.32(b)).	
RCE request,submission, and fee.	
☐ I certify, in accordance with 37 CFR 1.4(d)(4) that : The RCE request ,submission, and fee have already been filed in the above-identified application on	
☒ Are attached.	
THIS PORTION MUST BE COMPLETED BY THE SIGNATORY OR SIGNATORIES	
I certify, in accordance with 37 CFR 1.4(d)(4) that I am:	
◉ An attorney or agent registered to practice before the Patent and Trademark Office who has been given power of attorney in this application.	
○ An attorney or agent registered to practice before the Patent and Trademark Office, acting in a representative capacity.	
○ A sole inventor	
○ A joint inventor; I certify that I am authorized to sign this submission on behalf of all of the inventors as evidenced by the power of attorney in the application	
○ A joint inventor; all of whom are signing this e-petition	
Signature	/Robert Myers/
Name	Robert Myers
Registration Number	69783

United States Patent and Trademark Office

Office of the Chief Financial Officer

Document Code:WFEE

User :Charmise Carter

Sale Accounting Date:04/11/2023

Sale Item Reference Number	Effective Date
17498045	04/10/2023

Document Number	Fee Code	Fee Code Description	Amount Paid	Payment Method
I20234A853137403	1806	SUBMISSION- INFORMATION DISCLOSURE STMT	$260.00	Deposit Account

PTO/SB/08a (02-18)
Approved for use through 11/30/2020. OMB 0651-0031
U.S. Patent and Trademark Office; U.S. DEPARTMENT OF COMMERCE
Under the Paperwork Reduction Act of 1995, no persons are required to respond to a collection of information unless it contains a valid OMB control number.

INFORMATION DISCLOSURE STATEMENT BY APPLICANT

(Not for submission under 37 CFR 1.99)

Application Number	17498045
Filing Date	2021-10-11
First Named Inventor	Robert M . Voto
Art Unit	2181
Examiner Name	Unelus Ernest
Attorney Docket Number	7021.145US5

U.S.PATENTS Remove

Examiner Initial*	Cite No	Patent Number	Kind Code[1]	Issue Date	Name of Patentee or Applicant of cited Document	Pages,Columns,Lines where Relevant Passages or Relevant Figures Appear
	1					

If you wish to add additional U.S. Patent citation information please click the Add button. Add

U.S.PATENT APPLICATION PUBLICATIONS Remove

Examiner Initial*	Cite No	Publication Number	Kind Code[1]	Publication Date	Name of Patentee or Applicant of cited Document	Pages,Columns,Lines where Relevant Passages or Relevant Figures Appear
/E.U/	1	20070245058	A1	2007-10-18	WURZBURG, et al.	
/E.U/	2	20090185559	A1	2009-07-23	CHEN, et al.	
/E.U/	3	20090268743	A1	2009-10-29	CHANG, et al.	

If you wish to add additional U.S. Published Application citation information please click the Add button. Add

FOREIGN PATENT DOCUMENTS Remove

Examiner Initial*	Cite No	Foreign Document Number[3]	Country Code[2] i	Kind Code[4]	Publication Date	Name of Patentee or Applicant of cited Document	Pages,Columns,Lines where Relevant Passages or Relevant Figures Appear	T[5]
/E.U/	1	2004012090	WO	A1	2004-02-05	MOTOROLA, INC.		

INFORMATION DISCLOSURE STATEMENT BY APPLICANT (Not for submission under 37 CFR 1.99)	Application Number	17498045
	Filing Date	2021-10-11
	First Named Inventor	Robert M . Voto
	Art Unit	2181
	Examiner Name	Unelus Ernest
	Attorney Docket Number	7021.145US5

If you wish to add additional Foreign Patent Document citation information please click the Add button Add

NON-PATENT LITERATURE DOCUMENTS Remove

Examiner Initials*	Cite No	Include name of the author (in CAPITAL LETTERS), title of the article (when appropriate), title of the item (book, magazine, journal, serial, symposium, catalog, etc), date, pages(s), volume-issue number(s), publisher, city and/or country where published.	T[5]
/E.U/	1	"Summons to attend oral proceedings pursuant to Rule 115(1) EPC Received mailed on 02/23/23", 8 Pages	

If you wish to add additional non-patent literature document citation information please click the Add button Add

EXAMINER SIGNATURE

Examiner Signature	/ERNEST UNELUS/	Date Considered	04/12/2023

*EXAMINER: Initial if reference considered, whether or not citation is in conformance with MPEP 609. Draw line through a citation if not in conformance and not considered. Include copy of this form with next communication to applicant.

[1] See Kind Codes of USPTO Patent Documents at www.USPTO.GOV or MPEP 901.04. [2] Enter office that issued the document, by the two-letter code (WIPO Standard ST.3). [3] For Japanese patent documents, the indication of the year of the reign of the Emperor must precede the serial number of the patent document. [4] Kind of document by the appropriate symbols as indicated on the document under WIPO Standard ST.16 if possible. [5] Applicant is to place a check mark here if English language translation is attached.

INFORMATION DISCLOSURE STATEMENT BY APPLICANT (Not for submission under 37 CFR 1.99)		
	Application Number	17498045
	Filing Date	2021-10-11
	First Named Inventor	Robert M . Voto
	Art Unit	2181
	Examiner Name	Unelus Ernest
	Attorney Docket Number	7021.145US5

CERTIFICATION STATEMENT

Please see 37 CFR 1.97 and 1.98 to make the appropriate selection(s):

✓ That each item of information contained in the information disclosure statement was first cited in any communication from a foreign patent office in a counterpart foreign application not more than three months prior to the filing of the information disclosure statement. See 37 CFR 1.97(e)(1).

OR

☐ That no item of information contained in the information disclosure statement was cited in a communication from a foreign patent office in a counterpart foreign application, and, to the knowledge of the person signing the certification after making reasonable inquiry, no item of information contained in the information disclosure statement was known to any individual designated in 37 CFR 1.56(c) more than three months prior to the filing of the information disclosure statement. See 37 CFR 1.97(e)(2).

✓ See attached certification statement.

The fee set forth in 37 CFR 1.17 (p) has been submitted herewith.

A certification statement is not submitted herewith.

SIGNATURE

A signature of the applicant or representative is required in accordance with CFR 1.33, 10.18. Please see CFR 1.4(d) for the form of the signature.

Signature	/Robert J. Myers/	Date (YYYY-MM-DD)	2023-04-10
Name/Print	Robert J. Myers	Registration Number	69,783

This collection of information is required by 37 CFR 1.97 and 1.98. The information is required to obtain or retain a benefit by the public which is to file (and by the USPTO to process) an application. Confidentiality is governed by 35 U.S.C. 122 and 37 CFR 1.14. This collection is estimated to take 1 hour to complete, including gathering, preparing and submitting the completed application form to the USPTO. Time will vary depending upon the individual case. Any comments on the amount of time you require to complete this form and/or suggestions for reducing this burden, should be sent to the Chief Information Officer, U.S. Patent and Trademark Office, U.S. Department of Commerce, P.O. Box 1450, Alexandria, VA 22313-1450. DO NOT SEND FEES OR COMPLETED FORMS TO THIS ADDRESS. **SEND TO: Commissioner for Patents, P.O. Box 1450, Alexandria, VA 22313-1450.**

Privacy Act Statement

The Privacy Act of 1974 (P.L. 93-579) requires that you be given certain information in connection with your submission of the attached form related to a patent application or patent. Accordingly, pursuant to the requirements of the Act, please be advised that: (1) the general authority for the collection of this information is 35 U.S.C. 2(b)(2); (2) furnishing of the information solicited is voluntary; and (3) the principal purpose for which the information is used by the U.S. Patent and Trademark Office is to process and/or examine your submission related to a patent application or patent. If you do not furnish the requested information, the U.S. Patent and Trademark Office may not be able to process and/or examine your submission, which may result in termination of proceedings or abandonment of the application or expiration of the patent.

The information provided by you in this form will be subject to the following routine uses:

1. The information on this form will be treated confidentially to the extent allowed under the Freedom of Information Act (5 U.S.C. 552) and the Privacy Act (5 U.S.C. 552a). Records from this system of records may be disclosed to the Department of Justice to determine whether the Freedom of Information Act requires disclosure of these record s.

2. A record from this system of records may be disclosed, as a routine use, in the course of presenting evidence to a court, magistrate, or administrative tribunal, including disclosures to opposing counsel in the course of settlement negotiations.

3. A record in this system of records may be disclosed, as a routine use, to a Member of Congress submitting a request involving an individual, to whom the record pertains, when the individual has requested assistance from the Member with respect to the subject matter of the record.

4. A record in this system of records may be disclosed, as a routine use, to a contractor of the Agency having need for the information in order to perform a contract. Recipients of information shall be required to comply with the requirements of the Privacy Act of 1974, as amended, pursuant to 5 U.S.C. 552a(m).

5. A record related to an International Application filed under the Patent Cooperation Treaty in this system of records may be disclosed, as a routine use, to the International Bureau of the World Intellectual Property Organization, pursuant to the Patent Cooperation Treaty.

6. A record in this system of records may be disclosed, as a routine use, to another federal agency for purposes of National Security review (35 U.S.C. 181) and for review pursuant to the Atomic Energy Act (42 U.S.C. 218(c)).

7. A record from this system of records may be disclosed, as a routine use, to the Administrator, General Services, or his/her designee, during an inspection of records conducted by GSA as part of that agency's responsibility to recommend improvements in records management practices and programs, under authority of 44 U.S.C. 2904 and 2906. Such disclosure shall be made in accordance with the GSA regulations governing inspection of records for this purpose, and any other relevant (i.e., GSA or Commerce) directive. Such disclosure shall not be used to make determinations about individuals.

8. A record from this system of records may be disclosed, as a routine use, to the public after either publication of the application pursuant to 35 U.S.C. 122(b) or issuance of a patent pursuant to 35 U.S.C. 151. Further, a record may be disclosed, subject to the limitations of 37 CFR 1.14, as a routine use, to the public if the record was filed in an application which became abandoned or in which the proceedings were terminated and which application is referenced by either a published application, an application open to public inspections or an issued patent.

9. A record from this system of records may be disclosed, as a routine use, to a Federal, State, or local law enforcement agency, if the USPTO becomes aware of a violation or potential violation of law or regulation.

Microchip Ex. 1012, p. 196
Microchip v. Aptiv
IPR2024-00496

UNITED STATES PATENT AND TRADEMARK OFFICE

UNITED STATES DEPARTMENT OF COMMERCE
United States Patent and Trademark Office
Address: COMMISSIONER FOR PATENTS
P.O. Box 1450
Alexandria, Virginia 22313-1450
www.uspto.gov

NOTICE OF ALLOWANCE AND FEE(S) DUE

171991 7590 05/02/2023
Billion & Armitage - Aptiv
7401 Metro Blvd.
Suite 425
Minneapolis, MN 55439

EXAMINER
UNELUS, ERNEST

ART UNIT	PAPER NUMBER
2181	

DATE MAILED: 05/02/2023

APPLICATION NO.	FILING DATE	FIRST NAMED INVENTOR	ATTORNEY DOCKET NO.	CONFIRMATION NO.
17/498,045	10/11/2021	Robert M. Voto	7021.145US5	2854

TITLE OF INVENTION: FLEXIBLE MOBILE DEVICE CONNECTIVITY TO AUTOMOTIVE SYSTEMS WITH USB HUBS

APPLN. TYPE	ENTITY STATUS	ISSUE FEE DUE	PUBLICATION FEE DUE	PREV. PAID ISSUE FEE	TOTAL FEE(S) DUE	DATE DUE
nonprovisional	UNDISCOUNTED	$1200	$0.00	$1200.00	$0	08/02/2023

THE APPLICATION IDENTIFIED ABOVE HAS BEEN EXAMINED AND IS ALLOWED FOR ISSUANCE AS A PATENT. PROSECUTION ON THE MERITS IS CLOSED. THIS NOTICE OF ALLOWANCE IS NOT A GRANT OF PATENT RIGHTS. THIS APPLICATION IS SUBJECT TO WITHDRAWAL FROM ISSUE AT THE INITIATIVE OF THE OFFICE OR UPON PETITION BY THE APPLICANT. SEE 37 CFR 1.313 AND MPEP 1308.

THE ISSUE FEE AND PUBLICATION FEE (IF REQUIRED) MUST BE PAID WITHIN THREE MONTHS FROM THE MAILING DATE OF THIS NOTICE OR THIS APPLICATION SHALL BE REGARDED AS ABANDONED. THIS STATUTORY PERIOD CANNOT BE EXTENDED. SEE 35 U.S.C. 151. THE ISSUE FEE DUE INDICATED ABOVE DOES NOT REFLECT A CREDIT FOR ANY PREVIOUSLY PAID ISSUE FEE IN THIS APPLICATION. IF AN ISSUE FEE HAS PREVIOUSLY BEEN PAID IN THIS APPLICATION (AS SHOWN ABOVE), THE RETURN OF PART B OF THIS FORM WILL BE CONSIDERED A REQUEST TO REAPPLY THE PREVIOUSLY PAID ISSUE FEE TOWARD THE ISSUE FEE NOW DUE.

HOW TO REPLY TO THIS NOTICE:

I. Review the ENTITY STATUS shown above. If the ENTITY STATUS is shown as SMALL or MICRO, verify whether entitlement to that entity status still applies.

If the ENTITY STATUS is the same as shown above, pay the TOTAL FEE(S) DUE shown above.

If the ENTITY STATUS is changed from that shown above, on PART B - FEE(S) TRANSMITTAL, complete section number 5 titled "Change in Entity Status (from status indicated above)".

For purposes of this notice, small entity fees are 40% the amount of undiscounted fees, and micro entity fees are 20% the amount of undiscounted fees.

II. PART B - FEE(S) TRANSMITTAL, or its equivalent, must be completed and returned to the United States Patent and Trademark Office (USPTO) with your ISSUE FEE and PUBLICATION FEE (if required). If you are charging the fee(s) to your deposit account, section "4b" of Part B - Fee(s) Transmittal should be completed. If an equivalent of Part B is filed, a request to reapply a previously paid issue fee must be clearly made, and delays in processing may occur due to the difficulty in recognizing the paper as an equivalent of Part B.

III. All communications regarding this application must give the application number. Please direct all communications prior to issuance to Mail Stop ISSUE FEE unless advised to the contrary.

IMPORTANT REMINDER: Maintenance fees are due in utility patents issuing on applications filed on or after Dec. 12, 1980. It is patentee's responsibility to ensure timely payment of maintenance fees when due. More information is available at www.uspto.gov/PatentMaintenanceFees.

PTOL-85 (Rev. 02/11)

Microchip Ex. 1012, p. 197
Microchip v. Aptiv
IPR2024-00496

PART B - FEE(S) TRANSMITTAL

Complete and send this form, together with applicable fee(s), by mail or fax, or via EFS-Web.

By mail, send to: Mail Stop ISSUE FEE
Commissioner for Patents
P.O. Box 1450
Alexandria, Virginia 22313-1450

By fax, send to: (571)-273-2885

INSTRUCTIONS: This form should be used for transmitting the ISSUE FEE and PUBLICATION FEE (if required). Blocks 1 through 5 should be completed where appropriate. All further correspondence will be mailed to the current correspondence address as indicated unless corrected below or directed otherwise in Block 1, by (a) specifying a new correspondence address; and/or (b) indicating a separate "FEE ADDRESS" for maintenance fee notifications. **Because electronic patent issuance may occur shortly after issue fee payment, any desired continuing application should preferably be filed prior to payment of this issue fee in order not to jeopardize copendency.**

CURRENT CORRESPONDENCE ADDRESS (Note: Use Block 1 for any change of address)

171991 7590 05/02/2023
Billion & Armitage - Aptiv
7401 Metro Blvd.
Suite 425
Minneapolis, MN 55439

Note: A certificate of mailing can only be used for domestic mailings of the Fee(s) Transmittal. This certificate cannot be used for any other accompanying papers. Each additional paper, such as an assignment or formal drawing, must have its own certificate of mailing or transmission.

Certificate of Mailing or Transmission

I hereby certify that this Fee(s) Transmittal is being deposited with the United States Postal Service with sufficient postage for first class mail in an envelope addressed to the Mail Stop ISSUE FEE address above, or being transmitted to the USPTO via EFS-Web or by facsimile to (571) 273-2885, on the date below.

(Typed or printed name)
(Signature)
(Date)

APPLICATION NO.	FILING DATE	FIRST NAMED INVENTOR	ATTORNEY DOCKET NO.	CONFIRMATION NO.
17/498,045	10/11/2021	Robert M. Voto	7021.145US5	2854

TITLE OF INVENTION: FLEXIBLE MOBILE DEVICE CONNECTIVITY TO AUTOMOTIVE SYSTEMS WITH USB HUBS

APPLN. TYPE	ENTITY STATUS	ISSUE FEE DUE	PUBLICATION FEE DUE	PREV. PAID ISSUE FEE	TOTAL FEE(S) DUE	DATE DUE
nonprovisional	UNDISCOUNTED	$1200	$0.00	$1200.00	$0	08/02/2023

EXAMINER	ART UNIT	CLASS-SUBCLASS
UNELUS, ERNEST	2181	710-313000

1. Change of correspondence address or indication of "Fee Address" (37 CFR 1.363).

❑ Change of correspondence address (or Change of Correspondence Address form PTO/AIA/122 or PTO/SB/122) attached.

❑ "Fee Address" indication (or "Fee Address" Indication form PTO/AIA/47 or PTO/SB/47; Rev 03-02 or more recent) attached. **Use of a Customer Number is required.**

2. For printing on the patent front page, list
(1) The names of up to 3 registered patent attorneys or agents OR, alternatively,
(2) The name of a single firm (having as a member a registered attorney or agent) and the names of up to 2 registered patent attorneys or agents. If no name is listed, no name will be printed.

1_____
2_____
3_____

3. ASSIGNEE NAME AND RESIDENCE DATA TO BE PRINTED ON THE PATENT (print or type)

PLEASE NOTE: Unless an assignee is identified below, no assignee data will appear on the patent. If an assignee is identified below, the document must have been previously recorded, or filed for recordation, as set forth in 37 CFR 3.11 and 37 CFR 3.81(a). Completion of this form is NOT a substitute for filing an assignment.

(A) NAME OF ASSIGNEE (B) RESIDENCE: (CITY and STATE OR COUNTRY)

Please check the appropriate assignee category or categories (will not be printed on the patent) : ❑ Individual ❑ Corporation or other private group entity ❑ Government

4a. Fees submitted: ❑Issue Fee ❑Publication Fee (if required)

4b. Method of Payment: *(Please first reapply any previously paid fee shown above)*

❑ Electronic Payment via Patent Center or EFS-Web ❑ Enclosed check ❑ Non-electronic payment by credit card (Attach form PTO-2038)

❑ The Director is hereby authorized to charge the required fee(s), any deficiency, or credit any overpayment to Deposit Account No. _____

5. **Change in Entity Status** (from status indicated above)

❑ Applicant certifying micro entity status. See 37 CFR 1.29

NOTE: Absent a valid certification of Micro Entity Status (see forms PTO/SB/15A and 15B), issue fee payment in the micro entity amount will not be accepted at the risk of application abandonment.

❑ Applicant asserting small entity status. See 37 CFR 1.27

NOTE: If the application was previously under micro entity status, checking this box will be taken to be a notification of loss of entitlement to micro entity status.

❑ Applicant changing to regular undiscounted fee status.

NOTE: Checking this box will be taken to be a notification of loss of entitlement to small or micro entity status, as applicable.

NOTE: This form must be signed in accordance with 37 CFR 1.31 and 1.33. See 37 CFR 1.4 for signature requirements and certifications.

Authorized Signature _____ Date _____

Typed or printed name _____ Registration No. _____

Microchip Ex. 1012, p. 198
Microchip v. Aptiv
IPR2024-00496

UNITED STATES PATENT AND TRADEMARK OFFICE

UNITED STATES DEPARTMENT OF COMMERCE
United States Patent and Trademark Office
Address: COMMISSIONER FOR PATENTS
P.O. Box 1450
Alexandria, Virginia 22313-1450
www.uspto.gov

APPLICATION NO.	FILING DATE	FIRST NAMED INVENTOR	ATTORNEY DOCKET NO.	CONFIRMATION NO.
17/498,045	10/11/2021	Robert M. Voto	7021.145US5	2854

171991 7590 05/02/2023
Billion & Armitage - Aptiv
7401 Metro Blvd.
Suite 425
Minneapolis, MN 55439

EXAMINER
UNELUS, ERNEST

ART UNIT	PAPER NUMBER
2181	

DATE MAILED: 05/02/2023

Determination of Patent Term Adjustment under 35 U.S.C. 154 (b)
(Applications filed on or after May 29, 2000)

The Office has discontinued providing a Patent Term Adjustment (PTA) calculation with the Notice of Allowance.

Section 1(h)(2) of the AIA Technical Corrections Act amended 35 U.S.C. 154(b)(3)(B)(i) to eliminate the requirement that the Office provide a patent term adjustment determination with the notice of allowance. See Revisions to Patent Term Adjustment, 78 Fed. Reg. 19416, 19417 (Apr. 1, 2013). Therefore, the Office is no longer providing an initial patent term adjustment determination with the notice of allowance. The Office will continue to provide a patent term adjustment determination with the Issue Notification Letter that is mailed to applicant approximately three weeks prior to the issue date of the patent, and will include the patent term adjustment on the patent. Any request for reconsideration of the patent term adjustment determination (or reinstatement of patent term adjustment) should follow the process outlined in 37 CFR 1.705.

Any questions regarding the Patent Term Extension or Adjustment determination should be directed to the Office of Patent Legal Administration at (571)-272-7702. Questions relating to issue and publication fee payments should be directed to the Customer Service Center of the Office of Patent Publication at 1-(888)-786-0101 or (571)-272-4200.

PTOL-85 (Rev. 02/11)

Microchip Ex. 1012, p. 199
Microchip v. Aptiv
IPR2024-00496

OMB Clearance and PRA Burden Statement for PTOL-85 Part B

The Paperwork Reduction Act (PRA) of 1995 requires Federal agencies to obtain Office of Management and Budget approval before requesting most types of information from the public. When OMB approves an agency request to collect information from the public, OMB (i) provides a valid OMB Control Number and expiration date for the agency to display on the instrument that will be used to collect the information and (ii) requires the agency to inform the public about the OMB Control Number's legal significance in accordance with 5 CFR 1320.5(b).

The information collected by PTOL-85 Part B is required by 37 CFR 1.311. The information is required to obtain or retain a benefit by the public which is to file (and by the USPTO to process) an application. Confidentiality is governed by 35 U.S.C. 122 and 37 CFR 1.14. This collection is estimated to take 30 minutes to complete, including gathering, preparing, and submitting the completed application form to the USPTO. Time will vary depending upon the individual case. Any comments on the amount of time you require to complete this form and/or suggestions for reducing this burden, should be sent to the Chief Information Officer, U.S. Patent and Trademark Office, U.S. Department of Commerce, P.O. Box 1450, Alexandria, Virginia 22313-1450. DO NOT SEND FEES OR COMPLETED FORMS TO THIS ADDRESS. SEND TO: Commissioner for Patents, P.O. Box 1450, Alexandria, Virginia 22313-1450. Under the Paperwork Reduction Act of 1995, no persons are required to respond to a collection of information unless it displays a valid OMB control number.

Privacy Act Statement

The Privacy Act of 1974 (P.L. 93-579) requires that you be given certain information in connection with your submission of the attached form related to a patent application or patent. Accordingly, pursuant to the requirements of the Act, please be advised that: (1) the general authority for the collection of this information is 35 U.S.C. 2(b)(2); (2) furnishing of the information solicited is voluntary; and (3) the principal purpose for which the information is used by the U.S. Patent and Trademark Office is to process and/or examine your submission related to a patent application or patent. If you do not furnish the requested information, the U.S. Patent and Trademark Office may not be able to process and/or examine your submission, which may result in termination of proceedings or abandonment of the application or expiration of the patent.

The information provided by you in this form will be subject to the following routine uses:

1. The information on this form will be treated confidentially to the extent allowed under the Freedom of Information Act (5 U.S.C. 552) and the Privacy Act (5 U.S.C 552a). Records from this system of records may be disclosed to the Department of Justice to determine whether disclosure of these records is required by the Freedom of Information Act.
2. A record from this system of records may be disclosed, as a routine use, in the course of presenting evidence to a court, magistrate, or administrative tribunal, including disclosures to opposing counsel in the course of settlement negotiations.
3. A record in this system of records may be disclosed, as a routine use, to a Member of Congress submitting a request involving an individual, to whom the record pertains, when the individual has requested assistance from the Member with respect to the subject matter of the record.
4. A record in this system of records may be disclosed, as a routine use, to a contractor of the Agency having need for the information in order to perform a contract. Recipients of information shall be required to comply with the requirements of the Privacy Act of 1974, as amended, pursuant to 5 U.S.C. 552a(m).
5. A record related to an International Application filed under the Patent Cooperation Treaty in this system of records may be disclosed, as a routine use, to the International Bureau of the World Intellectual Property Organization, pursuant to the Patent Cooperation Treaty.
6. A record in this system of records may be disclosed, as a routine use, to another federal agency for purposes of National Security review (35 U.S.C. 181) and for review pursuant to the Atomic Energy Act (42 U.S.C. 218(c)).
7. A record from this system of records may be disclosed, as a routine use, to the Administrator, General Services, or his/her designee, during an inspection of records conducted by GSA as part of that agency's responsibility to recommend improvements in records management practices and programs, under authority of 44 U.S.C. 2904 and 2906. Such disclosure shall be made in accordance with the GSA regulations governing inspection of records for this purpose, and any other relevant (i.e., GSA or Commerce) directive. Such disclosure shall not be used to make determinations about individuals.
8. A record from this system of records may be disclosed, as a routine use, to the public after either publication of the application pursuant to 35 U.S.C. 122(b) or issuance of a patent pursuant to 35 U.S.C. 151. Further, a record may be disclosed, subject to the limitations of 37 CFR 1.14, as a routine use, to the public if the record was filed in an application which became abandoned or in which the proceedings were terminated and which application is referenced by either a published application, an application open to public inspection or an issued patent.
9. A record from this system of records may be disclosed, as a routine use, to a Federal, State, or local law enforcement agency, if the USPTO becomes aware of a violation or potential violation of law or regulation.

Notice of Allowability	Application No. 17/498,045	Applicant(s) Voto et al.	
	Examiner ERNEST UNELUS	Art Unit 2181	AIA (FITF) Status Yes

-- The MAILING DATE of this communication appears on the cover sheet with the correspondence address--

All claims being allowable, PROSECUTION ON THE MERITS IS (OR REMAINS) CLOSED in this application. If not included herewith (or previously mailed), a Notice of Allowance (PTOL-85) or other appropriate communication will be mailed in due course. **THIS NOTICE OF ALLOWABILITY IS NOT A GRANT OF PATENT RIGHTS.** This application is subject to withdrawal from issue at the initiative of the Office or upon petition by the applicant. See 37 CFR 1.313 and MPEP 1308.

1. ☑ This communication is responsive to Examiner's amendment.
   ☐ A declaration(s)/affidavit(s) under **37 CFR 1.130(b)** was/were filed on _____.

2. ☐ An election was made by the applicant in response to a restriction requirement set forth during the interview on _____; the restriction requirement and election have been incorporated into this action.

3. ☑ The allowed claim(s) is/are 1-15 . As a result of the allowed claim(s), you may be eligible to benefit from the **Patent Prosecution Highway** program at a participating intellectual property office for the corresponding application. For more information, please see **http://www.uspto.gov/patents/init_events/pph/index.jsp** or send an inquiry to **PPHfeedback@uspto.gov.**

4. ☐ Acknowledgment is made of a claim for foreign priority under 35 U.S.C. § 119(a)-(d) or (f).

   Certified copies:

   a) ☐ All b) ☐ Some* c) ☐ None of the:

   1. ☐ Certified copies of the priority documents have been received.
   2. ☐ Certified copies of the priority documents have been received in Application No. _____ .
   3. ☐ Copies of the certified copies of the priority documents have been received in this national stage application from the International Bureau (PCT Rule 17.2(a)).

   * Certified copies not received: _____ .

Applicant has THREE MONTHS FROM THE "MAILING DATE" of this communication to file a reply complying with the requirements noted below. Failure to timely comply will result in ABANDONMENT of this application.
THIS THREE-MONTH PERIOD IS NOT EXTENDABLE.

5. ☐ CORRECTED DRAWINGS (as "replacement sheets") must be submitted.
   ☐ including changes required by the attached Examiner's Amendment / Comment or in the Office action of Paper No./Mail Date _____ .

   Identifying indicia such as the application number (see 37 CFR 1.84(c)) should be written on the drawings in the front (not the back) of each sheet. Replacement sheet(s) should be labeled as such in the header according to 37 CFR 1.121(d).

6. ☐ DEPOSIT OF and/or INFORMATION about the deposit of BIOLOGICAL MATERIAL must be submitted. Note the attached Examiner's comment regarding REQUIREMENT FOR THE DEPOSIT OF BIOLOGICAL MATERIAL.

Attachment(s)

1. ☑ Notice of References Cited (PTO-892)
2. ☐ Information Disclosure Statements (PTO/SB/08), Paper No./Mail Date _____.
3. ☐ Examiner's Comment Regarding Requirement for Deposit of Biological Material _____.
4. ☑ Interview Summary (PTO-413), Paper No./Mail Date. 20230421.
5. ☑ Examiner's Amendment/Comment
6. ☑ Examiner's Statement of Reasons for Allowance
7. ☐ Other _____.

/ERNEST UNELUS/
Primary Examiner, Art Unit 2181

Microchip Ex. 1012, p. 201
Microchip v. Aptiv
IPR2024-00496

DETAILED ACTION

The present application, filed on or after March 16, 2013, is being examined under the first inventor to file provisions of the AIA.

EXAMINER'S AMENDMENT

An examiner's amendment to the record appears below. Should the changes and/or additions be unacceptable to applicant, an amendment may be filed as provided by 37 CFR 1.312. To ensure consideration of such an amendment, it MUST be submitted no later than the payment of the issue fee.

Authorization for this examiner's amendment was given in a telephone interview with Mr. Robert Myers (Reg. No. 69,783) on April 21, 2023. The examiner proposed amendments to better place the application in condition for allowance, particularly adding the limitation that prior arts fail to teach. Mr. Myers agreed.

The application has been amended as follows:

Listing of Claims:

1. A method, comprising:

providing a first USB port for communication with a USB host;

providing a second USB port for communicating with a consumer USB device;

providing a signal detection circuit for receiving USB signals from the consumer USB device via the second USB port;

routing the USB signals emanating from the consumer USB device to the first USB port via a routing logic circuit connected directly to a USB bridge and a USB hub connected to the USB bridge in accordance with a determination by the signal detection circuit that the consumer device is operating in a USB host mode, wherein the USB bridge includes a bridge controller, buffers, and a plurality of ports; and

routing the USB signals emanating from the consumer USB device to the first USB port via the routing logic connected directly to the USB hub and thereby bypassing the USB bridge in accordance with a determination by the signal detection circuit that the consumer device is operating in a USB device mode, wherein the USB hub and USB bridge have different components and functionality.

2. The method according to claim 1, wherein the USB host is embedded in an infotainment system.

3. The method according to claim 1, wherein the bypassing the USB bridge is performed by a USB routing switch.

4. The method according to claim 3, wherein the USB routing switch includes the signal detection circuit.

5. A USB communication management method for interconnecting sources of USB signals, the method comprising:

receiving first USB host signals from a first USB host;

receiving second USB signals from a second USB signal source;

determining, via a signal detection circuit, whether the second USB signals emanate from a second USB host;

routing the second USB signals emanating from the second USB host via a routing logic circuit connected directly to a USB bridge and a USB hub connected to the USB bridge to the first USB host, wherein the USB bridge includes a bridge controller, buffers, and a plurality of ports; and

routing the second USB signals not determined to emanate from a USB host via [[a]] the routing logic connected directly to the USB hub to the first USB host ~~while~~ and thereby bypassing the USB bridge, wherein the USB hub and USB bridge have different components and functionality.

6. The USB communication management method according to claim 5, further comprising:

determining whether the second USB signals emanate from a USB device; and

routing the second USB signals determined to emanate from the USB device via a USB hub to the first USB host.

7. The USB communication management method according to claim 5, wherein the first USB host is embedded in an infotainment system.

8. The method according to claim 5, wherein the routing of the second USB signals is performed by a USB routing switch.

9. The method according to claim 8, wherein the USB routing switch includes the signal detection circuit.

10. A USB communication management method for interconnecting sources of USB signals, the method comprising:

receiving a first USB host signal from a first USB host;

receiving a second USB signal from a second USB signal source;

determining whether the second USB signal emanates from a second USB host;

establishing a first communication path via a routing logic circuit connected directly to a USB bridge and a USB hub ~~between~~ connected to the USB bridge to the first USB host and the second USB signal source in accordance with the second signal emanating from the second USB host, wherein the USB bridge includes a bridge controller, buffers, and a plurality of ports; and

establishing a second communication path via [[a]] the routing logic connected directly to the USB hub ~~between~~ to the first USB host to the first USB host and the second USB signal source and thereby bypassing the USB bridge in accordance with the second USB signal not to emanating from the second USB host, wherein the USB hub and USB bridge have different components and functionality.

11. The USB communication management method according to claim 10, further comprising:

determining whether the second USB signal emanates from a USB device; and

establishing the second communication path via a USB hub between the first USB host and the second USB signal source which bypasses the USB bridge in accordance with the second USB signal emanating from the USB device.

12. The method according to claim 10, wherein the second communication path does not include the USB bridge.

13. The USB communication management method according to claim 12, wherein the first USB host is embedded in an infotainment system.

14. The method according to claim 10, wherein the establishment of the second communication path is performed by a USB routing switch.

15. The method according to claim 14, wherein the USB routing switch determines whether the second USB signal emanates from a USB device.

ALLOWABLE SUBJECT MATTER

The primary reason for allowance of claims 1, 5 and 10 in the instant application is that prior arts fail to disclose a method of a dual role USB device, comprising: providing a first USB port for communication with a USB host; providing a second USB port for communicating with a consumer USB device; providing a signal detection circuit for receiving USB signals from the consumer USB device via the second USB port; routing the USB signals emanating from the consumer USB device to the first USB port via a routing logic circuit connected directly to a USB bridge and a USB hub connected to the USB bridge in accordance with a determination by the signal detection circuit that the consumer device is operating in a USB host mode, wherein the USB bridge includes a bridge controller, buffers, and a plurality of ports; and routing the USB signals emanating from the consumer USB device to the first USB port via the routing logic connected directly to the USB hub and thereby bypassing the USB bridge in accordance with a determination by the signal detection circuit that the consumer device is operating in a USB device mode, wherein the USB hub and USB bridge have different components and functionality.

.

The remaining claims 2-4, 6-9 and 11-15 are allowed by virtue of their dependencies on the independent claim. Hence, the examiner has allowed claims 1-15.

Any comments considered necessary by applicant must be submitted no later than the payment of the issue fee and, to avoid processing delays, should preferably accompany the issue fee. Such submissions should be clearly labeled "Comments on Statement of Reasons for Allowance."

CLOSING COMMENTS

Conclusion

a. STATUS OF CLAIMS IN THE APPLICATION

The following is a summary of the treatment and status of all claims in the application as recommended by **M.P.E.P. 707.07(i)**:

a(1) CLAIMS ALOWED IN THE APPLICATION

Per the instant office action, claims 1-15 have been allowed.

b. DIRECTION OF FUTURE CORRESPONDENCES

Any inquiry concerning this communication or earlier communications from the examiner should be directed to Ernest Unelus whose telephone number is (571) 272-8596. The examiner can normally be reached on Monday to Friday 9:00 AM to 5:00 PM.

IMPORTANT NOTE

If attempts to reach the above noted Examiner by telephone are unsuccessful, the Examiner's supervisor, Mr. Idriss Alrobaye, can be reached at the following telephone number: Area Code (571) 270-1023.

The fax phone number for the organization where this application or proceeding is assigned is 571-273-8300. Information regarding the status of an application may be obtained from the Patent Application Information Retrieval (PAIR) system. Status information for published applications may be obtained from either Private PAIR or Public PAIR. Status information for unpublished applications is available through Private PAIR only. For more information about the PMR system, see her//pair-direct.uspto.gov. Should you have questions on access to the Private PAIR system, contact the Electronic Business Center (EBC) at 866-217- 91 97 (toll-free).

/Ernest Unelus/
Primary Examiner
Art Unit 2181

Examiner-Initiated Interview Summary	**Application No.** 17/498,045	**Applicant(s)** Voto et al.		
	Examiner ERNEST UNELUS	**Art Unit** 2181	**AIA (First Inventor to File) Status** Yes	**Page** 1 of 1

All Participants (applicant, applicants representative, PTO personnel)	**Title**	**Type**
ERNEST UNELUS	Primary Examiner	Telephonic
Robert Myers (Reg. No. 69,783)	Attorney of Record	

Date of Interview: 21 April 2023

Issues Discussed:

Proposed Amendment(s)

The primary reason for allowance of claims 1, 5 and 10 in the instant application is that prior arts fail to disclose a method of a dual role USB device, comprising: providing a first USB port for communication with a USB host; providing a second USB port for communicating with a consumer USB device; providing a signal detection circuit for receiving USB signals from the consumer USB device via the second USB port; routing the USB signals emanating from the consumer USB device to the first USB port via a routing logic circuit connected directly to a USB bridge and a USB hub connected to the USB bridge in accordance with a determination by the signal detection circuit that the consumer device is operating in a USB host mode, wherein the USB bridge includes a bridge controller, buffers, and a plurality of ports; and routing the USB signals emanating from the consumer USB device to the first USB port via the routing logic connected directly to the USB hub and thereby bypassing the USB bridge in accordance with a determination by the signal detection circuit that the consumer device is operating in a USB device mode, wherein the USB hub and USB bridge have different components and functionality.

/ERNEST UNELUS/ Primary Examiner, Art Unit 2181	

Applicant is reminded that a complete written statement as to the substance of the interview must be made of record in the application file. It is the applicants responsibility to provide the written statement, unless the interview was initiated by the Examiner and the Examiner has indicated that a written summary will be provided. See MPEP 713.04
Please further see:
MPEP 713.04
Title 37 Code of Federal Regulations (CFR) § 1.133 Interviews, paragraph (b)
37 CFR § 1.2 Business to be transacted in writing

Applicant recordation instructions: It is not necessary for applicant to provide a separate record of the substance of interview.

Examiner recordation instructions: Examiners must summarize the substance of any interview of record. A complete and proper recordation of the substance of an interview should include the items listed in MPEP 713.04 for complete and proper recordation including the identification of the general thrust of each argument or issue discussed, a general indication of any other pertinent matters discussed regarding patentability and the general results or outcome of the interview, to include an indication as to whether or not agreement was reached on the issues raised.

Microchip Ex. 1012, p. 208
Microchip v. Aptiv
IPR2024-00496

Notice of References Cited	Application/Control No. 17/498,045	Applicant(s)/Patent Under Reexamination Voto et al.	
	Examiner ERNEST UNELUS	Art Unit 2181	Page 1 of 1

U.S. PATENT DOCUMENTS

*		Document Number Country Code-Number-Kind Code	Date MM-YYYY	Name	CPC Classification	US Classification
*	A	US-20090268743-A1	10-2009	Chang; Chi-Tung	G06F13/4045	370/401
	B					
	C					
	D					
	E					
	F					
	G					
	H					
	I					
	J					
	K					
	L					
	M					

FOREIGN PATENT DOCUMENTS

*		Document Number Country Code-Number-Kind Code	Date MM-YYYY	Country	Name	CPC Classification
	N					
	O					
	P					
	Q					
	R					
	S					
	T					

NON-PATENT DOCUMENTS

*		Include as applicable: Author, Title Date, Publisher, Edition or Volume, Pertinent Pages)
	U	
	V	
	W	
	X	

*A copy of this reference is not being furnished with this Office action. (See MPEP § 707.05(a).)
Dates in MM-YYYY format are publication dates. Classifications may be US or foreign.

Microchip Ex. 1012, p. 209
Microchip v. Aptiv
IPR2024-00496

Search Notes	Application/Control No.	Applicant(s)/Patent Under Reexamination
	17/498,045	Voto et al.
	Examiner	**Art Unit**
	ERNEST UNELUS	2181

CPC - Searched*		
Symbol	**Date**	**Examiner**
G06F 13/4022, 385, 4045, 4282; G06F 2213/4004, 3812 and G06F 11/3051	09/09/2022	E.U.
G06F 13/4022, 385, 4045, 4282; G06F 2213/4004, 3812 and G06F 11/3051	04/21/2023	E.U.

CPC Combination Sets - Searched*		
Symbol	**Date**	**Examiner**

US Classification - Searched*			
Class	**Subclass**	**Date**	**Examiner**

* See search history printout included with this form or the SEARCH NOTES box below to determine the scope of the search.

Search Notes		
Search Notes	**Date**	**Examiner**
PE2E SEARCH: US-PGPUB; USPAT; USOCR; EPO; JPO	09/09/2022	E.U.
Inventor search utilizing PE2E SEARCH and DAV	09/09/2022	E.U.
Limited text search of G06F 13/4022, 385, 4045, 4282; G06F 2213/4004, 3812 and G06F 11/3051	09/09/2022	E.U.
PE2E SEARCH: US-PGPUB; USPAT; USOCR; EPO; JPO	04/21/2023	E.U.
Inventor search utilizing PE2E SEARCH and DAV	04/21/2023	E.U.
Limited text search of G06F 13/4022, 385, 4045, 4282; G06F 2213/4004, 3812 and G06F 11/3051	04/21/2023	E.U.

/ERNEST UNELUS/ Primary Examiner, Art Unit 2181	

Microchip Ex. 1012, p. 210
Microchip v. Aptiv
IPR2024-00496

Search Notes	Application/Control No.	Applicant(s)/Patent Under Reexamination
	17/498,045	Voto et al.
	Examiner	Art Unit
	ERNEST UNELUS	2181

Interference Search			
US Class/CPC Symbol	US Subclass/CPC Group	Date	Examiner
G06F	13/385	04/21/2023	E.U.

/ERNEST UNELUS/ Primary Examiner, Art Unit 2181	

Microchip Ex. 1012, p. 211
Microchip v. Aptiv
IPR2024-00496

Issue Classification	Application/Control No.	Applicant(s)/Patent Under Reexamination
	17/498,045	Voto et al.
	Examiner	**Art Unit**
	ERNEST UNELUS	2181

CPC						
Symbol					**Type**	**Version**
G06F	/	13	/	385	F	2013-01-01
G06F	/	13	/	4022	I	2013-01-01
G06F	/	13	/	4045	I	2013-01-01
G06F	/	13	/	4282	I	2013-01-01
G06F	/	2213	/	4004	A	2013-01-01
G06F	/	2213	/	0042	A	2013-01-01
G06F	/	2213	/	3812	A	2013-01-01

CPC Combination Sets								
Symbol					**Type**	**Set**	**Ranking**	**Version**
	/		/					

NONE (Assistant Examiner) (Date)		**Total Claims Allowed:** 15	
/ERNEST UNELUS/ Primary Examiner, Art Unit 2181 (Primary Examiner) (Date)		O.G. Print Claim(s) 1	O.G. Print Figure 6

U.S. Patent and Trademark Office Part of Paper No.: 20230421

Microchip Ex. 1012, p. 212
Microchip v. Aptiv
IPR2024-00496

Issue Classification	Application/Control No.	Applicant(s)/Patent Under Reexamination
	17/498,045	Voto et al.
	Examiner	**Art Unit**
	ERNEST UNELUS	2181

INTERNATIONAL CLASSIFICATION				
CLAIMED				
G06F	/	13	/	38

NON-CLAIMED				
	/		/	

US ORIGINAL CLASSIFICATION	
CLASS	**SUBCLASS**

CROSS REFERENCES(S)						
CLASS	**SUBCLASS (ONE SUBCLASS PER BLOCK)**					

NONE (Assistant Examiner) (Date)	**Total Claims Allowed:** 15	
/ERNEST UNELUS/ Primary Examiner, Art Unit 2181 (Primary Examiner) (Date)	O.G. Print Claim(s) 1	O.G. Print Figure 6

U.S. Patent and Trademark Office Part of Paper No.: 20230421

Microchip Ex. 1012, p. 213
Microchip v. Aptiv
IPR2024-00496

Issue Classification	Application/Control No.	Applicant(s)/Patent Under Reexamination
	17/498,045	Voto et al.
	Examiner	**Art Unit**
	ERNEST UNELUS	2181

☐ Claims renumbered in the same order as presented by applicant ☐ CPA ☑ T.D. ☐ R.1.47

CLAIMS

Final	Original	Final	Original	Final	Original	Final	Original	Final	Original	Final	Original	Final	Original	Final	Original
1	1	10	10												
2	2	11	11												
3	3	12	12												
4	4	13	13												
5	5	14	14												
6	6	15	15												
7	7														
8	8														
9	9														

NONE (Assistant Examiner) (Date)		**Total Claims Allowed:** 15	
/ERNEST UNELUS/ Primary Examiner, Art Unit 2181 (Primary Examiner) (Date)		O.G. Print Claim(s) 1	O.G. Print Figure 6

U.S. Patent and Trademark Office Part of Paper No.: 20230421

Microchip Ex. 1012, p. 214
Microchip v. Aptiv
IPR2024-00496

Index of Claims	Application/Control No.	Applicant(s)/Patent Under Reexamination
	17/498,045	Voto et al.
	Examiner	**Art Unit**
	ERNEST UNELUS	2181

✓	Rejected	-	Cancelled	N	Non-Elected	A	Appeal
=	Allowed	÷	Restricted	I	Interference	O	Objected

CLAIMS

☐ Claims renumbered in the same order as presented by applicant ☐ CPA ☑ T.D. ☐ R.1.47

CLAIM		DATE								
Final	Original	09/09/2022	12/17/2022	04/21/2023						
1	1	✓	=	=						
2	2	✓	=	=						
3	3	✓	=	=						
4	4	✓	=	=						
5	5	✓	=	=						
6	6	✓	=	=						
7	7	✓	=	=						
8	8	✓	=	=						
9	9	✓	=	=						
10	10	✓	=	=						
11	11	✓	=	=						
12	12	✓	=	=						
13	13	✓	=	=						
14	14	✓	=	=						
15	15	✓	=	=						

Microchip Ex. 1012, p. 215
Microchip v. Aptiv
IPR2024-00496

Bibliographic Data

Application No: 17/498,045

Foreign Priority claimed: ○ Yes ◉ No

35 USC 119 (a-d) conditions met: ☐ Yes ☑ No ☐ Met After Allowance

Verified and Acknowledged: /ERNEST UNELUS/ (Examiner's Signature) E.U. (Initials)

Title: FLEXIBLE MOBILE DEVICE CONNECTIVITY TO AUTOMOTIVE SYSTEMS WITH USB HUBS

FILING or 371(c) DATE	CLASS	GROUP ART UNIT	ATTORNEY DOCKET NO.
10/11/2021 **RULE**	710	2181	7021.145US5

APPLICANTS

Aptiv Technologies Limited, St. Michael, BARBADOS

INVENTORS

Robert M. Voto, Clarkston, MI, UNITED STATES

Shyambabu Yeda, Rochester Hills, MI, UNITED STATES

Craig Petku, Clarkston, MI, UNITED STATES

CONTINUING DATA

This application is a CON of 16660083 10/22/2019 PAT 11176072

16660083 is a CON of 15441775 02/24/2017 PAT 10545899

15441775 is a CON of 15268728 09/19/2016 PAT 9619420

15268728 is a CON of 14487947 09/16/2014 PAT 9460037

14487947 has PRO of 61882915 09/26/2013

FOREIGN APPLICATIONS

IF REQUIRED, FOREIGN LICENSE GRANTED**

10/20/2021

STATE OR COUNTRY

UNITED STATES

ADDRESS

Billion & Armitage - Aptiv
7401 Metro Blvd.
Suite 425
Minneapolis, MN 55439
UNITED STATES

FILING FEE RECEIVED

$1,820

PE2E SEARCH - Search History (Prior Art)

Ref #	Hits	Search Query	DBs	Default Operator	Plurals	British Equivalents	Time Stamp
L35	36	(G06F3/0622,0637,067 OR G06F11/3051 OR G06F2213/4004,3812). cpc. AND mode WITH usb WITH (downstream OR upstream OR switch$3 OR mux OR multiplex$3) WITH (port OR plug OR interface) WITH hub AND hub WITH (switch$3 OR mux OR multiplex$3) WITH mode	(US-PGPUB; USPAT; USOCR)	OR	ON	ON	2023/04/21 04:28 PM
L37	1	"7502878".pn.	(US-PGPUB; USPAT; USOCR)	OR	ON	ON	2023/04/21 04:29 PM
L38	1	"20220027301" AND detection NEAR circuit	(US-PGPUB; USPAT; USOCR)	OR	ON	ON	2023/04/21 04:29 PM
L39	1385	usb WITH (downstream OR upstream) WITH (port OR plug OR interface) WITH hub	(US-PGPUB; USPAT; USOCR)	OR	ON	ON	2023/04/21 04:29 PM
L40	188	mode WITH usb WITH (downstream OR upstream OR switch$3 OR mux OR multiplex$3) WITH (port OR plug OR interface) WITH hub	(US-PGPUB; USPAT; USOCR)	OR	ON	ON	2023/04/21 04:30 PM
L41	53	(G06F3/0622,0637,067 OR G06F11/3051 OR G06F2213/4004,3812,0042).cpc. AND mode WITH usb WITH (downstream OR upstream OR switch$3 OR mux OR multiplex$3) WITH (port OR plug OR interface) WITH hub AND hub WITH (switch$3 OR mux OR multiplex$3) WITH mode	(US-PGPUB; USPAT; USOCR)	OR	ON	ON	2023/04/21 04:32 PM
L42	52	dual WITH usb WITH (downstream OR upstream OR switch$3 OR mux OR multiplex$3 OR hub) WITH (port OR plug OR interface OR connector) AND hub WITH (switch$3 OR mux OR	(US-PGPUB; USPAT; USOCR)	OR	ON	ON	2023/04/21 04:33 PM

Microchip Ex. 1012, p. 218
Microchip v. Aptiv
IPR2024-00496

		multiplex$3) WITH (mode OR state OR role)					
L43	9415	G06F13/385.cpc.	(US-PGPUB; USPAT; USOCR)	OR	ON	ON	2023/04/21 04:33 PM
L44	7827	G06F13/4022.cpc.	(US-PGPUB; USPAT; USOCR)	OR	ON	ON	2023/04/21 04:33 PM
L45	7827	G06F13/4022.cpc.	(US-PGPUB; USPAT; USOCR)	OR	ON	ON	2023/04/21 04:33 PM
L46	1843302	Shyambabu Yeda.in. OR Robert Voto.in. OR Craig Petku.in.	(US-PGPUB; USPAT; USOCR)	OR	ON	ON	2023/04/21 04:34 PM
L47	18	46 AND usb WITH (downstream OR upstream OR plurality OR multiple OR second OR another) WITH (port OR plug interface) WITH (hub OR adapt$3) AND bypass$4 WITH (host OR master OR initiat$3 OR slave) WITH (peripheral OR device OR port OR plug interface)	(US-PGPUB; USPAT; USOCR)	OR	ON	ON	2023/04/21 04:34 PM

PE2E SEARCH - Search History (Interference)

There are no Interference searches to show.

PART B - FEE(S) TRANSMITTAL

Complete and send this form, together with applicable fee(s), by mail or fax, or via EFS-Web.

By mail, send to: Mail Stop ISSUE FEE
Commissioner for Patents
P.O. Box 1450
Alexandria, Virginia 22313-1450

By fax, send to: (571)-273-2885

INSTRUCTIONS: This form should be used for transmitting the ISSUE FEE and PUBLICATION FEE (if required). Blocks 1 through 5 should be completed where appropriate. All further correspondence will be mailed to the current correspondence address as indicated unless corrected below or directed otherwise in Block 1, by (a) specifying a new correspondence address; and/or (b) indicating a separate "FEE ADDRESS" for maintenance fee notifications. **Because electronic patent issuance may occur shortly after issue fee payment, any desired continuing application should preferably be filed prior to payment of this issue fee in order not to jeopardize copendency.**

CURRENT CORRESPONDENCE ADDRESS (Note: Use Block 1 for any change of address)

171991 7590 05/02/2023
Billion & Armitage - Aptiv
7401 Metro Blvd.
Suite 425
Minneapolis, MN 55439

OPAP LHDT-SV-5 MAY 05 2023 PATENT & TRADEMARK OFFICE

Note: A certificate of mailing can only be used for domestic mailings of the Fee(s) Transmittal. This certificate cannot be used for any other accompanying papers. Each additional paper, such as an assignment or formal drawing, must have its own certificate of mailing or transmission.

Certificate of Mailing or Transmission

I hereby certify that this Fee(s) Transmittal is being deposited with the United States Postal Service with sufficient postage for first class mail in an envelope addressed to the Mail Stop ISSUE FEE address above, or being transmitted to the USPTO via EFS-Web or by facsimile to (571) 273-2885, on the date below.

Rebecca Krueger	(Typed or printed name)
/Rebecca Krueger/	(Signature)
May 5, 2023	(Date)

APPLICATION NO.	FILING DATE	FIRST NAMED INVENTOR	ATTORNEY DOCKET NO.	CONFIRMATION NO.
17/498,045	10/11/2021	Robert M. Voto	7021.145US5	2854

TITLE OF INVENTION: FLEXIBLE MOBILE DEVICE CONNECTIVITY TO AUTOMOTIVE SYSTEMS WITH USB HUBS

APPLN. TYPE	ENTITY STATUS	ISSUE FEE DUE	PUBLICATION FEE DUE	PREV. PAID ISSUE FEE	TOTAL FEE(S) DUE	DATE DUE
nonprovisional	UNDISCOUNTED	$1200	$0.00	$1200.00	$0	08/02/2023

EXAMINER	ART UNIT	CLASS-SUBCLASS
UNELUS, ERNEST	2181	710-313000

1. Change of correspondence address or indication of "Fee Address" (37 CFR 1.363).

☐ Change of correspondence address (or Change of Correspondence Address form PTO/AIA/122 or PTO/SB/122) attached.

☒ "Fee Address" indication (or "Fee Address" Indication form PTO/AIA/47 or PTO/SB/47; Rev 03-02 or more recent) attached. **Use of a Customer Number is required.**

2. For printing on the patent front page, list
(1) The names of up to 3 registered patent attorneys or agents OR, alternatively,
(2) The name of a single firm (having as a member a registered attorney or agent) and the names of up to 2 registered patent attorneys or agents. If no name is listed, no name will be printed.

1 Billion & Armitage
2
3

3. ASSIGNEE NAME AND RESIDENCE DATA TO BE PRINTED ON THE PATENT (print or type)

PLEASE NOTE: Unless an assignee is identified below, no assignee data will appear on the patent. If an assignee is identified below, the document must have been previously recorded, or filed for recordation, as set forth in 37 CFR 3.11 and 37 CFR 3.81(a). Completion of this form is NOT a substitute for filing an assignment.

(A) NAME OF ASSIGNEE
APTIV TECHNOLOGIES LIMITED

(B) RESIDENCE: (CITY and STATE OR COUNTRY)
ST. MICHAEL, BARBADOS

Please check the appropriate assignee category or categories (will not be printed on the patent) : ☐ Individual ☒ Corporation or other private group entity ☐ Government

4a. Fees submitted: ☒ Issue Fee ☐ Publication Fee (if required)

4b. Method of Payment: *(Please first reapply any previously paid fee shown above)*

☒ Electronic Payment via Patent Center or EFS-Web ☐ Enclosed check ☐ Non-electronic payment by credit card (Attach form PTO-2038)

☒ The Director is hereby authorized to charge the required fee(s), any deficiency, or credit any overpayment to Deposit Account No. 50-3141

5. **Change in Entity Status** (from status indicated above)

☐ Applicant certifying micro entity status. See 37 CFR 1.29

☐ Applicant asserting small entity status. See 37 CFR 1.27

☐ Applicant changing to regular undiscounted fee status.

NOTE: Absent a valid certification of Micro Entity Status (see forms PTO/SB/15A and 15B), issue fee payment in the micro entity amount will not be accepted at the risk of application abandonment.

NOTE: If the application was previously under micro entity status, checking this box will be taken to be a notification of loss of entitlement to micro entity status.

NOTE: Checking this box will be taken to be a notification of loss of entitlement to small or micro entity status, as applicable.

NOTE: This form must be signed in accordance with 37 CFR 1.31 and 1.33. See 37 CFR 1.4 for signature requirements and certifications.

Authorized Signature /Robert Myers/ Date 2023-05-05

Typed or printed name Robert Myers Registration No. 69,783

PTOL-85 Part B (08-18) Approved for use through 01/31/2020 OMB 0651-0033 U.S. Patent and Trademark Office; U.S. DEPARTMENT OF COMMERCE

Microchip Ex. 1012, p. 220
Microchip v. Aptiv
IPR2024-00496

Doc Code: MFEE.C.AD
Document Description: Maintenance Fee Address Change

PTO/AIA/47 (12-20)
Approved for use through 09/30/2021. OMB 0651-0016
U.S. Patent and Trademark Office; U.S. DEPARTMENT OF COMMERCE
Under the Paperwork Reduction Act of 1995, no person is required to respond to a collection of information unless it displays a valid OMB control number.

"FEE ADDRESS" INDICATION FORM

Address to:
Mail Stop Maintenance Fee
Director of the United States
Patent and Trademark Office
P.O. Box 1450
Alexandria, VA 22313-1450

-OR-

Fax to:
571-273-6500

INSTRUCTIONS: The issue fee must have been paid for the application(s) listed on this form. In addition, only an address represented by a Customer Number can be established as the fee address for maintenance fee purposes (hereafter, fee address). A fee address should be established when correspondence related to maintenance fees should be mailed to a different address than the correspondence address for the application.

When to check the first box below: If you have a Customer Number to represent the fee address.

When to check the second box below: If you have no Customer Number representing the desired fee address, in which case a completed Request for Customer Number (PTO/SB/125) must be attached to this form. For more information on Customer Numbers, see the Manual of Patent Examining Procedure (MPEP) § 403.

For the following listed application(s), please recognize as the "Fee Address" under the provisions of 37 CFR 1.363 the address associated with:

☑ Customer Number: 22851

OR

☐ The attached Request for Customer Number form (PTO/SB/125)

PATENT NUMBER (if known)	APPLICATION NUMBER
	17/498,045

Completed by (check one):

☐ Applicant/Inventor

☑ Attorney or Agent of record 69,783
Reg. No.

☐ Assignee of record of the entire interest. See 37 CFR 3.71. Statement under 37 CFR 3.73(c) (Form PTO/AIA/96) is enclosed or was filed on

(Date)

/Robert Myers/
Signature

Robert Myers
Typed or printed name

(952) 697-2641
Requester's telephone number

2023-05-05
Date

NOTE: Signatures of all the inventors or assignees of record of the entire interest or their representative(s) are required. If the assignee is a juristic entity, this form must be signed by a patent practitioner (attorney or agent) of record. Submit multiple forms if more than one signature is required, see below*.

☑ *Total of 1 forms are submitted

This collection of information is required by 37 CFR 1.363. The information is required to obtain or retain a benefit by the public, which is to indicate (and for the USPTO to process) a fee address. Confidentiality is governed by 35 U.S.C. 122 and 37 CFR 1.11 and 1.14. This collection is estimated to take 5 minutes to complete, including gathering, preparing, and submitting the completed form to the USPTO. Time will vary depending upon the individual case. Any comments on the amount of time you require to complete this form and/or suggestions for reducing this burden, should be sent to the Chief Information Officer, U.S. Patent and Trademark Office, U.S. Department of Commerce, P.O. Box 1450, Alexandria, VA 22313-1450. DO NOT SEND COMPLETED FORMS TO THE PREVIOUS ADDRESS. **SEND COMPLETED FORMS TO: Mail Stop Maintenance Fee, Director of the United States Patent and Trademark Office, P.O. Box 1450, Alexandria, VA 22313-1450.**
If you need assistance in completing the form, call 1-800-PTO-9199 and select option 2.

Privacy Act Statement

The **Privacy Act of 1974 (P.L. 93-579)** requires that you be given certain information in connection with your submission of the attached form related to a patent application or patent. Accordingly, pursuant to the requirements of the Act, please be advised that: (1) the general authority for the collection of this information is 35 U.S.C. 2(b)(2); (2) furnishing of the information solicited is voluntary; and (3) the principal purpose for which the information is used by the U.S. Patent and Trademark Office is to process and/or examine your submission related to a patent application or patent. If you do not furnish the requested information, the U.S. Patent and Trademark Office may not be able to process and/or examine your submission, which may result in termination of proceedings or abandonment of the application or expiration of the patent.

The information provided by you in this form will be subject to the following routine uses:

1. The information on this form will be treated confidentially to the extent allowed under the Freedom of Information Act (5 U.S.C. 552) and the Privacy Act (5 U.S.C 552a). Records from this system of records may be disclosed to the Department of Justice to determine whether disclosure of these records is required by the Freedom of Information Act.
2. A record from this system of records may be disclosed, as a routine use, in the course of presenting evidence to a court, magistrate, or administrative tribunal, including disclosures to opposing counsel in the course of settlement negotiations.
3. A record in this system of records may be disclosed, as a routine use, to a Member of Congress submitting a request involving an individual, to whom the record pertains, when the individual has requested assistance from the Member with respect to the subject matter of the record.
4. A record in this system of records may be disclosed, as a routine use, to a contractor of the Agency having need for the information in order to perform a contract. Recipients of information shall be required to comply with the requirements of the Privacy Act of 1974, as amended, pursuant to 5 U.S.C. 552a(m).
5. A record related to an International Application filed under the Patent Cooperation Treaty in this system of records may be disclosed, as a routine use, to the International Bureau of the World Intellectual Property Organization, pursuant to the Patent Cooperation Treaty.
6. A record in this system of records may be disclosed, as a routine use, to another federal agency for purposes of National Security review (35 U.S.C. 181) and for review pursuant to the Atomic Energy Act (42 U.S.C. 218(c)).
7. A record from this system of records may be disclosed, as a routine use, to the Administrator, General Services, or his/her designee, during an inspection of records conducted by GSA as part of that agency's responsibility to recommend improvements in records management practices and programs, under authority of 44 U.S.C. 2904 and 2906. Such disclosure shall be made in accordance with the GSA regulations governing inspection of records for this purpose, and any other relevant (*i.e.*, GSA or Commerce) directive. Such disclosure shall not be used to make determinations about individuals.
8. A record from this system of records may be disclosed, as a routine use, to the public after either publication of the application pursuant to 35 U.S.C. 122(b) or issuance of a patent pursuant to 35 U.S.C. 151. Further, a record may be disclosed, subject to the limitations of 37 CFR 1.14, as a routine use, to the public if the record was filed in an application which became abandoned or in which the proceedings were terminated and which application is referenced by either a published application, an application open to public inspection or an issued patent.
9. A record from this system of records may be disclosed, as a routine use, to a Federal, State, or local law enforcement agency, if the USPTO becomes aware of a violation or potential violation of law or regulation.

Electronic Acknowledgement Receipt

EFS ID:	47958843
Application Number:	17498045
International Application Number:	
Confirmation Number:	2854
Title of Invention:	FLEXIBLE MOBILE DEVICE CONNECTIVITY TO AUTOMOTIVE SYSTEMS WITH USB HUBS
First Named Inventor/Applicant Name:	Robert M. Voto
Customer Number:	171991
Filer:	Robert James Myers/Rebecca Krueger
Filer Authorized By:	Robert James Myers
Attorney Docket Number:	7021.145US5
Receipt Date:	05-MAY-2023
Filing Date:	11-OCT-2021
Time Stamp:	15:06:18
Application Type:	Utility under 35 USC 111(a)

Payment information:

Submitted with Payment	no

File Listing:

Document Number	Document Description	File Name	File Size(Bytes)/ Message Digest	Multi Part /.zip	Pages (if appl.)
1	Issue Fee Payment (PTO-85B)	7021-145US5-Issue-Fee-2.pdf	126486 a2a212afc2aad3dca34bd741ee4f948a36da04b3	no	1

Warnings:

Information:					
2	Maintenance Fee Address Change	7021-145US5_FEE-ADDRESS-2.pdf	231269 fdd0f54d2bd036c6a3c38370e3c989c7c5642b25	no	2
Warnings:					
Information:					
			Total Files Size (in bytes):	357755	

This Acknowledgement Receipt evidences receipt on the noted date by the USPTO of the indicated documents, characterized by the applicant, and including page counts, where applicable. It serves as evidence of receipt similar to a Post Card, as described in MPEP 503.

New Applications Under 35 U.S.C. 111
If a new application is being filed and the application includes the necessary components for a filing date (see 37 CFR 1.53(b)-(d) and MPEP 506), a Filing Receipt (37 CFR 1.54) will be issued in due course and the date shown on this Acknowledgement Receipt will establish the filing date of the application.
National Stage of an International Application under 35 U.S.C. 371
If a timely submission to enter the national stage of an international application is compliant with the conditions of 35 U.S.C. 371 and other applicable requirements a Form PCT/DO/EO/903 indicating acceptance of the application as a national stage submission under 35 U.S.C. 371 will be issued in addition to the Filing Receipt, in due course.
New International Application Filed with the USPTO as a Receiving Office
If a new international application is being filed and the international application includes the necessary components for an international filing date (see PCT Article 11 and MPEP 1810), a Notification of the International Application Number and of the International Filing Date (Form PCT/RO/105) will be issued in due course, subject to prescriptions concerning national security, and the date shown on this Acknowledgement Receipt will establish the international filing date of the application.

PART B - FEE(S) TRANSMITTAL

Complete and send this form, together with applicable fee(s), by mail or fax, or via EFS-Web.

By mail, send to: Mail Stop ISSUE FEE
Commissioner for Patents
P.O. Box 1450
Alexandria, Virginia 22313-1450

By fax, send to: (571)-273-2885

INSTRUCTIONS: This form should be used for transmitting the ISSUE FEE and PUBLICATION FEE (if required). Blocks 1 through 5 should be completed where appropriate. All further correspondence will be mailed to the current correspondence address as indicated unless corrected below or directed otherwise in Block 1, by (a) specifying a new correspondence address; and/or (b) indicating a separate "FEE ADDRESS" for maintenance fee notifications. **Because electronic patent issuance may occur shortly after issue fee payment, any desired continuing application should preferably be filed prior to payment of this issue fee in order not to jeopardize copendency.**

CURRENT CORRESPONDENCE ADDRESS (Note: Use Block 1 for any change of address)

171991 7590 05/02/2023
Billion & Armitage - Aptiv
7401 Metro Blvd.
Suite 425
Minneapolis, MN 55439

Note: A certificate of mailing can only be used for domestic mailings of the Fee(s) Transmittal. This certificate cannot be used for any other accompanying papers. Each additional paper, such as an assignment or formal drawing, must have its own certificate of mailing or transmission.

Certificate of Mailing or Transmission

I hereby certify that this Fee(s) Transmittal is being deposited with the United States Postal Service with sufficient postage for first class mail in an envelope addressed to the Mail Stop ISSUE FEE address above, or being transmitted to the USPTO via EFS-Web or by facsimile to (571) 273-2885, on the date below.

Rebecca Krueger	(Typed or printed name)
/Rebecca Krueger/	(Signature)
May 5, 2023	(Date)

APPLICATION NO.	FILING DATE	FIRST NAMED INVENTOR	ATTORNEY DOCKET NO.	CONFIRMATION NO.
17/498,045	10/11/2021	Robert M. Voto	7021.145US5	2854

TITLE OF INVENTION: FLEXIBLE MOBILE DEVICE CONNECTIVITY TO AUTOMOTIVE SYSTEMS WITH USB HUBS

APPLN. TYPE	ENTITY STATUS	ISSUE FEE DUE	PUBLICATION FEE DUE	PREV. PAID ISSUE FEE	TOTAL FEE(S) DUE	DATE DUE
nonprovisional	UNDISCOUNTED	$1200	$0.00	$1200.00	$0	08/02/2023

EXAMINER	ART UNIT	CLASS-SUBCLASS
UNELUS, ERNEST	2181	710-313000

1. Change of correspondence address or indication of "Fee Address" (37 CFR 1.363).

☐ Change of correspondence address (or Change of Correspondence Address form PTO/AIA/122 or PTO/SB/122) attached.

☒ "Fee Address" indication (or "Fee Address" Indication form PTO/AIA/47 or PTO/SB/47; Rev 03-02 or more recent) attached. **Use of a Customer Number is required.**

2. For printing on the patent front page, list
(1) The names of up to 3 registered patent attorneys or agents OR, alternatively,
(2) The name of a single firm (having as a member a registered attorney or agent) and the names of up to 2 registered patent attorneys or agents. If no name is listed, no name will be printed.

1 Billion & Armitage
2
3

3. ASSIGNEE NAME AND RESIDENCE DATA TO BE PRINTED ON THE PATENT (print or type)

PLEASE NOTE: Unless an assignee is identified below, no assignee data will appear on the patent. If an assignee is identified below, the document must have been previously recorded, or filed for recordation, as set forth in 37 CFR 3.11 and 37 CFR 3.81(a). Completion of this form is NOT a substitute for filing an assignment.

(A) NAME OF ASSIGNEE: APTIV TECHNOLOGIES LIMITED

(B) RESIDENCE: (CITY and STATE OR COUNTRY): ST. MICHAEL, BARBADOS

Please check the appropriate assignee category or categories (will not be printed on the patent) : ☐ Individual ☒ Corporation or other private group entity ☐ Government

4a. Fees submitted: ☒ Issue Fee ☐ Publication Fee (if required)

4b. Method of Payment: *(Please first reapply any previously paid fee shown above)*

☒ Electronic Payment via Patent Center or EFS-Web ☐ Enclosed check ☐ Non-electronic payment by credit card (Attach form PTO-2038)

☒ The Director is hereby authorized to charge the required fee(s), any deficiency, or credit any overpayment to Deposit Account No. 50-3141

5. **Change in Entity Status** (from status indicated above)

☐ Applicant certifying micro entity status. See 37 CFR 1.29

☐ Applicant asserting small entity status. See 37 CFR 1.27

☐ Applicant changing to regular undiscounted fee status.

NOTE: Absent a valid certification of Micro Entity Status (see forms PTO/SB/15A and 15B), issue fee payment in the micro entity amount will not be accepted at the risk of application abandonment.

NOTE: If the application was previously under micro entity status, checking this box will be taken to be a notification of loss of entitlement to micro entity status.

NOTE: Checking this box will be taken to be a notification of loss of entitlement to small or micro entity status, as applicable.

NOTE: This form must be signed in accordance with 37 CFR 1.31 and 1.33. See 37 CFR 1.4 for signature requirements and certifications.

Authorized Signature /Robert Myers/ Date 2023-05-05

Typed or printed name Robert Myers Registration No. 69,783

PTOL-85 Part B (08-18) Approved for use through 01/31/2020 OMB 0651-0033 U.S. Patent and Trademark Office; U.S. DEPARTMENT OF COMMERCE

Microchip Ex. 1012, p. 225
Microchip v. Aptiv
IPR2024-00496

United States Patent and Trademark Office

Office of the Chief Financial Officer

Document Code:WFEE

User :Cynthia Chau

Sale Accounting Date:05/08/2023

Sale Item Reference Number	Effective Date
17498045	05/05/2023

Document Number	Fee Code	Fee Code Description	Amount Paid	Payment Method
I202358C52128103	1501	UTILITY APPL ISSUE FEE	$1,200.00	Salea

UNITED STATES PATENT AND TRADEMARK OFFICE

UNITED STATES DEPARTMENT OF COMMERCE
United States Patent and Trademark Office
Address: COMMISSIONER FOR PATENTS
P.O. Box 1450
Alexandria, Virginia 22313-1450
www.uspto.gov

APPLICATION NO.	ISSUE DATE	PATENT NO.	ATTORNEY DOCKET NO.	CONFIRMATION NO.
17/498,045	06/20/2023	11681643	7021.145US5	2854

171991 7590 05/31/2023

Billion & Armitage - Aptiv
7401 Metro Blvd.
Suite 425
Minneapolis, MN 55439

ISSUE NOTIFICATION

The projected patent number and issue date are specified above. The patent will issue electronically. The electronically issued patent is the official patent grant pursuant to 35 U.S.C. § 153. The patent may be accessed on or after the issue date through Patent Center at https://patentcenter.uspto.gov/. The patent will be available in both the public and the private sides of Patent Center. Further assistance in electronically accessing the patent, or about Patent Center, is available by calling the Patent Electronic Business Center at 1-888-217-9197.

The USPTO is implementing electronic patent issuance with a transition period, during which period the USPTO will mail a ceremonial paper copy of the electronic patent grant to the correspondence address of record. Additional copies of the patent (i.e., certified and presentation copies) may be ordered for a fee from the USPTO's Certified Copy Center at https://certifiedcopycenter.uspto.gov/index.html. The Certified Copy Center may be reached at (800)972-6382.

Determination of Patent Term Adjustment under 35 U.S.C. 154 (b)
(application filed on or after May 29, 2000)

The Patent Term Adjustment is 0 day(s). Any patent to issue from the above-identified application will include an indication of the adjustment on the front page.

If a Continued Prosecution Application (CPA) was filed in the above-identified application, the filing date that determines Patent Term Adjustment is the filing date of the most recent CPA.

Applicant will be able to obtain more detailed information by accessing the Patent Application Information Retrieval (PAIR) WEB site (http://pair.uspto.gov).

Any questions regarding the Patent Term Extension or Adjustment determination should be directed to the Office of Patent Legal Administration at (571)-272-7702. Questions relating to issue and publication fee payments should be directed to the Application Assistance Unit (AAU) of the Office of Patents Stakeholder Experience (OPSE), Stakeholder Support Division (SSD) at (571)-272-4200.

Microchip Ex. 1012, p. 227
Microchip v. Aptiv
IPR2024-00496

INVENTOR(s) (Please see PAIR WEB site http://pair.uspto.gov for additional inventors):

Robert M. Voto, Clarkston, MI;
Shyambabu Yeda, Rochester Hills, MI;
Craig Petku, Clarkston, MI;

APPLICANT(s) (Please see PAIR WEB site http://pair.uspto.gov for additional applicants):

Aptiv Technologies Limited, St. Michael, BARBADOS;

The United States represents the largest, most dynamic marketplace in the world and is an unparalleled location for business investment, innovation, and commercialization of new technologies. The USA offers tremendous resources and advantages for those who invest and manufacture goods here. Through SelectUSA, our nation works to encourage and facilitate business investment. To learn more about why the USA is the best country in the world to develop technology, manufacture products, and grow your business, visit SelectUSA.gov.

UNITED STATES PATENT AND TRADEMARK OFFICE

UNITED STATES DEPARTMENT OF COMMERCE
United States Patent and Trademark Office
Address : COMMISSIONER FOR PATENTS
P.O. Box 1450
Alexandria, VA 22313-1450
www.uspto.gov

APPLICATION NO.	ISSUE DATE	PATENT NO.
17/498,045	20-JUN-23	11681643

Billion & Armitage - Aptiv
7401 Metro Blvd. Suite 425
Minneapolis, MN 55439

EGRANT NOTIFICATION

Your electronic patent grant (eGrant) is now available, which can be accessed via Patent Center at https://patentcenter.uspto.gov

The electronic patent grant is the official patent grant under 35 U.S.C. 153. For more information, please visit https://www.uspto.gov/electronicgrants