IN THE UNITED STATES DISTRICT COURT
FOR THE DISTRICT OF DELAWARE

APTIV TECHNOLOGIES AG., Plaintiff and Counter Defendant, v. MICROCHIP TECHNOLOGY INC., Defendant and Counter Plaintiff.	Civil Action No. 1:23-cv-00307 (JDW) **JURY TRIAL DEMANDED**

PLAINTIFF AND COUNTER DEFENDANT APTIV TECHNOLOGIES AG'S OPENING CLAIM CONSTRUCTION BRIEF

TABLE OF CONTENTS

Page

I. INTRODUCTION 1

II. DISPUTED CLAIM TERMS 1

A. Term Nos. 1 and 2: "connecting the consumer device via the second USB port to the USB hub via the first USB port…" 1

B. Term Nos. 3 and 4: "a USB hub including a first USB port and a second USB port" / "wherein the USB hub includes a third USB port" 5

C. Term No. 5: "a USB Hub having a plurality of USB Ports…" / "providing a USB hub having a plurality of USB ports…" 7

D. Term No. 6: "providing efficient communications among USB components of a data communication system" 11

E. Term No. 7: "wherein the USB hub and USB bridge have different components and functionality" 13

F. Term No. 8: "signal detection circuit" 15

G. Term No. 9: "routing logic circuit" 17

H. Term No. 10: "some combination of embedded devices and consumer devices that are USB Devices along with at least one that is the second USB Host" 18

Microchip Ex. 1076, p. 2
Microchip v. Aptiv
IPR2024-00496

TABLE OF AUTHORITIES

Page(s)

Cases

Apex Inc. v. Raritan Comput., Inc.,
325 F.3d 1364 (Fed. Cir. 2003).....15, 17

Barrette Outdoor Living, Inc. v. Fortress Iron, LP,
Case No. 3:21-CV-2008-E, 2023 WL 5503030 (N.D. Tex. Aug. 25, 2023).....19

BASF Corp. v. Johnson Matthey Inc.,
875 F.3d 1360 (Fed. Cir. 2017).....18

In re Copaxone Consol. Cases,
906 F.3d 1013 (Fed. Cir. 2018).....12

H-W Tech., L.C. v. Overstock.com, Inc.,
758 F.3d 1329 (Fed. Cir. 2014).....2

Hoffer v. Microsoft Corp.,
405 F.3d 1326 (Fed. Cir. 2005).....5

Microchip Tech. Inc. v. Aptiv Servs. US, LLC,
No. 17-1194-LPS-CJB, 2019 WL 2502417 (D. Del. Jun. 17, 2019).....4, 5

Microsoft Corp. v. I4I Ltd. P'ship,
564 U.S. 91 (2011).....8

Minton v. NASD, Inc.,
336 F.3d 1373 (Fed. Cir. 2003).....12

Nature Simulation Sys. v. Autodesk, Inc.,
23 F.4th 1334 (Fed. Cir. 2022).....13

Nautilus, Inc. v. Biosig Instruments, Inc.,
572 U.S. 898 (2014).....8

Novo Indus. L.P. v. Micro Molds Corp.,
350 F.3d 1348 (Fed. Cir. 2003).....2

Skky, Inc. v. MindGeek, s.a.r.l.,
859 F.3d 1014 (Fed. Cir. 2017).....15

Sorensen v. Int'l Trade Comm'n,
427 F.3d 1375 (Fed. Cir. 2005).....13

Microchip Ex. 1076, p. 3
Microchip v. Aptiv
IPR2024-00496

Ultimax Cement Mfg. Corp. v. CTS Cement Mfg. Corp.,
587 F.3d 1339 (Fed. Cir. 2009).....2

Williamson v. Citrix Online, LLC,
792 F.3d 1339 (Fed. Cir. 2015) (en banc).....15

Statutes

35 U.S.C. § 112(f).....15, 17

Other Authorities

Different, Merriam-Webster Online Dictionary (Jan. 8, 2024),
https://www.merriam-webster.com/dictionary/different).....13

Microchip Ex. 1076, p. 4
Microchip v. Aptiv
IPR2024-00496

I. INTRODUCTION

The parties' claim construction disputes fall into two categories: judicial correction and indefiniteness. Aptiv seeks correction of two sets of errors. Each error would have been obvious to a person of ordinary skill in the art ("POSITA") and thus should be judicially corrected. The remaining six terms are various phrases that Microchip argues are indefinite and for which Microchip bears the burden of proof by clear and convincing evidence. Microchip cannot meet that burden: a POSITA would have had no trouble understanding the phrases Microchip identifies and certainly would have understood them well enough to reasonably ascertain the scope of the claimed inventions. The Court should thus find those terms not indefinite.

II. DISPUTED CLAIM TERMS

A. Term Nos. 1 and 2: "connecting the consumer device via the second USB port to the USB hub via the first USB port…"

No.	Claim Term	Plaintiff's Proposed Construction	Defendant's Proposed Construction
1	"connecting the consumer device via the second USB port to the USB hub via the first USB port through the USB routing switch and the USB bridge" '420 patent, claim 13	"connecting the consumer device via the second USB port to the USB host via the first USB port through the USB routing switch and the USB bridge"	Plain and ordinary meaning
2	"connecting the consumer device via the second USB port to the USB hub via the first USB port through the USB routing switch and the USB hub" '420 patent, claim 13	"connecting the consumer device via the second USB port to the USB host via the first USB port through the USB routing switch and the USB hub"	Plain and ordinary meaning

The Court should correct the obvious errors in claim 13 of the '420 patent: in two instances, the claim recites connecting the consumer device "to the USB ***hub*** via the first USB

Microchip Ex. 1076, p. 5
Microchip v. Aptiv
IPR2024-00496

port" but should instead recite connecting the consumer device "to the USB ***host*** via the first USB port."

An obvious error, warranting correction, is one that is evident from the face of the patent. *See H-W Tech., L.C. v. Overstock.com, Inc.*, 758 F.3d 1329, 1333 (Fed. Cir. 2014). Such "obvious" errors should be corrected by district courts at claim construction when: "(1) the correction is not subject to reasonable debate based on consideration of the claim language and the specification"—from the perspective of one of ordinary skill in the art—and "(2) the prosecution history does not suggest a different interpretation of the claims." *Novo Indus. L.P. v. Micro Molds Corp.*, 350 F.3d 1348, 1354 (Fed. Cir. 2003); *Ultimax Cement Mfg. Corp. v. CTS Cement Mfg. Corp.*, 587 F.3d 1339, 1353 (Fed. Cir. 2009).

The errors in claim 13 would have been obvious to a POSITA based on the surrounding claim language. (Andrews Decl. ¶¶ 21-25.) Claim 13 recites a method of operating a USB hub module and establishes that the hub module comprises "***a USB hub*** configured to be ***interconnected to a first USB port*** connected to a USB host ***and a second USB port*** connected to a consumer device." The disputed limitations, however, recite "connecting the consumer device via the ***second USB port to the USB hub via the first USB port***"—*i.e.*, connecting the second USB port to the USB hub "via the first USB port." This does not make sense because, as stated in the preamble, the "second USB port" is already connected to the USB hub, and thus would not also connect to the hub "via the first USB port."

Claim 13 also makes clear that the disputed limitations should recite connections to the "USB ***host***," rather than the "USB ***hub***." (Andrews Decl. ¶¶ 24-26.) Both disputed limitations describe connections that facilitate communications with the "USB host": the first limitation provides "bidirectional initiation of communication ***between the USB host and the consumer***

device when the consumer device is determined to be in the USB host mode," and the second limitation causes the consumer device to "only respond to ***communications initiated by the USB host*** when the consumer device is determined to be in USB device mode." But the disputed limitations only recite connecting the consumer device to the USB ***hub***; it is thus obvious that they should instead recite connecting the consumer device to the USB ***host***. This correction also aligns with the preamble because, as corrected, the disputed limitations would recite connecting the consumer device and host via their respective ports: "connecting the consumer device via the second USB port to the USB ***host*** via the first USB port."

The correction from "USB hub" to "USB host" is also consistent with the remaining claims in the '420 patent, the specification, and the prosecution history and thus is not subject to reasonable debate. (Andrews Decl. ¶¶ 26-29.)

First, claim 13 is the only claim of the '420 patent that describes facilitating communication between the host and consumer device by connecting the consumer device to the USB ***hub*** (versus the USB ***host***). All the other claims provide for such communication by connecting the "first USB port," connected to the USB ***host***, to the "second USB port," connected to the consumer device—confirming that claim 13 is erroneous. (Andrews Decl. ¶ 26.)

Second, the specification explains that "where the consumer device is acting as a USB Device, signals are routed normally through a USB Hub ***to the Head Unit [a vehicle's embedded USB Host]***," and "where the consumer device is acting as a USB Host, signals between the consumer device and the vehicle's embedded USB Host are routed and processed through a USB Host to Host Bridge which is connected to the USB Hub, ***thereby rendering the consumer***

device compatible with the vehicle's embedded USB Host." ('037 Patent at 4:22-30, 4:36-37.)[1] Consistent with the express requirements of claim 13, the specification explains that a purpose of the claimed invention is to facilitate connections between the consumer device and the USB ***host***, wherein the signals are routed differently depending on whether the consumer device is in host or device mode. It is thus clear that claim 13—which only recites connections between the consumer device and the USB ***hub***—is wrong and must be corrected to recite connections between the consumer device and the USB ***host***. (Andrews Decl. ¶¶ 27-29.)

Indeed, Microchip sought and obtained an analogous correction in the parties' prior litigation: the Court corrected "USB device" to "USB hub," because the patentee clearly meant to claim that the "second host device is … connected to the USB ***hub***," rather than the USB device. *See Microchip Tech. Inc. v. Aptiv Servs. US, LLC*, No. 17-1194-LPS-CJB, 2019 WL 2502417, at *4-5 (D. Del. Jun. 17, 2019). The correction was not subject to reasonable debate because the specification established an "association between 'USB device' and 'USB hub.'" *Id.* The same logic applies here, warranting correction of "USB hub" to "USB host."

Third, during prosecution, the examiner stated that the primary reason for allowance was "that [the] prior arts don't teach a peripheral device to communicate with a USB hub bi-directionally in a first mode and to communicate with the hub only uni-directionally in a second mode wherein the device is only able to respond, and ***wherein a respective path between the device and <u>host</u> is taken for each mode***." (D.I. 116-1, Ex. 7 at APTIV_10000843-844 (emphasis added).) In other words, the examiner recognized that, in the claimed invention, the consumer device must connect to the USB ***host***, not just the USB hub.

---

[1] The specifications for the '037, '420, '072, and '643 patents are materially the same in relevant respects, so Aptiv cites to the '037 patent specification throughout for convenience.

B. Term Nos. 3 and 4: "a USB hub including a first USB port and a second USB port" / "wherein the USB hub includes a third USB port"

No.	Claim Term	Plaintiff's Proposed Construction	Defendant's Proposed Construction
3	"a USB hub including a first USB port and a second USB port" '420 patent, claim 18.	"a USB hub interconnected to a first USB port and a second USB port"	Plain and ordinary meaning
4	"wherein the USB hub includes a third USB port" '420 patent, claim 19.	"wherein the USB hub is interconnected to a third USB port"	Plain and ordinary meaning

The Court should correct the term "a USB hub ***including*** a first USB port and a second USB port" in claim 18 of the '420 patent to "a USB hub ***interconnected to*** a first USB port and a second USB port." This error is evident from the face of the patent and is not subject to reasonable debate. *See Hoffer v. Microsoft Corp.*, 405 F.3d 1326, 1331 (Fed. Cir. 2005); (Andrews Decl. ¶¶ 30-35.) For the same reasons, the Court should also correct the analogous error in claim 19, which depends from claim 18 and describes the relationship between the USB hub of claim 18 and one additional port ("a third USB port").

Claim 18 is one of five independent claims in the '420 patent. All other claims that refer to a "USB hub" recite similar structures, requiring a "first USB port" connected to a USB host,[2] a "second USB port" connected to a consumer device, a "USB hub," a "bridge," and a "routing switch" that provides two alternate connection paths—through the bridge and bypassing the bridge—depending on whether the consumer device is a "host mode" or device mode." ('420 Patent, claims 1, 7, 13, 18; Andrews Decl. ¶¶ 30-31.) Claims 1, 7, and 13 all state that the "USB

[2] Although claim 18 does not use the words "USB host" and instead refers to a "central vehicle microcontroller," the specification makes clear that a "central vehicle microcontroller" is also known as a "head unit" ('037 Patent at 2:18-20), and the head unit contains a USB host (*id.* at 4:35-37). (Andrews Decl. ¶ 31 n.1.)

Microchip Ex. 1076, p. 9
Microchip v. Aptiv
IPR2024-00496

hub" is "interconnected to" the first and second USB port whereas claim 18 recites "a USB hub including" the first and second USB ports; it thus would have been obvious to a POSITA that the use of "including" in term 18 was an error and should have instead stated "interconnected to" like the other analogous claims. (Andrews Decl. ¶¶ 31-35.)

The prosecution history does not suggest otherwise. The error was introduced at the start of prosecution, (D.I. 116-1, Ex. 8 at APTIV_10000658 (then claim 28)), and the claim issued without facing any rejections and with minor examiner's amendments, (*id.*, Ex. 7 at APTIV_10000842-843). The examiner's amendments and reasons for allowance had nothing to do with the relationship between the USB hub and the first and second USB ports, and was the same for all the claims: "The primary reason for allowance of claims 1, 7, 13, 25, and 28 [which issued as claims 1, 7, 13, 15, and 18] in the instant application is that the prior arts don't teach a peripheral device to communicate with a USB hub bi-directionally in a first mode and to communicate with the hub only uni-directionally in a second mode wherein the device is only able to respond, and wherein a respective path between the device and host is taken for each mode." (*Id.* at APTIV_10000843-844.) The examiner never addressed the fact that, of the claims that refer to a "USB hub," all except claim 18 (and its dependents) state that the USB hub is "interconnected to" the first and second USB ports. (*See id.* at APTIV_1000836-837 (claim 1), -838 (claim 7), -840 (claim 13).) That suggests that the examiner, like the applicant, simply did not notice the use of "including" in claim 18 rather than "interconnected to" and, had he noticed, would have known that claim 18 was erroneous and should match the language of the other claims.

C. Term No. 5: "a USB Hub having a plurality of USB Ports…" / "providing a USB hub having a plurality of USB ports…"

No.	Claim Term	Plaintiff's Proposed Construction	Defendant's Proposed Construction
5	"a USB Hub having a plurality of USB Ports and interconnected to the embedded USB Host system . . . a USB routing switch interconnected to the USB Bridge, the USB Hub, and the plurality of USB Ports, wherein the USB routing switch is configured to connect a first USB Port of the plurality of USB Ports to the USB Hub through the USB Bridge . . . , and wherein the USB routing switch is configured to connect the first USB Port directly to the USB Hub . . . " '037 patent, claim 1. "providing a USB hub having a plurality of USB ports interconnected to the USB host . . . automatically configuring the USB routing switch to connect a first USB Port of the plurality of USB ports to the USB hub through the USB bridge . . . ; and automatically configuring the USB routing switch to initiate bidirectional communication with the USB host, wherein the USB routing switch is configured to connect the first USB port directly to the USB hub . . . " '899 patent, claim 1.	Not indefinite	Indefinite

Microchip asserts that the lengthy phrases above are indefinite. Based on the parties' discussions, Microchip argues that a POSITA would not know what it means for a USB hub to "have" a plurality of USB ports and thus would not understand the scope of these claim terms.

"[A] patent is invalid for indefiniteness if its claims, read in light of the specification delineating the patent, and the prosecution history, fail to inform, with reasonable certainty, those skilled in the art about the scope of the invention." *Nautilus, Inc. v. Biosig Instruments, Inc.*, 572 U.S. 898, 901 (2014). Microchip bears the burden of proving indefiniteness by clear and convincing evidence. *Microsoft Corp. v. I4I Ltd. P'ship*, 564 U.S. 91, 95 (2011). Microchip cannot do so.

There is nothing ambiguous about the phrase "a USB hub having a plurality of USB ports." "Having," which is the present participle of "have," is a common word with a well understood meaning. As relevant here, "having" means possessing. (*See* Andrews Decl. ¶ 36, Ex. C (definition 1a).)

That makes perfect sense given the relationship between a USB hub and USB ports. As explained in the '037 patent specification, "USB Hubs allow a single USB Host to connect to multiple USB Devices over a single cable between the USB Host and the USB Hub." ('037 patent at 1:66-2:1.) This is illustrated in Figure 1, which shows a "USB Hub having a plurality of USB ports connect[ed] to a plurality of USB Devices (via a plurality of consumer-facing USB ports)":

Figure 1

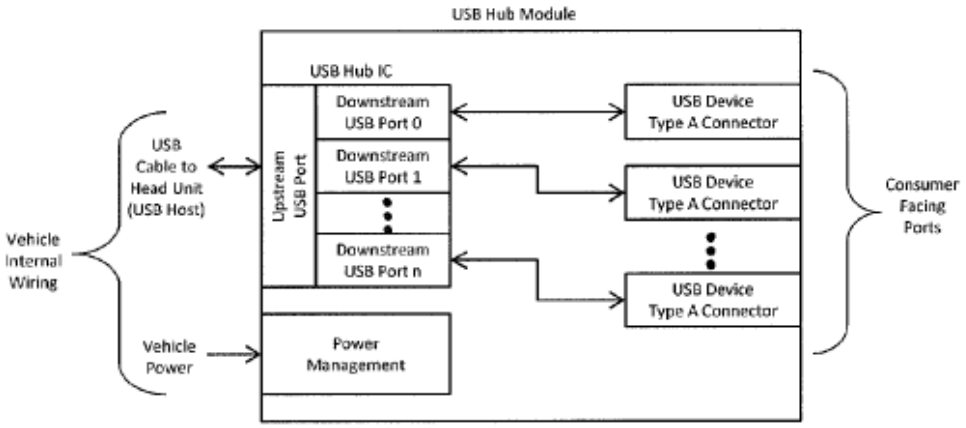

The USB hub "has" (*i.e.*, possesses) the ports labeled "Downstream USB Port 0" through "Port n," as well as the consumer facing ports that are further downstream, because the hub connects each of those ports to the bus: the hub allows the USB host to connect to the USB devices through each downstream port, regardless of whether the port is part of the hub or further downstream. (Andrews Decl. ¶¶ 46-47.)

That is also consistent with the USB Specification Revision 2.0 (the "USB Specification"), which sets forth the requirements of a USB 2.0 system. (Andrews Decl. ¶¶ 15-16, Ex. B.) The USB Specification defines a hub as "[a] USB device that provides additional connections to the USB [Universal Serial Bus]." (Andrews Decl., Ex. B at 6.) More specifically, it explains:

> Hubs are wiring concentrators and enable the multiple attachment characteristics of the USB. Attachment points are referred to as ports. Each hub converts a single attachment point into multiple attachment points….***Each of the downstream ports <u>of a hub</u> allows connection to another hub or function. Hubs can detect attach and detach at each downstream port and enable the distribution of power to downstream devices.***

(*Id.*, Ex. B at 22 (emphasis added).) In other words, the "downstream ports" that the hub connects to the bus (which in turn connect to additional devices), are ports "***of*** a hub"—*i.e.*, they are ports possessed by the hub. (Andrews Decl. ¶¶ 37-40.)

This is further illustrated by the USB Specification's example of hubs operating in a typical desktop computer environment:

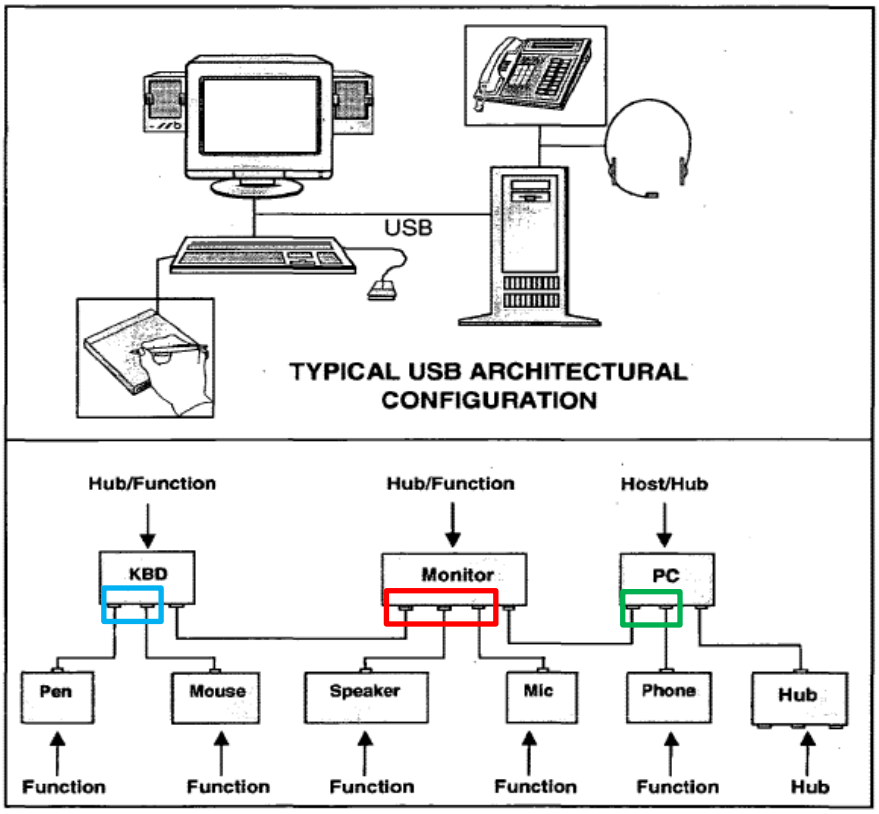

Figure 4-4. Hubs in a Desktop Computer Environment

(Andrews Decl., Ex. B at 23 (annotated).)

The PC contains both the USB host and a hub, which is further connected to additional downstream hubs in the monitor and keyboard. The PC hub, monitor hub, and keyboard hub each comprise downstream attachment points (in the green, red, and blue boxes, respectively). Per the excerpt above, those attachment points are downstream ports that allow connection to another USB device. (*Id.* at 22.) Each hub connects all of the devices downstream of that hub to the PC host: the keyboard hub connects the pen and mouse; the monitor hub connects the speaker and mic, as well as the keyboard, pen, and mouse; and the PC hub connects the phone, monitor, speaker, mic, keyboard, pen, and mouse. The downstream ports that allow for the connections provided by each hub are all ports "of" the hub (*i.e.*, ports the hub "has"), whether those ports are part of the hub or not: the keyboard hub has the ports in the blue box; the monitor

hub has the ports in the red and blue boxes; and the PC hub has the ports in the red, blue, and green boxes. (Andrews Decl. ¶¶ 41-45.)

D. Term No. 6: "providing efficient communications among USB components of a data communication system"

No.	Claim Term	Plaintiff's Proposed Construction	Defendant's Proposed Construction
6	"providing efficient communications among USB components of a data communication system" '072 patent, claim 1.	Not definite	Indefinite

Microchip suggests that the term "providing efficient communications among USB components of a data communication system" is indefinite because a POSITA would have no way of determining whether the communications in a given system are efficient. Microchip's argument presumes that the phrase requires a threshold degree of efficiency. It does not. Rather, the phrase "providing efficient communications" simply describes the intended result, *i.e.*, "efficient communications" are provided by performing the claimed "receiving" and "routing" limitations (*i.e.* the communication steps). The intrinsic and extrinsic evidence both support that conclusion.

Claim 1 is a method claim that requires performing four "receiving" and "routing" steps on a recited data communication system. It comprises five limitations: the four communications steps (*i.e.* "receiving a first USB signal…," "routing the first USB signal…," "receiving a first USB signal…," and "routing the second USB signals…"), and a limitation (containing the term at issue) requiring those steps be performed on a recited data communication system. A POSITA would understand the disputed claim language to be describing the effect of performing claim limitations, and not an additional limitation that the communications meet some threshold level of efficiency. (Andrews Decl. ¶¶ 51-52.) As the Federal Circuit has held, laudatory adjectives,

such as "efficient," describing the intended benefits of using the claimed invention, are not limiting. For example, in *Minton v. NASD, Inc.*, 336 F.3d 1373, 1381 (Fed. Cir. 2003), the court found the term "efficiently" to be non-limiting because it is a "laudatory" term "characterizing the result of the executing step." *See also In re Copaxone Consol. Cases*, 906 F.3d 1013, 1023 (Fed. Cir. 2018) (in claim requiring a "therapeutically effective regimen," "therapeutically effective" was non-limiting laudatory language where claim otherwise specified steps of claimed regimen).

The intrinsic evidence confirms that a POSITA would understand the phrase "efficient communications" to refer to the communication steps described in the receiving/routing limitations in Claim 1. ***First***, the structure of the claim makes clear that the first limitation (containing the language at issue) specifies the components of the system on which the process steps are performed, including components not recited by the proceeding process steps (for example the first and second input ports), confirming it further limits the claim. ***Second***, the specification clarifies that the recited process step limitations result in efficiencies by avoiding "the need to provide additional cabling in the vehicle." ('072 Patent at 4:7-14; *see also id.* at 1:21-28 (the claimed invention relates allowing dual role USB devices to connect to a "vehicle's embedded USB host that does not have On the Go").)

Extrinsic evidence confirms this conclusion. ***First***, there is no common metric for efficiency in the context of USB networks, so a POSITA would understand "efficient" to be a qualitative description of the communications. (Andrews Decl. ¶ 48.) ***Second***, a POSITA would understand that one of the purposes of the disclosed invention was to provide an efficient solution to enabling a car's infotainment system to communicate with a phone in host mode, without the need for a second cable to the head unit or a special on-the-go "OTG" port on each

downstream USB port, and would understand the disclosed method achieves that efficiency. (Andrews Decl. ¶¶ 49-52.)

E. Term No. 7: "wherein the USB hub and USB bridge have different components and functionality"

No.	Claim Term	Plaintiff's Proposed Construction	Defendant's Proposed Construction
7	"wherein the USB hub and USB bridge have different components and functionality" '643 patent, claims 1, 5, and 10.	Not definite	Indefinite

Microchip claims this straightforward language is indefinite. Not so. This claim limitation requires what it says: the claimed USB bridge and the claimed USB hub must have different components and different functionality from each other. Merriam Webster's definition of "different" confirms the common meaning of that word: "partly or totally unlike in nature form or quality" or "not the same." (Ex. 41 (*Different*, Merriam-Webster Online Dictionary (Jan. 8, 2024), https://www.merriam-webster.com/dictionary/different).) Therefore, as long as the claimed USB bridge and the USB hub do not have the exact same components and do not have the exact same functionality, they meet this limitation. This is consistent with how the Federal Circuit has construed the term "different." *See, e.g.*, *Sorensen v. Int'l Trade Comm'n*, 427 F.3d 1375, 1379 (Fed. Cir. 2005) (construing "different characteristics" to mean "any difference in characteristics").

Notably, this language was added by the examiner to place the at-issue claims in position for allowance. (D.I. 116-1, Ex. 35 at APTIV_10004384-86 (examiner adding "have different components and functionality" to claims 1, 5 and 10).) The added language is therefore presumed definite. *See Nature Simulation Sys. v. Autodesk, Inc.*, 23 F.4th 1334, 1343 (Fed. Cir.

2022) ("We presume that an examiner would not introduce an indefinite term into a claim when he/she chooses to amend the claim for the very purpose of putting the application in a condition for allowance.") (quoting *Tinnus Ents., LLC v. Telebrands Corp.*, 733 F. App'x 1101, 1020 (Fed. Cir. 2018).

A POSITA would see no ambiguity in the requirement that the bridge and hub have "different components and functionality" in light of the specification, understanding that the claimed USB bridge would need to provide some functionality that the claimed USB hub does not. (Andrews Decl. ¶¶ 56-57.) The specification describes this functionality at length. (*See, e.g.*, '037 Patent at Fig. 6, Fig. 7, 4:41-50, 5:67-6:2, 6:10-13, 6:40-55, 7:26-8:38.)

A POSITA would also readily understand the requirement that the bridge and the hub have "different components." In the context of a multiple-chip embodiment of the invention, this requirement could be met by the bridge and the hub having separate integrated circuits. (Andrews Decl. ¶ 58.) In embodiments where the hub and the bridge are on the same integrated circuit, as illustrated in Figures 5 and 6, a POSITA would understand this limitation to require that the specific components of the integrated circuits performing the hub- and bridge-related functions not be coextensive, such that there is at least one physical component that is part of the bridge or hub that is not a component of the other. (Andrews Decl. ¶ 59-62.)

Microchip Ex. 1076, p. 18
Microchip v. Aptiv
IPR2024-00496

F. Term No. 8: "signal detection circuit"

No.	Claim Term	Plaintiff's Proposed Construction	Defendant's Proposed Construction
8	"signal detection circuit" '643 patent, claims 1 and 5.	35 U.S.C. § 112(f) does not apply; not indefinite	Indefinite means-plus-function term. Function: determining whether a connected device is operating in host mode. Corresponding structure: none.

The core of the parties' dispute regarding "signal detection circuit" is whether the rules of "means-plus-function" claiming under 35 U.S.C. § 112(f) apply to limit the scope of this term. Because the claim language does not include the word "means," § 112(f) is presumed not to apply. *Williamson v. Citrix Online, LLC*, 792 F.3d 1339, 1348 (Fed. Cir. 2015) (en banc). It is thus Microchip's burden to demonstrate that the limitation, as understood by a POSITA, "fails to recite sufficiently definite structure or else recites a function without reciting sufficient structure for performing that function." *Apex Inc. v. Raritan Comput., Inc.*, 325 F.3d 1364, 1373 (Fed. Cir. 2003). "To determine whether a claim recites sufficient structure, it is sufficient if the claim term is used in common parlance or by persons of skill in the pertinent art to designate structure, ***even if the term covers a broad class of structures and even if the term identifies the structures by their function***." *Skky, Inc. v. MindGeek, s.a.r.l.*, 859 F.3d 1014, 1019 (Fed. Cir. 2017) (cleaned up and emphasis added).

Beginning with the plain language of the claim, "circuit" itself connotes structure to a POSITA, and the adjectival qualification that the circuit is for "signal detection" provides a further identification of "sufficient structure to perform the claimed functions to one of ordinary skill in the art." *Apex*, 325 F.3d at 1374; (*see* Andrews Decl. ¶¶ 65-66). A POSITA would

understand that "signal detection circuit" connotes a class of circuits that perform signal reception and identification functions. (Andrews Decl. ¶¶ 67, 71.) Indeed, the term "signal detection circuit" was used by POSITAs in the pertinent field of serial signaling to describe a class of circuits used for signal detection as part of the USB signaling process. (*See* Ex. 42 ['965 Patent].) US Patent No. 7,282,965, entitled "Signal detection circuit capable of automatically adjusting threshold value," is a patent issued in 2007 that makes exemplary use of the disputed term, disclosing that "[i]n serial communications, a signal detection circuit for detecting whether or not a prescribed signal is being input is often used." (Ex. 42 at 1:10-12.) The '965 patent provides an example of the use of the class of structures named by the claim term in the specific context of USB: "In Universal Serial Bus (USB) and Serial AT Attachment (serial ATA), the signal detection circuit is used for a return sequence from an initialize sequence and a power management state," (*id.* at 1:10-12, 1:16-19), and further explains the benefits of a particular prior art "signal detection circuit that outputs a squelch signal required in USB 2.0 Standard" (*Id.* at 1:41-42; *see* Andrews Decl. ¶ 69 (citing USB 2.0 at Figure 7-1).)

The claims of the '643 patent consistently use the term "signal detection circuit" to connote structure that performs the functions of signal detection circuits that were known in the art: receiving a signal and detecting what type of signal is being received. Devices operating in host mode and devices operating in device mode can generate different signals under the USB specification. (Andrews Decl. ¶ 71.) And during the process of enumeration, in which devices are assigned addresses and the type of device is determined, the mode in which the device is operating can be detected based on signals received by a hub from a connected device. (Andrews Decl. ¶¶ 69-71.) In claim 1, the "signal detection circuit" (1) "receiv[es] USB signals from the consumer USB device via the second USB port" and (2) determines whether the signal

is from a consumer device "operating in a USB host mode" or "operating in a USB device mode." Because a POSITA would recognize that the claim term "signal detection circuit" is a name for a class of structure that performs the functions set forth in the claim, Microchip cannot carry its burden to overcome the presumption that § 112(f) does not apply to limit the scope of the claim term. *See Apex*, 325 F.3d at 1373.

G. Term No. 9: "routing logic circuit"

No.	Claim Term	Plaintiff's Proposed Construction	Defendant's Proposed Construction
9	"routing logic circuit" '643 patent, claims 1, 5, and 10.	Not indefinite	Indefinite

In contrast with Microchip's argument regarding "signal detection circuit," Microchip concedes that "routing logic circuit" would be understood by a POSITA to refer to sufficiently definite structure such that 35 U.S.C. § 112(f) does not apply. A POSITA would understand from the plain language of the claim term that "routing logic circuit" connotes a class of structures that directs signals from one input/output interface to another. (Andrews Decl. ¶ 73.) And the claims set forth the functions performed by the "routing logic circuit." In claim 1, which is representative, the function is that of "routing the USB signals emanating from the consumer USB device" in a manner consistent with whether the consumer USB device is operating in host or device mode:

- if in host mode, the "routing logic circuit" routes the signals to the first UBS port through both a "USB bridge and a USB hub connected to the USB bridge"; and
- if in device mode, the "routing logic" routes the signals to the first USB port through only the USB hub and "bypassing the USB bridge."

('643 Patent at claim 1; *see also id.* at claims 5, 10 (requiring routing signals depending on

whether such signals emanate from a USB host).)

Consistent with the use of "routing logic circuit" in the claims, the specification discloses multiple configurations in which routing logic circuitry may be present. Circuits inside a USB multiplexing switch are examples of such circuitry. (Andrews Decl. ¶ 73.) Another example, in Figure 5 and its related description, is that "USB Routing Logic" circuits may be included as part of an integrated circuit "Combo USB Hub/Bridge." ('037 Patent at Fig. 5, 5:25-29 (explaining that in one embodiment, the "USB routing/switching logic and a USB Bridge are integrated with a USB Hub in a combination USB Hub/USB Bridge Integrated Circuit (IC)"); Andrews Decl. ¶ 74.) Microchip apparently contends that "routing logic circuit" is indefinite because the term encompasses a broad class of possible structures, but breadth of claim scope does not imply indefiniteness as a matter of law. *BASF Corp. v. Johnson Matthey Inc.*, 875 F.3d 1360, 1367 (Fed. Cir. 2017) ("But the inference of indefiniteness simply from the scope finding is legally incorrect: 'breadth is not indefiniteness.'").

H. Term No. 10: "some combination of embedded devices and consumer devices that are USB Devices along with at least one that is the second USB Host"

No.	Claim Term	Plaintiff's Proposed Construction	Defendant's Proposed Construction
10	"some combination of embedded devices and consumer devices that are USB Devices along with at least one that is the second USB Host" '037 patent, claim 16.	Not indefinite	Indefinite

Microchip claims this term is indefinite because it does not specify what combination of consumer and embedded devices would suffice to satisfy the limitation. The answer lies in the claim term: as long as the system is configured to support simultaneous active (*i.e.* "persistent") USB data connections between the infotainment system (i.e. the head unit) on the one hand, and

a combination of embedded[3] and consumer devices (one of which is in host mode) on the other, it meets this limitation; no specific combination is required. *See Barrette Outdoor Living, Inc. v. Fortress Iron, LP*, Case No. 3:21-CV-2008-E, 2023 WL 5503030, at *27 (N.D. Tex. Aug. 25, 2023) (claim term reciting a "combination pivoting and sliding motion" not indefinite and not requiring a specific ratio of pivoting and sliding).

The disputed claim language relates to a benefit of the patented invention: the ability to maintain persistent USB data connections between a vehicle's embedded USB host (head unit) and downstream USB devices when a consumer device is connected to the system and is in host mode. Under the prior art, using role reversal and OTG ports, the USB network could be reversed, with the consumer device becoming the host, and the head unit becoming a device. (Andrews Decl. ¶¶ 78-79.) However, a downside of this approach was that the USB data connection between the head unit and the other downstream devices on the network would no longer work. (*Id.*; '037 Patent at 3:56-64.) The invention, however, enabled the embedded USB host to maintain active data connections between it and the other downstream devices on the network. ('037 Patent at 8:59-63 (configuration "allowing concurrent operation of consumer devices operating in USB Device mode with consumer devices operating in USB Host mode."); Andrews Decl. ¶¶ 79-80.) Downstream devices "operating in USB Device mode" could be USB devices embedded in the vehicle or consumer USB devices plugged in through consumer-facing ports. (*Id.*)

A POSITA would understand the "some combination of embedded devices and consumer devices" language to require the functionality that was not available under the prior art solutions:

---

[3] Consistent with the parties' agreed upon construction of "embedded USB host," these devices are embedded within the vehicle. (Dkt. 115 at 2.)

Microchip Ex. 1076, p. 23
Microchip v. Aptiv
IPR2024-00496

permitting host-to-host communication between the head unit and the consumer device in host mode while simultaneously preserving active USB data connections between the head unit and the other USB devices in the system. (Andrews Decl. ¶ 80.) What specific combinations of those devices the system must accommodate is immaterial; what matters is that the system is configured to support that simultaneous active USB data for ***some*** combination of such devices. (*Id.*)

POTTER ANDERSON & CORROON LLP

By: */s/ Philip A. Rovner*

Philip A. Rovner (#3215)
POTTER ANDERSON & CORROON LLP
Hercules Plaza
P.O. Box 951
Wilmington, DE 19899
(302) 984-6000
provner@potteranderson.com
jchoa@potteranderson.com

Attorneys for Plaintiff
Aptiv Technologies AG

OF COUNSEL:

Daralyn J. Durie
Timothy Saulsbury
Eric C. Wiener
Andrew L. Perito
Joyce C. Li
Tannyr Pasvantis
MORRISON & FOERSTER LLP
425 Market Street
San Francisco, CA 94105
(415) 268-7000

Andrew T. Jones
MORRISON & FOERSTER LLP
2100 L St., NW
Suite 900
Washington, D.C., 20037
(202) 887-1500

W. Henry Huttinger
MORRISON & FOERSTER LLP
707 Wilshire Blvd.
Los Angeles, CA 90017
(213) 892-5200

Dated: January 17, 2024

Microchip Ex. 1076, p. 24
Microchip v. Aptiv
IPR2024-00496

CERTIFICATE OF SERVICE

I hereby certify that on January 17, 2024, I certify that I caused copies of the foregoing document to be served on January 17, 2024, upon the following in the manner indicated:

Jack B. Blumenfeld *VIA ELECTRONIC MAIL*
Brian P. Egan
Travis J. Murray
MORRIS, NICHOLS, ARSHT &
TUNNELL LLP
1201 North Market Street
P.O. Box 1347
Wilmington, DE 19899-1347
jblumenfeld@morrisnichols.com
began@morrisnichols.com
tmurray@morrisnichols.com

John M. Neukom *VIA ELECTRONIC MAIL*
Barbara N. Barath
Yuqing Cui
Alexander H. Lee
DEBEVOISE & PLIMPTON LLP
650 California Street
San Francisco, CA 94108
jneukom@debevoise.com
bnbarath@debevoise.com
ycui@debevoise.com
ahlee@debevoise.com

Andrew Gish *VIA ELECTRONIC MAIL*
Edward Tulin
Ryan K. Iwahashi
GISH PLLC
41 Madison Avenue, Floor 31
New York, NY 10010
andrew@gishpllc.com
edward@gishpllc.com
ryan@gishpllc.com

/s/ Janelle Cotton
Janelle Cotton

IN THE UNITED STATES DISTRICT COURT
FOR THE DISTRICT OF DELAWARE

APTIV TECHNOLOGIES AG, Plaintiff and Counter Defendant, v. MICROCHIP TECHNOLOGY INC., Defendant and Counter Plaintiff.	Civil Action No. 1:23-cv-00307 (JDW) **JURY TRIAL DEMANDED**

DECLARATION OF SCOTT ANDREWS IN SUPPORT OF PLAINTIFF AND COUNTER DEFENDANT'S OPENING CLAIM CONSTRUCTION BRIEF

I, Scott Andrews, declare as follows:

I. INTRODUCTION

1. This declaration sets forth my opinions relating to the construction of certain terms of the claims of U.S. Patent No. 9,619,420 (the "'420 Patent"), U.S. Patent No. 9,645,962 (the "'962 Patent"), U.S. Patent No. 9,460,037 (the "'037 Patent"), U.S. Patent No. 10,545,899 (the "'899 Patent"), U.S. Patent No. 11,176,072 (the "'072 Patent), and U.S. Patent No. 11,681,643 (the "'643 Patent") (collectively the "Aptiv Asserted Patents").

II. EDUCATIONAL AND PROFESSIONAL BACKGROUND

2. I have over 30 years of professional experience in the fields of mobile and automotive technologies and systems, including vehicle information systems, and navigation systems. I have authored numerous published technical papers and am a named inventor on 25 U.S. and foreign patents in the areas of automotive electronics and controls, automotive safety systems, mobile electronics, location-based systems, and cybersecurity.

3. I received a Bachelor of Science degree in Electrical Engineering from University of California, Irvine in 1977 and a Master of Science degree in Electronic Engineering from Stanford University in 1982.

4. From 1977 to 1979, I worked at Ford Aerospace where I designed, tested, and delivered microwave radar receiver systems.

5. From 1979 to 1983, I worked at Teledyne Microwave, where I developed high reliability microwave components and developed CAD tools.

6. From 1983 to 1996, I worked at TRW, Inc., having held various positions. From 1983 to 1985, I was a Member of the technical staff and a Department Manager in the Space Electronics sector. Between 1985 and 1990, I was a project manager working on various

communications systems projects including the United States Department of Defense Advanced Research Projects Administration ("ARPA") MIMIC Program. Between 1990 and 1993, I was the Manager of MMIC (Monolithic-Microwave-Integrated-Circuit) Products Organization. In this role, I developed business strategy and managed customer and R&D programs.

7. During this time, I also developed the first single chip 94 GHz Radar, used for automotive cruise control and anti-collision systems. In 1993, I transferred to the TRW Automotive Electronics Group, and managed about 30 engineers in the Systems Engineering and Advanced Product Development organization. In this role, I managed advanced development programs such as automotive radar, adaptive cruise control, occupant sensing, automatic crash notification systems, in-vehicle information systems, and other then-emerging transportation products.

8. From April 1996 to 2000, I was as a Project General Manager in the Electronics Division of Toyota Motor Corporation at Toyota headquarters in Japan. In this position, I was responsible for leading the development of vehicle telematics systems, infotainment systems, including on-board and off-board navigation systems, traffic information systems, vehicle communications systems, safety applications, and automated vehicle control systems.

9. In 1998, while employed by Toyota, I founded the Automotive Multimedia Interface Collaboration, a consortium of carmakers developing standards for in-vehicle computing, and interfaces between consumer multimedia systems and consumer electronics devices. This work resulted in a variety of standards for vehicle interfaces, user interfaces and vehicle software management that were eventually transferred to other standards organizations such as ISO and the OSGi Alliance. Some of the key elements of the AMI-C concept related to the creation of interfaces in the in-vehicle system to support the operation of applications running

Microchip Ex. 1076, p. 28
Microchip v. Aptiv
IPR2024-00496

on mobile devices such as phones, PDAs, and personal digital music players. One example of a consumer device facing interface that we adopted was the Universal Serial Bus ("USB"), including developing early concepts of how consumer devices would interface with vehicle infotainment systems using this type of network.

10. In the various positions mentioned above, I was responsible for research and development projects relating to numerous vehicle information systems, communications networks, user interface systems, sensory systems, control systems, and safety systems, and collaborated with numerous researchers and suppliers in the consumer electronics, computer, and automotive industry.

11. A more complete summary of my experience, expertise, and publications, as well as a summary of my expert testimony over the past 4 years is set forth in my curriculum vitae, attached hereto as **Exhibit A**.

III. PERSON OF ORDINARY SKILL IN THE ART

12. In my opinion, a person of ordinary skill in the art in the field of the Aptiv Asserted Patents, as of the date of invention (September 26, 2013) ("POSITA"), would have had a bachelor's degree in computer science, electrical engineering, or an equivalent, and two years of professional experience working with computer network protocols such as USB. Lack of work experience can be remedied by additional education, and vice versa.

13. My opinions regarding the level of ordinary skill in the art are based on, among other things, my industry experience hiring and managing technical personnel, and my understanding of the basic qualifications that would be relevant to an individual tasked with investigating methods and systems in the relevant area, and my familiarity with the backgrounds of colleagues, both past and present.

14. My education and my level of experience with automotive engineering exceeds that necessary for a person of ordinary skill in the art. My opinion as to the meaning of claim terms is provided from the perspective of a person of ordinary skill in the art.

IV. UNIVERSAL SERIAL BUS (USB)

15. USB is a data networking and computing device connectivity standard. The first USB specification (version 1.0) was released in January 1996. The USB 2.0 specification was released in April 2000, and the USB 3.0 specification was released in November 2008. The core principles of USB discussed here have remained consistent across specification versions. For ease of reference, I refer to the USB 2.0 Specification.

16. USB is a serial bus standard (hence the name, "Universal Serial Bus"). Serial buses use one or more wires to send and receive data between computing devices and peripheral devices. USB thus supports data exchange between a host computer and a wide range of simultaneously accessible USB devices (such as a mouse, keyboard, and computer monitor). (Ex. B (USB 2.0) at 15.)

17. As a result of this architectural assumption, the USB specification only allows for one host in any USB system. (*Id.* at 16.) The USB host controls all the devices connected to that host through the USB.

18. The direction of data flow in a USB network is described relative to the USB host. "Upstream" means the direction of data flow towards the host. (*Id.* at 10.) "Downstream" means the direction of data flow away from the host. (*Id.* at 5.)

19. The simplest USB network is composed of a USB host connected by a cable to a USB device. This could be, for example, a laptop computer connected to a mouse.

20. Multiple USB devices can be connected to the USB host using a device called a "USB hub", which is a specific type of USB device that allows the host to communicate with multiple devices through a single port on the host. To illustrate, the generic hub below connects the USB host (via the upstream port on the hub) to any device connected to one of the downstream ports #1-7, thereby providing six additional connections to the bus that would not have otherwise existed. This would, for example, allow a laptop host to connect to not just one device (*e.g.*, a mouse), but six additional devices (*e.g.*, a keyboard, web camera, microphone, two computer monitors, and an audio output device).

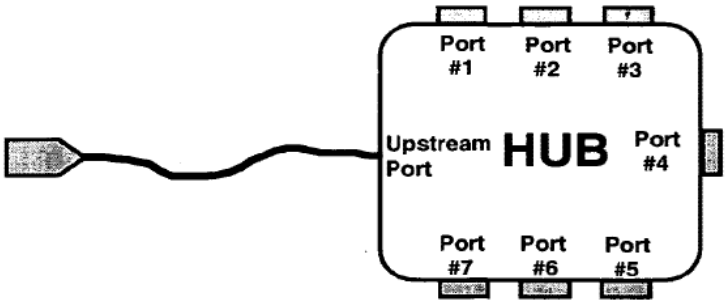

Figure 4-3. A Typical Hub

(Ex. B (USB 2.0) at 23.)

V. THE PARTIES' PROPOSED CONSTRUCTIONS

A. "connecting the consumer device via the second USB port to the USB hub via the first USB port through the USB routing switch and the USB bridge" / connecting the consumer device via the second USB port to the USB hub via the first USB port through the USB routing switch and the USB hub"

No.	Claim Term	Plaintiff's Proposed Construction	Defendant's Proposed Construction
1	"connecting the consumer device via the second USB port to the USB hub via the first USB port through the USB routing switch and the USB bridge" '420 patent, claim 13	"connecting the consumer device via the second USB port to the USB host via the first USB port through the USB	Plain and ordinary meaning

No.	Claim Term	Plaintiff's Proposed Construction	Defendant's Proposed Construction
		routing switch and the USB bridge"	
2	"connecting the consumer device via the second USB port to the USB hub via the first USB port through the USB routing switch and the USB hub" '420 patent, claim 13	"connecting the consumer device via the second USB port to the USB host via the first USB port through the USB routing switch and the USB hub"	Plain and ordinary meaning

21. I understand that the parties dispute whether Claim 13 of the '420 patent should be corrected such that the method recites connecting the consumer device "to the USB *host* via the first USB port" rather than "to the USB *hub* via the first USB port" in two instances. In my opinion, the recitation of "connecting the consumer device via the second USB port to the USB hub via the first USB port" is an obvious error and correcting this error to instead recite connecting to "the USB host" is clearly warranted and not subject to reasonable debate based on the claim language and specification of the '420 patent.

22. The preamble of Claim 13 of the '420 patent clearly recites that the first USB port connects the USB hub to the USB host and that the second USB port connects the USB hub to the consumer device. Specifically, Claim 13 of the '420 patent recites, in relevant part:

> A method of operating a USB hub module having a **USB hub** configured to be interconnected to **a first USB port connected to a USB host** and a **second USB port connected to a consumer device** …

('420 patent, Claim 13 (emphases added).)

23. The "connecting" steps of Claim 13 then recite "connecting the consumer device via the second USB port to the *USB hub* via the first USB port." However, per the preamble, the USB hub is already connected to the consumer device via the second USB port and thus would

not also connect to the consumer device via the first USB port. It thus would have been obvious to a POSITA that the "connecting" limitations contain an error.

24. It would have also been obvious from the surrounding claim language that the "connecting" limitations should recite connections to the "USB ***host***," rather than the "USB ***hub***." The first "connecting" limitation states: "connecting the consumer device via the second USB port to the USB hub via the first USB port through the USB routing switch and the USB bridge, ***thereby providing bidirectional initiation of communication between the USB host and the consumer device*** when the consumer device is determined to be in the USB host mode." The second connecting limitation states: "connecting the consumer device via the second USB port to the USB hub via the first USB port through the USB routing switch and the USB hub ***thereby*** bypassing the USB bridge ***to only respond to communication initiated by the USB host*** when the consumer device is determined to be in the USB device mode." These limitations thus make clear that the recited connections are between the consumer device and the USB ***host***. Because, as drafted, the "connecting" limitations only recite a connection between the consumer device and USB ***hub***, a POSITA would recognize that "USB ***hub***" in those limitations should instead state "USB ***host***."

25. This correction also aligns with the preamble of Claim 13 because, with the correction, the "connecting" limitations would recite connecting the consumer device and host via their respective ports: "connecting the consumer device via the second USB port to the USB ***host*** via the first USB port."

26. Claim 1 and Claim 7 both recite embodiments wherein the USB routing switch connects the second USB port (connected to a consumer device) to the first USB port (connected to a USB host). Claim 15 is similar in that it recites a USB routing switch configured to provide

a communication link between the first USB port and second USB port, as is Claim 18, which recites a USB routing switch providing a communication path between a second USB port and a first USB port. Accordingly, the other claims of the ’420 patent recite connecting the consumer device (via the second USB port) to the USB host (via the first USB port), and thus correcting “USB hub” to “USB host” in Claim 13 would also be consistent with the other claims of the ’420 patent.

27. The specification[1] explains that that the claimed invention facilitates connections between a consumer device and USB host wherein signals between the consumer device and USB host are routed differently depending on whether the consumer device is in host or device mode.

28. Specifically, the specification states:

> The present invention is capable of being implemented in several different embodiments. For example, an embodiment of the present invention comprises a USB Hub Module having a USB Hub, USB Bridge, and USB routing switches implemented as discrete devices. **The USB Hub upstream port is configured to be connected to a vehicle's embedded USB Host** (such as a USB Host in a Head Unit). The USB Hub Module also includes a switching device (such as USB analog multiplexing switches for example) that is configured to route each consumer port to either the Bridge or the Hub. The USB Bridge is configured to effectively control the switching device. The USB Bridge is configured, based on signals from the Head Unit, whether the consumer device which is connected to the USB port is acting as USB Host or USB Device. In the case where the consumer device is acting as USB Host, the USB Bridge controls the switching device to route the USB port to the Bridge. **The Bridge processes the signals from the consumer device and provides them to the USB Hub, thereby rendering the consumer device compatible with the vehicle's embedded USB Host. In the case where the consumer device is acting as USB Device, the USB Bridge controls the**

[1] The specifications for the ’037, ’420, ’072, and ’643 patents are materially the same in relevant respects. I cite to the ’037 patent specification for ease of reference.

> **switching device such that the switching device provides the signals to the USB Hub, effectively bypassing the Bridge.**

('037 patent, 4:31-54 (emphases added).)

> An embodiment of the present invention provides a system which can be employed between a vehicle's embedded USB Host and at least one, but preferably multiple, consumer facing USB ports provided in the vehicle for connection to consumer devices. The system is configured to recognize and control whether the consumer device is required to be connected to each USB port as a USB Host or as a USB Device. Further, the system is able to dynamically switch the device connection between USB Device mode and USB Host mode when desired. **In the case where the consumer device is acting as a USB Device, signals are routed normally through a USB Hub to the Head Unit. In the case where the consumer device is acting as a USB Host, signals between the consumer device and the vehicle's embedded USB Host are routed and processed through a USB Host to Host Bridge which is connected to the USB Hub, thereby rendering the consumer device compatible with the vehicle's embedded USB Host**.

(*Id.*, 4:12-30 (emphasis added).)

29. It is thus clear that the "connecting" limitations of Claim 13, which only recited connections between the consumer device and USB ***hub***, are wrong and should instead recite connections between the consumer device and USB ***host***.

B. "a USB hub including a first USB port and a second USB port" / "wherein the USB hub includes a third USB port"

No.	Claim Term	Plaintiff's Proposed Construction	Defendant's Proposed Construction
3	"a USB hub including a first USB port and a second USB port" '420 patent, claim 18	"a USB hub interconnected to a first USB port and a second USB port"	Plain and ordinary meaning
4	"wherein the USB hub includes a third USB port" '420 patent, claim 19	"wherein the USB hub is interconnected to a third USB port"	Plain and ordinary meaning

30. There are five independent claims of the ’420 patent. Four of the five (Claims 1, 7, 13, and 18) include the term “USB hub.” All of those claims describe similar structures.

31. Claims 1, 7, 13, and 18 all describe a structure having “a USB hub,” “a first USB port” connected to a USB host,[2] “a second USB port” connected to a consumer device, a “bridge,” and a “routing switch,” which provides two alternate connection paths: a path through the bridge when the consumer device is in “host mode” and a path bypassing the bridge when the consumer device is a “device mode”:

Claim 18	Claim 1	Claim 7	Claim 13
A communication system, comprising:	A Universal Serial Bus (USB) hub module, comprising:	An integrated circuit, comprising:	A method of operating a USB hub module having
	a first USB port configured to be connected to a USB host;		
	a second USB port configured to be connected to a consumer device;		
a USB hub ***including*** ***a first USB port and a second USB port***;	***a USB hub*** ***interconnected to*** ***the first USB port and the second USB port***;	***a USB hub*** ***configured to be*** ***interconnected to*** ***a first USB port*** connected to a USB host ***and a second USB port*** connected to a consumer device;	***a USB hub*** ***configured to be*** ***interconnected to*** ***a first USB port*** connected to a USB host ***and a second USB port*** connected to a consumer device,
a central vehicle microcontroller connected to said first USB port;			
a first consumer device connected to said second USB port;			
a USB host-to-host	a USB bridge	a USB bridge	a USB bridge

[2] The USB host in Claim 18 is in the “central vehicle microcontroller.” (’037 patent at 2:18-20 (“a central vehicle microcontroller (also referred to as the Head Unit or ‘HU’)”), 4:35-37 (“a vehicle’s embedded USB Host (such as a USB Host in a Head Unit)”).)

Claim 18	Claim 1	Claim 7	Claim 13
bridge connected to said first USB port;	interconnected to the USB hub; and	interconnected to the USB hub; and	interconnected to the USB hub, and
a USB routing switch providing a first communication path between said second USB port and said USB host-to-host bridge and a second communication path between said second USB port and said first USB port that bypasses said USB host-to-host bridge, wherein said USB routing switch connects said first communication path when the first consumer device is connected to said second USB port and is operating in a USB host mode, thereby providing bidirectional initiation of communication between the USB host and the consumer device and	a USB routing switch interconnected to the USB bridge, the USB hub, and the second USB port, wherein the USB routing switch is configured to connect the second USB port to the first USB port through the USB bridge, thereby providing bidirectional initiation of communication between the USB host and the consumer device when the consumer device connected to the second USB port is in a USB host mode and	a USB routing switch interconnected to the USB bridge, the USB hub, and the second USB port, wherein the USB routing switch is configured to connect the second USB port to the first USB port through the USB bridge thereby providing bidirectional initiation of communication between the USB host and the consumer device when the consumer device connected to the second USB port is in a USB host mode and	a USB routing switch interconnected to the USB bridge, the USB hub, and the second USB port, said method comprising the steps of: determining when the consumer device is operating in a USB host mode and in a USB device mode; connecting the consumer device via the second USB port to the USB hub via the first USB port through the USB routing switch and the USB bridge, thereby providing bidirectional initiation of communication between the USB host and the consumer device when the consumer device is determined to be in the USB host mode; and
wherein said USB routing switch connects said second communication path, thereby only responding to communication initiated by the USB host when the first consumer device is connected to said second USB port and is operating in a USB	wherein the USB routing switch is configured to connect the second USB port directly to the first USB port through the USB hub, thereby only responding to communication initiated by the USB Host when the consumer device connected to the	wherein the USB routing switch is configured to connect the second USB port directly to the first USB port through the USB hub, thereby only responding to communication initiated by the USB Host when the consumer device connected to the	connecting the consumer device via the second USB port to the USB hub via the first USB port through the USB routing switch and the USB hub thereby bypassing the USB bridge to only respond to communication initiated by the USB host when the

Claim 18	Claim 1	Claim 7	Claim 13
device mode.	second USB port is in a USB device mode.	second USB port is in a USB device mode.	consumer device is determined to be in the USB device mode.

32. Claims 1, 7, and 13 all recite "a USB hub" "***interconnected to***" first and second USB ports. Claim 18 alone states "a USB hub ***including***" first and second USB ports.

33. All four claims, however, describe the same two connection paths between the first and second USB ports: one path that connects the ports through the bridge and another that connects the ports through the hub while bypassing the bridge. For example:

- The "first USB port" is connected to a USB host—for example, a vehicle's embedded USB host or "Head Unit."
    - Claim 18 ("a central vehicle microcontroller connected to said first USB port")
    - Claim 1 ("a first USB port configured to be connected to a USB host")
    - Claims 7 & 13 ("a first USB port connected to a USB host"); *see also id.* at 2:20-21 ("central vehicle microcontroller (also referred to as the Head Unit or 'HU')"), 3:36-37 ("a vehicle's embedded USB Host (such as a USB Host in a Head Unit)").
- The "second USB port" is connected to a consumer device.
    - Claim 18 ("a first consumer device connected to said second USB port")
    - Claim 1 ("a second USB port configured to be connected to a consumer device")
    - Claims 7 & 13 ("a second USB port connected to a consumer device").
- When the consumer device is in host mode, a routing switch connects the consumer device (via the second USB port) to the USB host (via the first USB port) through a bridge.
    - Claim 18 ("said USB routing switch connects said first communication path when the first consumer device is connected to said second USB port and is operating in a USB host mode, thereby providing bidirectional initiation of communication between the USB host and the consumer device")

- Claim 1 ("the USB routing switch is configured to connect the second USB port to the first USB port through the USB bridge, thereby providing bidirectional initiation of communication between the USB host and the consumer device when the consumer device connected to the second USB port is in a USB host mode")
- Claim 7 ("the USB routing switch is configured to connect the second USB port to the first USB port through the USB bridge thereby providing bidirectional initiation of communication between the USB host and the consumer device when the consumer device connected to the second USB port is in a USB host mode")
- Claim 13 ("connecting the consumer device via the second USB port to the USB hub via the first USB port through the USB routing switch and the USB bridge, thereby providing bidirectional initiation of communication between the USB host and the consumer device when the consumer device is determined to be in the USB host mode").

- When the consumer device is in device mode, the routing switch connects the consumer device to the host directly through the hub, bypassing the bridge.
  - Claim 18 ("a second communication path between said second USB port and said first USB port that bypasses said USB host-to-host bridge…, wherein said USB routing switch connects said second communication path…when the first consumer device is connected to said second USB port and is operating in a USB device mode")
  - Claim 1 ("the USB routing switch is configured to connect the second USB port directly to the first USB port through the USB hub…when the consumer device connected to the second USB port is in a USB device mode")
  - Claim 7 ("the USB routing switch is configured to connect the second USB port directly to the first USB port through the USB hub…when the consumer device connected to the second USB port is in a USB device mode")
  - Claim 13 ("connecting the consumer device via the second USB port to the USB hub via the first USB port through the USB routing switch and the USB hub thereby bypassing the USB bridge…when the consumer device is determined to be in the USB device mode").

34. These connections paths may be further illustrated, for example, by annotating Figure 4 of the '420 patent. The path when the consumer device is in USB device mode is shown in yellow, and the path when the consumer device is in USB host mode is shown in green:

Figure 4

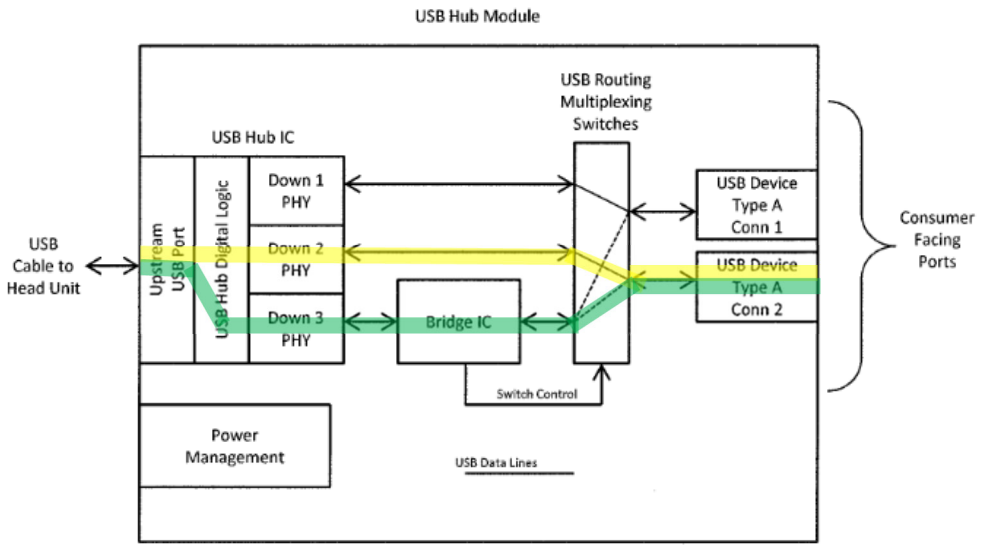

35. It would have been obvious to a POSITA, from the other independent claims and the specification, that the term "a USB hub ***including*** a first USB port and a second USB port" in Claim 18 is erroneous and should read instead, "a USB hub ***interconnected to*** a first USB port and a second USB port."

C. "a USB Hub having a plurality of USB Ports…" / "providing a USB hub having a plurality of USB ports…"

No.	Claim Term	Plaintiff's Proposed Construction	Defendant's Proposed Construction
5	"a USB Hub having a plurality of USB Ports and interconnected to the embedded USB Host system . . . a USB routing switch interconnected to the USB Bridge, the USB Hub, and the plurality of USB Ports, wherein the USB routing switch is configured to connect a first USB Port of the plurality of USB Ports to the USB Hub through the USB Bridge . . . , and wherein the USB routing switch is	Not indefinite	Indefinite

No.	Claim Term	Plaintiff's Proposed Construction	Defendant's Proposed Construction
	configured to connect the first USB Port directly to the USB Hub . . . " '037 patent, claim 1. "providing a USB hub having a plurality of USB ports interconnected to the USB host . . . automatically configuring the USB routing switch to connect a first USB Port of the plurality of USB ports to the USB hub through the USB bridge . . . ; and automatically configuring the USB routing switch to initiate bidirectional communication with the USB host, wherein the USB routing switch is configured to connect the first USB port directly to the USB hub . . . " '899 patent, claim 1.		

36. "Having" is a commonly used word that is generally understood to mean possessing. (Ex. C (https://www.merriam-webster.com/dictionary/have) (definition 1a).)

37. A USB hub can "have" USB ports that are part of the hub. For example, in the generic hub illustrated in the USB 2.0 specification, the hub has an upstream port and downstream ports #1-7.

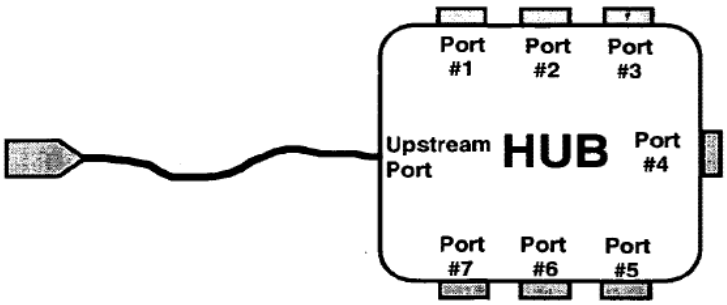

Figure 4-3. A Typical Hub

(Ex. B (USB 2.0) at 23.)

38. A USB hub can also "have" USB ports that are further downstream of the hub, which are not themselves part of the hub but are still connected to the bus by the hub.

39. In fact, that is exactly what is described by the USB 2.0 Specification. The specification defines a hub as "[a] USB device that provides additional connections to the USB [Universal Serial Bus]" (*id.* at 6) and explains:

> Hubs are wiring concentrators and enable the multiple attachment characteristics of the USB. Attachment points are referred to as ports. Each hub converts a single attachment point into multiple attachment points….***Each of the downstream ports <u>of a hub</u> allows connection to another hub or function. Hubs can detect attach and detach at each downstream port and enable the distribution of power to downstream devices.***

(*Id.* at 22.)

40. The "downstream ports ***of*** a hub" (*i.e.*, the downstream ports possessed by a hub) are the ports that allow connection to another hub or function (*e.g.*, another USB device). In other words, a hub is understood to "have"—by virtue of possessing—each downstream port that it connects to the bus. That is true regardless of whether the downstream port is part of the hub or further downstream of the hub.

41. The USB 2.0 Specification's example of a typical desktop computer environment that includes additional downstream ports in this way:

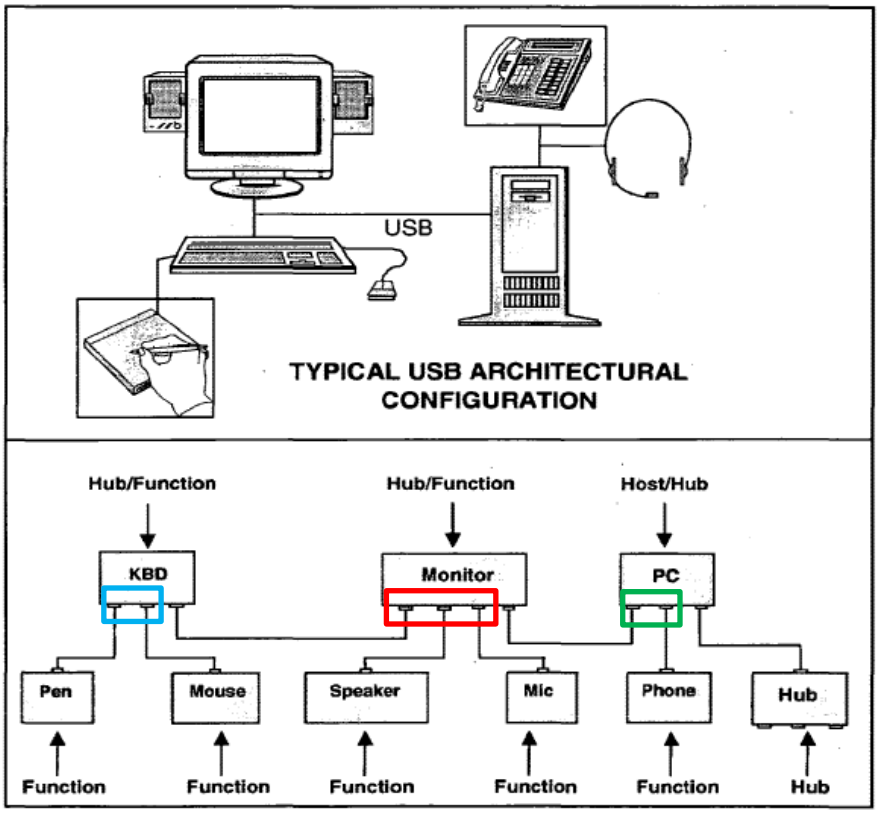

Figure 4-4. Hubs in a Desktop Computer Environment

(*Id.* at 23 (annotated).)

42. The PC (personal computer) is the host of this USB network. The PC also contains a hub, which comprises two downstream ports (in the green box). The left-most of those downstream ports connects to the monitor, which also contains a hub. The monitor hub comprises three additional downstream ports (in the red box); the left-most of those downstream ports then connects to a keyboard ("KBD"), which, again, also contains a hub. The keyboard hub comprises two additional downstream ports (in the blue box).

43. The keyboard hub connects the pen and mouse to the PC host via its downstream ports (in the blue box). The monitor hub connects the keyboard, a speaker, and a mic to the PC host via its downstream ports (in the red box). The PC hub connects the monitor and a phone to the PC host via its downstream ports (in the green box).

44. Each hub connects all of the devices downstream of that hub to the PC host. The keyboard hub connects the pen and mouse; the monitor hub connects the speaker and mic, as well as the keyboard, pen, and mouse; and the PC hub connects the phone, monitor, speaker, mic, keyboard, pen, and mouse.

45. The downstream ports that allow for the connections provided by each hub are all ports "of" the hub—or, stated differently, are ports the hub "has." In the example above, the keyboard hub "has" the ports in the blue box; the monitor hub "has" the ports in the red box, as well as the ports in the blue box; and the PC hub "has" the ports in the green box, red box, and blue box.

46. This is further illustrated in Figure 1 of the '037 patent specification. Figure 1 "illustrates a system wherein a self-powered USB Hub having a plurality of USB ports connects to a plurality of USB Devices (via a plurality of consumer-facing USB ports)." ('037 Patent at 2:3-6.)

Figure 1

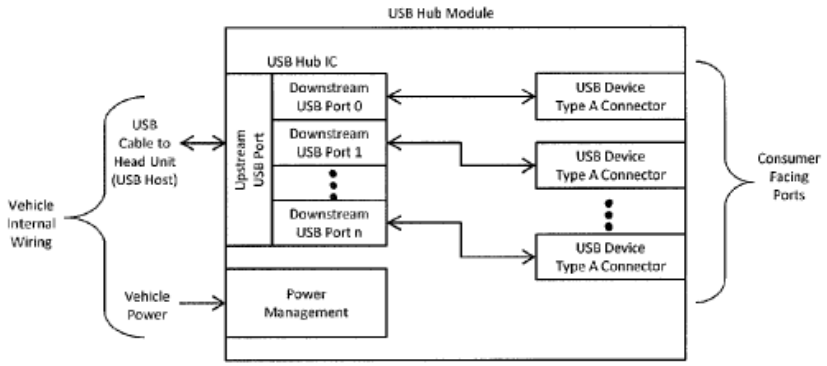

47. Figure 1 shows two sets of downstream ports: the ports labeled "Downstream USB 0" through "Port n" and the consumer-facing ports that are further downstream. The purpose of the hub is to allow the devices connected to the consumer-facing ports to connect to the host through the bus. The hub does so by connecting both sets of downstream ports to the

bus; both sets of ports are thus ports the hub "has" (*i.e.*, possesses).

D. "providing efficient communications among USB components of a data communication system"

No.	Claim Term	Plaintiff's Proposed Construction	Defendant's Proposed Construction
6	"providing efficient communications among USB components of a data communication system" '072 patent, claim 1.	Not definite	Indefinite

48. There is no common metric for efficiency in the context of USB network communication. Persons of skill in the art would therefore understand references to "efficient communications" in a USB network to be qualitative.

49. The claimed invention in the Asserted Patents was a solution to providing CarPlay capability in the automotive setting where there was a single cable between the USB hub and the head unit. The claimed invention allowed a consumer device connected to the system to operate in host mode, while at the same time allowing the car's head unit to communicate to other downstream devices. It achieved this solution without the need for a second data connection between the hub and the head unit, or for a special "On-The-Go" port to be installed, resulting in a simpler (i.e., more *efficient*) and less costly solution than was available in the prior art.

50. The specification discusses the drawbacks of these prior art approaches, including the need for additional cables and ports, in implementing a USB system in a car in which a consumer device might act in host mode. (*See, e.g.* '037 Patent at 3:18-67 (discussing OTG ports, and the need for additional "costly" cables and/or ports).) The specification also discusses how, particularly in the context of a vehicular implementation, it is important to minimize cost and mass. (*Id.* at 1:60-65.)

51. A POSITA would have understood the claim term "providing efficient communications among USB components of a data communication system" to refer to performing the claimed "receiving" and "routing" limitations on a communication system with the claimed elements. A POSITA would have understood "efficient" to be a laudatory description of the result of performing those steps on that system. Nothing in the specification suggests that the term "efficient" is a reference to any other metric or suggests it has a meaning other than to describe the result of performing those steps.

52. A POSITA would understand that by implementing the recited "receiving" and "routing" steps in Claim 1 on the system recited in the first limitation, it would achieve the desired result of providing efficient communications, including by obviating the need for additional ports or cabling.

E. "wherein the USB hub and USB bridge have different components and functionality"

No.	Claim Term	Plaintiff's Proposed Construction	Defendant's Proposed Construction
7	"wherein the USB hub and USB bridge have different components and functionality" '643 patent, claims 1, 5, and 10.	Not definite	Indefinite

53. USB hubs and USB bridges can be separate devices.

54. USB device functionality refers to the function or role a device performs, either within the USB network (*i.e.* routing signals a certain way) or for the consumer (i.e. providing a mechanism with which a user can deliver directional commands to a computer, like a mouse).

55. The term "components," in the context of a USB device, refers to the physical components that make up that USB device. In the context of USB devices that have

functionality that is predominantly within the USB network (for example hubs, which route USB signals on the USB), "components" generally refers to the specific integrated circuit, or components thereof (for example transistors, gates, controllers, resistors, etc.), that make up the USB device.

56. In the context of the claim language above, a POSITA would have understood the requirement that the "USB hub and the USB bridge have different components and functionality" to mean that the hub and the bridge (1) do not have coextensive components, such that either the hub has some component(s) that the bridge does not, vice versa, or both, and (2) do not have identical functionality such that either the hub performs some function that the bridge does not, or vice versa, or both.

57. The specification identifies a host of functions that the bridge performs that the bridge does not. (*See, e.g.* '037 Patent at Fig. 6, Fig. 7, 4:41-50, 5:67-6:2, 6:10-13, 6:40-55, 7:26-8:38.)

58. With regard to components, a POSITA would have understood that the requirement that the "USB hub and bridge have different components" does not require the physical hardware that carries out the hub and bridge functionality to be separate, but would simply mean that these components are functionally distinct and do not have co-extensive circuit components. In the context of multi-chip embodiments, as illustrated in Figure 4, this could mean that the hub functionality is performed by a different IC than performs the bridge functionality.

59. Specifically, in my opinion , a POSITA would <u>not</u> have understood this requirement to mean that the USB hub and bridge could not be on the same IC (and still have different components). To the contrary, the USB hub and bridge functionality could all be

carried out in the same IC and this requirement could be met as long as the components of the IC carrying out the hub functions are not the exact same components that carry out the bridge functions.

60. For example the paper "A 0.9-V Microcontroller for Portable Applications"[3] describes a single chip microcontroller that includes various distinct functional circuit elements ("components") such as a 68HC08 processor, read only memory (ROM), random access memory (RAM) , a phase locked lop (PLL), and liquid crystal display (LCD) driver interfaces.

> A 0.9–1.6-V, 1-MHz, 8-b microcontroller based on the 68HC08 architecture is presented. In addition to standard digital microcontroller functions, the chip features RAM, ROM, phase-locked loop (PLL) clock synthesis, and liquid crystal displays (LCD) drive capabilities operating from the voltage supply range of a single AA or AAA battery.

(*Id.* at Abstract.)

61. The paper also provides a photograph if the controller die (chip) that illustrates these distinct components all implemented on a single silicon chip).

[3] "A 0.9-V Microcontroller for Portable Applications" by Wild et al. Published in the IEEE Journal of Solid-State Circuits, Vol. 32, No. 7, © 1997 IEEE.

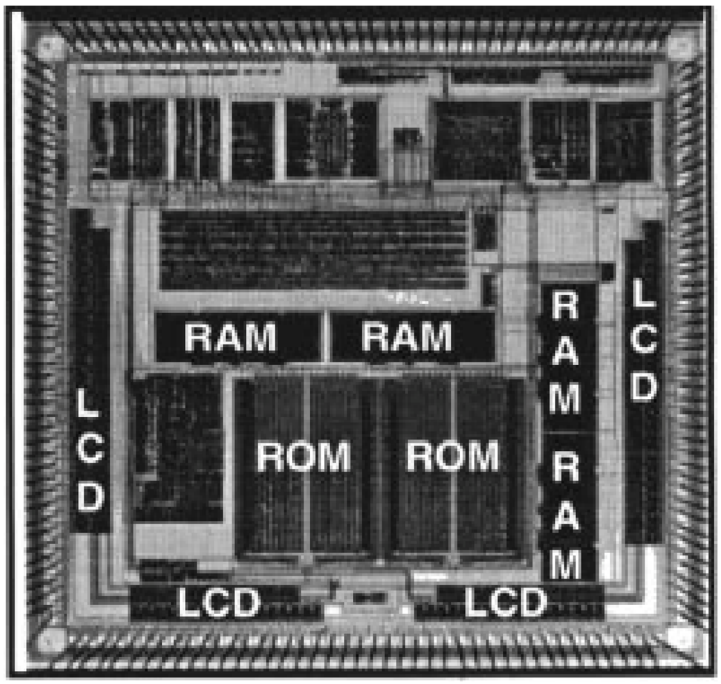

62. Of course, a POSITA would have also understood that each of these components (processor, RAM, ROM and LCD driver) could also be physically separate, and the system would still perform the same functions it would perform were they integrated on a single chip, as shown above. This is similar to, for example, the system illustrated in Figure 4, where the distinct functional elements of a hub, a bridge, and a switch could be implemented as separate interconnected chips in a single enclosure, or could be implemented as distinct functional elements on a single silicon chip. In my opinion a POSITA would have been familiar with this sort of implementation, and would not have considered the claim term to require that these functions *must* be implemented using separate chips.

F. "signal detection circuit"

Claim Term	Plaintiff's Proposed Construction	Defendant's Proposed Construction
"signal detection circuit" '643 patent, claims 1 and 5	35 U.S.C. § 112(f) does not apply; not indefinite	Indefinite means-plus-function term. Function: determining whether a connected device is operating in host mode. Corresponding structure: none.

63. I understand that Microchip contends that the term "signal detection circuit" in the claims of the '643 patent is in "means-plus-function form" and its scope is limited to corresponding structure disclosed in the written description of the specification that the written description or the prosecution history clearly links or associates to performing the function recited in the claim.

64. I am informed by counsel that when a claim term lacks the word "means," there is a presumption that the rules of means-plus-function claiming, as described above, do not apply. I am informed, however, that the presumption is not a strong presumption and can be overcome. I further am informed that the essential inquiry is whether the words of the claim are understood by a POSITA to have a sufficiently definite meaning as the name for structure, and that to determine whether a claim recites sufficient structure it is sufficient if the claim term is used in common parlance or by a POSITA to designate structure, even if the term covers a broad class of structures and even if the term identifies the structures by their function.

65. The term "circuit" is understood by a POSITA as a name for structure. The Comprehensive Dictionary of Electrical Engineering, 2nd Ed. (2005) defines "circuit" as "a physical device consisting of an interconnection of elements, or a topological model of such a device. For example, an electric circuit may be constructed by interconnecting a resistor and a

capacitor to a voltage source." (Ex.D at 112.)

66. In claims 1, 5, and 9 of the '634 patent, the claims use the phrase "signal detection circuit," further limiting the class of circuit structures to that group of structures that perform "signal detection." The Comprehensive Dictionary of Electrical Engineering, 2nd Ed. (2005) further defines "signal detection" as "detecting the presence of a signal in noise." (*Id.* at 627.)

67. In the context of the claims of the '643 patent, which relate to USB signaling, a POSITA would have understood "signal detection circuit" to be the name for a class of structures that can be used to receive and identify USB signals on the physical lines used to connect USB devices.

68. Specifically, a POSITA would have understood the term "signal detection circuit" in the context of the '643 patent as a circuit capable of detecting signals related to the system configuration as described in sections 4.6, and 7.1 of the USB 2.0 specification. For example Section 4.6 describes detecting the attachment, enumeration, and removal of USB devices.

> **4.6.1 Attachment of USB Devices**
> All USB devices attach to the USB through ports on specialized USB devices known as hubs. Hubs have status bits that are used to report the attachment or removal of a USB device on one of its ports. The host queries the hub to retrieve these bits. In the case of an attachment, the host enables the port and addresses the USB device through the device's control pipe at the default address.
>
> The host assigns a unique USB address to the device and then determines if the newly attached USB device is a hub or a function. The host establishes its end of the control pipe for the USB device using the assigned USB address and endpoint number zero.
>
> If the attached USB device is a hub and USB devices are attached to its ports, then the above procedure is followed for each of the attached USB devices.
>
> If the attached USB device is a function, then attachment notifications will be handled by host software that is appropriate for the function.
>
> **4.6.3 Bus Enumeration**

> Bus enumeration is the activity that identifies and assigns unique addresses to devices attached to a bus. Because the USB allows USB devices to attach to or detach from the USB at any time, bus enumeration is an on-going activity for the USB System Software. Additionally, bus enumeration for the USB also includes the detection and processing of removals.
>
> **4.6.2 Removal of USB Devices**
> When a USB device has been removed from one of a hub's ports, the hub disables the port and provides an indication of device removal to the host. The removal indication is then handled by appropriate USB System Software. If the removed USB device is a hub, the USB System Software must handle the removal of both the hub and of all of the USB devices that were previously attached to the system through the hub.

(*See* Ex. B, (USB 2.0) at 3-10, 20.)

69. Section 7.1 describes specifically the various signal detection circuits used for data communication, which includes the detection of the signaling bits described above in the context of device attachment, enumeration, and removal. For example Figure 7-1 provides an example of a high speed transceiver circuit, which includes both differential driver (outbound signals) and receiver (inbound signals) circuits that would be used to convey higher level protocol information such as addresses, device types, and functions, as well as transmission and removal envelop detection circuits (signal detection circuits that detect the envelope or amplitude versus time characteristic signal, which a POSITA would have understood to be a least a portion of the data carried by that signal) used to indicate the start of transmission, and the removal of a device, which is also conveyed to the higher level protocol functions to initiate configuration and data transfer, or to terminate a connection.

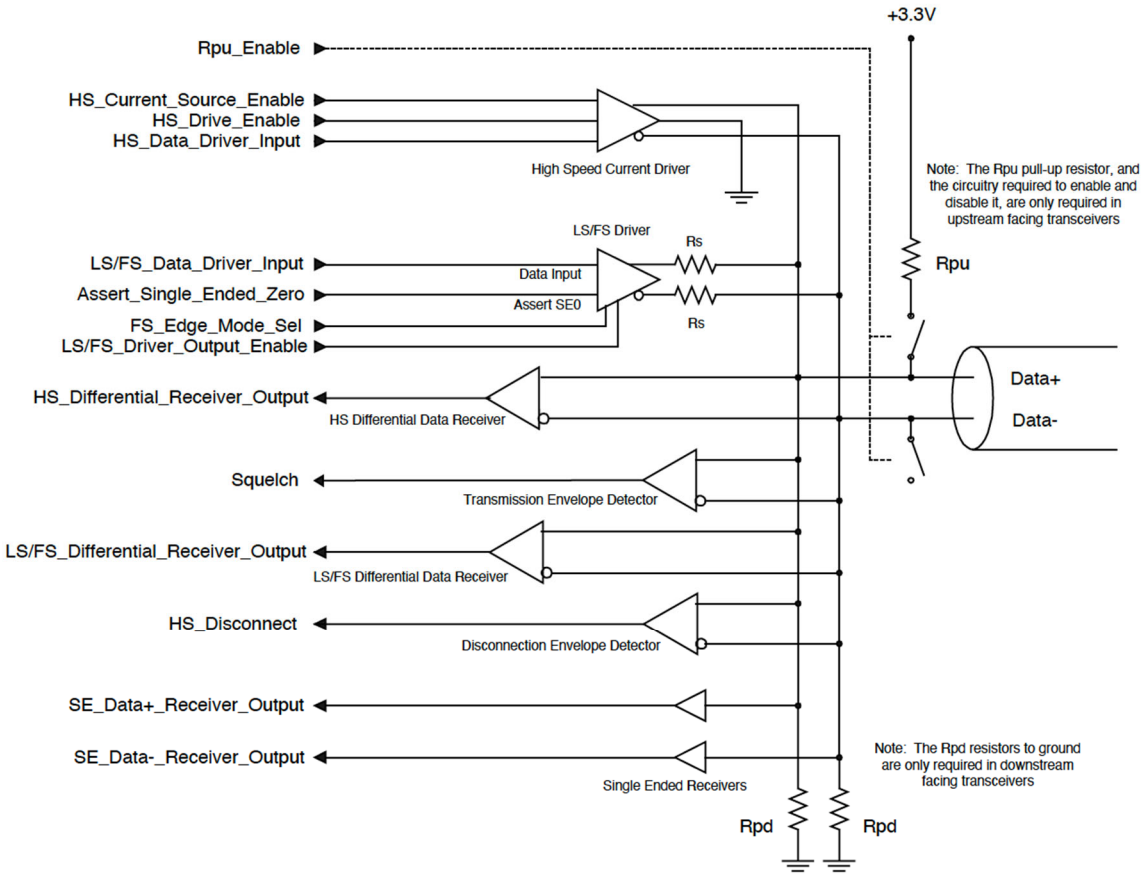

Figure 7-1. Example High-speed Capable Transceiver Circuit

(*See id.* at Figure 7-1; *see also* sections 7.1, Table 7-1, 7.1.7.3, 7.1.7.4.)

70. In addition, a POSITA would have understood that the device attachment, enumeration (including address assignment, device type determination, etc.), and removal, while conveyed by physical signals, also represent data which is used at a *logical* level to detect (from received data bits that are detected within the electrical signals of the physical layer) device types, addresses and other configuration information. These logical signals are thus detected by the data processing circuits within the USB host, the USB hub, and the USB devices). This is illustrated by Figure 5-9 of the USB 2.0 specification, reproduced with annotation below.

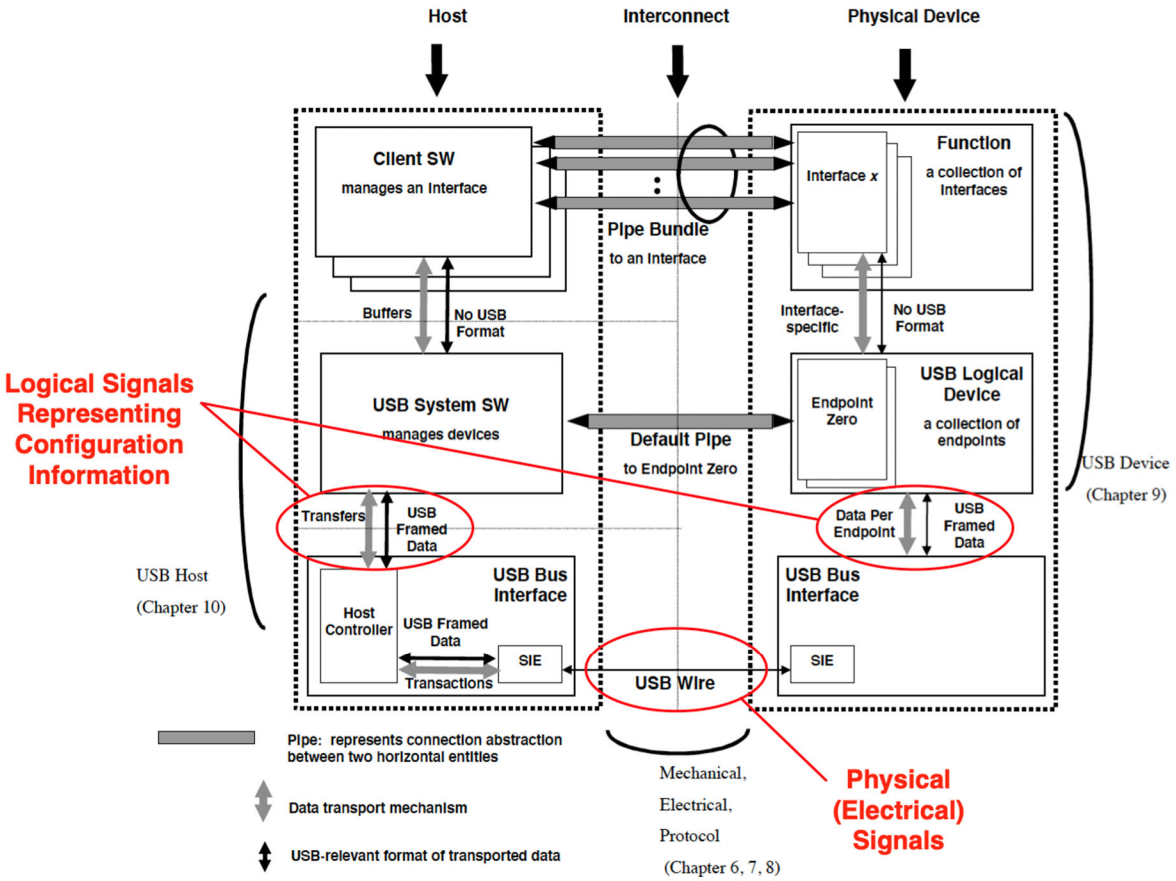

Figure 5-9. USB Host/Device Detailed View

(*See id.* at Figure 5-9.)

71. As described above, devices operating in host mode and devices operating in device mode can generate different signals under the USB specification, and during enumeration the mode can be detected based on signals received by a hub from a connected device. The claims of the '643 patent use "signal detection circuit," consistent with how a POSITA would have understood to term, to refer to this class of circuits that receive USB signals and determine whether those signals are coming from a USB device that is operating in host mode or a device that is operating in device mode.

G. "routing logic circuit"

No.	Claim Term	Plaintiff's Proposed Construction	Defendant's Proposed Construction
9	"routing logic circuit" '643 patent, claims 1, 5, and 10.	Not indefinite	Indefinite

72. Unlike "signal detection circuit," I understand that Microchip does not contend that the term "routing logic circuit" in the claims of the '643 patent is in "means-plus-function form," but instead solely asserts that the term is indefinite.

73. A POSITA would have understood that "routing logic circuit" refers to a class of circuits that direct signals from one I/O interface to another. One example of "routing logic circuitry" in the context of the '643 patent would be the circuits inside a USB multiplexing switch, as is disclosed in Figure 4, where a set of USB Routing Multiplexing switches are used to allow consumer facing ports 1 and 2 to either communicate with downstream port 3 of the hub via the bridge, or to communicate directly with downstream ports 1 and 2 of the hub respectively. Because the signals are digital, a POSITA would have understood that this routing could be implemented using electronically controlled switches, or using digital logic gates.

Figure 4

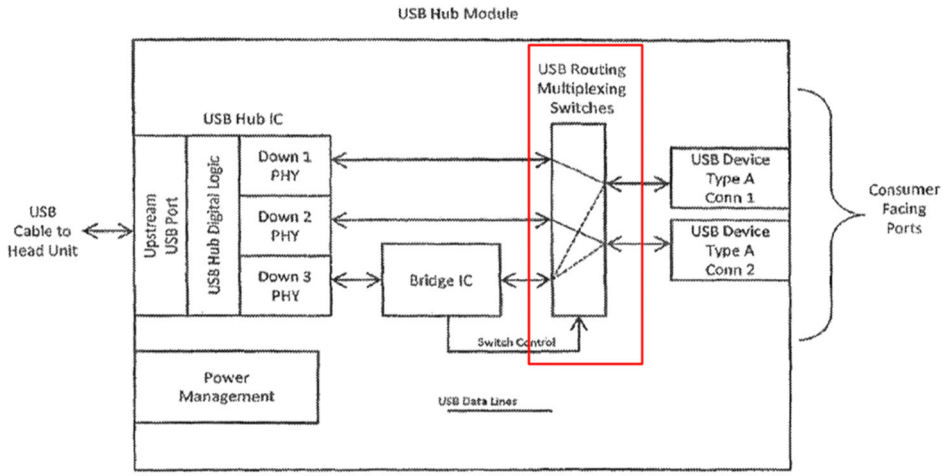

74. A POSITA would have recognized that another example of a "routing logic circuit" would be the circuitry to implement the "USB Routing Logic" in the integrated circuit for the "Combo USB Hub/Bridge" of Figure 5. This routing logic circuitry connects the downstream ports directly to the hub logic, or it routes the signals associated with these ports to the hub via the bridge.

Figure 5

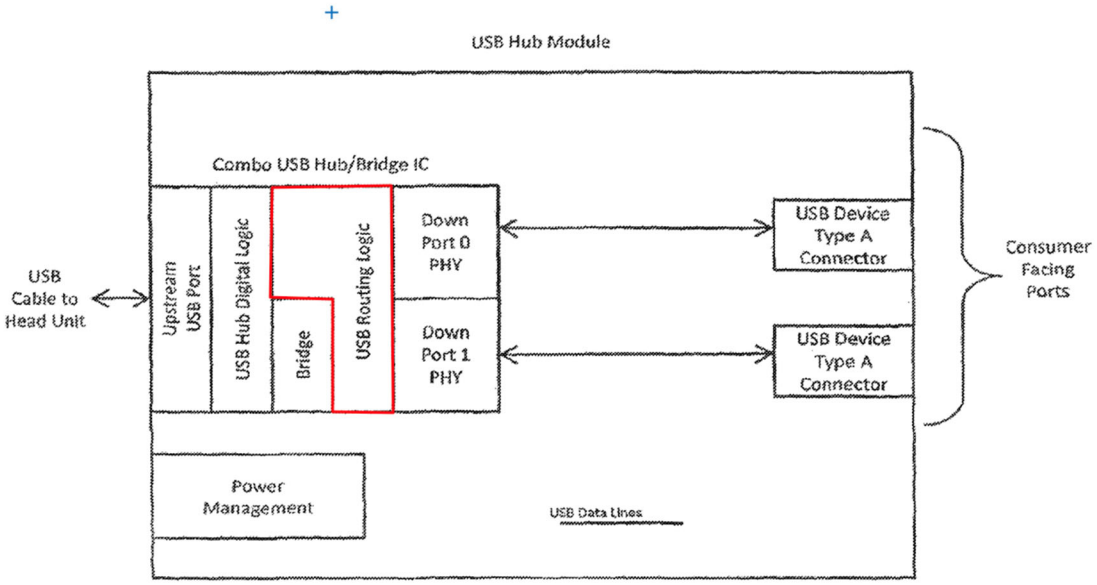

75. Figure 6 offers yet another example of routing logic, wherein the downstream ports 1-n are selectively interconnected to ports on the hum, or to a hub port by way of a bridge.

Figure 6

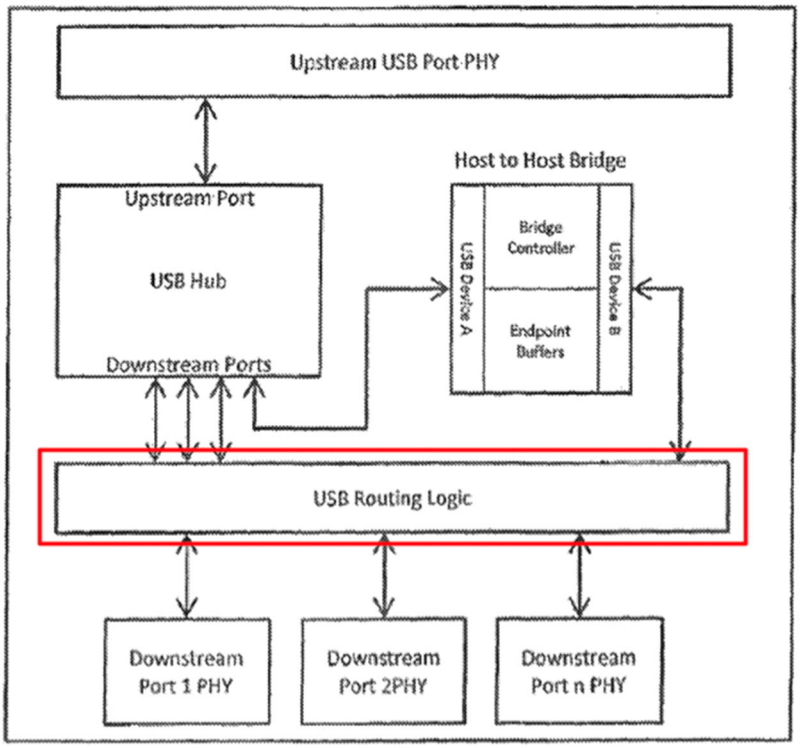

76. Importantly, a POSITA would have understood that the claims themselves identify the nature of the routing (i.e., what is routed where), the implementation of this routing circuitry (e.g., switches, logic gates, etc.), and how the routing is controlled (e.g., control lines, port identifiers, or addresses, etc.) are a matter of design choice. Stated differently, a POSITA would have understood that there are numerous well-known technologies and circuit techniques for routing signals that could be applied to implement the routing logic circuit and perform the functions (i.e., what is routed to where) that are claimed.

H. "some combination of embedded devices and consumer devices that are USB Devices along with at least one that is the second USB Host"

No.	Claim Term	Plaintiff's Proposed Construction	Defendant's Proposed Construction
10	"some combination of embedded devices and consumer devices that are USB Devices along with at least one that is the second USB Host" '037 patent, claim 16.	Not indefinite	Indefinite

77. One of the goals of the claimed invention was to allow a user to connect a mobile phone in host mode to a car's infotainment system, enable host-to-host communication between that device and the head unit, and allow the head unit to continue active data connections with other downstream devices (besides the consumer device that is in host mode). *See,* '037 Patent at 8:59-63

78. Under the prior art solutions, such as using OTG ports and effectively flipping the direction of the USB network, one downside was that upon connecting a second host and initiating the switch in direction, the old host would become a device of the new host, and all of the devices that were downstream of that old host (but not downstream of the current host) would lose data connectivity. (*See* '037 Patent at 3:56-64 (discussing this downside of the prior art solutions).)

79. In the automotive setting, this would apply to both embedded USB devices (for example some speaker systems were connected via USB) and any consumer devices other than the device in host mode being plugged into the infotainment system. Thus, the claimed invention allows the car's head unit (the original host) to maintain data connectivity to the downstream USB devices (both embedded and non-embedded devices) when a consumer device

is plugged in an in host mode. The specification discusses this benefit of the claimed invention over the prior art. (*See, e.g.* '037 Patent at 8:59-63 (configuration "allowing concurrent operation of consumer devices operating in USB Device mode with consumer devices operating in USB Host mode.").)

80. A POSITA would have understood that configuring a system as directed by the Asserted Patents in a way that allows that data connectivity to persist during host-to-host communication between the head unit and the consumer device in host mode would enable such data connectivity between the head unit and any of those other downstream USB devices. As the number of different combinations of host and downstream devices attached to a vehicle host device could be quite large and varied, the patent refers to this as "some combination" as the invention is not limited to any particular or specific combination of devices, but instead could be applied to many different combinations.

I declare under penalty of perjury that the foregoing is true and correct. Executed this 17th day of January 2024 in Petaluma, California.

Scott Andrews

CERTIFICATE OF SERVICE

I hereby certify that on January 17, 2024, I certify that I caused copies of the foregoing document to be served on January 17, 2024, upon the following in the manner indicated:

Jack B. Blumenfeld Brian P. Egan Travis J. Murray MORRIS, NICHOLS, ARSHT & TUNNELL LLP 1201 North Market Street P.O. Box 1347 Wilmington, DE 19899-1347 jblumenfeld@morrisnichols.com began@morrisnichols.com tmurray@morrisnichols.com	*VIA ELECTRONIC MAIL*
John M. Neukom Barbara N. Barath Yuqing Cui Alexander H. Lee DEBEVOISE & PLIMPTON LLP 650 California Street San Francisco, CA 94108 jneukom@debevoise.com bnbarath@debevoise.com ycui@debevoise.com ahlee@debevoise.com	*VIA ELECTRONIC MAIL*
Andrew Gish Edward Tulin Ryan K. Iwahashi GISH PLLC 41 Madison Avenue, Floor 31 New York, NY 10010 andrew@gishpllc.com edward@gishpllc.com ryan@gishpllc.com	*VIA ELECTRONIC MAIL*

/s/ Janelle Cotton
Janelle Cotton

Microchip Ex. 1076, p. 60
Microchip v. Aptiv
IPR2024-00496