IN THE UNITED STATES PATENT AND TRADEMARK OFFICE

In re Patent of:	Martin Koebler, et al.	
U.S. Patent No.:	10,882,399	Attorney Docket No.: 49649-0022IP1
Issue Date:	January 5, 2021	
Appl. Serial No.:	16/433,703	
Filing Date:	June 6, 2019	

Title: ELECTRIC VEHICLE POWER MANAGEMENT SYSTEM

SUPPLEMENTAL DECLARATION OF VASSILIOS MORELLAS

I hereby declare that all statements made of my own knowledge are true and that all statements made on information and belief are believed to be true. I further declare that these statements were made with the knowledge that willful false statements and the like so made are punishable by fine or imprisonment, or both, under Section 1001 of the Title 18 of the United States Code.

Dated: 02/10/2025 By:

Vassilios Morellas

TESLA 1053
Tesla, Inc. v. iQAR Inc.
IPR2024-00499

TABLE OF CONTENTS

I. INTRODUCTION 4
II. BACKGROUND AND QUALIFICATIONS 5
III. INFORMATION CONSIDERED 5
IV. LEVEL OF ORDINARY SKILL IN THE ART 7
V. RELEVANT LEGAL STANDARDS 7
VI. SUMMARY OF OPINIONS 7
VII. OVERVIEW OF THE ’399 PATENT 8
A. Specification 8
B. Claims 8
C. Prosecution History 8
VIII. PRIOR ART ANALYSIS 8
A. Level of Ordinary Skill in the Art 9
B. Claim Interpretation 10
1. Specification 12
2. Claim Language 15
C. Application of the Hongo-Obradovich-Niki Combination to Claim 1 36
1. Hongo’s Block Number (BKN) Identification Techniques 37
2. Hongo’s Adaptive Cruise Control 41
3. Hongo’s Target Vehicle Speed 47

D. Application of the Hongo-Obradovich-Niki Combination to Claim 6 49

E. Application of the Hongo-Obradoivch-Niki-Newstrom Combination to Claim 8 52

I, Vassilios Morellas, declare that:

I. INTRODUCTION

1. I have been retained on behalf of Tesla, Inc. ("Tesla"), as an independent expert consultant in this *inter partes* review ("IPR") proceeding before the Patent Trial and Appeal Board ("PTAB") of the United States Patent and Trademark Office ("USPTO"). I understand that the proceeding number of this IPR proceeding is IPR2024-00543.

2. I have been asked by Tesla's counsel ("Counsel") to consider whether certain references describe or make obvious features recited in claim 2 of U.S. Patent No. 10,882,399 ("the '399 patent") (TESLA-1001). My opinions and the bases for my opinions are set forth below. My opinions are based on my education, my knowledge and experience in the relevant fields of technology, and my review of the materials considered in preparing this document.

3. I previously submitted a declaration in this proceeding that I signed on February 1, 2024 ("Declaration"). I understand that the Declaration was marked as TESLA-1003. The Declaration contained my opinions and the bases for them. Since submitting the Declaration, I have considered the Declaration of Dr. Craig J. Hoff ("Hoff Declaration") (EX-2007). My opinions from my previous Declaration have not changed.

II. BACKGROUND AND QUALIFICATIONS

4. My background and qualifications are set forth in the Declaration. I incorporate that section in this declaration ("Supplemental Declaration") by reference.

III. INFORMATION CONSIDERED

5. In preparing this Supplemental Declaration, I have considered documentary materials referenced in the table below. In addition, my opinions are further based on my education, training, experience, and knowledge in the relevant fields.

Document Identifier	**Description**
TESLA-1001	U.S. Patent No. 10,882,399 ("the '399 patent")
TESLA-1002	Excerpts from the Prosecution History of the '399 Patent ("the Prosecution History")
TESLA-1004	Complaint, *iQar Inc. v. Tesla, Inc.*, 1:23-cv-00694, W.D. Tex., June 20, 2023
TESLA-1005	Certified Translation of Japanese Pat. Pub. No. JP 2003-276472 ("Hongo")
TESLA-1006	Translation Certification for TESLA-1005
TESLA-1007	Japanese Pat. Pub. No. JP 2003-276472 ("Hongo2")

TESLA-1008	U.S. Pat. No. 6,282,464 ("Obradovich")
TESLA-1009	U.S. Pat. No. 7,059,435 ("Niki")
TESLA-1010	U.S. Pat. App. Pub. No. US 2005/0251325 ("Kudo")
TESLA-1011	U.S. Pat. No. 6,314,347 ("Kuroda")
TESLA-1012	U.S. Pat. No. 7,552,008 ("Newstrom")
TESLA-1013	U.S. Pat. No. 8,229,644 ("Boecker")
TESLA-1014	U.S. Pat. No. 6,420,975 ("DeLine")
TESLA-1015	Trach, Walter, Jr. et al., "Driver Assistive Systems for Rural Applications: Digital Mapping of Roads for Lane Departure Warnings ("Trach")
TESLA-1016	Mukhachev P. A. et al., "Modern Machine Learning Methods for TelemetryBased Spacecraft Health Monitoring," Automation and Remote Control, 2021, Vol. 82, No. 8, pp. 1293–1320 (2021)
TESLA-1017	Gorjestani A. et al., "Radar Based Longitudinal Virtual Bumper Collision Avoidance System Implemented on a Truck" (Feb. 1999)
TESLA-1018	Walker, Jearl, "Fundamentals of Physics," 10th Edition, Halliday & Resnick, ISBN 978-1-118-23072-5 ("Walker")

TESLA-1019	U.S. Pat. App. No. 2004/0180670 ("Pande")
TESLA-1020	U.S. Pat. No. 7,860,647 ("Amano")
TESLA-1021	U.S. Pat. No. 7,460,946 ("Shima")
TESLA-1022	U.S. Pat. No. 6,675,085 ("Straub")
EX-2007	Hoff Declaration
TESLA-1055	Excerpts of Merriam Webster's Collegiate Dictionary, Eleventh Edition (2003)

IV. LEVEL OF ORDINARY SKILL IN THE ART

6. I set forth a definition of a person of ordinary skill in the art ("POSITA") in the Declaration, and I incorporate that definition here by reference.

V. RELEVANT LEGAL STANDARDS

7. I set forth the relevant legal standards in the Declaration, and I incorporate those legal standards here by reference.

VI. SUMMARY OF OPINIONS

8. I have been asked to consider whether the claims of the '399 patent are anticipated or obvious over certain prior art references. As explained in the Declaration, and in further detail in this Supplemental Declaration, it is my opinion that:

- Claims 1, 2, 5, 6, 9-12, 15, 16, 19, and 20 of the '399 patent are made obvious by Hongo, Obradovich, and Niki

- Claims 3, 4, 13, and 14 of the ’399 patent are made obvious by Hongo, Obradovich, Niki, and Kudo
- Claims 7 and 17 of the ’399 patent are made obvious by Hongo, Obradovich, Niki, and Kuroda
- Claims 8 and 18 of the ’399 patent are made obvious by Hongo, Obradovich, Niki, and Newstrom

VII. OVERVIEW OF THE ’399 PATENT

A. Specification

9. I summarized the ’399 patent specification in the Declaration, and I incorporate that summary here by reference.

B. Claims

10. I summarized the ’399 patent claims in the Declaration, and I incorporate that summary here by reference.

C. Prosecution History

11. I summarized the ’399 patent claims in the Declaration, and I incorporate that summary here by reference.

VIII. PRIOR ART ANALYSIS

12. The Declaration analyzed how prior art combinations involving Hongo, Obradovich, Niki, Kudo, Kuroda, and Newstrom described the features recited in claims 1-20. I incorporate that analysis here by reference. In this

Supplemental Declaration, I further address statements from Dr. Hoff relating to the prior art discussed in the Declaration.

A. Level of Ordinary Skill in the Art

13. As explained in the Declaration, a person of ordinary skill in the art ("POSITA") would have had "a bachelor's degree in electrical engineering, computer engineering, mechanical engineering, civil engineering (transportation systems), physics, or a related field, and at least four years of experience (or the academic equivalent) in the field of transportation systems." TESLA-1003, ¶27.

14. According to Dr. Hoff, a POSITA would have "had a degree in mechanical engineering, electrical engineering, computer engineering or an equivalent field, along with 2 years of professional experience working with automotive applications including powertrains, vehicle control systems and vehicle navigation systems, or an equivalent level of skill, knowledge, and experience." Ex-2007, ¶43. While this is a different definition of the level of ordinary skill for a POSITA, either definition is sufficient for the purposes of the prior art analyses discussed in my original Declaration. For example, each of the proposed definitions involve formal education in mechanical engineering, electrical engineering, and computer engineering, and further reference related or equivalent fields.

15. Based on my knowledge, skill, and experience in the relevant fields, and my review of the '399 patent specification, a person with the formal education discussed in the preceding paragraph and "2 years of professional experience working with automative applications including powertrains, vehicle control systems and vehicle navigation systems, or an equivalent level of skill, knowledge, and experience" (as referenced in Dr. Hoff's POSITA definition) would have had the sufficient education, training, and professional experience to understand various aspects of the prior art teachings discussed in my original Declaration. *Compare* Ex-2007, ¶43 *and* TESLA-1003, ¶¶27-28. As examples, a POSITA as defined by Dr. Hoff would have had sufficient education, training, and professional experience to combined the combined the teachings of the prior art as discussed in my original Declaration (*see, e.g.*, TESLA-1003, ¶¶76-89, 168-73, 182-85, 189-95), and how the teachings of the prior art combinations are applied to the features described in the '399 patent claims (*see, e.g., id.*, TESLA-1003, ¶¶90-130, 151-61).

B. Claim Interpretation

16. As explained in the Declaration, I understand that the best indicator of claim meaning is its usage in the context of the patent specification as understood by one of ordinary skill. TESLA-1003, ¶199. I further understand that the words of the claims should be given their plain meaning unless that meaning is inconsistent

with the patent specification or the patent's history of examination before the Patent Office. The words of the claims should also be interpreted as they would have been interpreted by one of ordinary skill at the time of the invention was made (not today). My opinions in this section are based on these understandings.

17. In this Supplemental Declaration, I address interpretations of claim terms that were introduced in this proceeding after the Declaration. The first interpretation is by a three-judge panel of the PTAB ("Panel"). I understand that the Panel preliminary found that "claim 1 does not specify how or when electric power and speed are calculated," and that there is no requirement in claim that for "electric power and speed for a route segment [to] be calculated prior to the vehicle traveling along the segment." Dec., 16. The Panel also found that "[t]he recited *applying* calculated electric power to a vehicle to travel along the segment at a calculated speed at least implies that the vehicle is traveling along the segment." *Id.* (emphasis in original). Based on my knowledge and experience in the relevant fields, and my review of the '399 patent specification and its file history, I agree with the preliminary findings in the Institution Decision. These preliminary findings are also consistent with my opinions in the Declaration and opinions in this Supplemental Declaration. I also disagree with various statements in the Hoff Declaration, which are addressed in detail below.

1. Specification

18. The specification describes power optimization techniques through calculation of an "efficient speed." TESLA-1001, 2:21-63, 5:31-55. This calculation involves two values. The first value is a "probable optimal speed," which is derived from historical data reflecting the most energy-efficient speed previously recorded for a segment. The second value is a "optimized speed," which is computed in real-time using physics-based energy calculations based on environmental factors, vehicle status, and operational parameters. *Id*., 19:33-45.

19. The "probable optimal speed" and "optimized speed" values are appropriately weighted to determine the most effective speed for energy-efficient travel, which is the "efficient speed." TESLA-1001, 19:33-45. Once the "efficient speed" is calculated, the system calculates and applies a corresponding electric power required to maintain that speed. *Id.*, 19:46-61. This ensures that the vehicle consumes the least energy necessary while still maintaining the optimal speed for the given segment, adapting both to historical efficiency trends and real-time driving conditions. *Id*.

20. The general framework discussed above is expressed in various exemplary techniques described in the specification. As explained below, a POSITA would have understood that the specification describes techniques that involve predictive application of electric power prior to a vehicle reaching a

particular segment. The techniques also include those where the application of electric power occurs while a vehicle is traveling within a particular segment. This understanding is confirmed by the specification, which explains that "[e]nergy efficient speeds for **current and upcoming route segments** can then be calculated based on the route." TESLA-1001, 5:31-55 (emphasis added).

21. Based on my review of the specification and the claims of the '399 patent, I find that the claims are not limited to any of the exemplary techniques described in the specification. This finding is based on a lack of limiting language within the claims. I am also unable to identify any description within the specification indicating that the invention should be limited in scope to specific exemplary techniques.

22. For example, claim 1 describes a process that includes ***determining a segment of a vehicle route*** ([1.a]) and ***applying a calculated electric power to a vehicle to travel along the segment of the vehicle at a calculated speed*** ([1.c]). In these limitations, the ***calculated speed*** encompasses the "efficient speed," which as explained above, includes a weighted combination of the "probable optimal speed" and the "optimized speed." The process recited in claim 1 (when understood in light of the specification) encompasses evaluation of historical and real-time data.

23. Figures 5 and 6 provide examples of how the process described in claim 1 may be interpreted to include evaluation of historical information

associated with a current segment of vehicle travel. If the "efficient speed" is calculated based on historical information (e.g., Figure 5), this calculation involves determination as a vehicle is traveling through a segment (i.e., a current segment). TESLA-1001, 18:53-67 ("…FIG. 5 illustrates a continuous process, in which the power management device can determine a probable optimal speed as the current segment changes (e.g., as the vehicle moves)"). Additionally, if power calculations are iteratively performed for each segment, the electric power is applied while traveling through a corresponding segment. *Id*.

24. In my opinion, the specification would have indicated to a POSITA that [1.a] and [1.c] are not limited to power application to "not yet traveled segment[s]." A POSITA reviewing the specification would have identified the descriptions of Figures 5 and 6 and recognized that the claims encompass power application while the vehicle is traveling through a current segment.

25. Figure 5 describes a method for determining a probable optimal speed by retrieving historical route information, segmenting the route, and identifying the most energy-efficient speed based on past trips. TESLA-1001, 18:25-67. This illustrates how the system continuously evaluates the vehicle's current location to determine the appropriate segment and corresponding historical speed. *Id.* Figure 6 provides an example of a system architecture that integrates multiple logic components for computing the "efficient speed" and apply the corresponding

calculated electric power , including "statistical destination logic," "simulated energy requirement logic," and "derived efficient speed logic." *Id.*, 21:11-55. In this example, "simulated energy requirement logic may determine a **calculated optimized speed** for the vehicle, and statistical route analysis logic may be used to determine a **probable optimal speed**." *Id.*, 21:1-10 (emphasis added). Further, the "derived efficient speed logic" "determines the **most efficient speed or power** to be applied to the vehicle engine, as described above." *Id.* (emphasis added).

26. As explained below, Figures 5 and 6 confirm that the specification contemplates power optimization techniques in which a vehicle's current segment is determined and used in calculating the "efficient speed." This speed is used to dynamically apply power while the vehicle travels through the segment. These techniques satisfy the requirements of [1.a] and [1.c] without a prospective determination of the a "not yet travelled segment."

2. Claim Language

27. I understand that the Hoff Declaration provides statements regarding elements described in claims 1 and 11. *See* Ex-2007, ¶¶78, 90, 163, 171-179, 185-88, 190, 204, 206, 217, 226. These statements relate to limitations [1.a], [1.c], [11.c.1], and [11.c.2]. I disagree with the statements in these paragraphs for the reasons discussed below. Based on my review of the claims and the specification,

and my knowledge of the relevant technological fields, I find that the Hoff Declaration interprets the claims in a way that contradicts their plain meaning.

28. I also understand that the Hoff Declaration provides statements regarding descriptions from the specification that relate to claim interpretation. *See* Ex-2007, ¶¶78, 90, 163, 171-179, 185-88, 190, 204, 206, 217, 226. I disagree with the statements in these paragraphs for the reasons discussed below. Based on my review of the specification, and my knowledge of the relevant technological fields, I find that the Hoff Declaration interprets the claims in a way that contradicts the specification. I also note that Dr. Hoff has not identified a definition of key claim terms and elements (***segment***, ***vehicle route***, calculation/application of ***electric power***) that I discuss below. Based on my review of the specification, I find that the specification does not provide a specific definition of these terms.

a. ***Segment*** ([1.a], [11.c.1])

i. Requirements Under Plain Meaning

29. Claims 1 and 11 describe a ***segment*** that is ***of a vehicle route***. This represents use of ordinary language to describe that the ***segment*** is part of a ***vehicle route***. In reading the relevant limitations of claims 1 and 11 that use this language ([1.a], [11.c.1]), I note that the plain meaning of "segment" is "a separate piece of something." TESLA-1055, 5. A POSITA would have understood that reference to ***segment*** in claims 1 and 11 relation to the clause ***of a vehicle route*** is "a separate

piece of a vehicle route." Additionally, the plain meaning of "route" is "a traveled way." TESLA-1055, 4. A POSITA would have understood that ***segment of a vehicle route*** means "a separate piece of a traveled way of a vehicle."

30. Based on my review of the claim language, I note that there is no language that limits the temporal characteristics of the ***segment*** in relation to vehicle's current position while traveling. This suggests the ***segment*** in claims 1 and 11 is broader than examples of segments, such as "**current** route segment" and "**upcoming** route segments") (or "next segments"). TESLA-1001, 3:55-4:15 (emphasis added); *see also id.*, 5:31-55.

31. Based on my review of the specification, the plain meaning understanding discussed above is supported by examples of power optimization techniques described in the '399 patent. The specification's power calculation disclosure describes examples of calculating a "probable optimal speed" using a current segment. TESLA-1001, 18:4-67. This "probable optimal speed" is further used to calculate an "efficient speed" (e.g., using logic depicted in Figure 6). *Id.*, 21:1-55. The "efficient speed" may be a weighted combination of the "probable optimal speed" generated by the Figure 5 technique and an "optimized speed" generated by the technique shown in Figures 4A and 4B. *Id.*, 21:1-10; *see id.*, 14:47-17:37. The system then applies "electric power" to the vehicle to travel along that current segment at the " efficient speed." *See, e.g.*, *id.*, 11:44-63.

32. The specification also explains that a segment associated with a vehicle's current position may be used in calculating a probable optimal speed associated with vehicle travel. *See, e.g.*, TESLA-1001, 5:38-43, 14:17-24, 18:4-67. One example of this is shown in Figure 5, which depicts a method where a current segment is used to determine a "probable optimal speed."

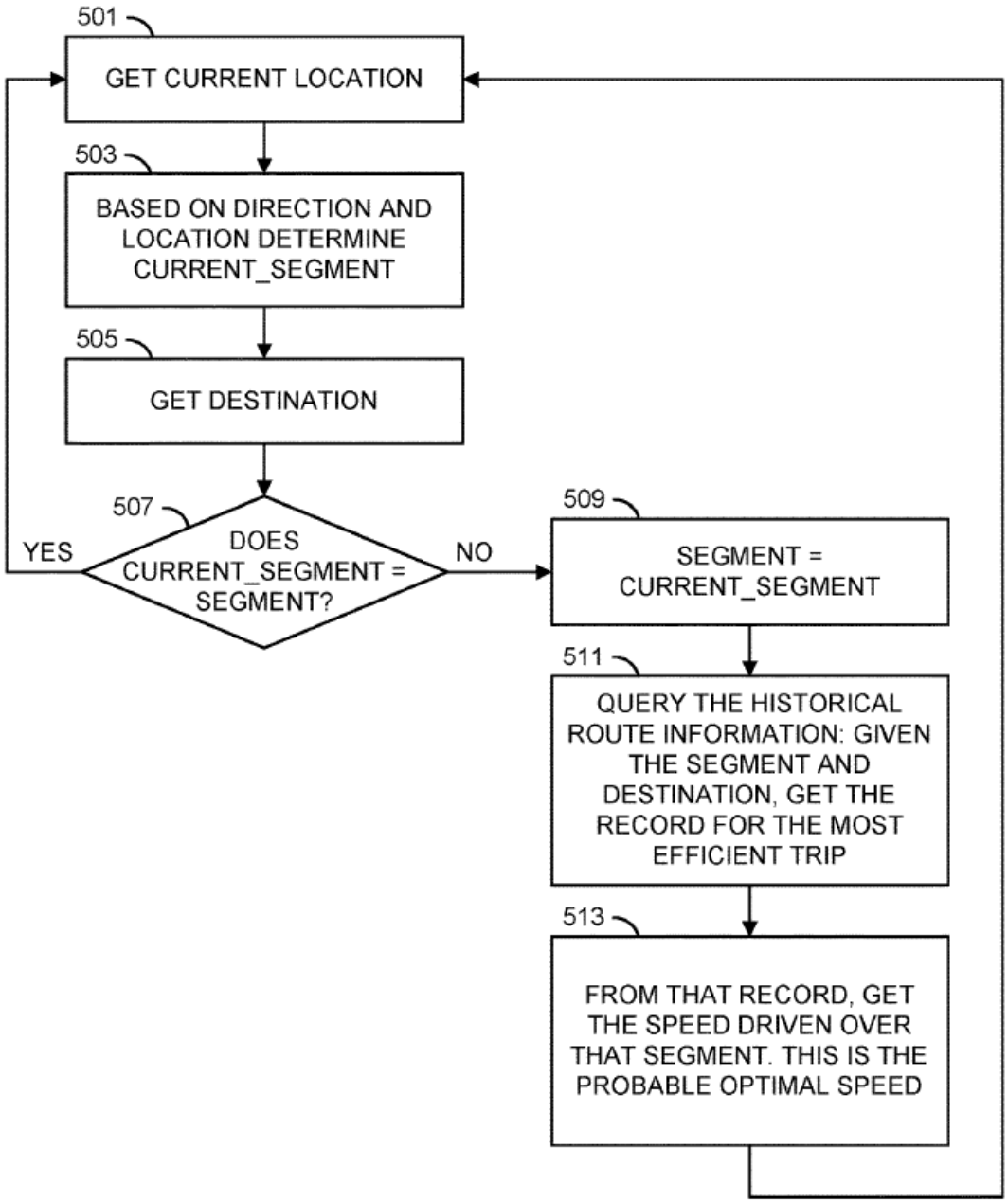

FIG. 5

TESLA-1001, FIG. 5

As shown above, the "probable optimal speed" is determined "as the **current segment** changes (e.g., as the vehicle moves)." TESLA-1001, 18:57-67 (emphasis

added). This involves "using historical data to determine a Probable Optimal Speed." *Id.*, 18:25-56. Once the vehicle has "entered a new segment," "[a] database is examined to find the historical information about **this segment**." *Id.* (emphasis added). This "new segment" is a current segment because it includes a current position of the vehicle once the vehicle has entered it. The Figure 5 method is an active process that involves real-time vehicle location, and thus, a "new" segment includes the vehicle's current position as soon as the vehicle has entered it, making it the current segment at that time. *Id.* ("the vehicle is in the same segment as previously determined or if it has entered a new segment since reevaluating the vehicle location."). The Figure 5 description further supports this because the system only queries the database after the vehicle has entered the "new segment." *Id.*, FIG. 5 (step 509).

33. Based on my review of the specification, the term "segment" is also used in a manner that is consistent with the plain meaning of ***segment*** discussed above. The specification describes various types of power optimization techniques that fall within claim scope. A POSITA would have therefore recognized that the ***segment*** may be represented by either a "current route segment" and "upcoming route segments" (or "next segments"). *See, e.g.*, TESLA-1001, 3:55-4:15.

34. The specification describes examples where "applied power" is "calculated continuously[,]" power calculation occurs "at each point (e.g., every

segment, or points within a segment) as the vehicle is driven." TESLA-1001, 5:49-55. In these examples, because "the most energy efficient speed at which to drive may be continuously calculated," power application through use of calculated energy efficient speeds occurs for "**current and upcoming route segments**." *Id.*, 5:43-50 (emphasis added); *see also* TESLA-1005, [0009]. These examples are covered by the claims because there is no requirement in claim as to how or when electric power is calculated. I understand that this is consistent with the Panel's analysis in the Institution Decision. *See* Dec., 16.

35. Additionally, the Figure 6 description supports the plain meaning understanding because it demonstrates that the ***segment*** is not limited to future segments. As discussed above, the specification describes how an "efficient speed" is calculated and used to apply calculated electric power to the vehicle to travel along a segment. A POSITA would have recognized that the Figure 6 description teaches that the calculated electric power applied to the vehicle is to enable the vehicle to travel in an energy efficient way (i.e., at the calculated "efficient speed") over the current segment. This is because the process of calculating the "efficient speed," according to the Figure 6 description, relies on a "probable optimal speed" that may be determined via the FIG. 5 technique. In this instance, the application of calculated electric power is provided only for the current segment on which the vehicle is traveling, rather than for a future segment.

ii. Dr. Hoff's Interpretation

36. The Hoff Declaration states that "the claims require prospective speed/power calculations" and that "calculations must be performed for upcoming, not yet reached route segments to allow the vehicle to subsequently travel over those segments at the calculated speed using the calculated power." EX-2007. ¶178; *see id.*, ¶¶78, 199, 202. I disagree for the reasons discussed below.

37. Dr. Hoff's statement that "the claims require prospective speed/power calculations" is not supported by the actual claim language. The language recited in the relevant limitations (limitations [1.a], [11.c.1], [11.c.2]) do not specify how or when "electric power" is applied, as noted by the Panel in its Institution Decision. *See* Inst. Dec., 16. I also agree with the Panel's observation "[t]he recited applying calculated electric power to a vehicle to travel along the segment at a calculated speed **at least implies that the vehicle is currently traveling along the segment**." *Id.* (emphasis added). This is the natural and logical reading of the claim language because the applied ***electric power*** enables vehicle travel ***along the segment***. As explained above, this reading is also supported by the specification, which explains that "[t]he applied power may be calculated continuously[,]" e.g., "at each point (e.g., every segment, or points within a segment) as the vehicle is driven." TESLA-1001, 5:31-55. The specification also describes power

optimization techniques specifically involving use of current segments. *See id.*, 5:38-55, 14:5-39, 18:33-36, 20:19-25.

38. I also disagree with the statement in the Hoff Declaration that "[i]t is impossible to 'apply[] calculated electric power to the vehicle to travel along the segment of the vehicle route at a calculated speed' if the vehicle is already traveling over, or has completed traveling over, that route segment." Ex-2007, ¶177. This statement assumes a specific length for a segment when the '399 patent specification makes clear that "[a] segment may comprise **<u>any distance to be traveled</u>**, including the entire route, or small portions of the route[,]" and further, that "[d]ifferent segments in the same route may be of different lengths." TESLA-1001, 14:6-16 (emphasis added).

39. A POSITA would have understood from the description in column 14, lines 6-16 that the ***segment*** recited in claims 1 and 11 may have different lengths depending on implementation demands. In some implementations, the length of a "segment" may be sized such that a first time period required for a vehicle to complete travel along the length of the "segment" is longer than a second time period required for the calculation and/or application of 'electric power. The length of a segment influences travel time based on the vehicle's speed. Since power calculation and application involve processing inputs and adjusting the power output, which can occur in a short computational timeframe, a sufficiently long

segment ensures that these operations can be completed before the vehicle reaches the segment's end. By choosing an appropriately long segment, the time needed for power calculation and application can still remain shorter than the total time the vehicle takes to traverse the segment, ensuring real-time or near-real-time adjustments.

b. ***Vehicle Route*** ([1.a], [11.c.1])

i. Requirements Under Plain Meaning

40. Claims 1 and 11 describe a ***vehicle route*** from which a ***segment*** is determined. In the phrase "vehicle route," the word "vehicle" is used as an adjective to modify the noun "route." As discussed in paragraph 29, the plain meaning of "route" is "a traveled way." TESLA-1055, 4. This indicates that the ***vehicle route*** references a route, i.e., "a traveled way," for a vehicle.

41. The plain meaning of "route" is not limited by a final destination point. This is because a final destination point is not a defining attribute of "route." A POSITA would have also recognized that the ***vehicle route*** described in claims 1 and 11 does not require knowledge of a destination point. The relevant limitations ([1.a], [11.c.1]) do not include any reference to a destination of a vehicle or recite a step of identifying a destination. These features are described in other dependent claims. *See* TESLA-1001, Cls. 3-5, 13-15. For example, claim 4 recites "[t]he method of claim 1, further comprising the step of selecting a destination using

statistical destination logic." Claim 4 references "destination" using the identifier "a," which I understand means that the "destination" referenced in claim 4 is newly recited in this claim and not referenced in the base independent claim (i.e., claim 1). Additionally, the use of "further comprising" in claims 3-5 suggests that the selection of a "destination" is newly recited in these claims and not part of the base independent claim (i.e., claim 1).

42. Similarly, claim 14 recites "[t]he apparatus of claim 11, wherein vehicle route is set based on a destination determined at least in part using statistical destination logic." In claim 14, while there is a reference to "vehicle route," the "destination is introduced using the identifier "a," which I understand means that the "destination" referenced in claim 14 is newly recited in this claim and not referenced in the base independent claim (i.e., claim 11).

43. Based on my review of the specification, I find that there is no specific definition of the term "route" within the of the '399 patent specification. This is because there are various examples of "routes" representing traveled ways by a vehicle with different attributes. *See, e.g.*, TESLA-1001, 2:64-3:19, 11:44-12:15, 14:25-37. In some examples, "[t]he route is determined based on the current position of the vehicle and a final destination position." TESLA-1001, 11:64-12:15. In other examples, the specification describes that "[a] power management logic may determine energy efficiency over the course of a trip" without a final

destination since "[t]he destination of the driver **does not have to be known** (e.g., input into a GPS or other similar system by the driver)." *Id.*, 2:64-3:19 (emphasis added).

44. Additionally, "[t]he route may be continuously re-segmented," e.g., "as the vehicle moves" and as "the power management device may become aware of changing road conditions (e.g., traffic, weather, etc.)." *Id.*, 14:25-37. Routes can also be dynamically adjusted based on real-time conditions and is composed of one or more segments that may be defined by various factors (e.g., speed changes, traffic, terrain, distance). *See id.*, 11:44-62 ("…the route is segmented into one or more segments…").

45. A POSITA would have understood that the ***vehicle route*** does not require a final destination point. As noted above, the specification references a "route" as a path that a vehicle follows, which can include one or more segments and may be determined without requiring a final destination. In some examples, the "the route may be revised (e.g., continuously revised) during operation[,]" (TESLA-1001, 5:31-55). Additionally, intermediate destinations or inferred paths may similarly describe a route based on driving history, indicating that a route can exist without requiring a final destination. *See* TESLA-1001, 12:31-47.

ii. Dr. Hoff's Interpretation

46. The Hoff Declaration states that "the '399 patent further clarifies that vehicle's 'route' is the path the vehicle will travel which is 'determined based on the current position of the vehicle and a final destination position.'" Ex-2007, ¶92. I disagree with this statement because it interprets ***vehicle route*** to be defined by a "final destination position." As I noted above, the relevant limitations of claims 1 and 11 ([1.a], [11.c.1]) do not include to language relating to a destination.

47. A definition of ***vehicle route*** as being defined by a final destination point is also incorrect for two reasons. First, it is not consistent with the language recited in the claims. As noted above, in [1.a], "determining" is used as a verb to modify the noun "segment," which means that the required determination is of the ***segment***—not the ***vehicle route***. There is no clear statement in the specification as to what is represented by a "final destination position." The specification also does not describe that a "final destination position" is a fixed or necessary component of a route because it describes how routes can be determined, revised, and segmented dynamically without requiring an ultimate endpoint. For example, the specification describes real-world scenarios indicating that a destination may constantly change, suggesting a final destination position is not a defining attribute of a vehicle route. *See, e.g.*, TESLA-1001, 12:48-59 ("Thus, as the vehicle drives around, the

probable destination determined by the statistical destination logic **<u>may constantly change</u>** to revise the destination or intermediate destination") (emphasis added).

c. <u>Application of ***Electric Power*** ([1.c.], [11.c.1], [11.c.2])</u>

i. Requirements Under Plain Meaning

48. Claims 1 and 11 describe the application of ***electric power to the vehicle to travel along the segment of the vehicle rotate at [a]/[the] calculated speed***. In reading this language, I note that the operation recited in [1.c] is ***applying*** of an ***electric power***. While the adjective "calculated" modifies the nouns "electric power" and "speed" recited in [1.c], satisfaction of this limitation does specifically require a real-time calculation of ***electric power*** or ***speed***. This is consistent with the Panel's finding that "claim 1 does not specify **<u>how</u>** or **<u>when</u>** electric power and speed are **<u>calculated</u>**." Dec., 16 (emphasis added). Similarly, without claim language directed to such calculation, the ***applying*** operation is also not limited to specific examples of "electric power" applied to a vehicle that are described in the specification. Based on my review of the specification, some examples of different "electric power" described in the specification includes (1) battery-stored electric power, regenerative power, and internal combustion engine-derived power (*see, e.g.*, TESLA-1001, 4:64-5:3), (2) calculated electric power to optimize energy efficiency (*see, e.g.*, *id.*, 14:47-56), and (3) segment-specific electric power adjustments for real-time optimization (*see, e.g.*, *id.*, 18:4-24).

49. Additionally, the limitation of claim 11 that corresponds to [1.c] ([11.c.1]) describes a ***power management system*** that is set to ***calculate[] [sic]*** the ***electric power*** and ***speed***, there is no language within [11.c.1] limiting the configuration to specific types of calculations. Limitation [11.c.2] describes the ***power management system*** is set to act to ***apply calculated electric power to the vehicle to travel along the segment of the vehicle route at the calculated speed***. Like the operation described in [1.c], the ***apply*** operation in [11.c.2] is not limited to a specific type of ***calculated electric power*** or ***calculated speed***. As such, each of [1.c], [11.c.1], and [11.c.2] may be interpreted to encompass the examples of "electric power" applied to a vehicle that are described in the specification.

50. Based on my review of the specification, the plain meaning understanding discussed above is supported by examples of power optimization techniques described in the '399 patent. This is because the specification describes techniques where a probable optimal speed is determined based on historical information stored in a database. As previously noted, the Figure 5 technique is directed to "a method of using **historical data** to determine a Probable Optimal Speed" where such a speed "most likely approximates the optimal speed, based on previous trips." *See* TESLA-1001, 18:25-56 (emphasis added). In this example, a database is queried to identify "a speed that is most likely the best (e.g., most efficient) speed to travel for the current trip," e.g., "how fast the vehicle was

traveling during the trip in which the vehicle used the least amount of energy over the same route." *Id.*

51. In describing the Figure 5 technique, the specification notes that this technique involves "look[ing] at all of the previous data to determine the **power that would be utilized to drive each segment** at a particular speed." *Id.*, 18:4-24. Based on the reference to "power" determination in this description, a POSITA would have understood that the Figure 5 technique involves determining a power required to maintain a vehicle at a "particular speed" (e.g., at the historical speed for that segment), which involves applying the required power (i.e., applying electric power) on a segment-by-segment basis and as the vehicle is traveling through a current segment.

52. The understanding of the Figure 5 technique discussed above is supported by the specification's additional description of the following real-world example:

> For example, in the past, a driver may have driven a **particular segment** 1000 times. Out of those thousand times, she may have driven it at speeds ranging from 80 kph to 120 kph. For each of those 1000 times that she drove the segment, the car recorded how fast she drove it, and how much energy was usede. Therefore, to estimate how much energy would be required to drive the segment at 95 kph, the **power may be estimated by taking an**

> **average of all of the previous times the driver drove that segment at 95 kph to arrive at an estimated energy usage**, rather than calculating the power from the physics calculations, as described above.

TESLA-1001, 18:4-24 (emphasis added). This description involves a power estimation using historical information regarding speed information. A POSITA would have understood that this description confirms that a "probable optimal speed" determined using the Figure 5 technique can be used to perform a calculation and application of "electric power." Specifically, the calculation involves the steps of (a) determining an average speed for a set of speeds previously traveled by a vehicle while driving along a particular segment, (b) estimating energy usage associated with the average speed, and (c) determining a required power associated with the estimated energy usage. Further, because the technique discussed above is performed in relation to a "particular segment," it confirms that the calculated electric power is applied for each segment (i.e., on a segment-by-segment basis) as the vehicle is traveling over a current segment.

53. Figure 6 also supports the understanding of the Figure 5 technique as involving power calculation and application on a segment basis while the vehicle is traveling along a current segment.

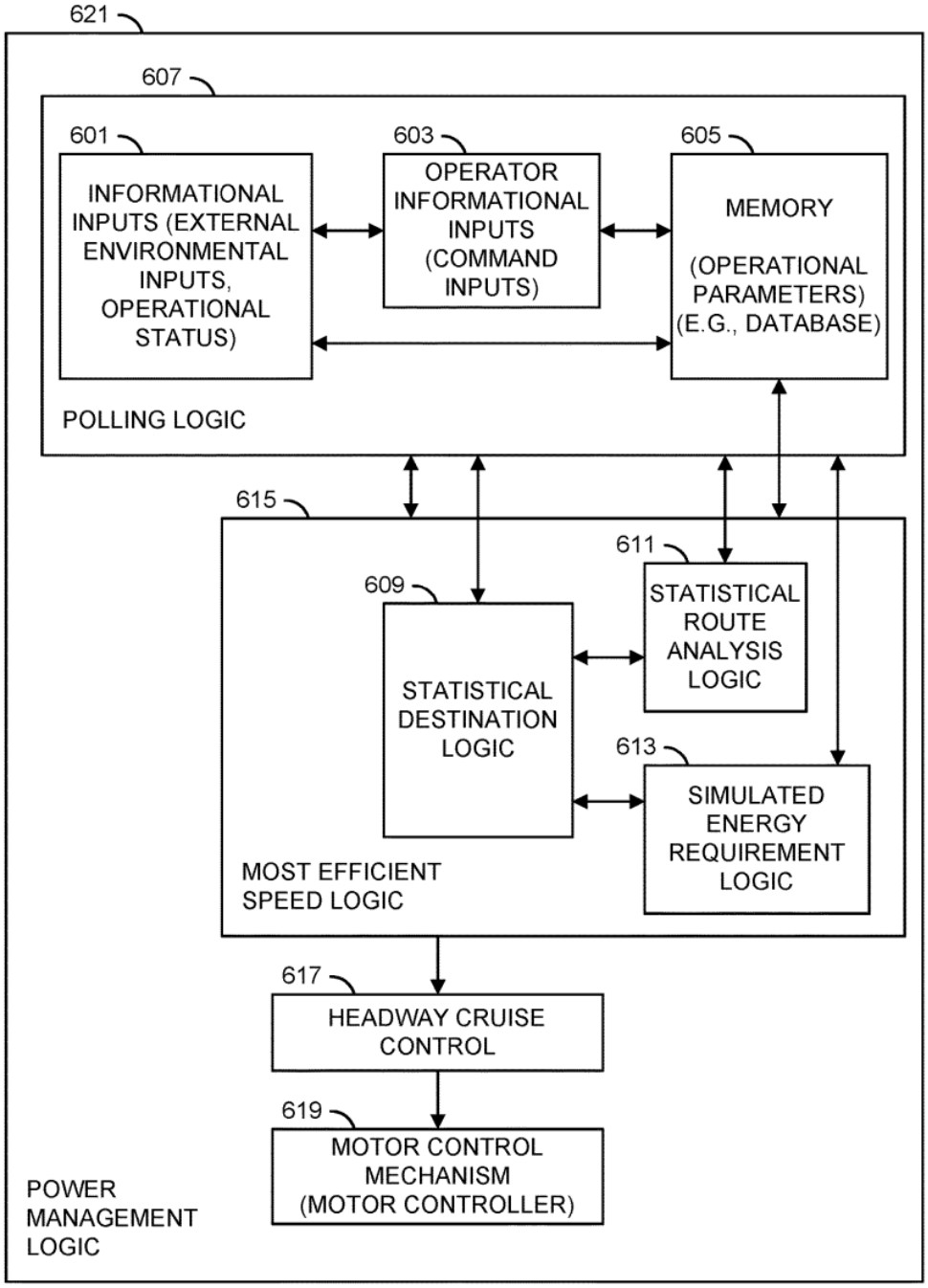

FIG. 6

TESLA-1001, FIG. 6

As shown above, the system depicted in Figure 6 includes logic components (e.g., 609, 611, 613, 615) that collectively function to combine an "optimized speed" and

"probable optimal speed" to determine the "efficient speed." TESLA-1001, 21:1-10. In the context of the Figure 5 technique discussed above, the "probable optimal speed" is represented by historical speed information, which is then weighted alongside an "optimized speed" to determine the "efficient speed." *Id.*, 21:11-42 ("…the derived efficient speed logic 615 may produce an efficient speed output for each part of the route (e.g., the **speeds or applied powers** resulting from optimizing the fuel efficiency over the route or parts of the route)").

54. As discussed above, Figures 5 and 6 would have led a POSITA to recognize that the specification teaches an example of a power efficiency technique in which historical speed information is used to identify a "probable optimal speed" (e.g., average speed), which is then used (in conjunction with an "optimized speed") to determine a required power associated with energy usage. This required power is calculated and applied on a per-segment basis such that the calculation and application occur as the vehicle is traveling on a particular segment that includes its current position (i.e., current segment).

ii. Dr. Hoff's Interpretation

55. The Hoff Declaration states that "the claims require prospective speed/power calculations" because "calculations **must be** performed for upcoming, and not yet reached route segments to allow the vehicle to subsequently travel over those segments at the calculated speed using the calculated power." Ex-2007, ¶178.

I disagree with statement because, as explained in paragraph 49 above, there is no language within the relevant limitations of claims 1 and 11 ([1.c], [11.c.1], [11.c.2]) that restrict the type of calculation or application of ***electric power***. There is also no language regarding the timing of when such calculation or application are required to occur within these limitations.

56. Additionally, as explained in paragraphs 18-26 above, Dr. Hoff's interpretation of the claims is undercut by at least the descriptions of Figures 5 and 6 in the specification. As discussed above, Figures 5 and 6 would have led a POSITA to recognize that the specification teaches an example of a power efficiency technique in which historical speed information is used to identify a "probable optimal speed" (e.g., average speed), which is then used (in conjunction with an "optimized speed") to determine a required power associated with energy usage. This required power is calculated and applied on a per-segment basis such that the calculation and application occur as the vehicle is traveling on a particular segment that includes its current position (i.e., current segment). Thus, in this example, a ***segment*** that is determined is a current segment (i.e., as the vehicle's current position indicates the vehicle has entered a new segment). Additionally, the application of ***electric power*** is the required power associated with energy usage associated with the average speed as the vehicle travels along the current segment.

See TESLA-1001, 18:4-67 (Figure 5 description); *see also* 21:1-55 (Figure 6 description).

57. As explained above, the description of the Figure 5 technique supports the understanding discussed above. The specification describes the Figure 5 technique as "a continuous process, in which the power management device can determine a probable optimal speed **as the current segment changes**…" TESLA-1001, 18:64–67 (emphasis added). This description suggests a probable optimal speed may be determined during the same time frame as a vehicle traveling through a newly-entered segment.

58. The Hoff Declaration also states that "[i]t is impossible to 'apply[] calculated electric power to the vehicle to travel along the segment of the vehicle route at a calculated speed' if the vehicle is already traveling over, or has completed traveling over, that route segment." Ex-2007, ¶178. I disagree with this statement because it does not consider implementation details regarding ***segment[s]*** having different lengths. The statement also conflates the timing associated with a vehicle travel along a segment and timing associated with calculating ***electric power***. Neither of these attributes are described, suggested, or implied in the claim language. *See* ¶¶48-49.

59. Additionally, based on the descriptions of Figures 5 and 6 discussed above (*see* ¶¶18-26), a POSITA would have understood that the specification

describes an example of calculating and applying "electric power" as a vehicle is traveling along a current segment. Beyond this description, a POSITA would have used common sense to understand that the recited ***segments*** may have different lengths depending on implementation demands. In some implementations, the length of a ***segment*** may be sized such that a first time period required for a vehicle to complete travel along the length of the ***segment*** is longer than a second time period required for the calculation and/or application of ***electric power***.

60. Additionally, the plain meaning of "along" is "in a line matching the length **or direction of**." TESLA-1055, 3 (emphasis added). A POSITA would have understood that a can "travel along a particular road segment" by moving on and in the direction of the road segment. This may be accomplished without requiring when the vehicle originally drove onto the road segment from some other road or road segment. Electric power may be applied to a vehicle already traveling over a current segment and nonetheless be applied such that the vehicle ***travel[s] along the segment of the vehicle route at a calculated speed***.

C. Application of the Hongo-Obradovich-Niki Combination to Claim 1

61. I provided an analysis of the combination of Hongo, Obradovich, and Niki in relation to claims 1 and 11 of the '399 patent in the Declaration, and I incorporate that analysis here by reference. *See* TESLA-1003, ¶¶90-130, 151-61.

1. Hongo's Block Number (BKN) Identification Techniques

62. The Hongo-Obradovich-Niki combination satisfies the requirements of [1.a], [11.c.1], and [11.c.2] for the reasons previously discussed in my Declaration. *See* TESLA-1003, ¶¶96-98, 161. I incorporate that analysis here by reference in relation to the further analysis of these limitations below.

63. As explained in Sections VIII.B.1 and VIII.B.2, scope of the ***segment*** described in claims 1 and 11 is not limited to any specific type of "segment" described in the specification. *See* ¶¶29-35. The scope of the ***segment*** encompass either a "current route segment" or "upcoming route segments" (or "next segments"). *See, e.g.*, TESLA-1001, 3:55-4:15. In examples where "applied power" is "calculated continuously[,]" power calculation occurs "at each point (e.g., every segment, or points within a segment) as the vehicle is driven." *Id.*, 5:49-55. In these examples, because "the most energy efficient speed at which to drive may be continuously calculated," power application through use of calculated energy efficient speeds occurs for "**current and upcoming route segments**." *Id.*, 5:43-50 (emphasis added); *see also* TESLA-1005, [0009]. I agree with the Panel's finding that "claim 1 does not specify how or when electric power and speed are calculated." Dec., 16.

64. Like the Figure 5 technique discussed in paragraphs 18-26 above, Hongo describes an adaptive cruise control technique that involves using current

vehicle position (e.g., "current position r") to query a database. TESLA-1005, [0027]. This technique is similar to the specification's description of the Figure 5 technique, where "historical information is queried to determine what speed the vehicle was traveling every time that the vehicle….was in the same segment…" TESLA-1001, 18:25-56.

65. Based on my review of the specification and Hongo, I find that the Figure 5 technique and Hongo's adaptive cruise control techniques each provide examples of the ***segment*** described in claims 1 and 11 because they involve determination of a portion of a traveling vehicle's path based on a current vehicle position (i.e., a current segment). TESLA-1005, [0027]. Hongo's reference to "section" in paragraph [0027] indicates that each BKN is associated with "block range coordinates (r1, r2)" that define a divided section of a road being driven on by a vehicle. *See* TESLA-1003, ¶¶96-98, 119-30. A POSITA would have understood that Hongo's description confirms that a "section" represented by a BKN is an example of the ***segment of a vehicle route*** described in claims 1 and 11. In Hongo, the "section" describes a portion of a road that a vehicle travels on (e.g., ***vehicle route***), and is defined by block range coordinates (r1, r2). Information specified by each section within DB 20 is used to assess specific locations along the vehicle paths, so they serve as "segments of a vehicle route" by tracking the vehicle's movement from one predefined block to the next.

66. Further, even if each "section" represented by a BKN is understood to be static and unchanging, this configuration is similar to examples of "segments described in the specification. In describing route segmentation techniques, specification explains that "[t]he route may be segmented in any appropriate manner." TESLA-1001, 14:17-24. A POSITA would have recognized that the specification does not specifically exclude the possibility of using static segments that remain fixed and do not change as a vehicle is traveling along a route. While the specification describes segments that change, it does not explicitly exclude the possibility of predefined, static segments that remain constant. *See* TESLA-1001, 11:64-12:15.

67. A POSITA would have recognized that it would have been obvious and/or advantageous in certain examples to use predefined, static segments with the power optimization techniques described in the specification. For example, a POSITA would have understood that using predefined, static segments in the Figure 5 technique makes sense because, in this example, historical route data is stored and analyzed to determine a "probable optimal speed" for previously traveled segments. *See* TESLA-1001, 18:4-67. This means that the system can efficiently retrieve relevant data without recalculating segment boundaries in real-time. Since Figure 5 describes how the system queries a database to find historical information about a segment once the vehicle enters it, having fixed segments

allows for a consistent structure in which past driving patterns, energy usage, and efficiency data can be applied to current conditions without requiring continuous segmentation adjustments. Additionally, using static segments ensures that comparisons across multiple historical trips remain valid, enabling the system to determine probable optimal speeds based on prior energy-efficient driving behavior for the same route segments. This understanding is consistent with the specification's teaching that "the number of segments N may be decided based on the tradeoff between computing power and accuracy." TESLA-1001, 14:38-45.

68. The understanding of the Figure 5 technique discussed above is also supported by the specification's description that "the number of segments N may be decided based on the tradeoff between computing power and accuracy." TESLA-1001, 14:38-45. Here, the specification suggests that segments are not inherently fixed or dynamic but can be configured based on system design choices. This implies that in some cases, predefined, static segments may be preferable because they reduce computational complexity, allowing the system to operate efficiently by referencing stored data rather than continuously recalculating segment boundaries. Conversely, a more dynamic segmentation approach may improve accuracy by tailoring segment boundaries to real-time conditions, but at the cost of increased computational demands. Thus, a POSITA would have balanced efficiency and precision in designing an applicable route segmentation

strategy, which further supports the understanding that both static and dynamic segments can be used in different implementations.

2. Hongo's Adaptive Cruise Control

69. The Hongo-Obradovich-Niki combination satisfies the requirements of [1.c], [11.c.1], and [11.c.2] for the reasons previously discussed in my Declaration. *See* TESLA-1003, ¶¶119-30. I incorporate that analysis here by reference in relation to the further analysis of these limitations below.

70. As explained in Section VIII.B.3, the application of ***electric power*** is not limited to specific types of "electric power." As examples, this includes "electric power" that may be calculated during the process recited in claim 1, or calculated prior to the start of that process (e.g., a previously-calculated value stored in a database). This interpretation is supported by the '399 patent specification's description of embodiments in which a value used as the probable optimal speed is historical information stored in a database (i.e., a value calculated prior to the determination of a current segment). *See* TESLA-1001, 18:25-67.

71. Based on my review of the specification and Hongo, I find that Hongo's adaptive cruise control techniques involve application of a power associated with a target vehicle speed as the vehicle is traveling along a current segment. This coincides with the descriptions of Figures 5 and 6 in the specification discussed in paragraphs 18-26. A POSITA would have recognized

that the descriptions of Figures 5 and 6 provide an example of a power efficiency technique in which historical speed information is used to identify a "probable optimal speed" (e.g., average speed), which is then used (in conjunction with an "optimized speed") to determine a required power associated with energy usage. This required power is calculated and applied on a per-segment basis such that the calculation and application occur as the vehicle is traveling on a particular segment that includes its current position (i.e., current segment).

72. As previously discussed, the Hoff Declaration states that "[i]t is impossible to 'apply[] calculated electric power to the vehicle to travel along the segment of the vehicle route at a calculated speed' if the vehicle is already traveling over, or has completed traveling over, that route segment." Ex-2007, ¶178. This statement departs from the plain meaning of [1.c], [11.c.1], and [11.c.2] for the reasons discussed in paragraphs 48-54.

73. The Hoff Declaration also states that Hongo's "'trace mode' is separate from, and not used when, Hongo's cruise control is active." Ex-2007, ¶113; *see id.*, ¶¶117, 119, 121. 139, 153, 154, 214, 215. I disagree with this characterization of Hongo's trace mode, which Dr. Hoff seemingly suggests is separate from functionality provided by Hongo's playback mode.

74. Hongo clarifies that its cruise control system operates in both a 'trace mode' and a 'playback mode'" but does not specifically address aspects of these

modes that my Declaration noted were pertinent to the claim language. Ex-2007, ¶153; *see also id.*, ¶¶139, 215. In my opinion, a POSITA would have understood that the trace mode and playback mode can provide functionality during a single mode of operation in certain circumstances. For example, paragraph [0025] describes of "an implementation scheme **having both** a 'trace mode' and a 'play mode'…." TESLA-1005, [0025]. Additionally, in paragraph [0026], Hongo explains that "even in playback mode, **driving history data may be added or updated depending on the situation**." *Id.*, [0026] (emphasis added). This description confirms that trace mode functionality (recording driving history data) can occur while playback mode is active. Thus, a POSITA would have recognized that both modes can operate simultaneously in some cases.

75. A POSITA would have also understood that Hongo's playback mode provides functionality to retrieve data, as well as update it. This is because Hongo's playback mode typically retrieves stored driving history data to determine a target vehicle speed (V0). However, as indicated in paragraph [0026], the system can still update or add new driving history data while in playback mode, meaning trace mode functions are being used. TESLA-1001, [0026]. This paragraph also explains that components that provide functionality for the playback mode (e.g., road environment considering means 110, driving history search means 130) are "each realized by software running on the above-mentioned computer." *Id.* This

implies that in a software-based system, different functions (modes) do not necessarily operate in isolation because they can execute concurrently when needed. Based on my experience in technological fields relevant to Hongo's teachings, a POSITA familiar with vehicle control systems and database management would recognize that data recording and retrieval are not mutually exclusive functions. Since Hongo explicitly states that data may still be recorded in playback mode, a POSITA would reasonably understand that the system can provide trace mode functionality (data storage) while playback mode is running.

76. Additionally, my Declaration (which address the requirements of [1.c], [11.c.1], and [11.c.2] based on Hongo-Obradovich-Niki) explained that Hongo's playback mode functionality alone is sufficient to satisfy all of the requirements of claims 1 and 11. For [1.a], the Declaration analyzed paragraph [0027] of Hongo and provided the annotated version of Hongo's Figure 2 shown below. *See* TESLA-1003, ¶97.

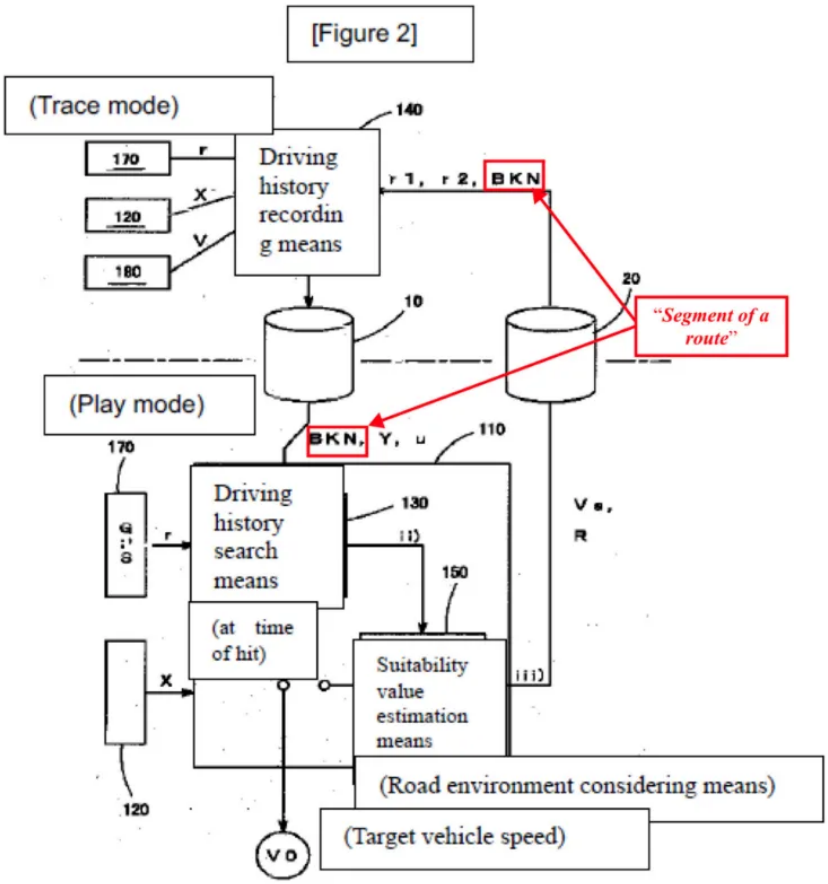

TESLA-1003, ¶97 (annotating TESLA-1005, FIG. 2)

77. As shown above, the identification of BKN ("segment") occurs in each of the "trace" and "playback" modes of the Hongo system. This is consistent with Hongo's description, which teaches that, in the playback mode, the BKN is "specified from the current position coordinate" using "a **method equivalent** to the above-mentioned driving history recording means 140" relating to the trace mode using "the driving history search means 130…" TESLA-1005, [0032] (emphasis added). A POSITA would have recognized that the phrase "a method equivalent to the above-mentioned driving history recording means 140" in paragraph [0032]

suggests that playback mode identifies a BKN using the current position coordinate (r) in a manner similar to how trace mode does in paragraph [0027]. In this paragraph, Hongo describes the trace mode as acquiring the current position (r) from GPS (170) and determining the corresponding BKN by referencing predefined block range coordinates (r1, r2) in DB 20. *Id.*, [0027]. Since paragraph [0032] states that playback mode follows an equivalent method, Hongo's description confirms that playback mode also uses the current position coordinate (r) to determine a BKN, just as in trace mode.

78. For [1.c], the Declaration explained that Hongo's target speed ("***calculated speed***") is calculated as the output of an adaptive cruise control process provided by the "playback" mode in paragraph and provided the annotated version of Hongo's Figure 2 shown below . TESLA-1003, ¶120.

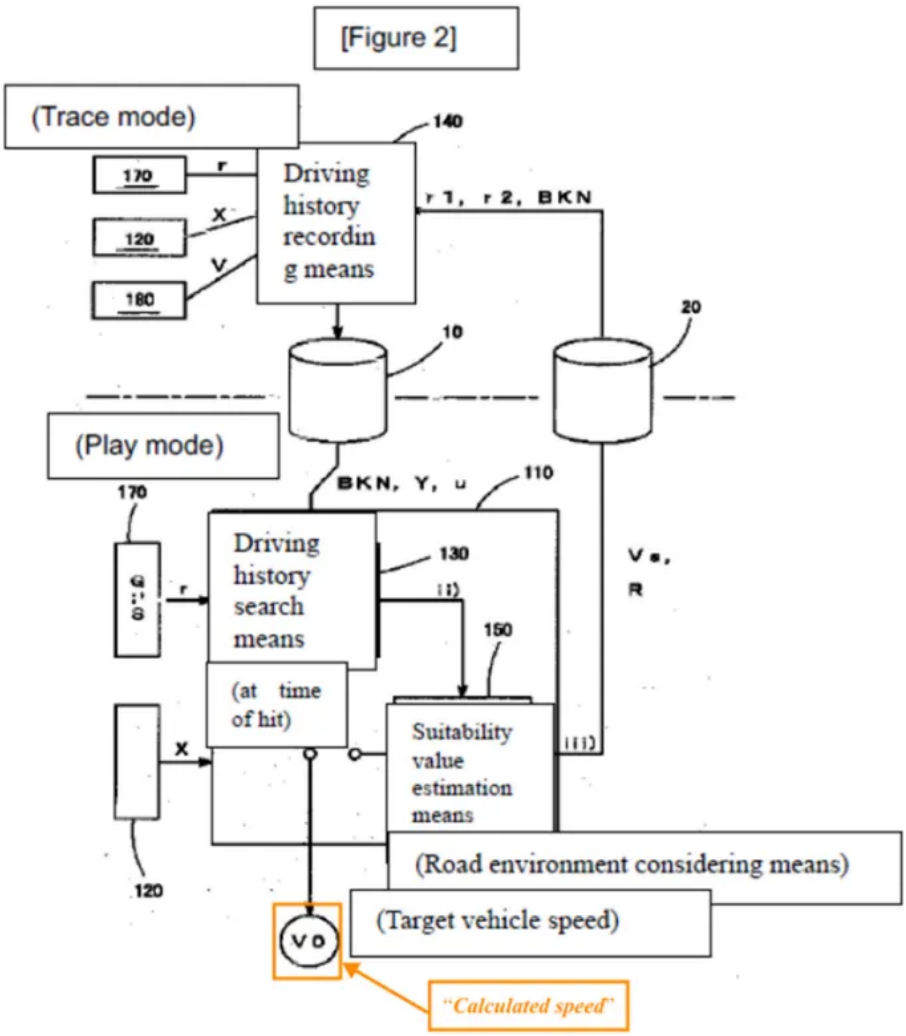

TESLA-1003, ¶120 (annotating TESLA-1005, FIG. 2)

79. As shown above, a target vehicle speed (***calculated speed***) is calculated and output as part of the playback mode. This is consistent with Hongo's description of using "equations/formulas" in calculating the target vehicle speed in the "playback mode." TESLA-1005, [0035], [0036], [0055].

3. Hongo's Target Vehicle Speed

80. The Hongo-Obradovich-Niki combination satisfies the requirements of [1.c], [11.c.1], and [11.c.2] for the reasons previously discussed in my

Declaration. *See* TESLA-1003, ¶¶119-30. I incorporate that analysis here by reference in relation to the further analysis of these limitations below.

81. I note that the Hoff Declaration states that "Hongo involves a straightforward lookup: the vehicle's current position is used to query stored speed data to find out the speed at which the vehicle previously traveled at that location." Ex-2007, ¶210. I agree with this statement and further note that Figure 5 involves a similar lookup process using a vehicle's current position to query a database to identify an efficient speed determined when the vehicle was previously traveling the current segment. TESLA-1001, 18:4-67.

82. The Hoff Declaration also states "Hongo does not perform the two critical steps required by the '399 patent: (1) determining a route segment, and (2) prospectively calculating the power necessary for the vehicle to travel at a calculated speed over that route segment." Ex-2007, ¶211. I disagree with this statement because the Hoff Declaration does not apply the plain meaning of the claim language. *See* ¶¶29-35. As previously noted, ***segment*** may include a current segment or a future segment, and as such, Hongo's identification of BKNs using a current vehicle position is similar to Figure 5's identification of a current segment using the current vehicle position. Similarly, as explained in paragraphs 48-54, the calculation/application of ***electric power*** in claims 1 and 11 are not limited to "prospective" calculations or applications. This is confirmed by the Figure 6

description that the "efficient speed" is determined based on a weighted combination of "probable optimal speed" and "optimized speed." As explained in paragraphs 53 and 54, where the "probable optimal speed" is determined using the Figure 5 technique, a power is calculated and applied as a vehicle travels along each segment.

D. Application of the Hongo-Obradovich-Niki Combination to Claim 6

83. I provided an analysis of the combination of Hongo, Obradovich, and Niki in relation to claim 6 of the '399 patent in the Declaration, and I incorporate that analysis here by reference. *See* TESLA-1003, ¶¶136-42.

84. Claim 6 includes a clause describing that ***vehicle route segment determination further comprises determining multiple route segments*** ([6.1]) and ***each route segment having a separate calculated speed and selected*** ([6.2]). Under plain meaning, [6.1] limits the operation recited [1.a] by specifying that the ***determining*** operation includes ***determining multiple route segments***. I note that neither [1.a] and [6.1] have language regarding timing. As such, the ***determining*** operation recited in [6.1] may be satisfied without requiring when each of the ***multiple route segments*** are determined.

85. The plain meaning understanding discussed above represents an example of a known configuration of a vehicle system around the Critical Date.

Based on my review of the specification and experience in the relevant technological fields, a POSITA would have known that a vehicle system may be implemented to determine segments sequentially in time as the vehicle travels along a route that includes multiple segments. In this configuration, multiple segments are identified over a period of time associated with vehicle travel.

86. The plain meaning understanding discussed above is also consistent with the specification's description of examples of "routes" that are "partially segmented," and "continuously re-segmented" as the vehicle moves…" TESLA-1001, 14:25-37. A POSITA would have recognized that continuous re-segmenting of a route "periodically" would have led to determining multiple segments over a period of time as opposed to a determination at a single time point. This means that new segments are determined at different time intervals rather than all segments being established at once**.** Since the specification describes iterative updates to route segmentation based on changing conditions, the POSITA would have understood that this process results in the determination of multiple segments over time rather than a one-time static segmentation**.**

87. The Hoff Declaration states that claim 6 "plainly requires that multiple route segments must be identified simultaneously as part of the same segment determination step…" Ex-2007, ¶232. I disagree with this statement because it is not consistent with the plain meaning understanding above. As

explained in paragraph 84, the claim language in [1.a], [6.1], or [6.2] does not specify any timing restrictions (e.g., a single time point, or the "same time") in ***determining multiple route segments***.

88. In paragraph [0032], Hongo explains that "[i]n the playback mode, the block number BKN and the road environment parameter Y are specified from the current position coordinate r," and that "the driving history DB 10 is searched for driving history data 11 with matching keys (BKN, Y)." TESLA-1005, [0032]. Based on my review of Hongo, I find that its description makes clear that when, as in paragraph [0036], "[i]f block number BKN misses," this means that a BKN (identified based on the current position coordinate r) is not found in driving history data 11 stored in driving history DB 10. This suggests that an ascertained BKN is not identified within driving history DB 10. Hongo also states "instead of using BKN, it is also possible to search directly using r (coordinates) as a key." TESLA-1005, [0032].

89. Hongo also describes that the method employed to determine a target speed is one in which "the driving history DB 10 is searched for driving history data 11 with matching keys (BKN, Y)." TESLA-1005, [0032]. A POSITA would have understood that while the specific manner in which determining the target speed value may be different amongst the techniques described in paragraphs [0033]-[0039], they each are directed to mutually-exclusive circumstances. This

suggests to the POSITA that techniques described in paragraphs [0032]-[0039] may be part of the same overall system.

E. Application of the Hongo-Obradoivch-Niki-Newstrom Combination to Claim 8

90. I provided an analysis of the combination of Hongo, Obradovich, Niki, and Newstrom in relation to claim 8 of the '399 patent in the Declaration, and I incorporate that analysis here by reference. *See* TESLA-1003, ¶¶196, 197.

91. As explained paragraph 197 of the Declaration, the Hongo-Obradovich-Niki-Newstrom combination makes obvious the operation of ***communicating with a remote database*** within claim 8 because, in Newstrom, "database 20 can be loaded by database manager 22 into 'solid state memory' located in a vehicle through a 'wireless connection to server,' and thus, the geospatial database 20 may be hosted on a server." TESLA-1003, ¶197 (citing TESLA-1012, 8:26-38.

92. Claim 8 includes a clause describing that ***the step of determining information about operational status of a vehicle further comprises the step of communicating with a remote database***. This clause limits a ***determining*** operation recited in [1.b.2] (determining ***information about operational status of a vehicle***) by including ***the step of communicating with a remote database***. Under plain meaning, the ***determining*** step includes two sub-steps: (1) obtaining

information, and (2) assessing information to identify ***operational status*** of the vehicle. Claim 8 does not include any language limiting which of these two sub-steps are limited to include ***communicating with a remote database***.

93. Based on my review of the language described by claims 1 and 8, there is also no temporal requirement (in either claim 1 or claim 8) regarding when each of the sub-steps discussed in paragraph 92 are performed. The claim language does not include any element requiring that information used for assessment in determining an ***operational status*** is obtained during vehicle operation. As such, one interpretation in the ***communicating*** operation may be that it limits the first sub-step such that the information obtained for assessment for a ***operational status*** is information obtained from a ***remote database***.

94. The plain meaning understanding discussed above is supported by the specification. A POSITA would have recognized that various examples of "operational status" that are determined based on assessment of operational status information are described in the specification. *See, e.g.*, TESLA-1001, 4:16-33, 8:53-61. The specification also describes that even the "operational status" may be "derived (e.g., based on other information, including other operational status information)." *Id.*, 4:16-33.

95. The Hoff Declaration states that "claim 8 specifically requires 'communicating with a remote database' **when** '***determining information about***

the operational status of a vehicle." Ex-2007, ¶257 (emphasis for "when" added). As discussed above in paragraph 93, there is no language in claim 8 regarding timing associated with performing the step of ***communicating with a remote database***.

96. Based on my review of claims 1 and 8, the claim language does not prevent interpreting claim 8 as limiting the first sub-step—i.e., the sub-step of obtaining operational status information further comprises "communicating with a remote database." Under plain meaning, claim 8 may be satisfied by obtaining information used to determine an operational status by obtaining such information from a "remote database" through communication with the "remote database."

97. Additionally, the claim language described in [1.b.2] and claim 8 do not include the verb "using." Claim 8 also does not include any language directed to a type of use of the ***remote database***. The operation recited in claim 8 is ***communicating with***, and the claim provides not further detail as to how and when such communication occurs so long as it be part of a process that involves ***determining information about operational status of the vehicle***, as described in [1.b.2]. A POSITA would have therefore understood that claim 8 lacks any language limiting the nature of communications with a remote database.

98. The Hoff Declaration states that "Newstrom does not…teach the use of a "wireless connection" to a server during vehicle operation." Ex-2007, ¶253. I

disagree. Newstrom describes that information within geospatial database 20 may be changed during vehicle operation, since "the Database Manager can unload unused portions and load new portions as the location of the queries change." TESLA-1012, 8:26-38. As explained in the Declaration, this description would have led to a POSITA to understand that "the vehicle can use a wireless connection to the server as the vehicle is being driven." TESLA-1003, ¶197.

99. A POSITA would have recognized that the configuration discussed in paragraph 197 of the Declaration would have naturally flowed from Newstrom's disclosure. This is because the system's ability to dynamically load and unload portions of the geospatial database 20 implies that it could interact with an external server to fetch new tiles or updated geospatial data as needed. Although Newstrom describes query processing as occurring locally a vehicle, its system architecture does not preclude communication with an external server for additional data or updates. This configuration would have also provided an obvious solution to improve accuracy of the information specified in the geospatial database 20, addressing the challenge that "information previously retrieved from geospatial database 20 is no longer valid[]" during vehicle operation. *See* TESLA-1012, 8:15-25.