US 20070280298A1

(19) United States

(12) Patent Application Publication

Hearn et al.

(10) Pub. No.: US 2007/0280298 A1

(43) Pub. Date: Dec. 6, 2007

(54) **REDUCING CHANNEL CHANGE DELAYS**

(75) Inventors: **John P. Hearn**, New Providence, NJ (US); **Kim N. Matthews**, Watchung, NJ (US); **Lesley Jen-Yuan Wu**, Parsippany, NJ (US)

Correspondence Address:
WERNER & AXENFELD, LLP
P.O. BOX 1629
WEST CHESTER, PA 19380

(73) Assignee: **Lucent Technologies Inc.**

(21) Appl. No.: **11/516,418**

(22) Filed: **Sep. 6, 2006**

Related U.S. Application Data

(60) Provisional application No. 60/809,921, filed on May 31, 2006.

Publication Classification

(51) **Int. Cl.**
H04J 3/00 (2006.01)

(52) **U.S. Cl.** **370/498**

(57) **ABSTRACT**

Technology which facilitates a reduction in time of the presentation of video content after a viewer changes channels is described. Frames of a video stream associated with a channel are analyzed to identify locations of access points in the video stream prior to relaying the video stream to a presentation device. Information indicating the locations of access points is stored. The video stream is then time shifted on a continuous basis and is transmitted to the presentation device which made the request for as long as the presentation device remains tuned to the channel corresponding to the request. A first available frame on or before an access point of the time shifted video stream is selected based on the stored information, which is used to commence the transmission of the time shifted video to the presentation device, which facilitates a more immediate presentation of video content.

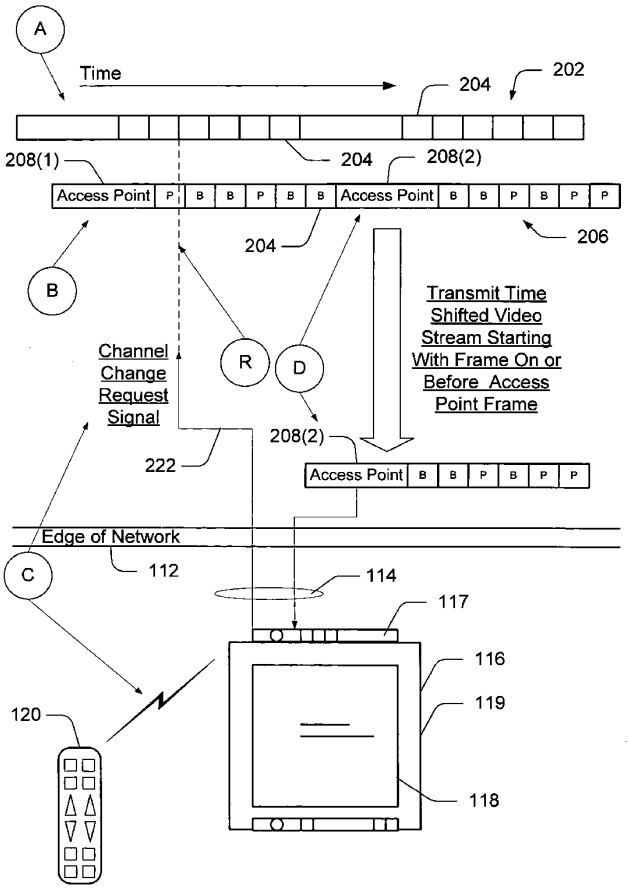

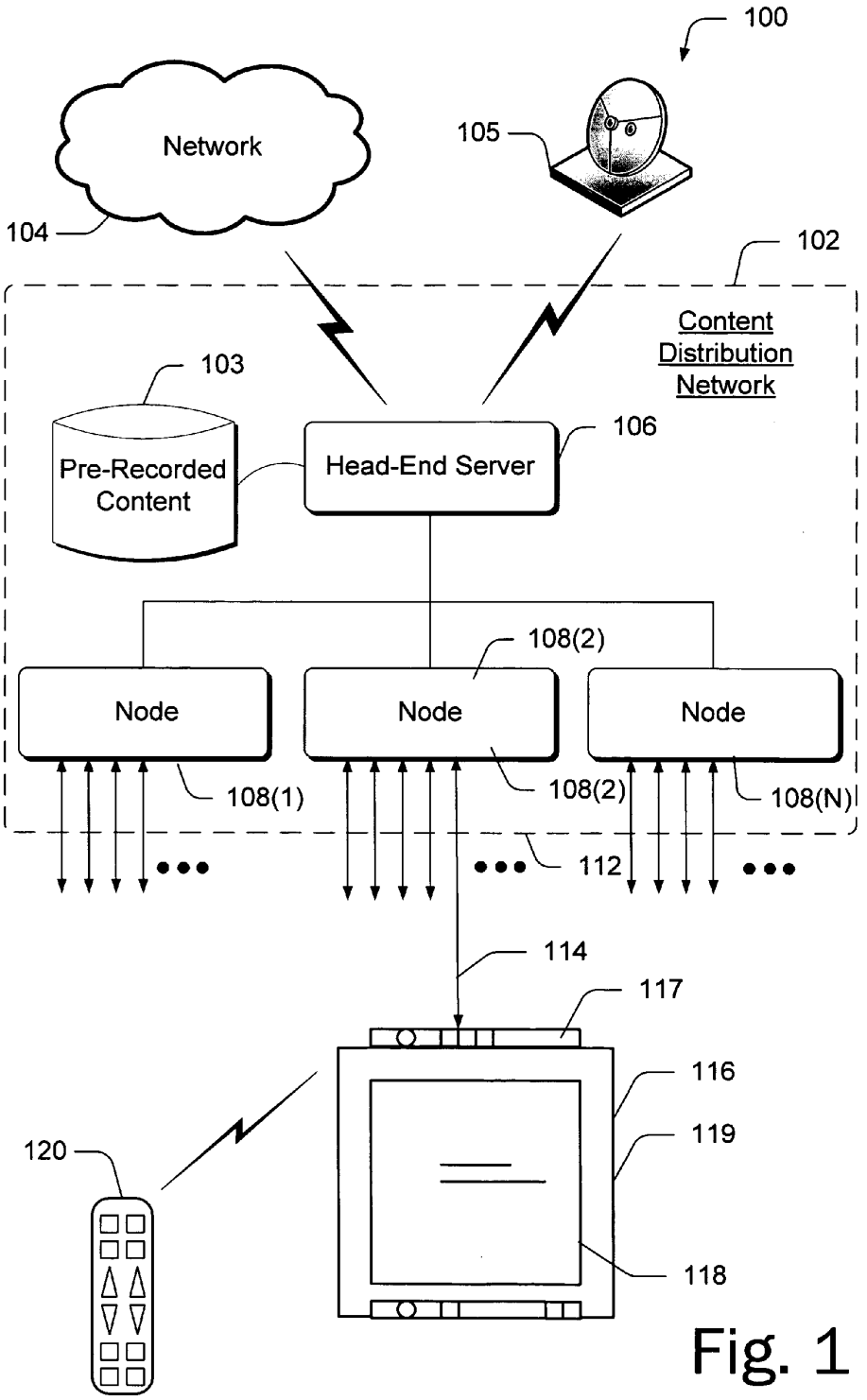
100
Network
105
104
102
Content Distribution Network
103
Pre-Recorded Content
Head-End Server
106
108(2)
Node
Node
Node
108(1)
108(2)
108(N)
112
114
117
116
119
120
118

Fig. 1

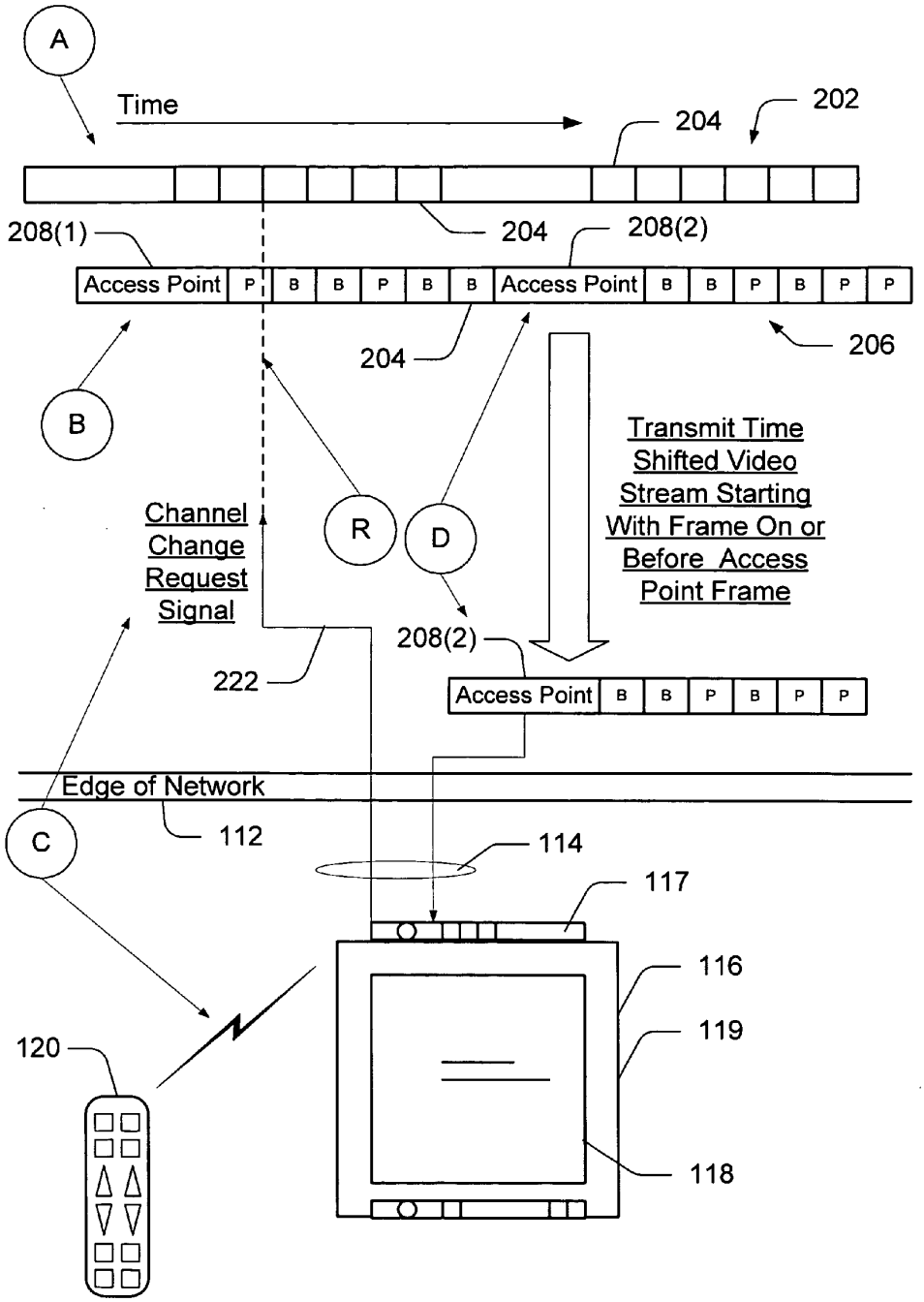
A
Time
202
204
204
208(1)
208(2)
Access Point
P
B
B
P
B
B
Access Point
B
B
P
B
P
P
204
206
B
Transmit Time Shifted Video Stream Starting With Frame On or Before Access Point Frame
Channel Change Request Signal
R
D
208(2)
222
Access Point
B
B
P
B
P
P
Edge of Network
112
C
114
117
116
119
120
118

Fig. 2

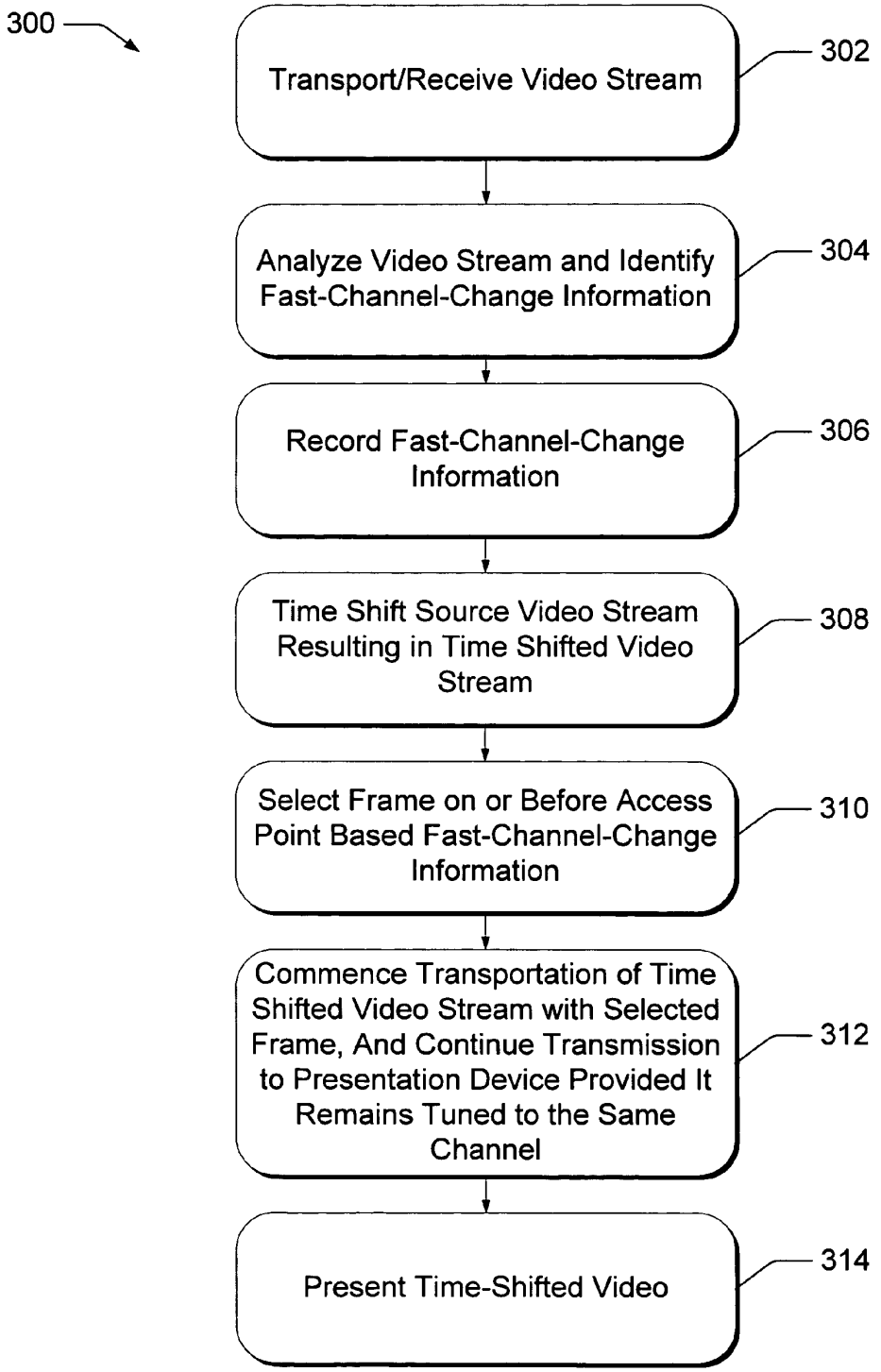
300
Transport/Receive Video Stream
302
Analyze Video Stream and Identify Fast-Channel-Change Information
304
Record Fast-Channel-Change Information
306
Time Shift Source Video Stream Resulting in Time Shifted Video Stream
308
Select Frame on or Before Access Point Based Fast-Channel-Change Information
310
Commence Transportation of Time Shifted Video Stream with Selected Frame, And Continue Transmission to Presentation Device Provided It Remains Tuned to the Same Channel
312
Present Time-Shifted Video
314

Fig. 3

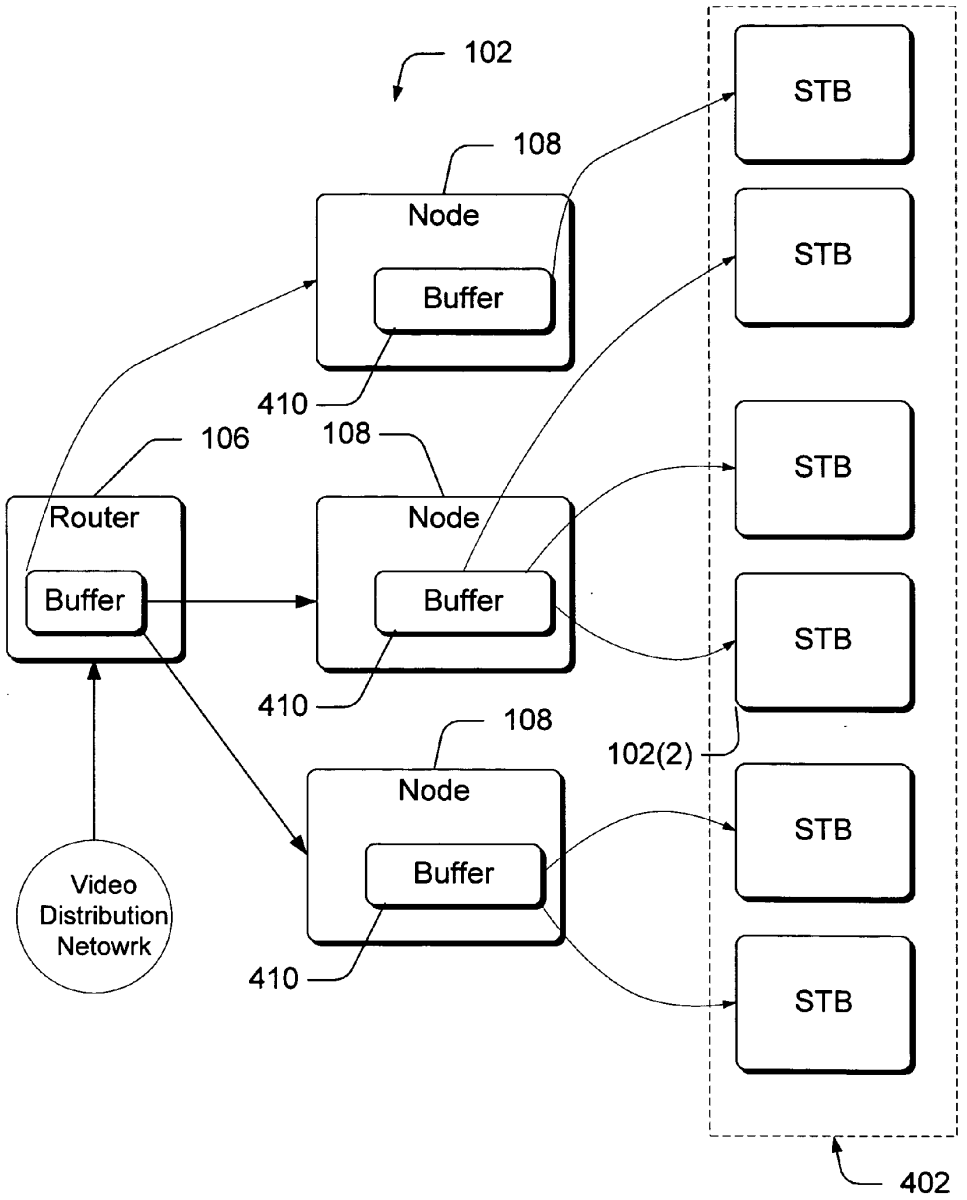
102
108
Node
Buffer
410
106
108
Router
Buffer
Node
Buffer
410
108
Node
Buffer
410
Video
Distribution
Netowrk
STB
STB
STB
STB
102(2)
STB
STB
402

Fig. 4

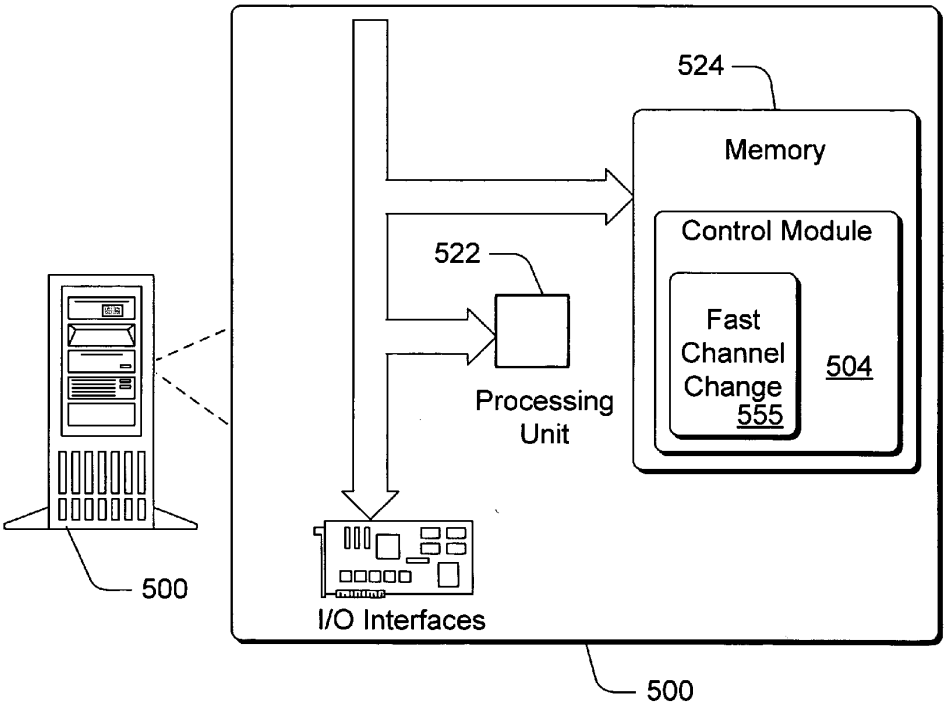
524
Memory
Control Module
Fast
Channel
Change
555
504
522
Processing
Unit
500
I/O Interfaces
500

Fig. 5

REDUCING CHANNEL CHANGE DELAYS

CROSS-REFERENCE TO RELATED APPLICATIONS

[0001] The present patent application claims benefit of U.S. Provisional Application Ser. No. 60/809,921 filed on 31 May 2006.

TECHNICAL FIELD

[0002] This invention relates generally to technology used to reduce the amount of time between when a user selects a new channel on his/her television and when the first picture is displayed.

BACKGROUND

[0003] Broadband providers (e.g., cable, satellite, DSL or fiber-optic-to-home providers) often deliver a real-time broadcast of a digital video multicast data stream (video stream) to subscribers over an internet protocol (IP) network. The video stream may include a real-time broadcast digitally encoded from an analog broadcast feed or program files already encoded in a digital format. When video is streamed, the incoming video stream is buffered at a subscriber's receiving device such as a set-top box or decoder. The buffer is continually emptied of data, decoded, and presented to the subscriber via a presentation device such as a TV. In the mean time, more data is received by the receiving device which refills the buffer, so there is a smooth presentation of data images on the screen of the presentation device.

[0004] Predominantly, the video streams are delivered to subscribers' receiving devices using digital video compression and transmission formats from a standard body known as the Moving Picture Experts Group (MPEG), although there are other types video compression and transmission formats (such as H.264). The video stream configured by the MPEG standard typically includes different types of frames, relationships between frames, and a prescribed order of the different types of frames.

[0005] The video stream is received by the receiving device (e.g., decoder) located at a subscriber's premises, which decodes the frames of the video stream so it can be displayed on the screen of a presentation device. To reduce bandwidth there are only a limited number of a particular types of frames, known as access points, in a video stream which allow decoders to decode a video stream after the decoder initially joins an incoming video stream. Unfortunately, a decoder must wait for these limited numbers of access points to arrive and then be decoded, before the decoder is able to display the first pictures of the video stream on the screen of a presentation device.

[0006] This is problematic for subscribers when they make a channel change request usually via a remote control, because there is a delay period experienced by the subscriber between the time the subscriber makes a channel change request and the subscriber is first presented with the first image of a frame of the video stream associated with the channel requested. During this delay period the screen of a presentation device is usually blank other than programming information. This phenomenon is known as a "channel change delay." This delay has grown from milliseconds to seconds with the current generation of new video delivery technology. Accordingly, channel change delay, which was once unnoticed, has increased to the point that viewers of video broadcasts received over IP distribution systems are unable to channel surf effectively without experiencing annoying delay periods.

[0007] Thus, there is an unsolved need to adequately reduce channel change delays that often occur when subscribers change channels in a video broadcast over IP network environment.

SUMMARY

[0008] Described herein is a technology which facilitates reducing the amount of time between when a user selects a new channel and when the first frames of a picture are actually displayed as images on the screen of a presentation device (such as, but not necessary limited to, a television set). The strategy of the technology is to preprocess a video stream at one or more intermediary nodes in a video over IP network prior to finally transmitting the video stream to the presentation device. Preprocessing of the video stream eliminates delays associated with processing that often occurs when the video stream is received by presentation devices (i.e., equipment located at the end user's premises such as a set-top-box or decoder). More particularly, the preprocessing permits access points to be identified, selected, and delivered to a presentation device for immediate consumption by a decoder, and then almost immediate display on the screen of images associated with the video stream of the channel requested by a user.

[0009] One example of how the preprocessing may be performed is described as follows: frames of a video stream associated with a channel are analyzed to identify locations of access points in the video stream prior to relaying the video stream to a presentation device. Information indicating the locations of access points is stored. The video stream is then time shifted on a continuous basis and is transmitted to the presentation device which made the request for as long as the presentation device remains tuned to the channel corresponding to the request. A first available frame on or before an access point of the time shifted video stream is selected based on the stored information, which is used to commence the transmission of the time shifted video to the presentation device, which facilitates a more immediate presentation (e.g., launching/displaying) of video content images.

[0010] Another feature and advantage of this preprocessing scheme, is that there is no attempt to synchronize and switch between the time shifted video stream and the source video stream. As the link between the presentation device (such as a set top box) and the video over IP network is not shared with other presentation devices of different customer locations, the link is a point-to-point stream. Accordingly, there is no benefit to switch to the original source video stream after transmitting the time shifted video, as doing so, significantly increases bandwidth on the access link between the video over IP network and the customer's premises. Furthermore, non-trivial modifications need to be made to standard set top boxes or decoders used in conjunction with presentation devices to be able to facilitate the operation of switching back to the original source video stream. Accordingly, the present invention is compatible with standard equipment and does not necessarily require modifications to the set top boxes.

[0011] Additional exemplary implementations and features/advantages are described in the Detailed Description in

conjunction with the accompanying drawings below. The scope of the invention is recited in the Claims.

BRIEF DESCRIPTION OF THE DRAWINGS

[0012] The detailed description is explained with reference to the accompanying figures. In the figures, the left-most digit(s) of a reference number identifies the figure in which the reference number first appears.

[0013] FIG. **1** illustrates an exemplary environment within which the present invention can be either fully or partially implemented.

[0014] FIG. **2** is a logical illustration of a technique that may be used to reduce channel change delays.

[0015] FIG. **3** illustrates an exemplary method for reducing channel change delays.

[0016] FIG. **4** illustrates a more detailed view of an environment in which channel change reduction techniques as described may be implemented.

[0017] FIG. **5** illustrates an exemplary physical representation of a computer platform used to implement functionality performed by any intermediary node to reduce channel change delays.

DETAILED DESCRIPTION

Introduction

[0018] This invention is directed to reducing delays in the presentation of video content on a screen of a presentation device, such as a TV, after a channel change request is made by an individual.

[0019] Reference herein to "one embodiment", "an embodiment", or similar formulations herein, means that a particular feature, structure, operation, or characteristic described in connection with the embodiment, is included in at least one embodiment of the present invention. Thus, the appearances of such phrases or formulations herein are not necessarily all referring to the same embodiment. Furthermore, various particular features, structures, operations, or characteristics may be combined in any suitable manner in one or more embodiments.

[0020] In the following description, for purposes of explanation, specific numbers, materials and configurations are set forth in order to provide a thorough understanding of the present invention. However, it will be apparent to one skilled in the art that the present invention may be practiced without each specific example. In other instances, well-known features are omitted or simplified to clarify the description of the exemplary embodiments of the present invention, and thereby, to better explain the present invention.

[0021] The inventors intend these embodiments to serve as representative illustrations and examples. The inventors do not intend these embodiments to limit the scope of the claims; rather, the inventors have contemplated that the claimed invention might also be embodied and implemented in other ways, in conjunction with other present or future technologies.

[0022] This discussion assumes that the reader is familiar with basic operating principles of digital video compression and transmission standard formats, such as the Moving Picture Experts Group (MPEG,) used for coding and decoding audio/video data. Nevertheless, a general introduction to a MPEG technology is provided to better understand the general problem encountered by the inventors and exemplary implementations to solve them.

[0023] Video compression technologies have allowed broadband providers to offer more services based only on moderately upgraded distribution infrastructures. In the case of the new video over IP architectures currently under development, the distribution network and the acceptable business models would not be possible without video compression. However, video compression comes at a cost of equipment, error tolerance and, importantly random access start time. Most high efficiency digital video compression algorithms used today are based on temporal prediction, in which each frame in the sequence of frames is predicted from previously encoded and transmitted frames. Schemes based solely on prediction, however, do not allow for the decoding of video starting at random points in a sequence of video.

[0024] Hence all compression schemes included the occasional transmission of access frames, called "intra-frames" or I-frames. The intra-frame is typically considered to be the fundamental frame type of a digital video signal. Only I-frames can be used to completely reconstruct a video picture without reference to other previously decoded video pictures. I-frames require a large amount of data; therefore, transmitting a large number of them reduces network bandwidth. The frequency of these I-frames is therefore one of the key factors in defining the time a user may wait between requesting a new program his/her remote control, and the first picture being displayed on the TV.

[0025] Again, I-frames come at the cost of compression efficiency, because they are not predicted from previous frames, the quantity of bits required to encode an I-frame can be several times larger than required for other types of predicted frames. Hence manufacturers of high efficiency video compression encoders prefer that the frequency of I-frames is reduced to a minimum. However, other picture coding types, known as P-frames and B-frames, used for spatial and temporal compression reference an I-frame in the stream, and as a consequence, an end-viewer device cannot completely reconstruct a picture without a minimum number of I-frames. For example, MPEG-2 based systems require a minimum I-frame frequency of about 2 Hz. This minimum was set, in part as well, because of the use of integral implementations of MPEG-2's floating-point transforms, which introduce rounding errors in decoders over several frames. Newer codecs, which are being used outside the domain of standard bodies and which use perfectly reversible integer transforms, are increasingly using longer I-frames spacing in order to minimize bandwidth usage.

[0026] There are several other reasons for the delay in seeing the first picture during a channel change. Periodically embedded into the compressed bit stream are several pieces of data that are only required for initial set-up of a decoder before successful decoding can begin and are generally not required thereafter, and hence represent overhead to compression, as this information will only be used by the decoder as it sets up to decode a bit stream. A decoder is first required to extract from an MPEG-2 transport stream a (1) program association table "PAT" packet indicating the PID of a PMT; (2) a program map table "PMT" packet, indicating the PIDs of the video and audio streams, and (3) a video sequence start code indicating the sequence resolution, frame rate, decoding matrices, etc., all prior to beginning to decode the first picture delivered to it.

[0027] Additionally, each distribution system typically has a channel change latency specific to the network, such as

demodulator frequency changes for cable and satellites, and multicast join time for multicast-based video on IP systems. All the aforementioned delays in aggregate can cause a viewer to experience time delays of up to several seconds when changing a channel. This delay is often a source of frustration and annoyance for viewers of video programming attempting to rapidly channel surf, and further may cause friction between subscriber viewers (customers) and video broadcast providers.

[0028] Digital video streams herein are discussed and described with reference to the MPEG standard, however, those skilled the art should readily appreciate that the present invention may be adapted for use in conjunction with other video compression and transmission formats (such as H.264 for instance).

Exemplary Environment

[0029] FIG. **1** illustrates an exemplary environment **100** within which the present invention can be either fully or partially implemented. Environment **100** includes a content distribution network **102**, which is typically a broadband over internet protocol (IP) network. For example, content distribution network **102** may be a cable, satellite, Digital Subscriber Line, fiber-optic-to-home, data, and/or a combination of any of the aforementioned types of content distribution networks. Portions of network **102** may be wired or wireless, and use any suitable topology. Content distribution network **102** may also include or be coupled to other networks **104**, such as the Internet or an intranet.

[0030] Content is typically distributed from a head-end server **106** of network **102**. Content may include any prerecorded content from a storage device **103**, such as television programs, movies, videos, and commercials. Content may also include broadcast content (including live and prerecorded content) received from a broadcast feed **105**. In either event the content is typically encoded and transmitted as a source video stream (such an MPEG format) and may be a multicast video stream, or other types of video streams.

[0031] Various intermediary nodes **108**(**1**), **108**(**2**), . . . ,**108**(N) may distribute source multicast video streams containing encoded content from head-end server **106**. For example, a router (not shown) may be used to route the multicast video stream to various destinations. Other intermediary nodes may include additional routers, switches, and servers. In a telephony provider communications network embodiment, the intermediary nodes **108** may include one or more Digital Subscriber Line Access Multiplexers (DSLAMs), which are multiplexers that receive one or more video streams at a central office location at an edge **112** of network **102**, and distribute the streams to many customers' end-user equipment (a presentation device **116**) via a communications link **114**. Typically, the communications link **114** between network edge **112** and a presentation device **116** has limited bandwidth.

[0032] While some of the embodiments herein are discussed and described with reference to DSLAMs, those skilled the art will readily appreciate that the present invention may be adapted for use in conjunction with any type of edge node including servers, routers, switches, satellite transmitters, and other suitable nodes for distributing content from the edge of a network to an end-user.

[0033] Presentation device **116** may include any device used to decode an encoded video stream. Presentation device **116** may be implemented as a separate device, such as a set-top-box **117**, a satellite receiver (not shown), a modem (not shown) or other devices which are connected to a display device such as a TV **119**. Presentation device **116** may also be integrated with as part of display device (as shown in FIG. **1**) such as a TV **119**, computer (not shown) or monitor (not shown) which has a screen **118** for rendering and displaying content (audio and/or video content).

[0034] Presentation device **116** may include ports (not shown) for receiving data from and transmitting data to network **102**. Typically, data received from network **102** includes multicast video streams. Presentation device **116** is able to tune (or request) certain video streams from network **102**, each video stream usually corresponding to a program channel. A user is typically able to request a channel i.e., desired video-stream content corresponding to the requested channel, usually via a remote **120** or other control means. When the user issues a request to select a video stream associated with a channel, a message is transmitted from presentation device **116** to node **108**(**2**) via link **114**, which is a point-to-point connection. In response node **108**(**2**) selects the video stream associated with the request and delivers the requested video stream to presentation device for display.

[0035] Normally, a channel change cannot occur until an access point in the video stream is received, which can take several seconds to randomly receive, and decode. From the perspective of the user that issued the channel change request, this can lead to a several second delay between when the request is made, and when the first images of video content corresponding to the channel request are rendered and displayed. During that time the screen **118** of TV **119** remains devoid of content except for possible program information.

Reduce Channel Change Delay

[0036] FIG. **2** is a logical illustration of a technique that may be used to reduce channel change delays. This technique reduces the delay in the presentation of the first frames of the video content that occurs after a channel change request when a decoder joins a new multicast video stream. Although the exemplary illustration refers only to a single multicast video stream, it should be appreciated by those skilled in the art that the concepts described herein may apply to multiple incoming video streams: those in which it is desired to reduce channel change delays, and to changes to video streams distributed by other means, such as by broadcast and unicast methods.

[0037] A source video stream **202** received and/or propagated (Step A of FIG. **2**) through network **102** (FIG. **1**). In one embodiment, video stream **202** is a real-time multicast video stream which has been encoded for eventual transmission to a presentation device **116** via network **102**. Video stream **202** typically contains multimedia content corresponding to a program channel, such as video and audio content of a content provider's channel. Video stream **202** is encoded using a digital video compression and transmission format, such as MPEG.

[0038] Next, in Step B video stream **202** (from Step A) is analyzed, access points and other information are identified and tracked. Step B also shows that source multicast video stream **202** is time shifted resulting in a time shifted video stream **206**.

[0039] The analysis of video stream **202** includes parsing out frame locations of various pieces of information required

to support a fast channel change (PAT, PMT, I-frame start, and possibly other data which is referred to as "fast-channel-change information"). That is, in Step B fast-channel-change information is identified and tracked as video stream **202** is transported within network **102**.

[0040] This fast-channel-change information may then be distributed in-band within the transport stream. The fast-channel-change information, such as identifying access points, may be inserted into the MPEG bit-stream in several locations. In one embodiment, the fast-channel-change information may be inserted within additional "user information" fields of the video stream, which can be ignored by a standard (unmodified) decoder such as set-top-box **117**. Alternatively, the fast-channel-change information may be inserted as an additional media type such as audio track **2** tags, which can also be ignored by an unmodified decoder. Still in another embodiment, it is possible to change the MPEG bit-stream to make it non-standard for purposes of inserting the fast-channel-change information. The latter embodiment may require modification of the decoder, however.

[0041] As shall be explained this analysis may be performed by various processing means, such as digital signal processors, located at one or more intermediary points within network **102**, such as head-server **106** (FIG. **1**), nodes **108** (FIG. **1**), and/or any other nodes in a broadcast system network such as a router. For example, in one embodiment video stream **202** is analyzed in at least one node **108** (FIG. **1**) prior to transmission to a set-top-box **117**.

[0042] However, because each channel program (each video stream) is distributed throughout a broadcast system network **102** simultaneously, and information is often common to all, in an alternative embodiment, information may be generated once, upstream, such as head-end server **106** (FIG. **1**) or at a content creation center **103**, and then distributed to network elements such as various nodes **108** distributed throughout network **102** interspersed between network **102** and presentation devices **116**.

[0043] As mentioned above, in step B, video stream **202** is time shifted resulting in time shifted video stream **204**. Time shifting occurs as a result of analyzing video stream **202** and recording (e.g. storing) the fast-channel-change information. For example, in one embodiment video stream **202** is analyzed as described above, and written into memory **524** (FIG. **5**) of node **108** as incoming packets (e.g. frames) are received, and then read at various times later as the packets are transported to a decoder **117**. Preferably, the time delay between the video stream **202** and time shifted video stream **204** is minimized.

[0044] In Step C, a channel change request is received. That is, in one embodiment, an end-user, typically a subscriber, makes a request to change channels via a remote control **120**. In response, decoder **117** sends a channel change request message (i.e., signal) **222** to network **102** such as node **108**(**2**) shown in FIG. **1**. The request is received at a point R in time. In another embodiment, the channel change request signal **222** can be generated, not by the decoder **117** as shown in FIG. **2**, but by the service provider's system, such as head-end server **106** (FIG. **1**) or node **108** (FIG. **1**).

[0045] Next in Step D, a frame (or some other packet) of time shifted video stream **206** on or before an access point **208** is selected to commence the transmission of the time shifted video stream responsive to the channel change request. In one embodiment, a frame on or before the most recently received access point **208**(**2**) is selected after point R, and forwarded to presentation device **116**. By selecting the most recently received access point after a request, the time difference between "live" (video stream **202**) and the start of time shifted video stream is minimized. The fast-channel-change information is used to select the frame(s) on or before the next available access point **208**. It is noted that some frames prior to an access point **208** may be selected to provide the decoder **117** with some prior information such as B- or P-frames to more readily decode the video the first images of time shifted video stream **206**.

[0046] Initial display of images associated with time shifted video stream **206** is reduced as compared to conventional systems, as information needed for immediate decoding is made immediately available to decoder **117**. Thus, the user should experience presentation of video content on screen **118** shortly after **208**(**2**) access point is received by decoder **117**. That is, a decoder **116** is immediately able to start decoding a stream of packets with a least possible delay, minimized channel delay, and improved viewer experience. The end-user is unable to detect that their broadcast may be slightly delayed from the "live" video stream (the source multicast video stream **202**).

[0047] Time shifted video stream **206** is thereafter continuously forwarded to the presentation device **116** for constant playback as long as device **116** remains tuned to the channel associated with video stream **202**. There is no switch back to the "live" video stream. That is, no attempt is made to synchronize back from time shifted video stream of the requesting channel to the source multicast stream **202**. There is little benefit in attempting to switch to the original multicast stream rather than a time shifted copy, as the link **114** between each presentation device **116** is not shared with any other presentation device as the link is a point-to-point connection. However, it is possible to re-synchronize with the non-buffered stream directly from the upstream network source in alternative embodiments.

[0048] In one embodiment, incoming frames of video stream **202** are tagged with an arrival time as they are received. After a channel change request is received f, and the information packets (PAT, PMT, etc) have been forwarded to the requesting decoder **117** for playback, a scheduling algorithm may be launched which calculates a time difference between current time and when the first packet of the last I-frame (or access point) was received. This time difference is used to transmit each successive packet sent thereafter maintaining the time difference as a constant.

[0049] Jitter introduced by network **102** up to edge **112** may not be removed as all packets are only delayed by a difference equal to the time difference, which does not affect any other parameters associated with jitter. Alternatively, a packet stream's PCR may be recovered and the packets transmitted using a clock may be de-jittered.

Methods of Operation

[0050] FIG. **3** illustrates an exemplary method **300** for reducing channel change delays. Method **300** includes blocks **302**, **304**, **306**, **308** and **310** (each of the blocks represents one or more operational acts). The order in which the method is described is not to be construed as a limitation, and any number of the described method blocks can be combined in any order to implement the method. Furthermore, the method can be implemented in any suitable

hardware, software, firmware, or combination thereof. Additionally, although each module in FIG. **3** is shown as a single block, it is understood that when actually implemented in the form of computer-executable instructions, logic, firmware, and/or hardware, that the functionality described with reference to it may not exist as a separate identifiable block.

[0051] Referring to FIG. **3**, in block **302** a multicast video stream is transported in a broadband network. The multicast video stream is associated with a particular channel. For example, a multicast source video stream **202** received and/or propagated (Step A of FIG. **2**) through network **102** (FIG. **1**). Video stream **202** (FIG. **2**) is a real-time multicast video stream which has been encoded for eventual transmission to a presentation device **116** via network **102**.

[0052] In block **304**, the multicast video stream is analyzed; access points and other information are identified and tracked. For example, video stream **202** (FIG. **2**) is received by node **108** (FIG. **1**) which analyzes the video stream **202** (FIG. **2**) including parsing out frame locations of various pieces of information required to support a fast channel change like access points "fast-channel-change information". Access points, such as I-frames are the type of fast-channel-change information which is parsed from video stream **202**.

[0053] In block **306**, the fast-channel-change information is recorded. For example, the fast channel change information is recorded in-band within locations of a video stream or out-of-band in memory, such as memory **524** in FIG. **5**.

[0054] In block **308**, the multicast video stream is time shifted. For example, video stream **202** (FIG. **2**) is recorded in memory **524** of node **108**, resulting in time shifted video stream **204** (see also step B of FIG. **2**). Time shifting occurs as a result of analyzing video stream **202**, recording a copy of video stream **202** as a time shifted video stream **204**, and recording (e.g. storing) the fast-channel-change information.

[0055] In block **310**, a channel change request is received. For example, channel change request signal **222** (FIG. **2**) is received from a decoder **117** (FIGS. **1** and **2**) as a result of a user (i.e., viewer) tuning to specific channel, such as at a point R in FIG. **2**.

[0056] In block **312**, a frame of the time shifted video stream on or before the access point is selected. For example, based on the fast-channel-change information a point of access **208**(**2**) (FIG. **2**) is selected for by node **108** for immediate transmission to decoder **117**.

[0057] In block **314**, the time shifted video stream is continuously transmitted to the presentation device commencing with packets on or before the access point as selected in block **312**. As used herein on or before means the selected access point itself or one or more frames/packets before a selected access point.

[0058] In block **316**, the time shifted video stream is then presented. For example, video content is displayed on screen **118**, shortly after frames on or before the access point is received by decoder **117**. There is no switch back to the live video stream. It is noted that method **300** can be performed at various locations in network **102**, including distributed in more than one processing node in a network.

Other Features and Exemplary Platforms

[0059] FIG. **4** illustrates a more detailed view of an environment in which channel change reduction techniques as described may be implemented. At least one node **108** is interposed between a video distribution network **406** and end user equipment, such as Set Top Boxes (STBs) **402**(**1**), **402**(**2**), . . . **402**(N).

[0060] Node **108** represents any general or special purpose computing device such as a server and/or router, or which may be used in combination with other suitable intelligent devices including any network devices associated with network **106**. For example, in one embodiment, node **108** may be implemented as a Digital Subscriber Line Access Multiplexer (DSLAM). Node **108** may also be implemented as a router or switch used in other network environments including cable, satellite, DSL, ISDN, fiber-to-home technologies and so forth. Accordingly, node **108** may be any node interposed between a broadcast provider's network and the customer premise equipment and vise versa.

[0061] Node **108** includes at least memory (logically represented as a buffer **410**) with the ability to record a time shifted video stream such as time shifted video stream **206** (FIG. **2**). Node **108** includes a control module (see **504** of FIG. **5**) configured to detect upstream channel requests changes sent to network **102** by customer equipment devices. This causes node **108** to forward a time shifted video stream from network **102** to STBs **402**.

[0062] Buffer **410** can be implanted as any type of random access memory. The capacity of buffer **410** may be increased or decreased depending on demand or by the total number of STBs **402** directly serviced by a node **108**. A program clock reference (PCR) discontinuity message may be sent by node **108** to any STB **402** receiving a time shifted copy of the source multicast stream to warn the STB **402** that timing information may have changed. Alternatively, in another embodiment, such information may not be necessary (as well as the necessity to transmit the PAT and PMT packets), if the STB has a priori knowledge of the PID assignments for video and audio.

[0063] In still another embodiment, it is possible to reduce processing/timing overhead by grouping similar output streams forwarded to different STBs **402**. This may involve determining first whether any other STBs are already receiving the same stream requested by the STB which making the channel change request. If so, an I-frame (or other point of access) directed to the STB already receiving the stream may be sent to the requesting STB, if the next I-frame is located within an acceptable time period. Otherwise, immediate transmission of buffered I-frames may be sent instead. In this way the cost of not having the absolutely minimum channel change time, may afford the node **108** time to support a higher throughput overall, as output timing scheduling is reduced.

[0064] Supposing a node **108** can support approximately 1000 STBs (this number may vary higher or lower depending on the implementation), there is a high probability that at least one viewer watching each of the majority of popular program channels is relatively high. As the node **108** will already be receiving this stream channel changing will be naturally fast, as all information can be immediately sent from a downstream feed of packets.

[0065] However, there is chance that a program is unwatched by any viewer, at which point the typical slow channel change may be a default mode of operation. Possible solutions to this problem are to accept the problem, or have node **108** connected to receive all available programs. The latter may be constrained by network bandwidth capacities.

[0066] It is noted that the time shifting may be performed by other elements within the network **102**, such as within a router **106** (also referred to as the head-end server) and which feeds one or more nodes **108** having links with STBs **402**. It is anticipated in such an implementation, that several nodes **108** (perhaps several to several hundreds) will be fed by at least one central router, such as router **106**.

[0067] FIG. **5** illustrates an exemplary physical representation of a computer platform used to implement functionality performed by any intermediary node to reduce channel change delays, such as node **108** (FIG. **1**).

[0068] In particular, computer platform **500** represents any general purpose or special purpose computing system with modifications to hardware, firmware, and/or software. Computer platform **500** is only one example of computer platform and is not intended to suggest any limitation as to the scope of use or functionality of any system or method described herein. Neither should the computer platform **500** be interpreted as having any dependency or requirement relating to any one or combination of components described herein.

[0069] Computer platform **500** includes a control module **504**, which controls the operation of platform **500**. Control module **504** can be implemented in hardware, firmware, logic, software, or any combination of thereof. In the illustrative exemplary implementation control module **504** is implemented as a program module that may be described in the general context of computer-executable instructions, being executed by a computer, i.e., one or more processors in a processing unit **522**. Control module **504** resides in memory **524**.

[0070] Memory **524** typically includes a variety of computer readable media. Such media can be any available media that is accessible by computer platform **500** and includes both volatile and non-volatile media, removable and non-removable media. The computer-readable media provide non-volatile storage of computer readable instructions, data structures, program modules, and other data for computer platform **500**. Any number of program modules can be stored in the computer readable media of memory **524**, including one or more portions of control module **504**. For example, a fast channel change program module **555**, that performs the techniques and methods described with reference to FIGS. **2-4** above may reside therein. Such a program module **555** when executed, by a computer, may perform in at least in part, a method of (i) analyzing a multicast video stream before the multicast video stream is relayed to a presentation device; (ii) identifying where at least one access point in the multicast video stream is located; and (iii) forwarding information indicating where the at least one access point is located based upon the identification.

[0071] It is also noted that portions of control module **504** may be stored in a remote memory storage device remote from computer platform **500**. Additionally, even though control module **504** is illustrated herein as a discrete block, it is recognized that any of these components may reside at various times in different storage components of computer platform **500** and are executed by one or more processors of a computer, such as processing units **522**.

[0072] It is also noted that this invention may be applied in any situation where the selection between video streams is performed. For example, these techniques may be employed by a decoder which has available to it a number of video streams continuously, either by intelligent prediction of the user's next action, such as during channel surfing, or by dint of the delivery means, such as in the case of the broadcast nature of a cable television service.

[0073] Further, it should be noted that the change request may be initiated by an entity other than the decoder. Examples of alternative control sources would be when the invention is used within a device to insert commercial advertising into television programs and when the service operator wishes to dynamically redirect a customer to a source of content.

[0074] It is to be understood that the present invention is not limited to the embodiments described above, but encompasses any and all embodiments within the scope of the subjoined Claims and their equivalents.

What is claimed is:

1. A method for reducing channel change delays, comprising:

receiving a channel change request;

transporting a video stream associated with the channel change request;

identifying at least one access point in the video stream;

time shifting the video stream resulting in a time shifted video stream;

transmitting the time shifted video stream to a presentation device on a continuous basis without returning to the video stream; and

selecting a frame of the time shifted video stream on or before the access point to commence the transmission of the time shifted video stream.

2. The method as recited in claim **1**, wherein time shifting the video stream includes storing the video stream in random access memory prior to transmission.

3. The method as recited in claim **1**, wherein identifying at least one access point in the video stream includes analyzing frames of the video stream.

4. The method as recited in claim **1**, wherein identifying at least one access point in the video stream includes analyzing frames of the video stream and storing information associated with the identification of the at least one access point.

5. The method as recited in claim **1**, further comprising inserting information associated with the identification of at least one access point within the time shifted video stream.

6. The method as recited in claim **1**, further comprising inserting information associated with the identification of at least one access point within a media type packet of the time shifted video stream.

7. The method as recited in claim **1**, further comprising storing information associated with the identification of at least one access point in a message packet which is separate from the time shifted video stream.

8. The method as recited in claim **1**, wherein the channel change request is received from a presentation device.

9. The method as recited in claim **1**, further comprising discontinuing the transmitting of the time shifted video stream when no presentation devices remain tuned to a channel associated with the received channel change request.

10. A computer-readable medium having computer-executable instructions that, when executed by a computer perform a method comprising: analyzing a video stream before the video stream is relayed to a presentation device; identifying where at least one access point in the video

stream is located; and forwarding information indicating where the at least one access point is located based upon the identification.

11. A medium as recited in claim **10**, further comprising:

time shifting the video stream resulting in a time shifted video stream;

transmitting the time shifted video stream to a presentation device on a continuous basis without returning to the video stream; and

selecting a frame of the time shifted video stream on or before the at least one access point, wherein the selection of the frame is based upon the information indicating where the at least one access point is located; and

commencing the transmission of the time shifted video stream to the presentation device with the selected frame.

12. A medium as recited in claim **10**, further comprising inserting the message into the video stream after the analysis.

13. A medium as recited in claim **11**, further comprising receiving a channel change request and transmitting a time shifted video stream associated with the channel change request.

14. A medium as recited in claim **10**, further comprising sending the message out of band from the video stream after the analysis.

15. A system for reducing delay-associated with the initial presentation of video content after a channel change request, comprising:

means for analyzing frames of a video stream associated with a channel to identify locations of access points in the video stream prior to relaying the video stream to a presentation device;

means for storing information indicating the locations of the access points;

means for time shifting the video stream;

means for transmitting the time shifted video stream to a presentation device on a continuous basis for so long as the presentation device remains tuned to the channel corresponding to the channel change request; and

means for selecting the first available frame on or before an access point to commence transmission of the time shifted video stream to the presentation device, wherein the selection is based on the stored information.

16. The system as recited in claim **15**, wherein the means for analyzing frames of a video stream includes at least one processor.

17. The system as recited in claim **15**, wherein the means for transmitting the time shifted video stream to a presentation device further includes one or multiple output ports configured to transmit multiple copies of the time shifted video stream to multiple presentation devices.

18. The system as recited in claim **15**, wherein the information is stored in-band with the time shifted video stream.

19. The system as recited in claim **15**, wherein the information is stored out-of-band from the time shifted video stream.

20. The system as recited in claim **15**, wherein the means for analyzing frames of a video stream and the means for transmitting the time shifted video are located remotely from each other in separate communication nodes of a video content distribution network.

* * * * *