US009319852B2

(12) **United States Patent**
Shaffer et al.

(10) **Patent No.: US 9,319,852 B2**
(45) **Date of Patent: Apr. 19, 2016**

(54) **INTEROPERABILITY AND COMMUNICATIONS SYSTEM DYNAMIC MEDIA PROXY BASED ON CAPABILITY NEGOTIATION**

(71) Applicant: **Cisco Technology, Inc.**, San Jose, CA (US)

(72) Inventors: **Shmuel Shaffer**, Palo Alto, CA (US); **Amit Barave**, Sunnyvale, CA (US); **Steven Christenson**, Campbell, CA (US); **Marcelo Oliveira**, San Jose, CA (US)

(73) Assignee: **Cisco Technology, Inc.**, San Jose, CA (US)

(*) Notice: Subject to any disclaimer, the term of this patent is extended or adjusted under 35 U.S.C. 154(b) by 0 days.

(21) Appl. No.: **14/523,299**

(22) Filed: **Oct. 24, 2014**

(65) **Prior Publication Data**

US 2015/0045082 A1 Feb. 12, 2015

Related U.S. Application Data

(62) Division of application No. 12/127,397, filed on May 27, 2008, now Pat. No. 8,892,149.

(51) **Int. Cl.**

H04B 7/00	(2006.01)
H04W 4/08	(2009.01)
H04L 29/06	(2006.01)

(52) **U.S. Cl.**

CPC ***H04W 4/08*** (2013.01); ***H04L 65/105*** (2013.01); ***H04L 65/605*** (2013.01); ***H04L 69/24*** (2013.01)

(58) **Field of Classification Search**

USPC 455/519

See application file for complete search history.

(56) **References Cited**

U.S. PATENT DOCUMENTS

2004/0224668	A1	11/2004	Shell et al.	
2007/0036100	A1 *	2/2007	Shaffer	H04W 4/021 370/328

(Continued)

OTHER PUBLICATIONS

Cisco Systems. Cisco Brings IP Networking to World of Two-Way Radios. http://newsroom.cisco.com/dlls/2005/ts_102405.html. Last accessed Jun. 3, 2008.

(Continued)

Primary Examiner — Ankur Jain

(74) *Attorney, Agent, or Firm* — Edell, Shaprio & Finnan, LLC

(57) **ABSTRACT**

A system and methodology to facilitate communication between non-compatible communication devices by utilization of a dynamic media proxy is provided. Information associated with an endpoint, such as, media capabilities, identity and system resource information is collected. Media proxy'ing is performed as part of capability negotiation. A dynamic media proxy is employed based on an analysis of the collected information. An analysis component can identify an endpoint that does not adhere to specific rules of transmission and can dynamically connect such an endpoint to a VTG (virtual talk group) via a proxy to prevent the endpoint from transmitting media into an active VTG that already has multiple talkers streaming media. Additionally, the location where media processing can occur can be dynamically determined based on the available system resources.

20 Claims, 11 Drawing Sheets

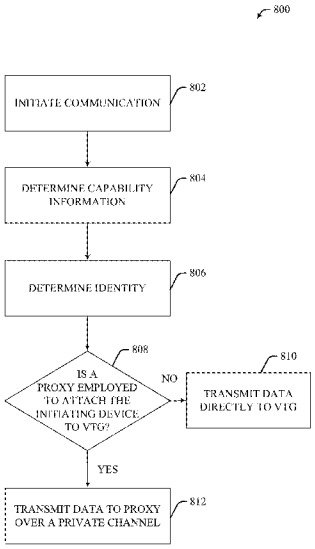

(56) **References Cited**

U.S. PATENT DOCUMENTS

2007/0105579	A1*	5/2007	Shaffer	H04L 65/605 455/519
2007/0270172	A1	11/2007	Kalley et al.	
2009/0093235	A1	4/2009	Grealish et al.	
2011/0004636	A1	1/2011	Parkkinen et al.	

OTHER PUBLICATIONS

Cisco Systems. Enable Communication Interoperability. http://www.cisco.com/en/US/products/ps6712/products_announcement0900aecd803498d8.html. Last accessed Jun. 3, 2008.

* cited by examiner

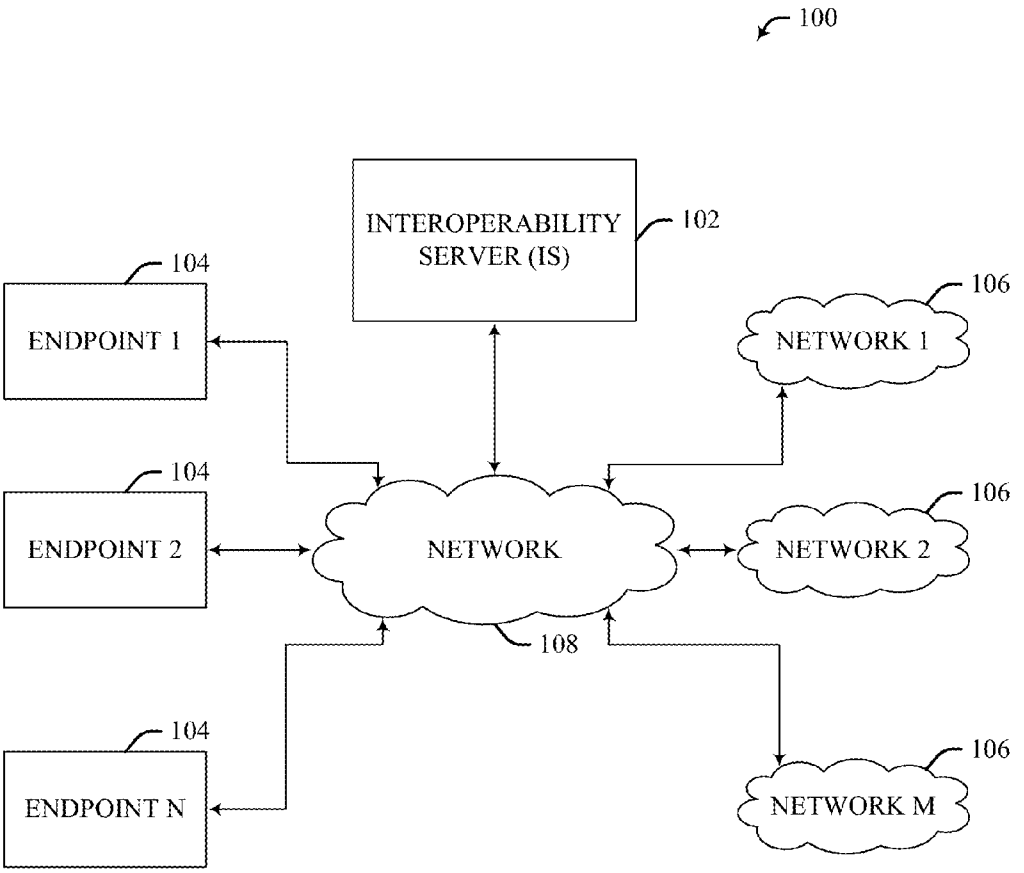
100
INTEROPERABILITY SERVER (IS)
102
104
ENDPOINT 1
104
ENDPOINT 2
104
ENDPOINT N
NETWORK
108
106
NETWORK 1
106
NETWORK 2
106
NETWORK M

FIG. 1

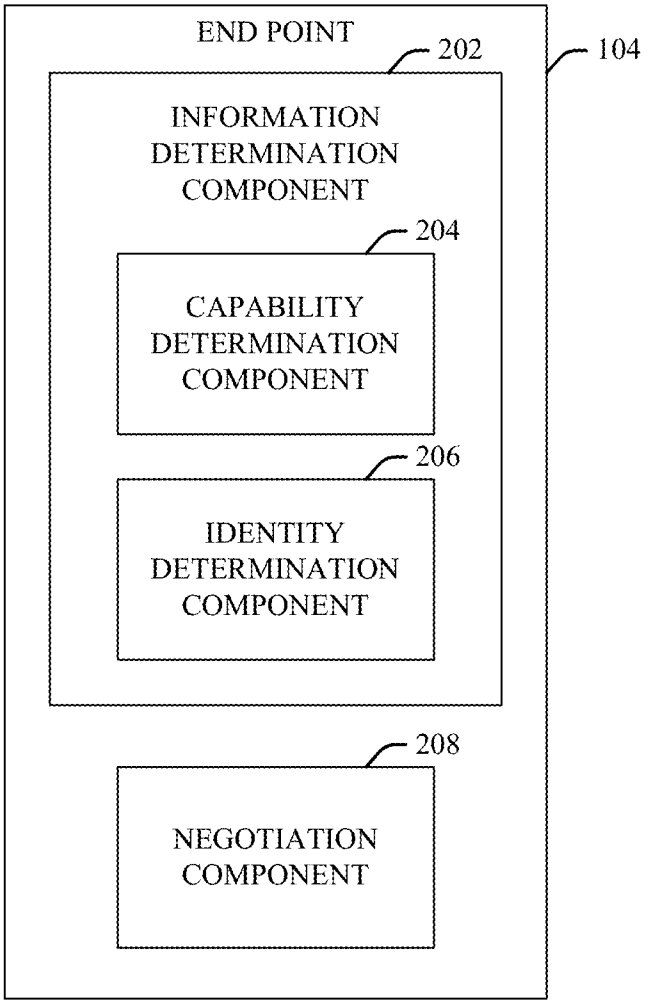
END POINT
104
202
INFORMATION DETERMINATION COMPONENT
204
CAPABILITY DETERMINATION COMPONENT
206
IDENTITY DETERMINATION COMPONENT
208
NEGOTIATION COMPONENT

FIG. 2

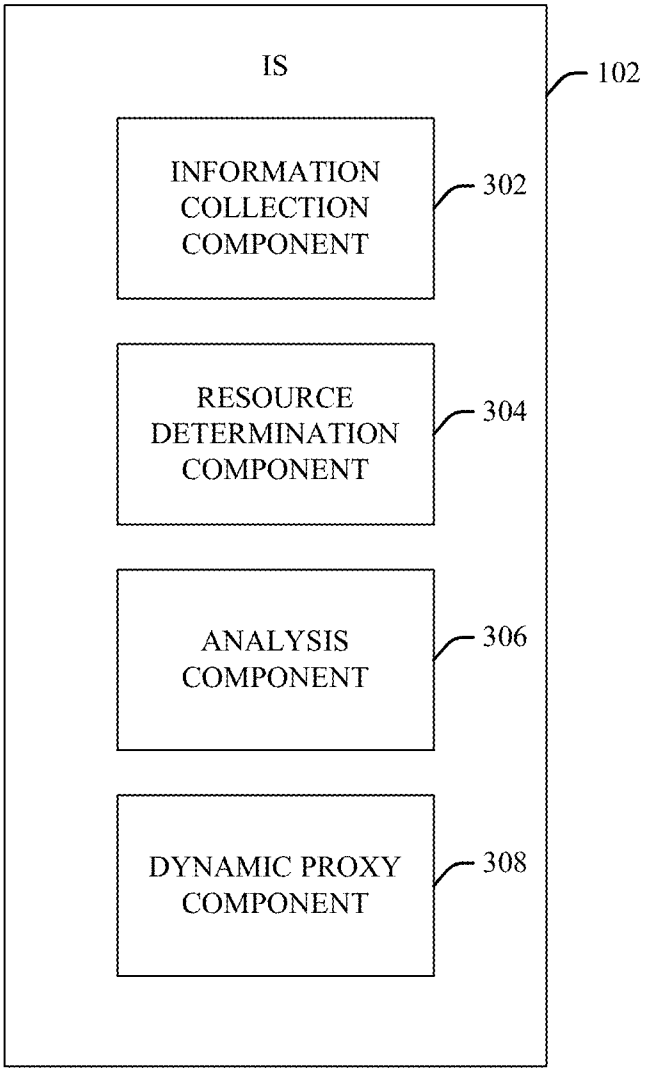
IS
102
INFORMATION COLLECTION COMPONENT
302
RESOURCE DETERMINATION COMPONENT
304
ANALYSIS COMPONENT
306
DYNAMIC PROXY COMPONENT
308

FIG. 3

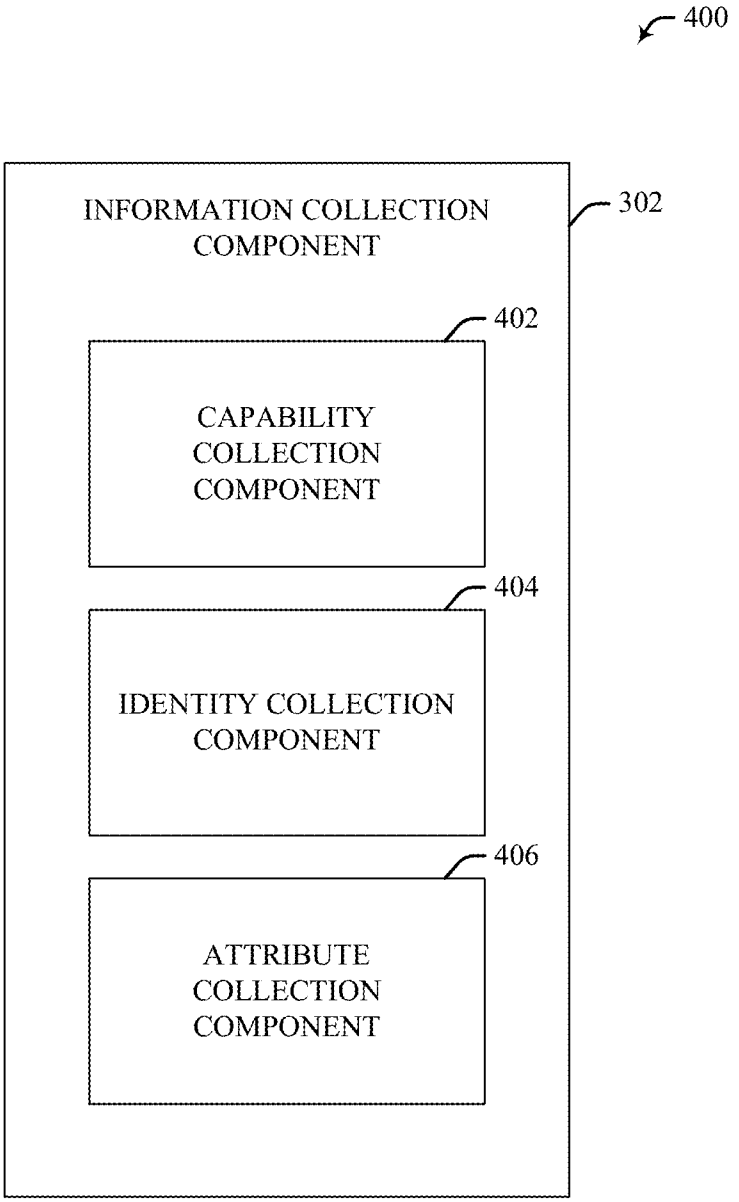
400
INFORMATION COLLECTION COMPONENT
302
402
CAPABILITY COLLECTION COMPONENT
404
IDENTITY COLLECTION COMPONENT
406
ATTRIBUTE COLLECTION COMPONENT

FIG. 4

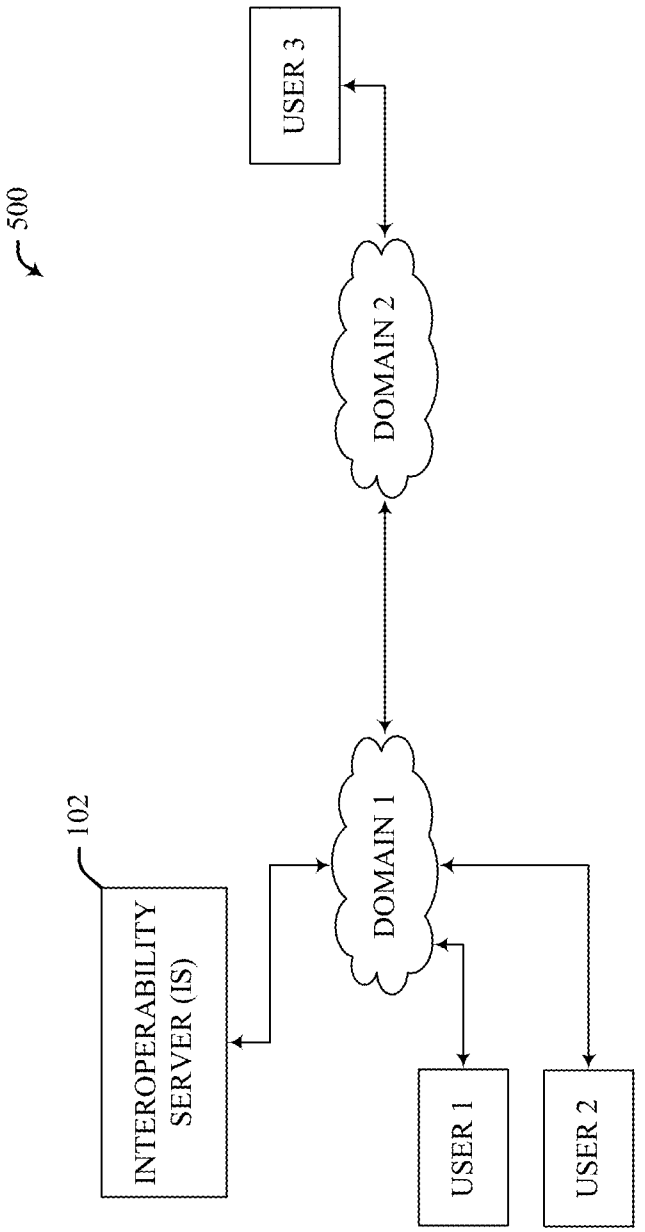
500
102
INTEROPERABILITY SERVER (IS)
DOMAIN 1
DOMAIN 2
USER 1
USER 2
USER 3

FIG. 5

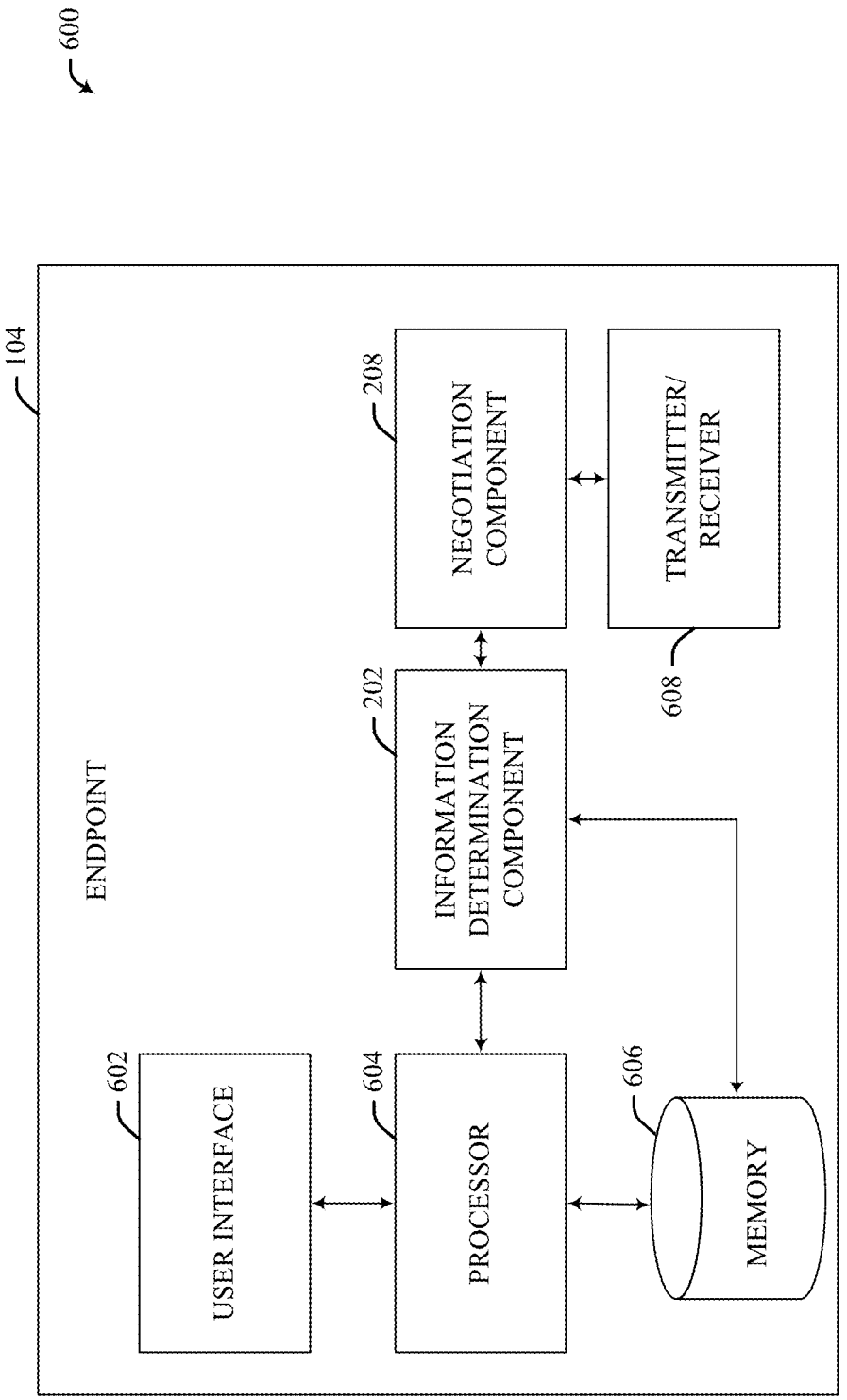
600
104
ENDPOINT
602
USER INTERFACE
604
PROCESSOR
606
MEMORY
202
INFORMATION DETERMINATION COMPONENT
208
NEGOTIATION COMPONENT
608
TRANSMITTER/ RECEIVER

FIG. 6

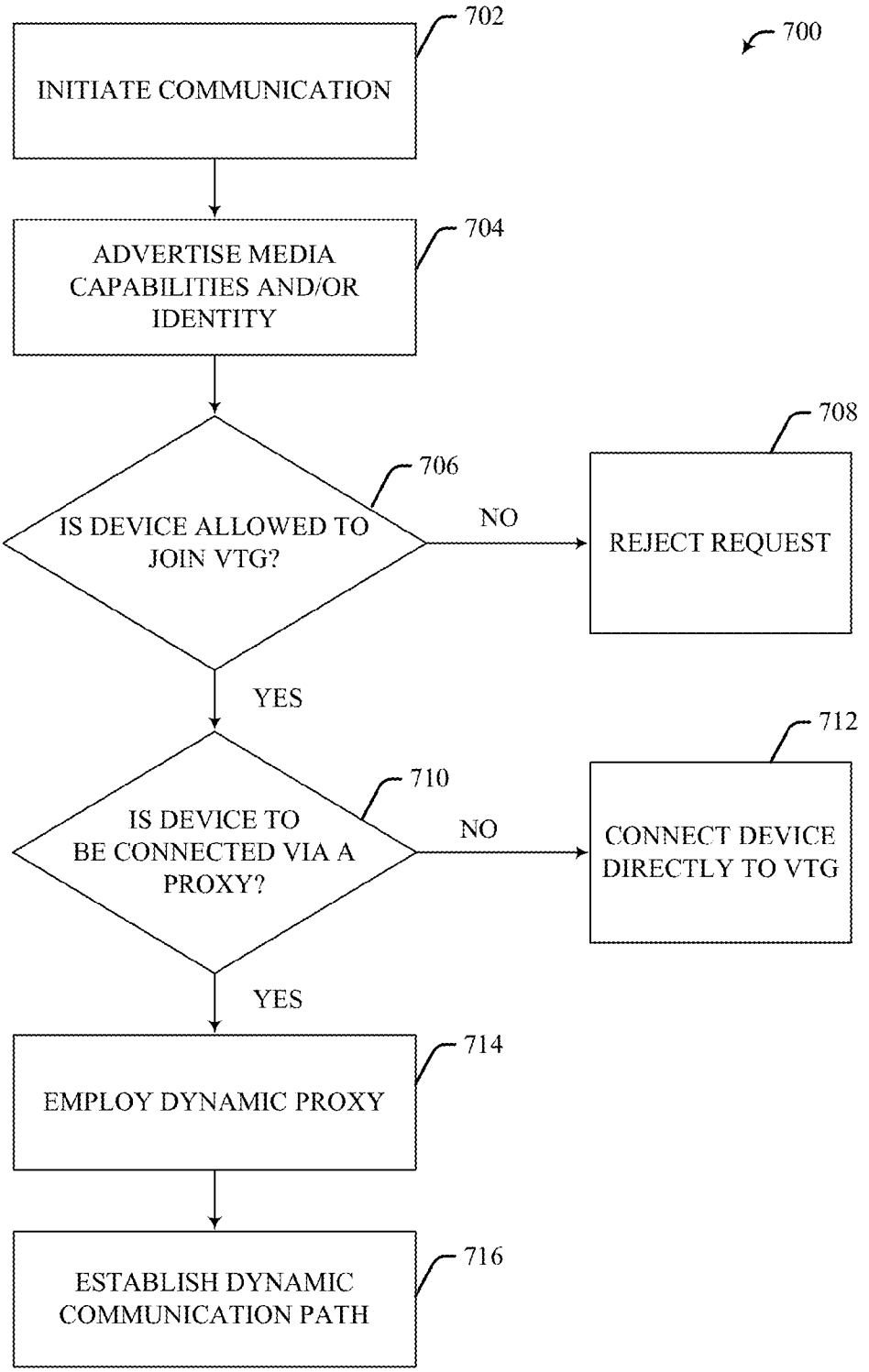
700
702
INITIATE COMMUNICATION
704
ADVERTISE MEDIA CAPABILITIES AND/OR IDENTITY
706
IS DEVICE ALLOWED TO JOIN VTG?
NO
708
REJECT REQUEST
YES
710
IS DEVICE TO BE CONNECTED VIA A PROXY?
NO
712
CONNECT DEVICE DIRECTLY TO VTG
YES
714
EMPLOY DYNAMIC PROXY
716
ESTABLISH DYNAMIC COMMUNICATION PATH

FIG. 7

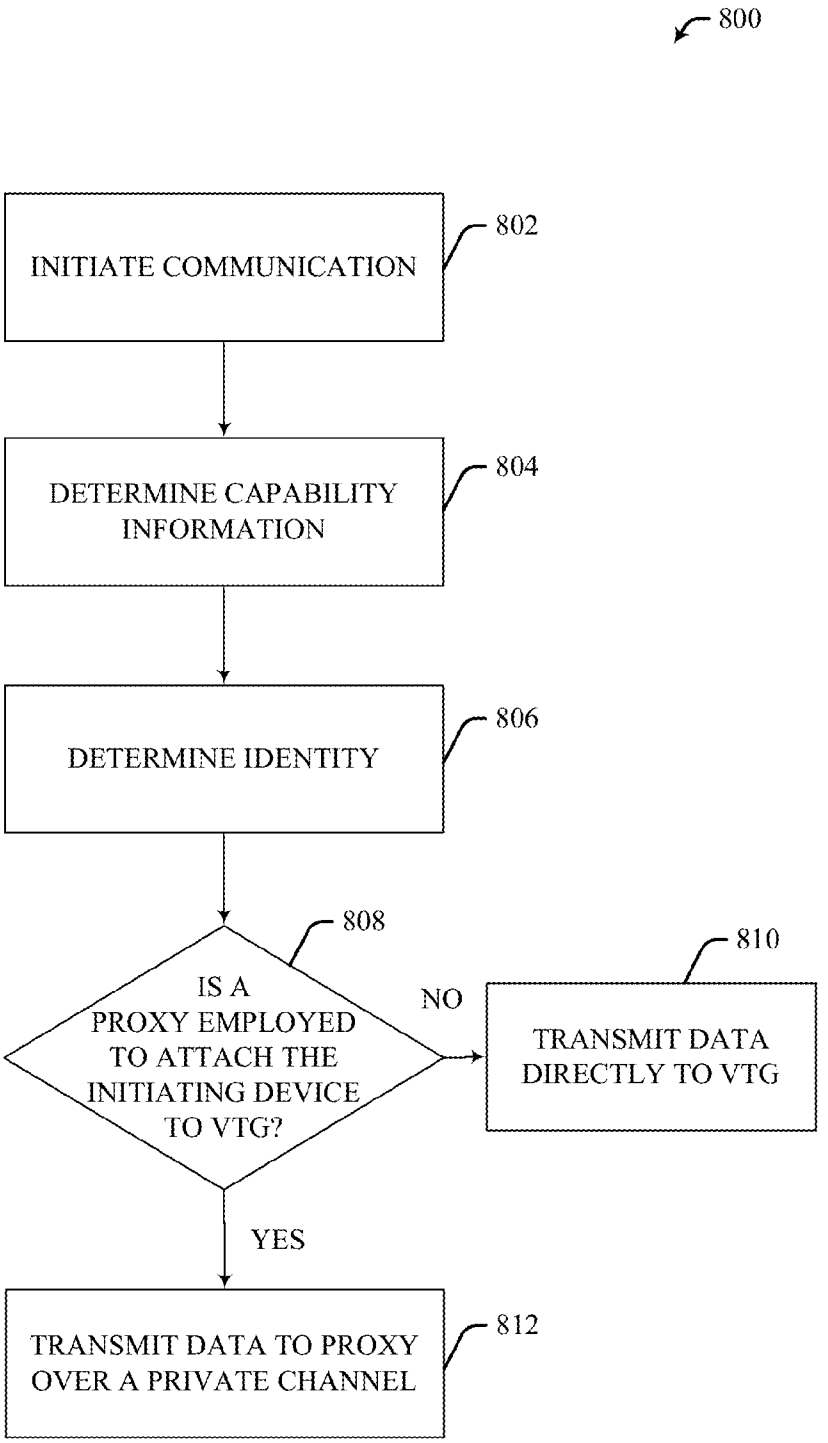
800
INITIATE COMMUNICATION
802
DETERMINE CAPABILITY INFORMATION
804
DETERMINE IDENTITY
806
IS A PROXY EMPLOYED TO ATTACH THE INITIATING DEVICE TO VTG?
808
NO
TRANSMIT DATA DIRECTLY TO VTG
810
YES
TRANSMIT DATA TO PROXY OVER A PRIVATE CHANNEL
812

FIG. 8

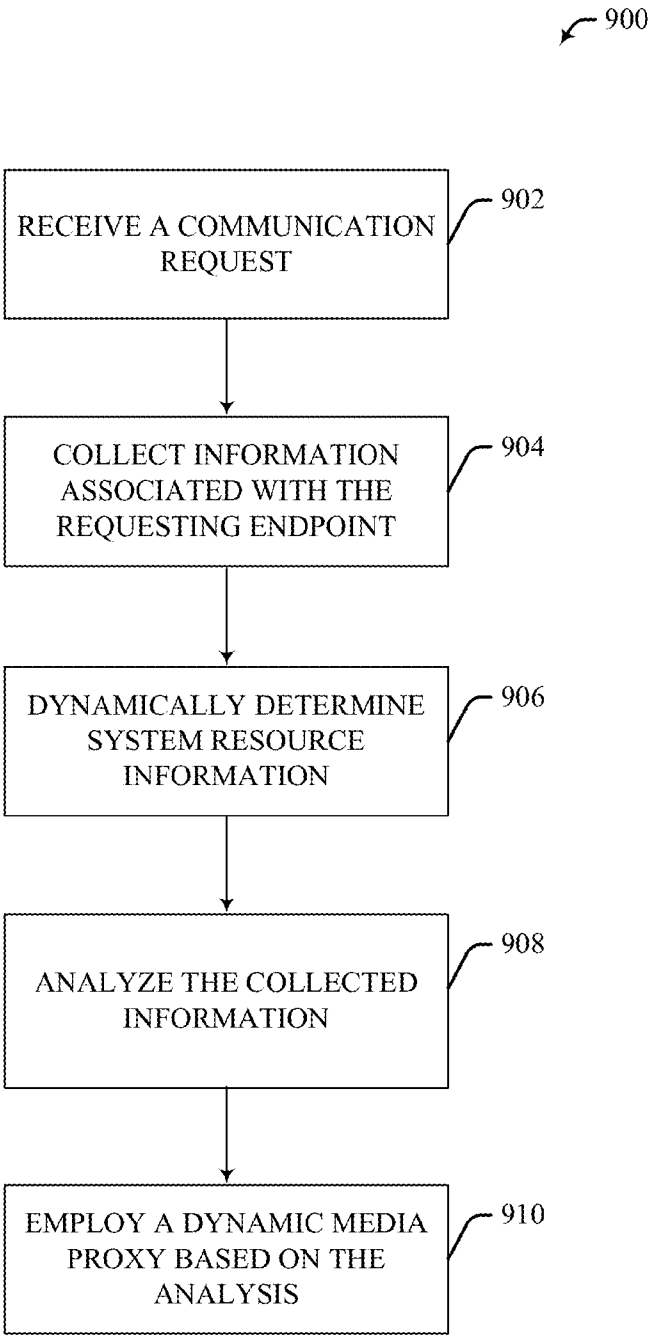
900
RECEIVE A COMMUNICATION REQUEST
902
COLLECT INFORMATION ASSOCIATED WITH THE REQUESTING ENDPOINT
904
DYNAMICALLY DETERMINE SYSTEM RESOURCE INFORMATION
906
ANALYZE THE COLLECTED INFORMATION
908
EMPLOY A DYNAMIC MEDIA PROXY BASED ON THE ANALYSIS
910

FIG. 9

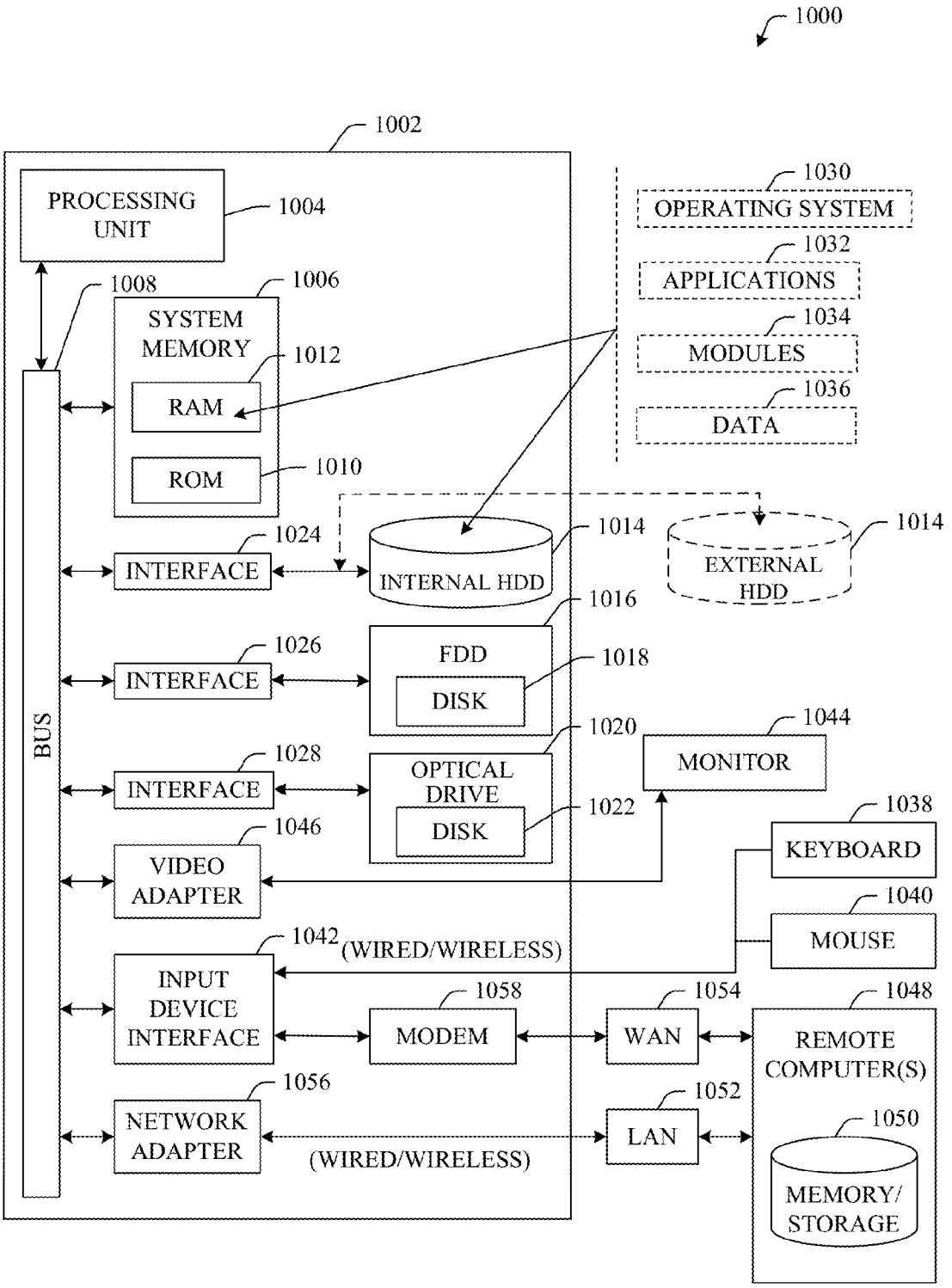
1000
1002
PROCESSING UNIT
1004
1008
1006
SYSTEM MEMORY
1012
RAM
ROM
1010
BUS
1030
OPERATING SYSTEM
1032
APPLICATIONS
1034
MODULES
1036
DATA
1024
INTERFACE
INTERNAL HDD
1014
EXTERNAL HDD
1014
1016
1026
INTERFACE
FDD
DISK
1018
1020
1044
MONITOR
1028
INTERFACE
OPTICAL DRIVE
DISK
1022
1038
KEYBOARD
1046
VIDEO ADAPTER
1040
MOUSE
1042
(WIRED/WIRELESS)
INPUT DEVICE INTERFACE
1058
MODEM
1054
WAN
1048
REMOTE COMPUTER(S)
1056
NETWORK ADAPTER
(WIRED/WIRELESS)
1052
LAN
1050
MEMORY/ STORAGE

FIG. 10

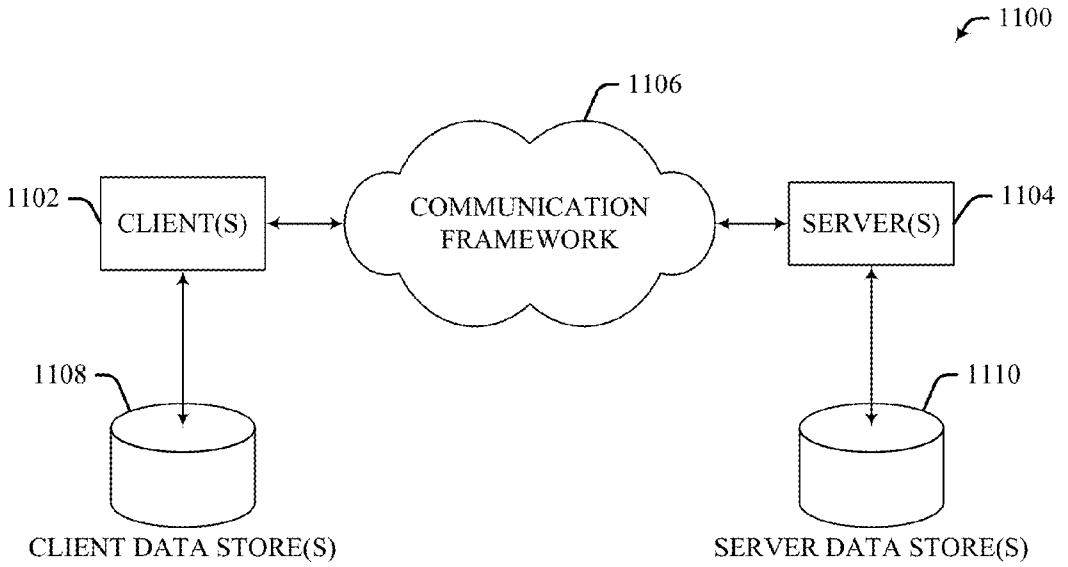
1100
1106
1102
CLIENT(S)
COMMUNICATION FRAMEWORK
SERVER(S)
1104
1108
1110
CLIENT DATA STORE(S)
SERVER DATA STORE(S)

FIG. 11

INTEROPERABILITY AND COMMUNICATIONS SYSTEM DYNAMIC MEDIA PROXY BASED ON CAPABILITY NEGOTIATION

BACKGROUND

Businesses around the world including public and private groups, such as security and safety personnel (e.g., police, fire fighters and ambulance drivers) use communication networks that employ differing technologies and/or standards for communication. Many networks utilize land mobile radios communicating through push-to-talk technologies. However, communications among different endpoints of different networks such as endpoints that employ differing technologies and/or standards may be difficult. Collaboration between the different agencies and networks tends to be ad hoc and inefficient and involves laborious manual intervention.

Interoperability systems can employ an Internet protocol (IP) network collaboration platform that brings two-way radios into the realm of IP networking, offering all the benefits of this widely embraced, standards-based technology and extending the reach of two-way radios to other voice, video and data networks. Interoperability systems employ standards-based IP technologies to join various non-compatible communications systems into one, cohesive infrastructure. The interoperability system expects certain behavioral conformance from the end points in the system to maintain a consistent end user experience, such as, but not limited to, audio quality, number of active talkers in a group, or talk group features (e.g. floor control, priority, pre-emption, etc.). Endpoints developed and controlled by the interoperability system software can adhere to the expected behavioral characteristics. However, endpoints based on platforms external to the interoperability system cannot automatically conform to the expected characteristics. Further, endpoints that are not complying with the interoperability system behavior cannot respect floor control of the system. Such endpoints can lose out on talk group features, such as, talker-id. Furthermore, endpoints based on non-interoperability platforms can potentially abuse the system through intentional and/or unintentional rogue behavior.

BRIEF DESCRIPTION OF THE DRAWINGS

FIG. **1** illustrates a block diagram of an example system that can be employed to dynamically join various non-compatible communication systems into a cohesive infrastructure.

FIG. **2** illustrates an example endpoint that initiates a communication session according to an embodiment of the subject specification.

FIG. **3** illustrates an example interoperability system that can dynamically facilitate communication between non-compatible communication devices in accordance with embodiment of the specification.

FIG. **4** illustrates an example system that facilitates collection of information associated with an endpoint that initiates a communication session according to an embodiment of the subject specification.

FIG. **5** illustrates an example interoperability system that can dynamically determine where media processing can be performed in accordance with an embodiment of the specification.

FIG. **6** illustrates an example system that can be employed to communicate with an interoperability system according to an embodiment of the specification.

FIG. **7** illustrates an example flow chart of procedures that dynamically facilitate communication between non-compatible communication devices in accordance with embodiment of the specification.

FIG. **8** illustrates an example flow chart of procedures for dynamically communicating with a device in an interoperability communication system via a dynamic media proxy in accordance with the specification.

FIG. **9** illustrates an example flow chart of procedures that facilitate utilization of a dynamic media proxy, according to an embodiment of the subject specification.

FIG. **10** illustrates a block diagram of a computer operable to execute the disclosed architecture.

FIG. **11** illustrates a schematic block diagram of an exemplary computing environment in accordance with the subject specification.

DESCRIPTION OF EXAMPLE EMBODIMENTS

Overview

The following presents a simplified overview of the claimed subject matter in order to provide a basic understanding of some embodiments described herein. This is not an extensive overview of the claimed subject matter. It is intended to neither identify key or critical elements of the claimed subject matter nor to delineate the scope of that subject matter. Its sole purpose is to present some concepts of the claimed subject matter in a simplified form as a prelude to the more detailed description of example embodiments that is presented later.

The system disclosed and claimed herein, in one embodiment thereof, can dynamically facilitate communication between two or more non-compatible communication devices. The system can dynamically decide to act as a media proxy for a particular communication device and deliver full featured media services to the device. The decision to connect a device via a proxy can be made dynamically based on the capabilities of the communication devices and available system resources.

According to another embodiment of the system, an endpoint that initiates communication can include an information determination component that can determine media capabilities of the endpoint and/or the identity of the endpoint. Furthermore, a negotiation component can advertise the determined information and negotiate a session with an interoperability server (IS) over a private channel. The endpoint can communicate with the IS through custom messaging.

In accordance with another embodiment of the specification, an IS can include an information collection component that can collect information associated with an endpoint that initiates communication. The information can include media capabilities of the endpoint and/or its identity and/or attributes. A resource determination component can determine information associated with available system resources, for example, bandwidth and/or memory. The IS can further include an analysis component that can analyze the information associated with the endpoint and the system resources to determine if the endpoint can be connected to a VTG via a proxy. The analysis component can identify an endpoint that does not adhere to specific rules of transmission and can dynamically connect such an endpoint to a VTG via a proxy to prevent the endpoint from transmitting media into an active VTG that already has multiple talkers streaming media. A

dynamic proxy component can employ a proxy for the endpoint based on the analysis and dynamically establish a path for communication.

Another embodiment of the claimed subject matter relates to a system that can dynamically determine where media processing can be performed in an interoperability system. The determination can be based in part on the available system resources and/or the media capabilities of the endpoints that are joining a virtual talk group (VTG).

In accordance with yet another embodiment of the specification, the system can asses—a security risk associated with allowing a particular endpoint to join a VTG directly. If the identity of the endpoint cannot be validated as trusted and/or secure, the system can either reject the communication request or act as a proxy for the endpoint and join the VTG on behalf of the endpoint. Thus, the system can access control over potential rogue endpoints. The parameters of the VTG can be dynamically altered to conceal the VTG from an identified rogue endpoint, preventing the endpoint from streaming media into the VTG.

The following description and the annexed drawings set forth in detail certain illustrative embodiments of the claimed subject matter. These embodiments may be indicative, however, of but a few of the various ways in which the principles of the claimed subject matter may be employed and the claimed subject matter is intended to include many and/or all such embodiments and their equivalents. Other advantages and novel features of the claimed subject matter will become apparent from the following description of example embodiments when considered in conjunction with the drawings.

The following terms are used throughout the description, the definitions of which are provided herein to assist in understanding various embodiments of the subject specification. The specification is now described with reference to the drawings, wherein like reference numerals are used to refer to like elements throughout. In the following description, for purposes of explanation, numerous specific details are set forth in order to provide a thorough understanding of the subject specification. It may be evident, however, that the specification can be practiced without these specific details. In other instances, well-known structures and devices are shown in block diagram form in order to facilitate describing the specification.

As used in this application, the terms "component" and "system" are intended to refer to an entity capable of processing information (e.g., computer-related entity), either hardware, a combination of hardware and software, software, or software in execution. For example, a component can be, but is not limited to being, a process running on a processor, a processor, an object, an executable, a thread of execution, a program, and/or a computer. By way of illustration, both an application running on a server and the server can be a component. One or more components can reside within a process and/or thread of execution, and a component can be localized on one computer and/or distributed between two or more computers.

As used herein, the term to "infer" or "inference" refer generally to the process of reasoning about or inferring states of the system, environment, and/or user from a set of observations as captured via events and/or data. Inference can be employed to identify a specific context or action, or can generate a probability distribution over states, for example. The inference can be probabilistic—that is, the computation of a probability distribution over states of interest based on a consideration of data and events. Inference can also refer to techniques employed for composing higher-level events from a set of events and/or data. Such inference results in the construction of new events or actions from a set of observed events and/or stored event data, whether or not the events are correlated in close temporal proximity, and whether the events and data come from one or several event and data sources.

Furthermore, the claimed subject matter may be implemented as a method, apparatus, or article of manufacture using standard programming and/or engineering techniques to produce software, firmware, hardware, or any combination thereof to control a computer to implement the disclosed subject matter. The term "article of manufacture" as used herein is intended to encompass a computer program accessible from any computer-readable device, carrier, or media. For example, computer readable media can include but are not limited to magnetic storage devices (e.g., hard disk, floppy disk, magnetic strips . . .), optical disks (e.g., compact disk (CD), digital versatile disk (DVD) . . .), smart cards, and flash memory devices (e.g., card, stick, key drive . . .). Additionally it should be appreciated that a carrier wave can be employed to carry computer-readable electronic data such as those used in transmitting and receiving electronic mail or in accessing a network such as the Internet or a local area network (LAN). Of course, those skilled in the art will recognize many modifications may be made to this configuration without departing from the scope or spirit of the claimed subject matter.

The system disclosed herein, relates to interoperability systems that can dynamically insert a media proxy based on capability negotiation, according to an embodiment of the invention. Conventional systems expect certain behavioral conformance from end points, such as but not limited to, RTCP (Real Time Transport Control Protocol) support, active stream selection, etc. and provide statically configured proxies to enable communication. Further, conventional systems cannot provide an access control over potential malicious endpoints.

The subject disclosure relates generally to communication networks and in particular to an interoperability system that facilitates a dynamic insertion of a media proxy based on capability negotiation. The subject specification provides a system and methodology that may support endpoints that are not compliant with an interoperability system behavior and can asses—the security risk is allowing endpoints to join a talk group. Further, the system can dynamically proxy such endpoints and optimize system resource utilization.

Referring initially to the drawings, FIG. **1** illustrates a system **100** that can be employed to dynamically join various non-compatible communication systems into one, cohesive infrastructure. As an example, the system **100** can allows users of two-way radios, often called push-to-talk radios, and other voice devices, such as cell phones and regular telephones, to directly communicate and collaborate. In one embodiment, the system **100** can include an interoperability server (IS) **102**, endpoints **104** and communication networks **106** that can be connected through a network **108**.

The IS **102** can facilitate communication between different non-compatible communication devices, such as endpoints **104**. As an example, IS **102** can facilitate communications between a two-way radio and a mobile device. Though two-way radios offer an excellent way for mobile workers within a limited geographic area to communicate, most two-way radio systems cannot interact with any other communications system since they use non-compatible technologies. In another example embodiment, IS **102** can facilitate communication between users of UHF radios and VHF radios or amongst users who use different channels on the same frequency band (e.g., VHF). In other instances, radios signals

cannot reach certain areas because of interference or physical barriers, cutting off radio users from the rest of the team or organization. IS **102** can connect two-way radios to other networks, for example, by employing IP (internet protocol) technology standards, and help extend their reach. Thus, IS **102** can bring non-compatible communication devices, such as, push-to-talk (PTT) radios, into a dynamic, real-time, and information-rich collaboration environment and can allow an entity to communicate with a PPT radio with another communication device.

According to an embodiment, IS **102** can employ a system approach to offer a framework based on IP services to provide and maintain a consistent end user experience and data interoperability among endpoints **104** of networks **106** that employ different technologies. IS **102** can allow endpoints **104** to participate in one or more communication sessions based on capability negotiation. The endpoints **104** can initiate a communication session and advertise its capabilities to the IS **102**. The IS **102** can then determine if the endpoint **104** can be allowed to join a talk group based on the information collected about the endpoint **104**. Furthermore, the IS **102** determines if the endpoint **104** can directly connect to the talk group or if it should be connected via a proxy. The IS **102** can dynamically proxy the endpoint **104** based on information regarding the endpoint **104** and information regarding resources of the system (e.g. bandwidth, memory) and/or specific transmission rules based on the number of active media streams in a virtual talk group.

Endpoints **104** can include, but are not limited to, non-compatible communication devices that can participate in a communication session, such as, PTT radios, IP phones, personal digital assistants (PDAs), personal computers, land mobile radios (LMR), and the like. A communication session can be an active communication between two or more endpoints **104**, for example, a communication session can occur between endpoint 1 and endpoint N. The data communicated during the communication session can be most any format of data, such as, but not limited to, voice, text, audio, video, multimedia, control, other information or a combination thereof. It can be appreciated that although N endpoints are illustrated in the figure, namely, endpoint 1 to endpoint N (where N is a natural number from 1 to infinity), most any number of endpoints can be connected to network **108** and/or to networks **106**. Endpoints **104** that are not compliant with the communication networks **106** can employ IS **102** to leverage features of the networks **106**.

System **100** can include one or more communication networks **106**. The networks **106** can include, but are not limited to, IP, non-IP, wireless or wired networks and can be distributed locally or across multiple geographic locations. As an example, networks **106** can include, a local area network (LAN), a wide area network (WAN), a metropolitan area network (MAN), a cellular network, a public switched telephone network (PSTN), a public or private network, a land mobile radios (LMR) network, a satellite network, an internet network or any combination thereof.

Referring now to FIG. **2**, there is illustrated an example endpoint **104** in accordance with an embodiment of the specification. As discussed supra, the endpoint **104** can be a non-compatible communication device, such as, but not limited to, a telephone, a cellular phone, an IP phone, a PDA, a fax machine, a PC, a camera, a camcorder, an LMR, a software radio, such as, Push-to-Talk Management Center (PMC) or the like. According to an embodiment of the subject specification, the endpoint **104** can include an information determination component **202** that can be employed to determine information related to the endpoint **104**.

In one embodiment, the information determination component **202** can include a capability determination component **204** and/or an identity determination component **206**. The capability determination component **204** can determine media capabilities associated with the endpoint **104**, such as, but not limited to, the supported control protocol(s) or the number of incoming streams per talk group or channel supported by the endpoint **104**. Further, the identity determination component **206** can determine an identity associated with the endpoint **104**, such as a talker-id, or IP address. In another example embodiment, the identity of the endpoint can provide the name of the manufacturer and can indicate the capabilities of the said endpoint.

The endpoint **104** can further include a negotiation component **208** that can be employed to negotiate capabilities of the endpoint **104** with an IS **102** (FIG. **1**). The negotiation component **208** can advertise media capabilities and/or the identity associated with the endpoint **104** as determined by the information determination component **202**. More specifically, the negotiation component **208** can determine if the endpoint **104** has initiated a communication and would like to participate in a virtual talk group (VTG). The negotiation component **208** can negotiate a session with an IS **102** (FIG. **1**) over a private unicast and/or multicast channel. Further, the negotiation component **208** can present determined and/or identified capabilities and/or identity associated with the endpoint **104**. Based on the information provided by the negotiation component **208**, the IS **102** (FIG. **1**) can determine if the endpoint **104** should be allowed to join the VTG and also determine if the endpoint should be directly connected to the VTG or should be connected via a proxy based in part on the system's **100** (FIG. **1**) floor control policy. Furthermore, the IS **102** (FIG. **1**) can determine if the endpoint **104** adheres to the rules of transmission. If the endpoint **104** does not adhere to rules of transmission, it can be dynamically connected to the VTG via a proxy to prevent transmitting media into an active VTG that already has multiple talkers streaming media into it, and thus rendering the VTG useless. In an example embodiment, if the endpoint **104** is admitted into a VTG without proper credentials, it can be continuously monitored by other endpoints for its adherence with system's floor control policy. If another endpoint identifies the monitored endpoint as non-conforming with the floor control policy of the system, the IS **102** (FIG. **1**) can dynamically insert a proxy between the endpoint **104** and the VTG. In addition, the parameters of the VTG can be dynamically altered to conceal the VTG from the identified endpoint and prevent it from streaming into the VTG.

As an example, the endpoint **104** can be an IP phone in accordance with an embodiment of the specification. The IP phone can initiate a communication with another endpoint, such as a cellular phone that is part of a VTG. The information determination component **202** can identify the capabilities associated with the IP phone, such as, built in media termination, multicast stack support, Extensible Markup Language (XML) services. Further, the information determination component **202** can determine that the IP phone does not support RCTP. The negotiation component **208** can negotiate a session with the IS (FIG. **1**) over a private unicast/multicast channel and can present the identity and capability of the IP phone to the IS FIG. **1**) over the private channel employing custom messages. The IS (FIG. **1**) can then proxy for the IP phone since the IP phone does not support RTCP. The IP phone can transfer traffic over the private channel to the IS (FIG. **1**), which can stream the traffic to the VTP and vice versa. Alternately or in addition, the information determination component **202** can determine that the IP phone does not

adhere to the limit of a specified number of multicast streams per VTG and the IS FIG. **1**) can connect the IP phone to the VTG via a proxy. Since the proxy is a trusted component, the proxy can refrain from streaming media into a VTG which already has a maximum number of active media streams as specified by the specific rules of transmission.

FIG. **3** illustrates an example IS **102** in accordance with embodiment of the specification. The IS **102** can be employed to facilitate communication between different non-compatible communication devices. Additionally, the IS **102** can be employed to assess security risks associated with a particular endpoint and also be employed to optimize system resources during communication sessions.

In an embodiment, the IS **102** can include an information collection component **302** that can determine information regarding an endpoint that has initiated a communication session. The information collection component **302** can collect information from the endpoint through custom messages over a private channel. The information can include, but is not limited to, media capabilities of the endpoint, the identity of the endpoint and/or attributes of the endpoint.

The IS **102** can further include a resource determination component **304** that can determine available system resources, e.g. bandwidth, and/or memory. The system resource information can be employed to optimize resource utilization, for example, by load sharing. The resource determination component **304** can dynamically update the system resource information, such that the IS **102** has up-to-date information regarding the availability of system resources. The information regarding the available system resources can be employed to negotiate the dynamic utilization of a proxy for a particular endpoint and establish a communication path based on the resource information and/or the capability information.

The information collected by the information collection component **302** and the information determined by resource determination component **304** can be analyzed by an analysis component **306**. The analysis component **306** can determine if the endpoint can provide the quality of service required in the VTG based on the analysis of the capabilities of the endpoint. In one embodiment, the analysis component **306** can detect an endpoint which may not adhere to the rules of transmission based on collected information. In one embodiment, the analysis component **306** can analyze the information to decide if the requesting endpoint can be allowed to join the VTG and further determine if the endpoint can join the VTG directly.

The analysis component **306** can validate the endpoint identity as secured and/or trusted and determine if the requesting endpoint is a trusted endpoint or potentially a rouge endpoint. It can be appreciated that the analysis component **306** can also identify a malicious endpoint by validating the endpoint identity as malicious. If the requesting endpoint is identified as malicious, the analysis component **306** can reject the request for communication from the endpoint. Further, the analysis component **306** can determine if a non malicious endpoint can join a VTG directly.

The analysis component **306** can analyze the capabilities of the endpoint (determined by the information collecting component **302**) to determine if the endpoint should be connected via a proxy. If the capabilities are analyzed to be non-conforming to the IS **102**, a dynamic proxy component **308** is employed to proxy the endpoint. It can be appreciated that the dynamic proxy component **308** and the IS **102** can reside on the same or on different servers. Logically, the IS **102** can facilitate the creation and maintenance of the VTG as it is responsible for the control signals and the dynamic proxy component **308** can deal with a media component (not shown). Thus, although the dynamic proxy component **308** is depicted as a part of the IS **102**, it can be appreciated that the dynamic proxy component can reside on a separate server. In one embodiment, the IS **102** can be attached to network **106** (or **108**) while the dynamic proxy may be attached to another network **108** (or **106**).

If the analyzed capabilities conform to the IS, the endpoint can be allowed to directly join the VTG. As an example, if the analysis component **306** determines that the requesting endpoint does not support RTCP, the IS **102** can proxy the endpoint. In an embodiment, if the analyzed capabilities cannot confirm that the endpoint would prevent media streaming into a multicast address, which already has a maximum number of active media streams, the IS **102** can connect the endpoint via a dynamic proxy. Furthermore, the analysis component **306** dynamically determines if a proxy can be utilized based on the system resource information provided by the resource determination component **304**. The analysis component **306** can additionally employ machine learning to facilitate automating one or more features in accordance with the subject specification.

The subject specification (e.g., in connection with validation of an endpoint to join a VTG) can employ various AI-based schemes for carrying out various embodiments thereof. For example, a process for determining if an endpoint can directly join a VTG can be facilitated via an automatic classifier system and process. Moreover, where the endpoint requests to join a particular VTG, the classifier can be employed to determine if the endpoint can be allowed to join the VTG and/or the endpoint can be allowed to join the VTG directly.

A classifier is a function that maps an input attribute vector, x=(x1, x2, x3, x4, xn), to a confidence that the input belongs to a class, that is, f(x)=confidence(class). Such classification can employ a probabilistic and/or statistical-based analysis (e.g., factoring into the analysis utilities and costs) to prognose or infer an action that a user desires to be automatically performed. In the case of interoperability systems, for example, attributes can be capabilities and/or identity of the endpoint or other data-specific attributes derived from the capabilities and/or identity, and the classes can be categories or areas of interest. In one example embodiment, the classification is made base on the sub-network to which the endpoint is attached.

A support vector machine (SVM) is an example of a classifier that can be employed. The SVM operates by finding a hypersurface in the space of possible inputs, which the hypersurface attempts to split the triggering criteria from the non-triggering events. Intuitively, this makes the classification correct for testing data that is near, but not identical to training data. Other directed and undirected model classification approaches include, e.g., naïve Bayes, Bayesian networks, decision trees, neural networks, fuzzy logic models, and probabilistic classification models providing different patterns of independence can be employed. Classification as used herein also is inclusive of statistical regression that is utilized to develop models of priority.

As will be readily appreciated from the subject specification, the subject specification can employ classifiers that are explicitly trained (e.g., via a generic training data) as well as implicitly trained (e.g., via observing user behavior, receiving extrinsic information). For example, SVM's are configured via a learning or training phase within a classifier constructor and feature selection module. Thus, the classifier(s) can be used to automatically learn and perform a number of functions, including but not limited to determining according to a

predetermined criteria. Referring back to FIG. **3**, the IS **102** can include a dynamic proxy component **308** that can be dynamically employed to proxy the endpoint based on the analysis performed by the analysis component **306**. The dynamic proxy component **308** can communicate with the endpoint through a private session and join the VTG on behalf of the endpoint. Thus, the dynamic proxy component **308** can establish a communication path based on capability negotiation. The dynamic proxy component **308** can behave as a fully-compliant endpoint and relay relevant information and/or features to the endpoint for which it serves as a proxy through custom messaging. Additionally, the dynamic proxy component **308** can provide talk group features, such as, but not limited to, floor control, talker-id, priority and/or pre-emption on behalf of the endpoint. In one embodiment, if the endpoint is admitted into a VTG without proper credentials, it can be continuously monitored by other endpoints for its adherence with system's floor control policy. If another endpoint identifies that the monitored endpoint as non-conforming with the floor control policy of the system, the dynamic proxy component **308** can dynamically insert a proxy between the endpoint **104** and the VTG.

As an example, if an IP phone initiated a connection to a specific VTG, the information collection component **302** can collect information regarding the IP phone and determine that the IP phone cannot offer full featured RTCP support, talker-id, priority or pre-emption features. The analysis component **306** can determine that the IP phone should be connected to the VTG via a proxy based in part on the information associated with system resources. The dynamic proxy component **308** can then join the intended VTG on behalf of the IP phone. The audio traffic from the IP phone can be received by the dynamic proxy component **308** over a private channel and can be streamed to the intended VTG and vice versa. The dynamic proxy component **308** can preempt the IP phone and prevent the media stream from the IP phone to be streamed into the VTG based on an analysis by the IS **102**.

Referring now to FIG. **4**, there is illustrated an example system **400** that facilitates collection of information associated with an endpoint that initiates a communication session. The example information collection component **302** depicted in the system can be employed to gather, identify and/or determine information advertised by an endpoint. The information collection component **302** can generally include a capability collection component **402** that can be employed to determine information regarding media capabilities of a requesting endpoint. The media capabilities can include behavioral characteristics, such as, but are not limited to, RTCP support, the ability to detect that other members of the VTG are speaking and consequently not streaming media into the said VTG, active stream selection, and/or talk group features. The system **400** can dynamically employ a proxy for the endpoint if the capabilities of the said endpoint are determined to be non-conforming to IS standards.

The information collection component **302** can also include an identity collection component **404** that can be employed to determine the identity of the requesting endpoint. The identity of the endpoint can be employed to validate the security of the endpoint. Further, an attribute collection component **406** can collect attributes associated with the endpoint from the packets sent by the endpoint. If the identity of the endpoint is not determined, the information from the attributes can be utilized to verify the security of the endpoint. As an example, the attribute can include security credentials of the endpoint.

FIG. **5** illustrates an example system **500** that can dynamically determine where media processing can be performed in an interoperability system. The system **500** can include an IS **102** that can facilitate communication between communication devices that employ non-compatible technologies for communication. For example, user **1** and user **2** can employ two-way radios while user **3** can employ a handheld device, such as a cellular phone. It can be appreciated that user **1**, user **2** and user **3** can employ most any communication device including, but not limited to, a telephone, a mobile phone, a PMC, an IP phone, a PDA, a fax machine, a PC, a camera, a video camera, a LMR or a combination thereof. Furthermore, it can be appreciated that although only three users are illustrated in the figure, two or more users can employ the disclosed system.

As an example, a scenario wherein user **3** from domain **2** wants to communicate with two users from domain **1** (user **1** and user **2**) can be described with respect to FIG. **5**. The user **3** can initiate communication through a hand held device, such as an IP phone. The users in domain **1** employ different standards for communication as the user in domain **2**. When a user joins a VTG, the location and resources on an endpoint employed by the user are considered. During communication, user **1** and user **2** from domain **1** can stream media from domain **1** to domain **2** . This can be achieved in two ways, namely, transfer the two media streams from domain **1** to domain **2** & mix them in the endpoint (e.g. IP phone) or utilize a proxy in domain **1** that can process the media streams in domain **1** and transfer a single media stream to domain **2**. The IS **102** can determine the location where media processing can occur, for example, by an analysis component **306** (FIG. **3**). The IS **102** determines the available system resources (e.g. by a resource determination component shown in FIG. **3**) and capabilities of the devices employed by the users (e.g. by an information collection component shown in FIG. **3**) to determine an optimal location for media processing. For example, if current available bandwidth is low, the IS **102** can utilize a proxy to process the media streams from user **1** and user **2** in domain **1** and transfer a single media stream to user **3** in domain **2**. Furthermore, the dynamic proxy component **308** (FIG. **3**), in the IS **102**, can monitor the IP multicast address/port and determine if there are other active media streams on the multicast address. If the analysis component **306** (FIG. **3**), in the IS **102**, detects more than a maximum specified number of active media steams on the multicast address, the dynamic proxy component **308** (FIG. **3**) can back up and refrain from transmitting media to the multicast address. If user **3** does not adhere to the specified transmission rule, it can transmit media into an already busy VTG. The analysis component **306**(FIG. **3**) can check if user **3** has the capability to adhere to the specified rule. If the IS **102** cannot ensure that the user **3** would adhere to the said rule, the IS **102** can connect the user **3** to the VTG via a proxy. Since the proxy is a trusted component, it would refrain from streaming media into an active VTG which already has a maximum number of active media streams.

Referring now to FIG. **6**, there is illustrated an example system **600** that can be employed to communicate with an interoperability system. In an embodiment, the system **600** can include most any device or system, such as, endpoint **104** that can be employed for communication. The endpoint **104** can support half duplex and/or full duplex communication.

The endpoint **104** can generally include a user interface **602** that can be employed by an entity, such as a user to initiate or receive communication. The user interface can include a speaker, a microphone, a visual display, a keypad or a combination thereof. The keypad may include HW buttons and/or menu driven soft buttons. The endpoint **104** can further include a processor **604** that can perform operations within

the endpoint **104** and a memory **606** that can store information within the endpoint **104**. Furthermore, the endpoint **104** can include an information determination component **202** that can be employed to identify information associated with the endpoint **104**, such as capability information and/or identity information. A negotiation component **208** can be employed to exchange capability information with an interoperability server (not shown) during communication. It is to be appreciated that information determination component **202** and negotiation component **208** can be the same or similar as, and/or can contain the same or similar functionality as illustrated in FIG. **2** and other figures and described herein.

A transmitter/receiver **608** can be employed to transmit and receive data from/to the endpoint **104**. It can be appreciated that the transmitter and receiver can be separate modules or integrated as a single module. The transmitter/receiver **608** can transmit information determined by the information collection component **202** to an interoperability server (not shown) over a private channel to initiate communication. The transmitter/receiver **608** can employ wireless and/or wired communication to transmit/receive information.

FIG. **7** illustrates an example methodology **700** that can facilitate dynamic communication between non-compatible communication devices in accordance with embodiment of the specification. While, for purposes of simplicity of explanation, the one or more methodologies shown herein, e.g., in the form of a flow chart, are shown and described as a series of acts, it is to be understood and appreciated that the subject specification is not limited by the order of acts, as some acts may, in accordance with the specification, occur in a different order and/or concurrently with other acts from that shown and described herein. For example, those skilled in the art will understand and appreciate that a methodology could alternatively be represented as a series of interrelated states or events, such as in a state diagram. Moreover, not all illustrated acts may be required to implement a methodology in accordance with the specification.

Referring back to FIG. **7**, a communication between devices can be initiated at **702**. The devices can employ non-compatible technologies and/or standards for communication. At **704**, media capabilities and/or identity of the device that initiated communication can be advertised. At **706**, a decision can be made if the device is allowed to join a VTG based on its identity. If the device identity is determined to be untrusted or malicious the device cannot be allowed to join the VTG and the request can be rejected at **708**. If the device identity is determined to be trusted or safe, it can be determined if the device should join via proxy, as shown at **710**. The determination at **710** can be based on the media capabilities of the device and the available system resources. If it is determined that the device does not need to join via proxy since the device can adhere to the behavioral characteristics of an interoperability system, such as but not limited to, transmission rules, the device can be directly connected to the VTG, as shown at **712**. However, if the device demonstrates that it cannot comply with the behavioral characteristics of the interoperability system, the device can be attached to a VTG via a proxy. In one embodiment, if it cannot be determined that the endpoint can adhere to specified rules of transmission, the endpoint can be connected to the VTG via a proxy. At **714**, a dynamic proxy can be employed for attaching the endpoint device to the VTG. In one embodiment, if the endpoint is admitted into a VTG without proper credentials, it can be monitored for its adherence with a floor control policy, such as a specified rule of transmission. If it is identified that the monitored endpoint is non-conforming with the floor control policy, a proxy can dynamically be inserted between the endpoint and the VTG.

At **716**, a dynamic path can be established for communication from the endpoint device to the dynamic proxy and the proxy to the intended device in the VTG. The dynamic path can be based on the available system resources, such as, but not limited to, memory and/or bandwidth.

Referring now to FIG. **8**, there is illustrated an example methodology **800** of communicating with a device in an interoperability communication system via a dynamic media proxy in accordance with the specification. At **802**, communication with a non-compatible communication device(s) can be initiated. At **804**, media capability information associated with the initiating device can be determined. At **806**, an identity of the initiating device can be determined. At **808**, it can be determined if a proxy is employed to attach the initiating device to the given VTG. If a proxy is not employed to attach the endpoint device to the given VTG, media can be transmitted directly to a VTG at **810**. Thus, the initiating device can directly communicate with an indented device in the VTG. If it is determined that the proxy is employed to attach the endpoint device to the given VTG, media can be transmitted to the proxy over a private network through custom messages at **812**.

FIG. **9** illustrates an example methodology of utilizing a dynamic media proxy in accordance with the specification. At **902**, a communication request can be received. The request can be from most any endpoint (e.g. PTT radio) to initiate communication with another endpoint (e.g. cellular phone). At **904**, information associated with the requesting endpoint can be dynamically determined. The information can include, but is not limited to, media capabilities, device identity attributes associated with the device and/or the device's capability to adhere to a specified transmission rule. At **906**, system resource information, such as, but not limited to, bandwidth, memory and/or number of active media streams can be collected. At **908**, the collected information can be analyzed. At **910** a dynamic media proxy can be utilized to facilitate communication between non-compatible communication devices based on the collected information. In one embodiment, the VTG can be monitored for number of active media streams and media transmission between the endpoint can be established via a proxy if a maximum number of active media streams are detected and it is determined that the endpoints do not adhere to the transmission rule.

Referring now to FIG. **10**, there is illustrated a block diagram of a computer operable to execute the disclosed architecture that can be employed to join various non-compatible communications systems into a cohesive infrastructure by employing a dynamic media proxy based on capability negotiation. In order to provide additional context for various embodiments of the subject specification, FIG. **10** and the following discussion are intended to provide a brief, general description of a suitable computing environment **1000** in which the various embodiments of the specification can be implemented. While the specification has been described above in the general context of computer-executable instructions that may run on one or more computers, those skilled in the art will recognize that the specification also can be implemented in combination with other program modules and/or as a combination of hardware and software.

Generally, program modules include routines, programs, components, data structures, etc., that perform particular tasks or implement particular abstract data types. Moreover, those skilled in the art will appreciate that the inventive methods can be practiced with other computer system configura-

tions, including single-processor or multiprocessor computer systems, minicomputers, mainframe computers, as well as personal computers, hand-held computing devices, microprocessor-based or programmable consumer electronics, and the like, each of which can be operatively coupled to one or more associated devices.

The illustrated embodiments of the specification may also be practiced in distributed computing environments where certain tasks are performed by remote processing devices that are linked through a communications network. In a distributed computing environment, program modules can be located in both local and remote memory storage devices.

A computer includes a variety of computer-readable media. Computer-readable media can be any available media that can be accessed by the computer and includes both volatile and nonvolatile media, removable and non-removable media. By way of example, and not limitation, computer-readable media can comprise computer storage media and communication media. Computer storage media includes both volatile and nonvolatile, removable and non-removable media implemented in any method or technology for storage of information such as computer-readable instructions, data structures, program modules or other data. Computer storage media includes, but is not limited to, RAM, ROM, EEPROM, flash memory or other memory technology, CD-ROM, digital versatile disk (DVD) or other optical disk storage, magnetic cassettes, magnetic tape, magnetic disk storage or other magnetic storage devices, or any other medium which can be used to store the desired information and which can be accessed by the computer.

Communication media embodies computer-readable instructions, data structures, program modules or other data in a modulated data signal such as a carrier wave or other transport mechanism, and includes any information delivery media. The term "modulated data signal" means a signal that has one or more of its characteristics set or changed in such a manner as to encode information in the signal. By way of example, and not limitation, communication media includes wired media such as a wired network or direct-wired connection, and wireless media such as acoustic, RF, infrared and other wireless media. Combinations of the any of the above should also be included within the scope of computer-readable media.

With reference again to FIG. **10**, the example environment **1000** for implementing various embodiments of the specification includes a computer **1002**, the computer **1002** including a processing unit **1004**, a system memory **1006** and a system bus **1008**. The system bus **1008** couples system components including, but not limited to, the system memory **1006** to the processing unit **1004**. The processing unit **1004** can be any of various commercially available processors. Dual microprocessors and other multi-processor architectures may also be employed as the processing unit **1004**. In some embodiments, the processor unit **1004** can include a digital signal processor (DSP).

The system bus **1008** can be any of several types of bus structure that may further interconnect to a memory bus (with or without a memory controller), a peripheral bus, and a local bus using any of a variety of commercially available bus architectures. In some embodiments, the bus can be a fast network resulting in a distributed components attached to the network. The system memory **1006** includes read-only memory (ROM) **1010** and random access memory (RAM) **1012**. A basic input/output system (BIOS) is stored in a non-volatile memory **1010** such as ROM, EPROM, EEPROM, which BIOS contains the basic routines that help to transfer information between elements within the computer **1002**, such as during start-up. The RAM **1012** can also include a high-speed RAM such as static RAM for caching data.

The computer **1002** further includes an internal hard disk drive (HDD) **1014** (e.g., EIDE, SATA), which internal hard disk drive **1014** may also be configured for external use in a suitable chassis (not shown), a magnetic floppy disk drive (FDD) **1016**, (e.g., to read from or write to a removable diskette **1018**) and an optical disk drive **1020**, (e.g., reading a CD-ROM disk **1022** or, to read from or write to other high capacity optical media such as the DVD). The hard disk drive **1014**, magnetic disk drive **1016** and optical disk drive **1020** can be connected to the system bus **1008** by a hard disk drive interface **1024**, a magnetic disk drive interface **1026** and an optical drive interface **1028**, respectively. The interface **1024** for external drive implementations includes at least one or both of Universal Serial Bus (USB) and IEEE 1394 interface technologies. Other external drive connection technologies are within contemplation of the subject specification.

The drives and their associated computer-readable media provide nonvolatile storage of data, data structures, computer-executable instructions, and so forth. For the computer **1002**, the drives and media accommodate the storage of any data in a suitable digital format. Although the description of computer-readable media above refers to a HDD, a removable magnetic diskette, and a removable optical media such as a CD or DVD, it should be appreciated by those skilled in the art that other types of media which are readable by a computer, such as zip drives, magnetic cassettes, flash memory cards, cartridges, and the like, may also be used in the example operating environment, and further, that any such media may contain computer-executable instructions for performing the methods of the specification.

A number of program modules can be stored in the drives and RAM **1012**, including an operating system **1030**, one or more application programs **1032**, other program modules **1034** and program data **1036**. All or portions of the operating system, applications, modules, and/or data can also be cached in the RAM **1012**. It is appreciated that the specification can be implemented with various commercially available operating systems or combinations of operating systems.

A user can enter commands and information into the computer **1002** through one or more wired/wireless input devices, e.g., a keyboard **1038** and a pointing device, such as a mouse **1040**. Other input devices (not shown) may include a microphone, an IR remote control, a joystick, a game pad, a stylus pen, touch screen, or the like. These and other input devices are often connected to the processing unit **1004** through an input device interface **1042** that is coupled to the system bus **1008**, but can be connected by other interfaces, such as a parallel port, an IEEE 1394 serial port, a game port, a USB port, an IR interface, etc.

A monitor **1044** or other type of display device is also connected to the system bus **1008** via an interface, such as a video adapter **1046**. In addition to the monitor **1044**, a computer includes other peripheral output devices (not shown), such as speakers, printers, etc.

The computer **1002** may operate in a networked environment using logical connections via wired and/or wireless communications to one or more remote computers, such as a remote computer(s) **1048**. The remote computer(s) **1048** can be a workstation, a server computer, a router, a personal computer, endpoint device, portable computer, microprocessor-based entertainment appliance, a peer device or other common network node, and includes many or all of the elements described relative to the computer **1002**, although, for purposes of brevity, only a memory/storage device **1050** is illustrated. The logical connections depicted include wired/

wireless connectivity to a local area network (LAN) **1052** and/or larger networks, e.g., a wide area network (WAN) **1054**. Such LAN and WAN networking environments are commonplace in offices and companies, and facilitate enterprise-wide computer networks, such as intranets, all of which may connect to a global communications network, e.g., the Internet.

When used in a LAN networking environment, the computer **1002** is connected to the local network **1052** through a wired and/or wireless communication network interface or adapter **1056**. The adapter **1056** may facilitate wired or wireless communication to the LAN **1052**, which may also include a wireless access point disposed thereon for communicating with the wireless adapter **1056**.

When used in a WAN networking environment, the computer **1002** can include a modem **1058**, or is connected to a communications server on the WAN **1054**, or has other means for establishing communications over the WAN **1054**, such as by way of the Internet. The modem **1058**, which can be internal or external and a wired or wireless device, is connected to the system bus **1008** via the serial port interface **1042**. In a networked environment, program modules depicted relative to the computer **1002**, or portions thereof, can be stored in the remote memory/storage device **1050**. It will be appreciated that the network connections shown are example and other means of establishing a communications link between the computers can be used.

The computer **1002** is operable to communicate with any wireless devices or entities operatively disposed in wireless communication, e.g., a printer, scanner, desktop and/or portable computer, portable data assistant, communications satellite, any piece of equipment or location associated with a wirelessly detectable tag (e.g., a kiosk, news stand, restroom), and telephone. This includes at least Wi-Fi and Bluetooth™ wireless technologies. Thus, the communication can be a predefined structure as with a conventional network or simply an ad hoc communication between at least two devices.

Wi-Fi, or Wireless Fidelity, allows connection to the Internet from a couch at home, a bed in a hotel room, or a conference room at work, without wires. Wi-Fi is a wireless technology similar to that used in a cell phone that enables such devices, e.g., computers, to send and receive data indoors and out; anywhere within the range of a base station. Wi-Fi networks use radio technologies called IEEE 802.11 (a, b, g, etc.) to provide secure, reliable, fast wireless connectivity. A Wi-Fi network can be used to connect computers to each other, to the Internet, and to wired networks (which use IEEE 802.3 or Ethernet). Wi-Fi networks operate in the unlicensed 2.4 and 5 GHz radio bands, at an 11 Mbps (802.11a) or 54 Mbps (802.11b) data rate, for example, or with products that contain both bands (dual band), so the networks can provide real-world performance similar to the basic 10BaseT wired Ethernet networks used in many offices.

Referring now to FIG. **11**, there is illustrated a schematic block diagram of an exemplary computing environment **1100** that can facilitate communication between non-compatible communication devices in accordance with embodiment of the specification. The system **1100** includes one or more client(s) **1102**. The client(s) **1102** can be hardware and/or software (e.g., threads, processes, computing devices). The client(s) **1102** can house cookie(s) and/or associated contextual information by employing the subject specification, for example.

The system **1100** also includes one or more server(s) **1104**. The server(s) **1104** can also be hardware and/or software (e.g., threads, processes, computing devices). The servers **1104** can house threads to perform transformations by employing the specification, for example. One possible communication between a client **1102** and a server **1104** can be in the form of a data packet adapted to be transmitted between two or more computer processes. The data packet may include a cookie and/or associated contextual information, for example. The system **1100** includes a communication framework **1106** (e.g., a global communication network such as the Internet) that can be employed to facilitate communications between the client(s) **1102** and the server(s) **1104**.

Communications can be facilitated via a wired (including optical fiber) and/or wireless technology. The client(s) **1102** are operatively connected to one or more client data store(s) **1108** that can be employed to store information local to the client(s) **1102** (e.g., cookie(s) and/or associated contextual information). Similarly, the server(s) **1104** are operatively connected to one or more server data store(s) **1110** that can be employed to store information local to the servers **1104**.

The aforementioned systems have been described with respect to interaction between several components. It should be appreciated that such systems and components can include those components or sub-components specified therein, some of the specified components or sub-components, and/or additional components. Sub-components could also be implemented as components communicatively coupled to other components rather than included within parent components. Further yet, one or more components and/or sub-components may be combined into a single component providing aggregate functionality. The components may also interact with one or more other components not specifically described herein for the sake of brevity, but known by those of skill in the art.

What has been described above includes examples of the specification. It is, of course, not possible to describe every conceivable combination of components or methodologies for purposes of describing the subject specification, but one of ordinary skill in the art may recognize that many further combinations and permutations of the specification are possible. Accordingly, the specification is intended to embrace all such alterations, modifications and variations that fall within the spirit and scope of the appended claims. Furthermore, to the extent that the term "includes" is used in either the detailed description or the claims, such term is intended to be inclusive in a manner similar to the term "comprising" as "comprising" is interpreted when employed as a transitional word in a claim.

What is claimed is:

1. An apparatus comprising a processor, wherein the processor is configured to:

identify information related to an endpoint to obtain identified information; and

negotiate a communication session with an interoperability server (IS) based in part on at least one of the identified information or a predefined floor control mechanism associated with the IS; and

receive a first determination from the IS that the endpoint is not in adherence with capabilities of the predefined floor control mechanism and that a proxy is to be dynamically inserted to connect the endpoint to a virtual talk group, wherein the capabilities comprise quality of service, rules of transmission and trusted endpoint identity.

2. The apparatus of claim **1**, wherein the processor is further configured to identify media capabilities associated with the endpoint, the media capabilities employed by the IS to dynamically determine if the endpoint should be connected to the virtual talk group via the proxy.

3. The apparatus of claim **2**, further comprising a transmitter, wherein the transmitter transmits data to the virtual talk

group if it is determined that the proxy is not employed to connect the endpoint to the virtual talk group.

4. The apparatus of claim **2**, further comprising a transmitter, wherein the transmitter transmits data to the proxy over a private channel if it is determined that the proxy is employed to connect the endpoint to the virtual talk group.

5. The apparatus of claim **1**, wherein the processor is further configured to determine an identity associated with the endpoint, the identity employed by the IS to dynamically determine if the endpoint should be connected to the virtual talk group via the proxy.

6. The apparatus of claim **1**, wherein the processor is configured to:

receive a second determination from the IS to connect the endpoint directly to the virtual talk group without the proxy when the endpoint is conforming with the capabilities, and

connect the endpoint to the virtual talk group in response to receiving one of the first determination or the second determination.

7. The apparatus of claim **1**, wherein the processor is further configured to monitor endpoints directly connected to the virtual talk group and determines that a directly connected endpoint is not conforming with a floor control policy of the virtual talk group.

8. A method comprising:

initiating communication with a non-compatible communication device;

identifying information associated with an initiating device; and

negotiating a communication session with an interoperability server (IS) based in part on at least one of the identified information or a predefined floor control mechanism associated with the IS; and

receiving a first determination from the IS that the initiating device is not in adherence with capabilities of the predefined floor control mechanism and that a proxy is to be dynamically inserted to connect the initiating device to a virtual talk group, wherein the capabilities comprise quality of service, rules of transmission and trusted endpoint identity.

9. The method of claim **8**, wherein the information associated with the initiating device includes at least one of media capability information associated with the initiating device or an identity of the initiating device.

10. The method of claim **8**, further comprising transmitting media to the proxy over a private network through custom messages if it is evaluated that the proxy is employed.

11. The method of claim **8**, further comprising, attaching the initiating device directly to the virtual talk group and transmitting media directly to the virtual talk group if the proxy is not employed to attach the initiating device to the virtual talk group.

12. An endpoint comprising:

a transmitter and a receiver;

a user interface;

a processor coupled to the user interface, wherein the processor:

identifies information related to the endpoint; and

negotiates a communication session with an interoperability server based in part on at least one of the identified information or a predefined floor control mechanism associated with the interoperability server; and

receive a first determination from the interoperability server that the endpoint is not in adherence with capabilities of the predefined floor control mechanism and that a proxy is to be dynamically inserted to connect the endpoint to a virtual talk group, wherein the capabilities comprise quality of service, rules of transmission and trusted endpoint identity.

13. The endpoint of claim **12**, wherein the processor identifies media capabilities associated with the endpoint, the media capabilities employed by the interoperability server to dynamically determine if the endpoint should be connected to the virtual talk group via the proxy.

14. The endpoint of claim **12**, wherein the processor determines an identity associated with the endpoint, the identity employed by the interoperability server to dynamically determine if the endpoint should be connected to a virtual talk group via the proxy.

15. The endpoint of claim **12**, wherein the processor causes the transmitter to transmit data to the virtual talk group if it is determined that the proxy is not employed to connect the endpoint to the virtual talk group.

16. The endpoint of claim **12**, wherein the processor causes the transmitter to transmit data to the proxy over a private channel if it is determined that the proxy is employed to connect the endpoint to the virtual talk group.

17. A non-transitory computer readable storage media comprising instructions that, when executed by a processor, cause the processor to perform operations comprising:

initiating communication with a non-compatible communication device;

identifying information associated with an initiating device; and

negotiating a communication session with an interoperability server based in part on at least one of the identified information or a predefined floor control mechanism associated with the interoperability server; and

receiving a first determination from the IS that the initiating device is not in adherence with capabilities of the predefined floor control mechanism and that a proxy is to be dynamically inserted to connect the initiating device to a virtual talk group, wherein the capabilities comprise quality of service, rules of transmission and trusted endpoint identity.

18. The non-transitory computer readable storage media of claim **17**, wherein the information associated with the initiating device includes at least one of media capability information associated with the initiating device or an identity of the initiating device.

19. The non-transitory computer readable storage media of claim **18**, further comprising instructions operable to cause the processor to transmit media to the proxy over a private network through messages if it is evaluated that the proxy is employed.

20. The non-transitory computer readable storage media of claim **18**, further comprising instructions operable to cause the processor to connect the initiating device directly to the virtual talk group and to transmit media directly to the virtual talk group if the proxy is not employed to attach the initiating device to the virtual talk group.

* * * * *