US011470138B2

(12) **United States Patent**
Brueck et al.

(10) **Patent No.: US 11,470,138 B2**
(45) **Date of Patent: *Oct. 11, 2022**

(54) **APPARATUS, SYSTEM, AND METHOD FOR MULTI-BITRATE CONTENT STREAMING**

(71) Applicant: **DISH Technologies L.L.C.**, Englewood, CO (US)

(72) Inventors: **David F. Brueck**, Saratoga Springs, UT (US); **Mark B. Hurst**, Cedar Hills, UT (US); **R. Drew Major**, Orem, UT (US)

(73) Assignee: **DISH Technologies L.L.C.**, Englewood, CO (US)

(*) Notice: Subject to any disclaimer, the term of this patent is extended or adjusted under 35 U.S.C. 154(b) by 0 days.

This patent is subject to a terminal disclaimer.

(21) Appl. No.: **16/876,579**

(22) Filed: **May 18, 2020**

(65) **Prior Publication Data**

US 2020/0280594 A1 Sep. 3, 2020

Related U.S. Application Data

(63) Continuation of application No. 16/004,056, filed on Jun. 8, 2018, now Pat. No. 10,659,513, which is a

(Continued)

(51) **Int. Cl.**
H04L 29/06 (2006.01)
H04L 65/70 (2022.01)

(Continued)

(52) **U.S. Cl.**
CPC ***H04L 65/70*** (2022.05); ***G06F 16/183*** (2019.01); ***G06F 16/71*** (2019.01); ***H04L 47/12*** (2013.01);

(Continued)

(58) **Field of Classification Search**
CPC H04N 21/2662; H04N 21/8456; H04L 65/607; H04L 65/608; H04L 67/02
See application file for complete search history.

(56) **References Cited**

U.S. PATENT DOCUMENTS

4,535,355 A 8/1985 Arn et al.
5,168,356 A 12/1992 Acampora et al.

(Continued)

FOREIGN PATENT DOCUMENTS

CA 2466482 A1 5/2003
EP 0365683 A1 5/1990

(Continued)

OTHER PUBLICATIONS

Krasic et al., Quality-Adaptive Media Streaming by Priority Drop, Oregon Graduate Institute, 2001.

(Continued)

Primary Examiner — Chirag R Patel
(74) *Attorney, Agent, or Firm* — KW Law, LLP

(57) **ABSTRACT**

An apparatus for multi-bitrate content streaming includes a receiving module configured to capture media content, a streamlet module configured to segment the media content and generate a plurality of streamlets, and an encoding module configured to generate a set of streamlets. The system includes the apparatus, wherein the set of streamlets comprises a plurality of streamlets having identical time indices and durations, and each streamlet of the set of streamlets having a unique bitrate, and wherein the encoding module comprises a master module configured to assign an encoding job to one of a plurality of host computing modules in response to an encoding job completion bid. A method includes receiving media content, segmenting the media content and generating a plurality of streamlets, and generating a set of streamlets.

30 Claims, 11 Drawing Sheets

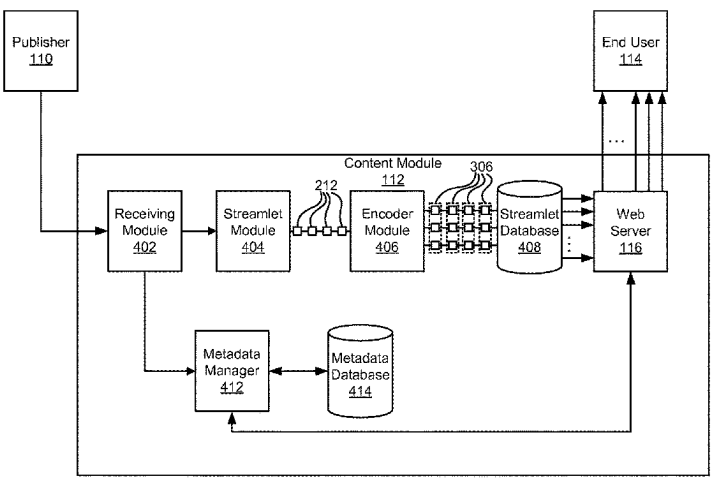

Related U.S. Application Data

continuation of application No. 15/414,025, filed on Jan. 24, 2017, now Pat. No. 9,998,516, which is a continuation of application No. 14/719,122, filed on May 21, 2015, now Pat. No. 9,571,551, which is a continuation of application No. 14/106,051, filed on Dec. 13, 2013, now Pat. No. 9,071,668, which is a continuation of application No. 13/617,114, filed on Sep. 14, 2012, now Pat. No. 8,612,624, which is a continuation of application No. 12/906,940, filed on Oct. 18, 2010, now Pat. No. 8,402,156, which is a continuation of application No. 11/673,483, filed on Feb. 9, 2007, now Pat. No. 7,818,444, which is a continuation-in-part of application No. 11/116,783, filed on Apr. 28, 2005, now Pat. No. 8,868,772.

(60) Provisional application No. 60/566,831, filed on Apr. 30, 2004.

(51) **Int. Cl.**

H04L 47/80	(2022.01)
H04L 47/12	(2022.01)
G06F 16/71	(2019.01)
G06F 16/182	(2019.01)
H04N 7/24	(2011.01)
H04N 21/2343	(2011.01)
H04N 21/433	(2011.01)
H04N 21/84	(2011.01)
H04N 21/845	(2011.01)
H04L 65/80	(2022.01)
H04L 65/61	(2022.01)
H04L 65/65	(2022.01)
H04L 65/1101	(2022.01)
H04L 67/60	(2022.01)
H04L 67/568	(2022.01)
H04L 67/02	(2022.01)
H04L 65/1069	(2022.01)
H04N 21/2662	(2011.01)

(52) **U.S. Cl.**

CPC ***H04L 47/801*** (2013.01); ***H04L 65/1069*** (2013.01); ***H04L 65/1101*** (2022.05); ***H04L 65/61*** (2022.05); ***H04L 65/65*** (2022.05); ***H04L 65/80*** (2013.01); ***H04L 67/02*** (2013.01); ***H04L 67/568*** (2022.05); ***H04L 67/60*** (2022.05); ***H04N 7/24*** (2013.01); ***H04N 21/23439*** (2013.01); ***H04N 21/2662*** (2013.01); ***H04N 21/4331*** (2013.01); ***H04N 21/84*** (2013.01); ***H04N 21/8456*** (2013.01)

(56) **References Cited**

U.S. PATENT DOCUMENTS

5,267,334	A	11/1993	Normille et al.
5,404,446	A	4/1995	Bowater et al.
5,414,455	A	5/1995	Hooper et al.
5,424,455	A	6/1995	Yamamoto et al.
5,544,318	A	8/1996	Schmitz et al.
5,687,095	A	11/1997	Haskell et al.
5,732,183	A	3/1998	Sugiyama
5,768,527	A	6/1998	Zhu et al.
5,841,432	A	11/1998	Carmel et al.
5,867,230	A	2/1999	Wang et al.
5,933,603	A	8/1999	Vahalia et al.
5,941,951	A	8/1999	Day et al.
5,953,506	A	9/1999	Kalra et al.
5,966,015	A	10/1999	Horii
5,966,025	A	10/1999	Beffa
5,996,025	A	11/1999	Day et al.
6,003,030	A	12/1999	Kenner et al.
6,091,775	A	7/2000	Hibi et al.
6,091,777	A	7/2000	Guetz et al.
6,112,239	A	8/2000	Kenner et al.
6,122,660	A	9/2000	Baransky et al.
6,154,744	A	11/2000	Kenner et al.
6,172,672	B1	1/2001	Ramasubramanian et al.
6,181,867	B1	1/2001	Kenner et al.
6,185,736	B1	2/2001	Ueno
6,195,680	B1	2/2001	Goldszmidt et al.
6,292,383	B1	9/2001	Worley
6,292,834	B1	9/2001	Ravi et al.
6,366,614	B1	4/2002	Pian et al.
6,374,289	B2	4/2002	Delaney et al.
6,389,473	B1	5/2002	Carmel et al.
6,449,719	B1	9/2002	Baker
6,486,803	B1	11/2002	Luby et al.
6,490,627	B1	12/2002	Kalra et al.
6,498,897	B1	12/2002	Nelson et al.
6,510,553	B1	1/2003	Hazra
6,574,591	B1	6/2003	Kleiman et al.
6,604,118	B2	8/2003	Klleiman et al.
6,618,752	B1	9/2003	Moore et al.
6,625,643	B1	9/2003	Colby et al.
6,637,031	B1	10/2003	Chou
6,665,726	B1	12/2003	Leighton et al.
6,708,213	B1	3/2004	Bommaiah et al.
6,721,723	B1	4/2004	Gibson et al.
6,731,600	B1	5/2004	Patel et al.
6,757,796	B1	6/2004	Hofmann
6,760,772	B2	7/2004	Zou et al.
6,766,407	B1	7/2004	Lisitsa et al.
6,795,863	B1	9/2004	Doty, Jr.
6,845,107	B1	1/2005	Kitazawa et al.
6,850,965	B2	2/2005	Allen
6,859,839	B1	2/2005	Zahorjan et al.
6,874,015	B2	3/2005	Kaminsky et al.
6,968,387	B2	11/2005	Lanphear
6,976,090	B2	12/2005	Ben-Shaul et al.
7,047,307	B2	5/2006	Li
7,054,365	B2	5/2006	Kim et al.
7,054,774	B2	5/2006	Batterberry et al.
7,054,911	B1	5/2006	Lango et al.
7,075,986	B2	7/2006	Girod et al.
7,093,001	B2	8/2006	Yang et al.
7,096,271	B1	8/2006	Omoigui et al.
7,099,954	B2	8/2006	Li et al.
7,116,894	B1	10/2006	Chatterton
7,174,385	B2	2/2007	Li
7,194,549	B1	3/2007	Lee et al.
7,240,100	B1	7/2007	Wein et al.
7,260,640	B1	8/2007	Kramer et al.
7,274,740	B2	9/2007	van Beek et al.
7,295,520	B2	11/2007	Lee et al.
7,310,678	B2	12/2007	Gunaseelan et al.
7,325,073	B2	1/2008	Shao et al.
7,328,243	B2	2/2008	Yaeger et al.
7,330,908	B2	2/2008	Jungek
7,334,044	B1	2/2008	Allen
7,349,358	B2	3/2008	Hennessey et al.
7,349,976	B1	3/2008	Glaser et al.
7,369,610	B2 *	5/2008	Xu H04N 21/2662 375/240.08
7,376,747	B2	5/2008	Hartop
7,386,627	B1	6/2008	Lango et al.
7,391,717	B2	6/2008	Kiemets et al.
7,408,984	B2	8/2008	Lu et al.
7,412,531	B1	8/2008	Lango et al.
7,477,688	B1	1/2009	Zhang et al.
7,523,181	B2	4/2009	Swildens et al.
7,536,469	B2	5/2009	Chou et al.
7,546,355	B2	6/2009	Kalnitsky
7,558,869	B2	7/2009	Leon et al.
7,577,750	B2	8/2009	Shen et al.
7,593,333	B2	9/2009	Li et al.
7,599,307	B2	10/2009	Seckni et al.
7,609,652	B2	10/2009	Kellerer et al.
7,653,735	B2	1/2010	Mandato et al.
7,707,303	B2	4/2010	Albers et al.

(56) **References Cited**

U.S. PATENT DOCUMENTS

7,719,985 B2 5/2010 Lee et al.
7,760,801 B2 7/2010 Ghanbari et al.
7,779,135 B2 8/2010 Hudson et al.
7,788,395 B2 8/2010 Bowra et al.
7,797,439 B2 9/2010 Cherkasova et al.
7,817,985 B2 10/2010 Moon
7,818,444 B2 10/2010 Brueck et al.
7,925,781 B1 4/2011 Chan et al.
7,974,200 B2 7/2011 Walker et al.
8,036,265 B1 10/2011 Reynolds et al.
8,370,514 B2 2/2013 Hurst et al.
8,402,156 B2 3/2013 Brueck et al.
8,521,836 B2 8/2013 Kewalramani et al.
8,612,624 B2 12/2013 Brueck et al.
8,683,066 B2 3/2014 Hurst et al.
8,686,066 B2 4/2014 Kwampian et al.
8,711,701 B2 4/2014 Ju
8,818,127 B2 8/2014 Hayata et al.
8,868,772 B2 10/2014 Major et al.
8,880,721 B2 11/2014 Hurst et al.
9,344,496 B2 5/2016 Hurst et al.
9,407,564 B2 8/2016 Major et al.
9,462,074 B2 10/2016 Guo et al.
10,469,554 B2 11/2019 Brueck et al.
10,469,555 B2 11/2019 Brueck et al.
10,757,156 B2 8/2020 Major et al.
10,951,680 B2 3/2021 Brueck et al.
2001/0013128 A1 8/2001 Hagai et al.
2001/0047423 A1 11/2001 Shao et al.
2002/0002708 A1 1/2002 Arye
2002/0029274 A1 3/2002 Allen
2002/0044528 A1 4/2002 Pogrebinsky et al.
2002/0073167 A1 6/2002 Powell et al.
2002/0091840 A1 7/2002 Pulier et al.
2002/0097750 A1 7/2002 Gunaseelan et al.
2002/0131496 A1 9/2002 Vasudevan et al.
2002/0144276 A1 10/2002 Radford et al.
2002/0152317 A1 10/2002 Wang et al.
2002/0152318 A1 10/2002 Menon et al.
2002/0156912 A1 10/2002 Hurst et al.
2002/0161898 A1 10/2002 Hartop et al.
2002/0161908 A1 10/2002 Benitez et al.
2002/0161911 A1 10/2002 Pinckney, III et al.
2002/0169926 A1 11/2002 Pinckney, III et al.
2002/0170062 A1 11/2002 Chen et al.
2002/0174434 A1 11/2002 Lee et al.
2002/0176418 A1 11/2002 Hunt et al.
2002/0178330 A1 11/2002 Schlowsky-Fischer et al.
2002/0188745 A1 12/2002 Hughes et al.
2003/0005455 A1 1/2003 Bowers
2003/0009578 A1 1/2003 Apostolopoulos et al.
2003/0014684 A1 1/2003 Kashyap
2003/0018966 A1 1/2003 Cook et al.
2003/0021166 A1 1/2003 Soloff
2003/0021282 A1 1/2003 Hospodor
2003/0055995 A1 3/2003 Honkola
2003/0061305 A1 3/2003 Copley et al.
2003/0065803 A1 4/2003 Heuvelman
2003/0067872 A1 4/2003 Harrell et al.
2003/0067875 A1 4/2003 Yoshida et al.
2003/0072376 A1 4/2003 Krishnamachari et al.
2003/0081582 A1 5/2003 Jain et al.
2003/0093790 A1 5/2003 Logan et al.
2003/0107994 A1 6/2003 Jacobs et al.
2003/0135631 A1 7/2003 Li et al.
2003/0135863 A1 7/2003 VanDer Schaar
2003/0140159 A1 7/2003 Campbell et al.
2003/0151753 A1 8/2003 Li et al.
2003/0152036 A1 8/2003 Quigg Brown et al.
2003/0154239 A1 8/2003 Davis et al.
2003/0195977 A1 10/2003 Liu et al.
2003/0204519 A1 10/2003 Sirivara et al.
2003/0204602 A1 10/2003 Hudson et al.
2003/0233464 A1 12/2003 Walpole et al.
2003/0236904 A1 12/2003 Walpole et al.
2003/0236906 A1 12/2003 Klemets et al.
2004/0003101 A1 1/2004 Roth et al.
2004/0010613 A1 1/2004 Apostolopoulos et al.
2004/0030547 A1 2/2004 Leaning et al.
2004/0030599 A1 2/2004 Sie et al.
2004/0030797 A1 2/2004 Akinlar et al.
2004/0031054 A1 2/2004 Dankworth et al.
2004/0049780 A1 3/2004 Gee
2004/0054551 A1 3/2004 Ausubel et al.
2004/0071209 A1 4/2004 Burg et al.
2004/0083283 A1 4/2004 Sundaram et al.
2004/0093420 A1 5/2004 Gamble
2004/0103444 A1 5/2004 Weinberg et al.
2004/0117427 A1 6/2004 Allen et al.
2004/0136327 A1 7/2004 Sitaraman et al.
2004/0143672 A1* 7/2004 Padmanabham ... H04L 65/4084 709/231
2004/0168052 A1 8/2004 Clisham et al.
2004/0170392 A1 9/2004 Lu et al.
2004/0179032 A1 9/2004 Huang
2004/0199655 A1 10/2004 Davies et al.
2004/0202109 A1 10/2004 Akiyama et al.
2004/0220926 A1 11/2004 Lamkin et al.
2004/0221088 A1 11/2004 Lisitsa et al.
2004/0260701 A1 12/2004 Lehikoinen et al.
2004/0260827 A1 12/2004 Wang
2004/0267956 A1 12/2004 Leon et al.
2005/0015509 A1 1/2005 Sitaraman
2005/0033855 A1 2/2005 Moradi et al.
2005/0055425 A1* 3/2005 Lango H04N 7/17318 709/219
2005/0066063 A1* 3/2005 Grigorovitch H04N 21/6125 710/1
2005/0076136 A1 4/2005 Cho et al.
2005/0084166 A1 4/2005 Bonch et al.
2005/0108414 A1 5/2005 Taylor et al.
2005/0120107 A1 6/2005 Kagan et al.
2005/0123058 A1 6/2005 Greenbaum et al.
2005/0177618 A1 8/2005 Zimler et al.
2005/0185578 A1 8/2005 Padmanabham et al.
2005/0188051 A1 8/2005 Sneh
2005/0204046 A1 9/2005 Watanabe
2005/0207569 A1 9/2005 Zhang et al.
2005/0251832 A1 11/2005 Chiueh
2005/0262257 A1 11/2005 Major et al.
2006/0010003 A1 1/2006 Kruse
2006/0059223 A1 3/2006 Klemets et al.
2006/0075446 A1 4/2006 Klemets et al.
2006/0080718 A1 4/2006 Gray et al.
2006/0130118 A1 6/2006 Damm
2006/0133809 A1 6/2006 Chow et al.
2006/0165166 A1 7/2006 Chou et al.
2006/0168290 A1 7/2006 Doron
2006/0168295 A1 7/2006 Batterberry et al.
2006/0206246 A1 9/2006 Walker
2006/0236219 A1 10/2006 Grigorovitch et al.
2006/0277564 A1 12/2006 Jarman
2007/0024705 A1 2/2007 Richter et al.
2007/0030833 A1 2/2007 Pirzada et al.
2007/0067480 A1 3/2007 Beek et al.
2007/0079325 A1 4/2007 de Heer
2007/0094405 A1 4/2007 Zhang
2007/0204310 A1 8/2007 Hua et al.
2007/0280255 A1 12/2007 Tsang et al.
2008/0022343 A1 1/2008 Hodzic et al.
2008/0028428 A1 1/2008 Jeong et al.
2008/0037527 A1 2/2008 Chan et al.
2008/0046939 A1 2/2008 Lu et al.
2008/0056373 A1 3/2008 Newlin et al.
2008/0086570 A1 4/2008 Dey et al.
2008/0104647 A1 5/2008 Hannuksela
2008/0120330 A1 5/2008 Reed et al.
2008/0120342 A1 5/2008 Reed et al.
2008/0133766 A1 6/2008 Luo
2008/0162713 A1 7/2008 Bowra et al.
2008/0184688 A1 8/2008 Daly et al.
2008/0195744 A1 8/2008 Bowra et al.
2008/0205291 A1 8/2008 Li et al.
2008/0219151 A1 9/2008 Ma et al.

(56) **References Cited**

U.S. PATENT DOCUMENTS

2008/0222235	A1	9/2008	Hurst et al.
2008/0263180	A1	10/2008	Hurst et al.
2008/0281803	A1	11/2008	Gentric
2009/0043906	A1	2/2009	Hurst et al.
2009/0055471	A1	2/2009	Kozat et al.
2009/0055547	A1	2/2009	Hudson et al.
2009/0210549	A1	8/2009	Hudson et al.
2010/0098103	A1	4/2010	Xiong et al.
2010/0262711	A1	10/2010	Bouazizi
2011/0307545	A1	12/2011	Bouazizi
2015/0058496	A1	2/2015	Hurst et al.

FOREIGN PATENT DOCUMENTS

EP	0919952	A1	6/1999
EP	1202487	A2	5/2002
EP	1298931	A2	4/2003
EP	139497	A2	3/2004
EP	1395014	A1	3/2004
EP	1670256	A2	6/2006
EP	1777969		4/2007
EP	1394973	B1	5/2010
GB	2367219	A	3/2002
JP	2000-201343		7/2000
JP	200192752		4/2001
JP	2004295569	A	10/2004
JP	2011004225	A	1/2011
KR	2005000116	A	1/2005
WO	2001067264	A1	9/2001
WO	2002045372	A1	6/2002
WO	0245372	A3	9/2002
WO	2003009581	A1	1/2003
WO	03041413	A1	5/2003
WO	2003041413	A1	5/2003
WO	2003042856	A1	5/2003
WO	2004021668	A1	3/2004
WO	2004025405	A2	3/2004
WO	2004057832	A1	7/2004
WO	2006010113	A2	1/2006
WO	2006086717	A1	8/2006

OTHER PUBLICATIONS

Krasic et al., QoS Scalability for Streamed Media Delivery, Oregon Graduate Institute School of Science & Engineering Technical Report CSE 99-011, Sep. 1999.

Huang et al., Adaptive Live Video Streaming by Priority Drop, Portland State University PDXScholar, Jul. 21, 2003.

Walpole et al, A Player for Adapctive MPEG Video Streaming Over the Internet, Oregon Graduate Institute of Science and Technology, Oct. 25, 2012.

Albanese, Andrew et al. "Priority Encoding Transmission", TR-94-039, Aug. 1994, 36 pgs, International Computer Science Institute, Berkeley, CA.

Birney, Bill "Intelligent Streaming", May 2003, Microsoft.

Goyal, Vivek K. "Multiple Description Coding: Compression Meets the Network," Sep. 2001, pp. 74-93, IEEE Signal Processing Magazine.

ON2 Technologies, Inc. "TrueMotion VP7 Video Codec" White Paper, Document Version 1.0, Jan. 10, 2005.

Pathan, Al-Mukaddim et al. "A Taxonomy and Survey of Content Delivery Networks" Australia, Feb. 2007, available at http://www.gridbus.org/reports/CDN-Taxonomy.pdf.

Puri, Rohit et al. "Multiple Description Source Coding Using Forward Error Correction Codes," Oct. 1999, 5 pgs., Department of Electrical Engineering and Computer Science, University of California, Berkeley, CA.

Wicker, Stephen B. "Error Control Systems for Digital Communication and Storage," Prentice-Hall, Inc., New Jersey, USA, 1995, parts 1-6.

Liu, Jiangchuan et al. "Opportunities and Challenged of Peer-to-Peer Internet Video Broadcast," School of Computing Science, Simon Fraser University, British Columbia, Canada.

Clement, B. "Move Networks closes $11.3 Million on First Round VC Funding," Page One PR, Move Networks, Inc. Press Releases, Feb. 7, 2007, http://www.move.tv/press/press20070201.html.

Move Networks, Inc. "The Next Generation Video Publishing System," Apr. 11, 2007; http://www.movenetworks.com/wp-content/uploads/move-networks-publishing-system.pdf.

Yoshimura, Takeshi et al. "Mobile Streaming Media CDN Enabled by Dynamic SMIL", NTT DoCoMo, Multimedia Laboratories and Hewlett-Packard Laboratories,dated May 7-11, 2002, ACM 1-58113-449-5/02/0005; http://www2002.org/CDROM/refereed/515/.

Nguyen, T. et al., Multiple Sender Distributed Video Streaming, IEEE Transactinos on Multimedia, IEEE Service Center, Piscataway, NJ, US, vol. 6, No. 2, Apr. 1, 2004, pp. 315-326, XP011109142, ISSN: 1520-9210, DOI: 10.1109/TMM,2003.822790.

Fujisawa, Hiroshi et al. "Implementaton of Efficient Access Mechanism for Multiple Mirror-Servers" IPSJ SIG Technical Report, vol. 2004, No. 9 (2004-DPS-116), Jan. 30, 2004, Information Processing Society of Japan, pp. 37-42.

Liu, Jiangchuan et al. "Adaptive Video Multicast Over the Internet" IEEE Computer Society, 2003.

"The meaning of performance factor—English-Japanese Weblio Dictionary", [online], Feb. 24, 2012, [searched on Feb. 24, 2012], the Internet <URL:http://ejje.weblio.jp/content/performance+factor>.

Tsuru, et al. "Recent evolution of the Internet measurement and inference techniques", IEICE Technical Report, vol. 103, No. 123, pp. 37-42, Jun. 12, 2003.

Rejaie, Reza et al. "Architectural Considerations for Playback of Quality Adaptive Video OVer the Internet" University of Southern California, Information Sciences Institute, 1998.

Roy, Sumit et al. "A System Architecture for Managing Mobile Streaming Media Services" Streaming Media Systems Group, Hewlett-Packard Laboratories, 2003.

Xu, Dongyan et al. "On Peer-to-Peer Media Streaming" Department of Computer Sciences, Purdue University, 2002.

Kozamerink, Franc "Media Streaming Over the Internet—An Over of Delivery Technologies" EBU Technical Review, Oct. 2002.

Lienhart, Rainer et al. "Challenges in Distributed Video Management and Delivery" Intel Corporation, EECS Dept., UC Berkeley, 2000-2002.

Zhang, Xinyan et al. "CoolStreaming/DONet: A Data-Driven Overlay Network for Peer-to-Peer Live Media Streaming" IEEE 2005.

Guo, Yang "DirectStream: A Directory-Based Peer-to-Peer Video Streaming Service" LexisNexis, Elsevier B.V. 2007.

Roy, S., et al., "Architecture of a Modular Streaming Media Server for Content Delivery Networks," 2002 IEEE. Published in the 2003 International Conference on Multimedia and Expo ICME 2003.

Bommaiah, E., et al., "Design and Implementation of a Caching System for Streaming Media over the Internet," 2000 IEEE. Published in RTAS '00 Proceedings of the Sixth IEEE Real Time Technology and Applications Symposium (RTAS 2000), p. 111.

Defendant Jadoo TV, Inc.'s Disclosure of Invalidity Contentions, U.S. N. Dist. Ca. Case No. 5:18-cv-05214-EJD dated Sep. 22, 2020.

Defendant Jadoo TV, Inc.'s Disclosure of Invalidity Contentions Appendix A, U.S. N. Dist. Ca. Case No. 5:18-cv-05214-EJD dated Sep. 22, 2020.

Balk et al., Adaptive Video Streaming: Pre-Encoded MPEG-4 with Bandwidth Scaling, 44 Computer Networks 415 (Mar. 2004).

RealPlayer Plus™ G2 Manual, RealNetworks Inc., Seattle, WA (1998-1999), pp. 1-77.

Kontothanassis, L. et al., "A Transport Layer for Live Streaming in a Content Delivery Network," Proceedings of the IEEE, 2004. pp. 1408-1419. (Retrieved Aug. 18, 2021 from https://www.akamai.com/it/it/multimedia/documents/technical-publication/a-transport-layer-forlive-streaming-in-a-content-delivery-network-technical-publication.pdf).

Dawson, F. "Improving Quality May Help to Boost Streaming Media," Multichannel News, Dec. 19, 1999. pp. 1-17 Yetrieved Aug. 18, 2021 from https://www.nexttv.com/news/improving-quality-may-help-boost-streaming-media-143325).

(56) **References Cited**

OTHER PUBLICATIONS

"InterVu Granted Key Internet Patent," Bloomberg Business, Dec. 16, 1999 pp. 1-3 (retrieved Aug. 18, 2021 from https://www.bloomberg.com/press-releases/1999-12-16/intervu-granted-key-internet-patent).
"InterVu Streams Ahead Behind the Scenes", Paul Festa, cnet, Jan. 2, 2002 (retrieved Aug. 18, 2021 from https://www.cnet.com/news/intervu-streams-ahead-behind-the-scenes/).
"Microsoft Announces Beta Release of Windows Media Technologies 4.0," Apr. 13, 1999, pp. 1-5 (retrieved Aug. 18, 2021 from https://news.microsoft.com/1999/04/13/microsoft-announcesbeta-release-of-windows-media-technologies-4-0/).
"Sandpiper Adds RealSystem G2 to its Content Delivery Network," CBR Staff, Aug. 4, 1999, pp. 1-4 (retrieved Aug. 18, 2021 from https://techmonitor.ai/techonology/sandpiper_adds_realsystem_g2_to_its_content_delivery_nnetwork.
"Speedera Posts Another Record Fiscal Year, Revenue Jumps 60 Percent," BusinessWire Digital Commerce 360, Jul. 14, 2004, pp. 1-5 (retrieved Aug. 18, 2021 from https://www.digitalcommerce360.com/2004/07/14/speedera-posts-another-record-fiscal-yearrevenue-jumps-60-perc/).
"Developer Documentation QuickTime 6", Apple Computer Inc., Cupertino, CA (2002), pp. 1-240.
"IBM Digital Library Version 2 Expands Its Comprehensive Solution Framework", Software Announcement, Aug. 12, 1997, pp. 1-26 (retrieved Aug. 18, 2021 from https://www-01.ibm.com/common/ssi/ShowDoc.wss?docURL=/common/ssi/rep_ca/2/897/ENUS297-312/index.html&request_locale=en).
"Fresh Approach: Axient founder finds another way to make networking payoff", Y. Tara Teichgraeber, Phoenix Business Journal, Jan. 13, 2002, pp. 1-6 (retrieved Aug. 18, 2021 from https://www.bizjoumals.com/phoenix/stories/2002/01/14/story6.html).
Mac OS X Server QuickTime Streaming Server 5.0 Administration, Apple Computer Inc., Cupertino, CA (2003), pp. 1-65.
Respondents Lululemon Athletica Inc. and Curiouser Products Inc. Response to Complaint US Int'l Trade Commission Investigation. No. 337-TA-1265.
Respondent Peloton Interactive, Inc.'s Response to Complaint US Int'l Trade Commission Investigation. No 337-TA-1265.
Verified Response of Icon Health & Fitness, Inc., Free Motion Fitness, Inc., and Nordictrack, Inc. to Complaint US Int'l Trade Commission Investigation. No. 337-TA-1265.
Muntean, G-M., "A New Adaptive Multimedia Streaming System for All-iP Multi-Service Networks", IEEE Trans. on Broadcasting, Mar. 2004, pp. 1-10, vol. 50, No. 1.
Akamai buys InterVu, Feb. 7, 2000.
Akamai, Akamai Completes Acquisition of Speedera Networks.
Bill Gates Unveils the Next Wave of Digital Media with Windows Media 9 Series, Sep. 3, 2002.
Darwin Steaming Server Source Code Developer Notes, Jun. 15, 2021, Darwin Steaming Server 2.
IBM Goes Straight to Video—CNET, Jun. 15, 2021.
News in Brief: IBM VideoCharger, Dec. 18, 1996.
Birney, "Intelligent Streaming", May 21, 2021.
InterVu & Excalibur Partner to Deliver Live Internet Newscasts—Bloomberg, Dec. 9, 1999.
Introduction to Streaming Media with RealOne Player, Oct. 1, 2002.
Macromedia Delivers Macromedia Flash Communication Server MX Breakthrough server unifies communications and applications to deliver live, human interactions on the Internet, Jul. 9, 2002.
Press Releases: Macromedia Flash Media Server 2 Now Available. Flash Media Server 2 Brings the Power of the Flash Platform to Web Video.
Move Networks: The Story of a Failure—GigaOm.
QuickTime 6: Summary of Changes and Enhancements.
Chou, et al., "Rate-Distortion Optimized Receiver-Driven Streaming over Best-Effort Networks", IEEE Fourth Workshop on Multimedia Signal Processing, Oct. 3, 2001, pp. 1-10.
Festa P., RealNetworks tests G2, Jul. 13, 1998.
RealNetworks Production Guide, with RealOne Player, Oct. 1, 2002.
RealSystem G2 Production Guide BETA 1 Release.
Sandpiper Networks Signs Partner Deals—InternetNews, Oct. 7, 1999.
Topic, M. "Streaming Media Demystified", McGraw-Hill TELECOM, 2002.
Gallagher, B., "Streaming Video From End to End", ITProToday, Compute Engines, Feb. 28, 1999.
Move Networks: The Fall of Move Networks, Jan. 26, 2010.
Conklin, G.J., et al. "Video Coding for Streaming Media Delivery on the Internet", IEEE Trans. on Circuits and Systems for Video Technology, Mar. 3, 2001, pp. 281, vol. 11. No 3.
Claim Chart Against U.S. Pat. No. 10,469,554 ("'554 patent") Wang.
Claim Chart Against U.S. Pat. No. 10,469,554 ("'554 patent") Wu.
Claim Chart Against U.S. Pat. No. 10,469,554 ("'554 patent") Dey.
Claim Chart Against U.S. Pat. No. 10,469,554 ("'554 patent") Microsoft.
Claim Chart Against U.S. Pat. No. 9,407,564 ("'564 patent") Akiyama et al.
Claim Chart Against U.S. Pat. No. 9,407,564 ("'564 patent") Arye et al.
Claim Chart Against U.S. Pat. No. 9,407,564 ("'564 patent") Carmel et al.
Claim Chart Against U.S. Pat. No. 9,407,564 ("'564 patent") Chou et al.
Claim Chart Against U.S. Pat. No. 9,407,564 ("'564 patent") Durrant et al.
Claim Chart Against U.S. Pat. No. 9,407,564 ("'564 patent") Gentric.
Claim Chart Against U.S. Pat. No. 9,407,564 ("'564 patent") Kitamura.
Claim Chart Against U.S. Pat. No. 9,407,564 ("'564 patent") Klemets et al.
Claim Chart Against U.S. Pat. No. 9,407,564 ("'564 patent") Oplayo et al.
Claim Chart Against U.S. Pat. No. 9,407,564 ("'564 patent") QOAS.
Claim Chart Against U.S. Pat. No. 9,407,564 ("'564 patent") QuickTime Changes.
Claim Chart Against U.S. Pat. No. 9,407,564 ("'564 patent") QuickTime.
Claim Chart Against U.S. Pat. No. 9,407,564 ("'564 patent") Ravi.
Claim Chart Against U.S. Pat. No. 9,407,564 ("'564 patent") RealOne Player.
Claim Chart Against U.S. Pat. No. 9,407,564 ("'564 patent") Walker.
Claim Chart Against U.S. Pat. No. 9,407,564 ("'564 patent") Wang.
Claim Chart Against U.S. Pat. No. 9,407,564 ("'564 patent") Wu.
Claim Chart Against U.S. Pat. No. 9,407,564 ("'564 patent") RealSystem G2.
Claim Chart Against U.S. Pat. No. 10,469,554 ("'554 patent") Akiyama et al.
Claim Chart Against U.S. Pat. No. 10,469,554 ("'554 patent") Ayre.
Claim Chart Against U.S. Pat. No. 10,469,554 ("'554 patent") Carmel et al.
Claim Chart Against U.S. Pat. No. 10,469,554 ("'554 patent") Chou et al.
Claim Chart Against U.S. Pat. No. 10,469,554 ("'554 patent") Durrant et al.
Claim Chart Against U.S. Pat. No. 10,469,554 ("'554 patent") Gentric.
Claim Chart Against U.S. Pat. No. 10,469,554 ("'554 patent") Kitamura.
Claim Chart Against U.S. Pat. No. 10,469,554 ("'554 patent") Klemets.
Claim Chart Against U.S. Pat. No. 10,469,554 ("'554 patent") Oplayo.
Claim Chart Against U.S. Pat. No. 10,469,554 ("'554 patent") QOAS.
Claim Chart Against U.S. Pat. No. 10,469,554 ("'554 patent") QuickTime Changes.

(56) **References Cited**

OTHER PUBLICATIONS

Claim Chart Against U.S. Pat. No. 10,469,554 ("'554 patent") QuickTime.
Claim Chart Against U.S. Pat. No. 10,469,554 ("'554 patent") Ravi.
Claim Chart Against U.S. Pat. No. 10,469,554 ("'554 patent") RealOne Player.
Claim Chart Against U.S. Pat. No. 10,469,554 ("'554 patent") Walker.
DISH—Respondent's Joint Disclosure of Supplemental Invalidity Contentions in Response to Individual Interrogatories.
Mirror—Respondents Lululemon Athletica Inc. and Curiouser Products Inc. d/b/a Mirror First Amended Response to Complaint Under Section 337 of the Tariff Act of 1930, As Amended, Statement of Public Interestand Notice of Institution of Investigation.
Peloton—Respondent Peloton Interactive, Inc.'s First Amended Response to Complaint and to Notice of Investigation.
Icon—Respondents' Joint Disclosure of Initial Invalidity Contentions in Response to Individual Interrogatories.
Respondents' Notice of Prior Art.
Icon and Free Motion Fitness, Inc. Verified Response of Icon Health & Fitness, Inc., Free Motion Fitness, Inc., and Nordictrack, Inc. to Complaint of Dish DBS Corporation, Dish Technologies L.L.C., and Sling TV L.L.C. and to Notice of Investigation.
Investigation No. 337-TA-1265: Redacted Rebuttal Expert Report of Teresa Stanek Rea.
Investigation No. 337-TA-1265: Redacted Rebuttal Expert Report of Kevin Jeffay, Phd., Regarding Validity.
Investigation No. 337-TA-1265: Redacted Expert Report of Dr. Iain Richardson on Invalidity.
Investigation No. 337-TA-1265: Redacted Expert Report of Robert L. Stoll.
Investigation No. 337-TA-1265: Appendix A To Expert Report of Dr. Iain Richardson on Invalidity: Anticipation and Obviousness Over Carmel.
Investigation No. 337-TA-1265: Appendix B To Expert Report of Dr. Iain Richardson on Invalidity: Anticipation and Obviousness Over Akiyama.
Investigation No. 337-TA-1265: Appendix C-1 To Expert Report of Dr. Iain Richardson on Invalidity: Anticipation and Obviousness Over Realnetworks.
Investigation No. 337-TA-1265: Appendix C-2 To Expert Report of Dr. Iain Richardson on Invalidity: Realnetworks Experimentation.
Investigation No. 337-TA-1265: Appendix D To Expert Report of Dr. Iain Richardson on Invalidity: Anticipation and Obviousness Over Klemets.
Investigation No. 337-TA-1265: Exhibit E To Expert Report of Dr. Iain Richardson on Invalidity: Anticipation and Obviousness Over Oplayo.
Investigation No. 337-TA-1265: Appendix F To Expert Report of Dr. Iain Richardson on Invalidity: Anticipation and Obviousness Over Kikuchi.
Investigation No. 337-TA-1265: Appendix G To Expert Report of Dr. Iain Richardson on Invalidity: Anticipation and Obviousness Over Takemura.
Investigation No. 337-TA-1265: Appendix H To Expert Report of Dr. Iain Richardson on Invalidity: Public Use [Redacted].
Investigation No. 337-TA-1265: Exhibit 1 Dr. Iain Richardson curriculum vitae Dec. 21.
Investigation No. 337-TA-1265: Richardson Report Exhibit 3: Materials Condisered.
Investigation No. 337-TA-1265: Appendix A To Supplemental Expert Report if Dr. Iain Richardson [Redacted].
Investigation No. 337-TA-1265: Supplemental Expert Report of Robert L. Stoll.
Investigation No. 337-TA-1265: Supplemental Expert Report of Dr. Iain Richardson on Invalidity [Redacted].
Investigation No. 337-TA-1265: Supplemental Rebuttal Expert Report of Kevin Jeffay, PHD., Regarding Validity [Redacted].
Investigation No. 337-TA-1265: Supplemental Rebuttal Expert Report of Teresa Stanek Rea [Redacted].
Respondents' Post-Hearing Brief (Redacted) dated Mar. 29, 2022 (321 pages).
Complainants' Post-Hearing Reply Brief (Redacted) dated Apr. 7, 2022 (105 pages).
Commission Investigative Staffs Post-Hearing Reply Brief (Redacted) dated Apr. 13, 2022 (42 pages).
Commission Investigative Staff's Post-Hearing Brief (Redacted) dated Apr. 1, 2022 (311 pages).
Respondents' Reply Post-Hearing Brief (Redacted) dated Apr. 7, 2022 (106 pages).
Complainants' Post-Hearing Brief (Redacted) dated Mar. 29, 2022 (326 pages).
Appendix H, Appendix H to Expert Report of Dr. Iain Richardson on Invalidity: Public Use (40 pages).
The Wayback Machine, dated Nov. 8, 2021 (1 page).
In the Matter of: Certain Fitness Devices, Videotaped Deposition of BYU Broadcasting, Mark Mitchell, dated Dec. 2, 2021 (123 pages).
The Wayback Machine, bates labeled RESP-PA06323, dated Dec. 7, 2021 (1 page).
The Wayback Machine, bates labeled RESP-PA06257, dated Nov. 8, 2021 (1 page).
The Wayback Machine, bates labeled RESP-PA06256, dated Nov. 8, 2021 (1 page).
Move Media, bates labeled RESP-PA06253, dated Nov. 8, 2021 (1 page).
The Wayback Machine, bates labeled RESP-PA06252, dated Nov. 8, 2021 (1 page).
BYU Television, bates labeled RESP-PA06247 to RESP-PA06248, dated Nov. 8, 2021 (2 pages).
Mitchell Exhibit 13, BYU-TV Live, FAQ, bates labeled RESP-PA06275to RESP-PA06276, dated Dec. 2, 2021 (2 pages).
Mitchell Exhibit 12, BYU Television, The Wayback Machine, bates labeled RESP-PA06268- to RESP-PA06269, dated Dec. 2, 2021 (2 pages).
Mitchell Exhibit 11, BYU Television, The Wayback Machine, bates labeled RESP-PA06272 to RESP-PA06274, dated Dec. 2, 2021 (3 pages).
Mitchell Exhibit 10, BYU Television, The Wayback Machine, bates labeled RESP-PA06266 to RESP-PA06267, dated Dec. 2, 2021 (2 pages).
Mitchell Exhibit 7, BYU Television, The Wayback Machine, bates labeled RESP-PA06270 to RESP-PA06271, dated Dec. 2, 2021 (2 pages).
Mitchell Exhibit 6, bates labeled BYU000012-BYU000013, dated Dec. 2, 2021 (2 pages).
Mitchell Exhibit 5, BYU Television, The Wayback Machine, bates labeled RESP-PA06263 to RESP-PA06264, dated Dec. 2, 2021 (2 pages).
Mitchell Exhibit 4, BYU Television, The Wayback Machine, bates labeled RESP-PA06261 to RESP-PA06262, dated Dec. 2, 2021 (2 pages).
Mitchell Exhibit 3, BYU Television, The Wayback Machine, bates labeled BYU000001, dated Dec. 2, 2021 (1 page).
Mitchell Exhibit 2, Conference Summary for the 175th Semiannual General Conference, dated Dec. 2, 2021 (3 pages).
Major Exhibit 62, Official Report of the One Hundred Seventy-fifth Semiannual General Conference of The Church of Jesus Christ of Latter-day Saints, dated Nov. 5, 2021 (128 pages).
In the Matter of: In Re Certain Fitness Devices, Videotaped Deposition of Peloton Interactive, Inc., Drew Major, dated Dec. 17, 2021 (72 pages).
In the Matter of: In Re Certain Fitness Devices and Systems Containing Same, Videotaped Deposition of John Edwards, dated Nov. 12, 2021 (191 pages).
In the Matter of: In Re Certain Fitness Devices and Systems Containing Same, Videotaped Deposition of Robert Drew Major, dated Nov. 5, 2021 (268 pages).
Uncertified Rough Draft Transcript, Deposition of Mark Hurst, vol. 2, dated Dec. 3, 2021 (51 pages).
Hurst Exhibit 68, Move Media, dated Nov. 19, 2021 (1 page).
Bates labeled RESP-PA06326 to RESP-PA06337, dated Dec. 7, 2021 (12 pages).
Bates labeled RESP-PA06255 (1 page).

(56) **References Cited**

OTHER PUBLICATIONS

Bates labeled RESP-PA06254 (1 page).
International Search Report for EP application 20216568.4 dated Apr. 19, 2021 (15 pages).
Response to International Search Report filed with EP application 20216568.4 dated Nov. 19, 2021 (41 pages).

* cited by examiner

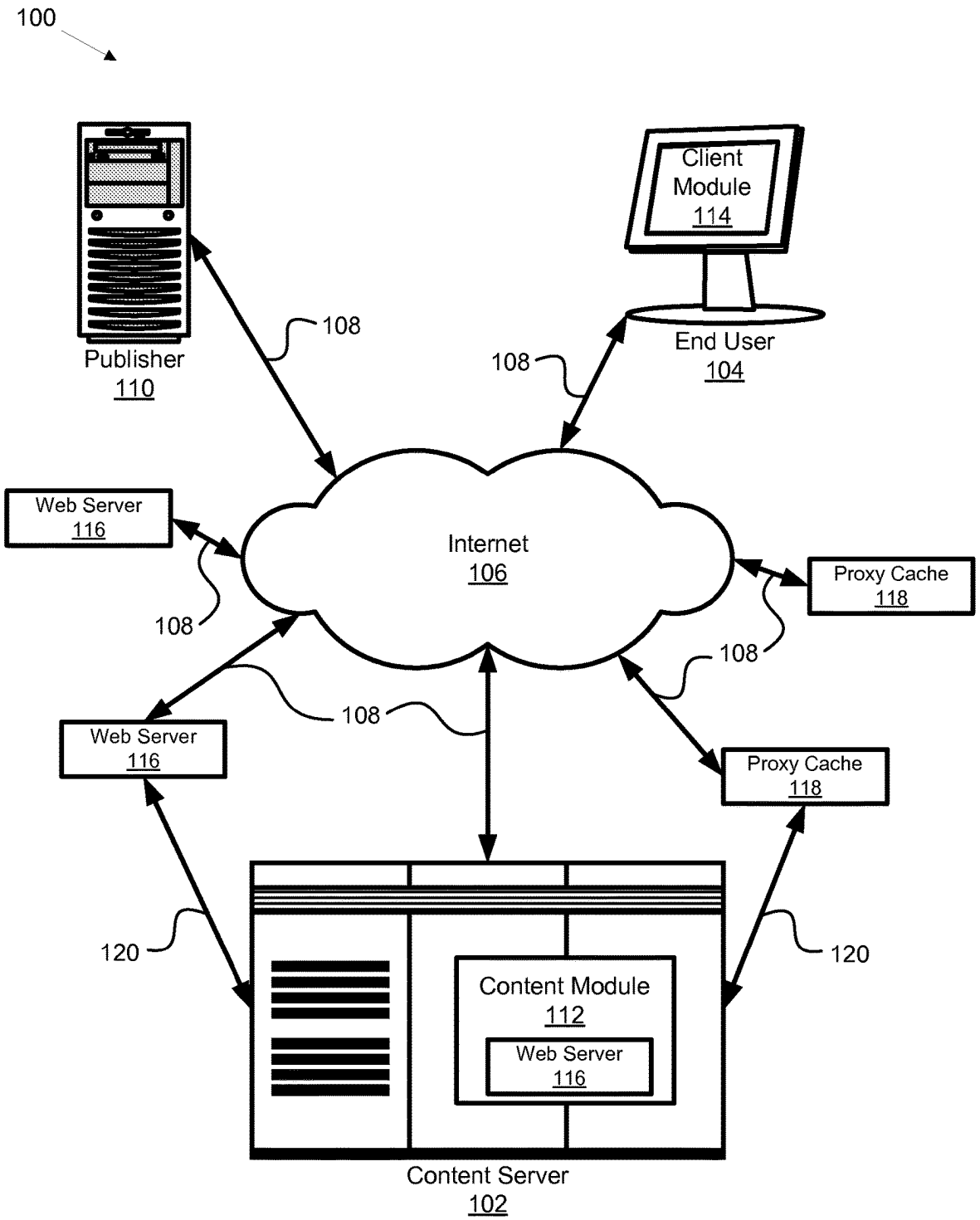
100
Publisher
110
108
Client
Module
114
End User
104
108
Web Server
116
Internet
106
Proxy Cache
118
108
108
108
Web Server
116
Proxy Cache
118
120
120
Content Module
112
Web Server
116
Content Server
102

FIG. 1

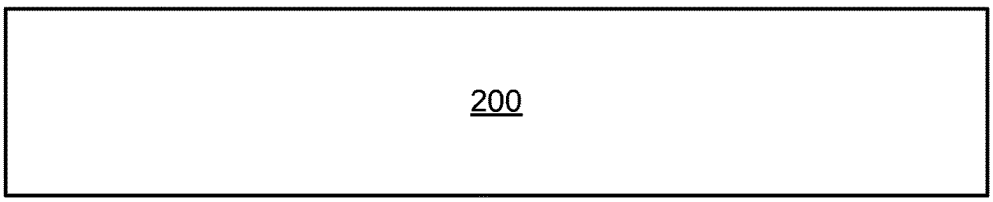

FIG. 2a

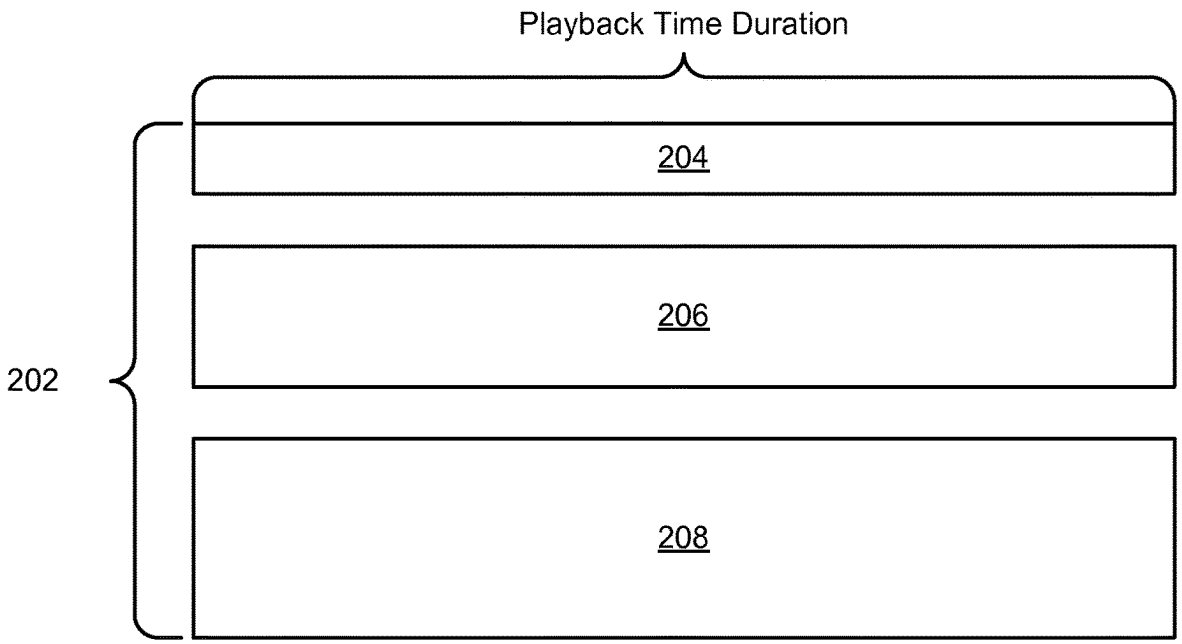

FIG. 2b

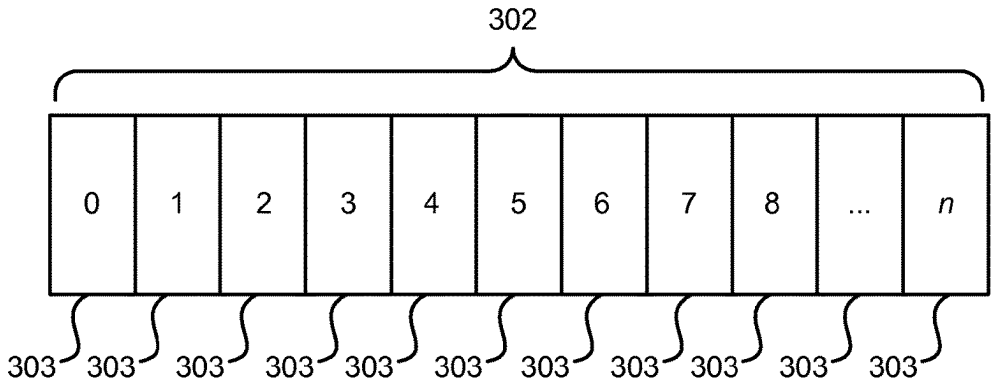
302
0
1
2
3
4
5
6
7
8
...
n
303

FIG. 3a

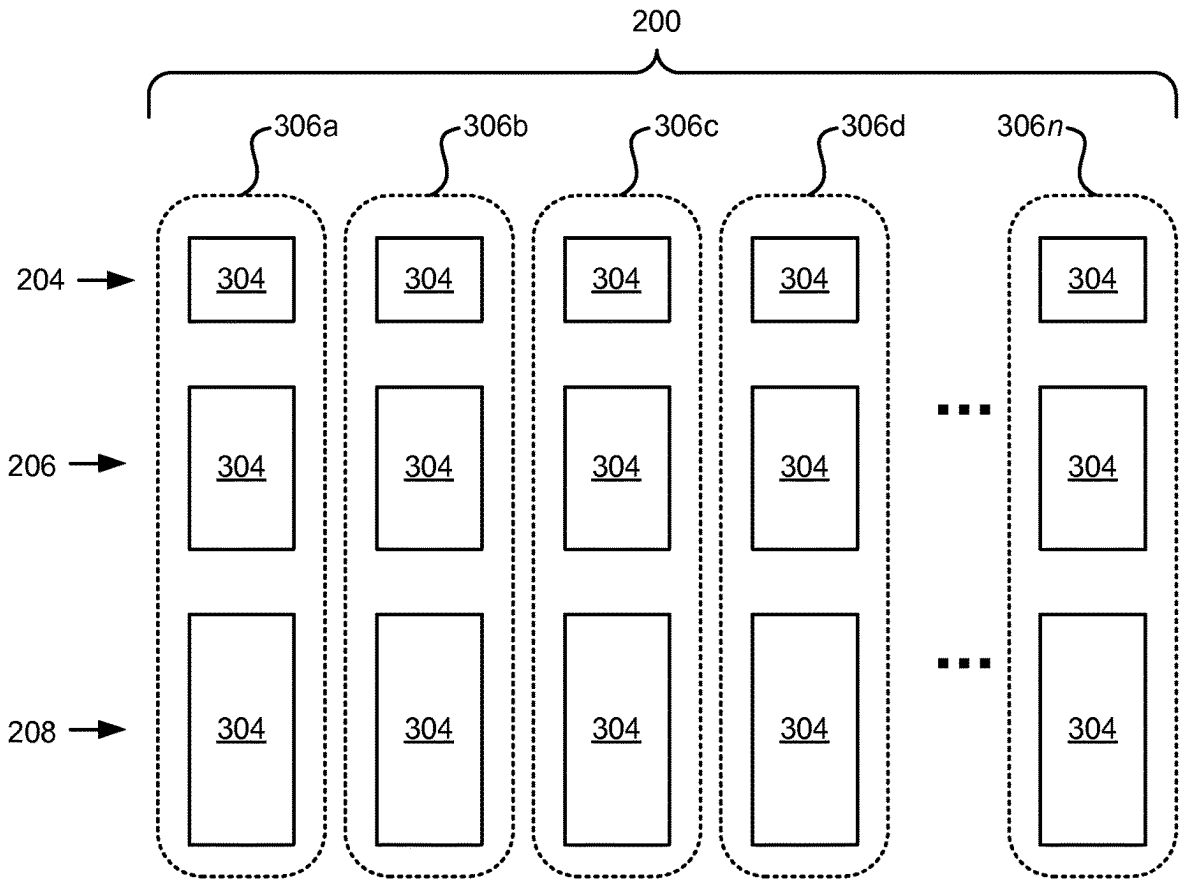
200
306a
306b
306c
306d
306n
204
206
208
304

FIG. 3b

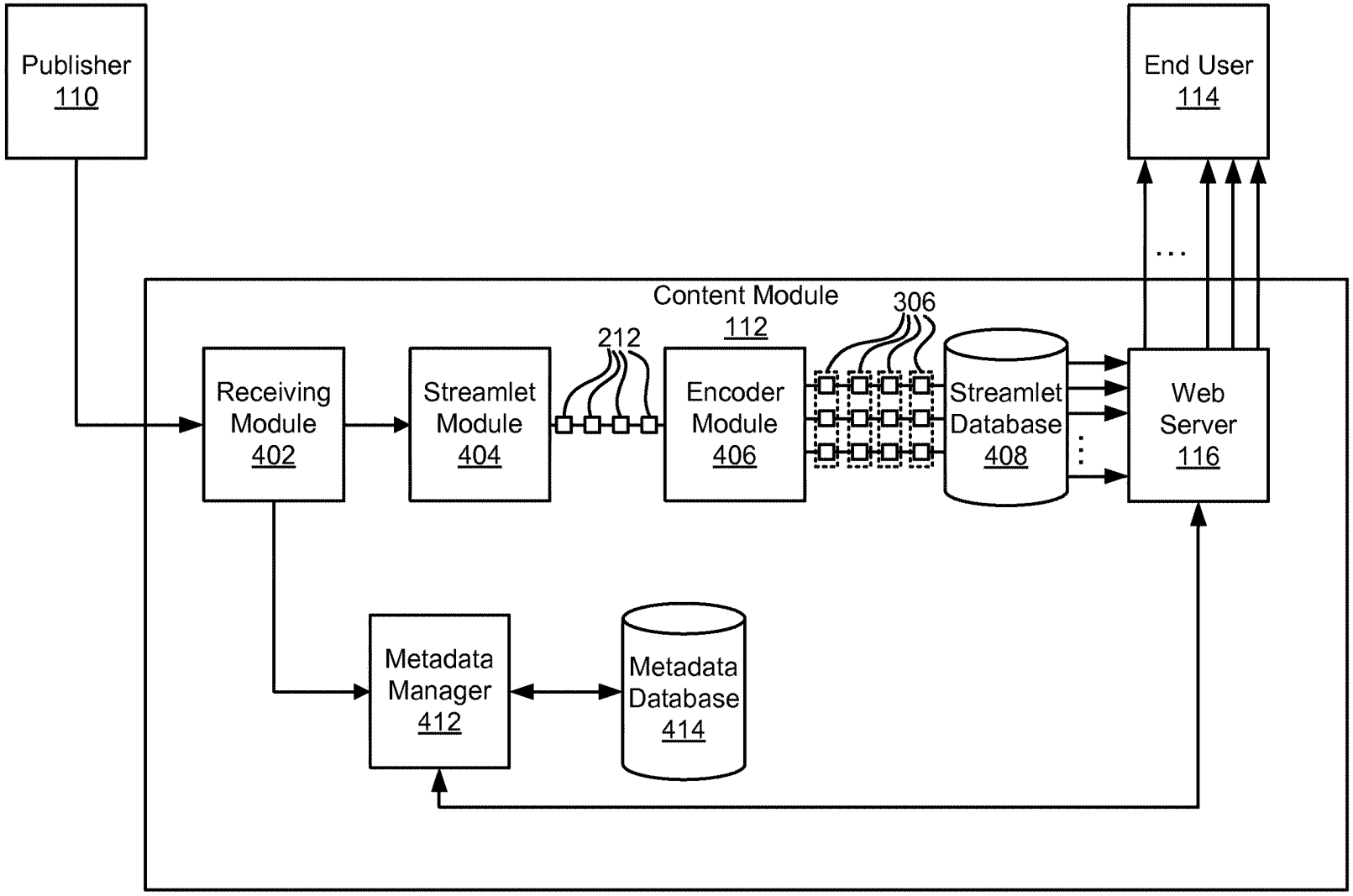
Publisher
110
End User
114
Content Module
112
306
212
Receiving
Module
402
Streamlet
Module
404
Encoder
Module
406
Streamlet
Database
408
Web
Server
116
Metadata
Manager
412
Metadata
Database
414

FIG. 4

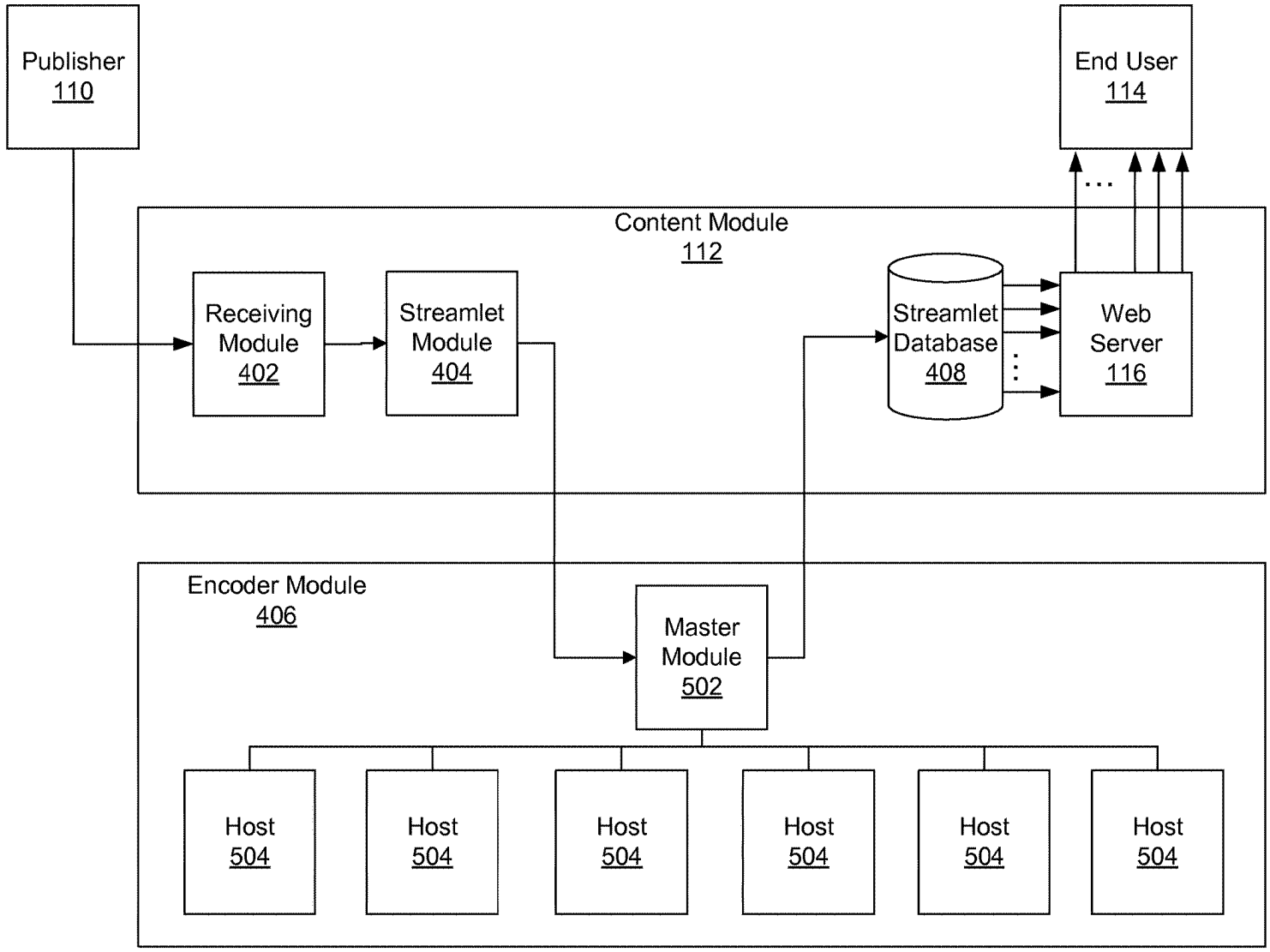
Publisher
110
End User
114
Content Module
112
Receiving
Module
402
Streamlet
Module
404
Streamlet
Database
408
Web
Server
116
Encoder Module
406
Master
Module
502
Host
504
Host
504
Host
504
Host
504
Host
504
Host
504

FIG. 5a

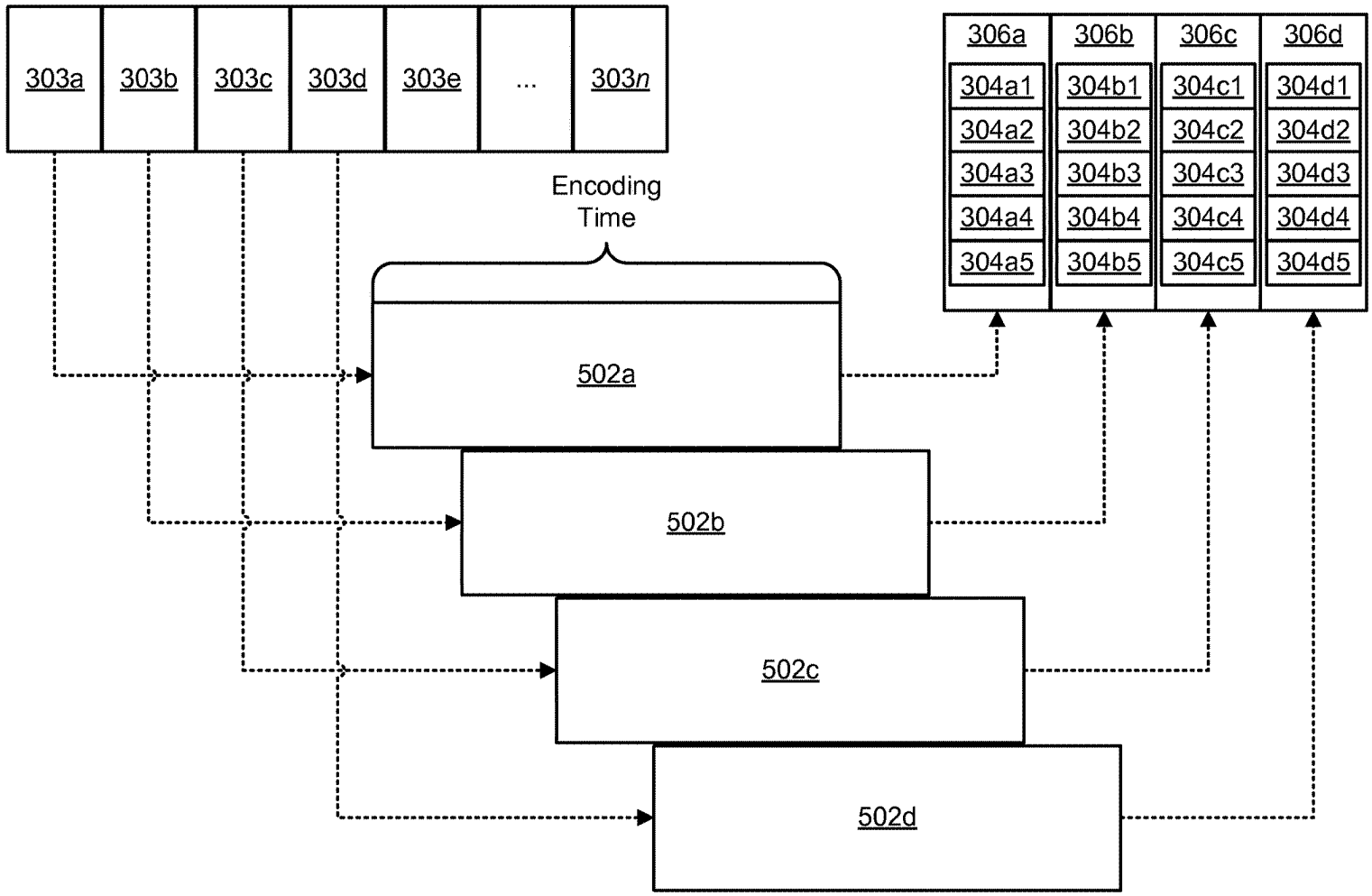
303a
303b
303c
303d
303e
...
303n
Encoding Time
502a
502b
502c
502d
306a
306b
306c
306d
304a1
304a2
304a3
304a4
304a5
304b1
304b2
304b3
304b4
304b5
304c1
304c2
304c3
304c4
304c5
304d1
304d2
304d3
304d4
304d5

FIG. 5b

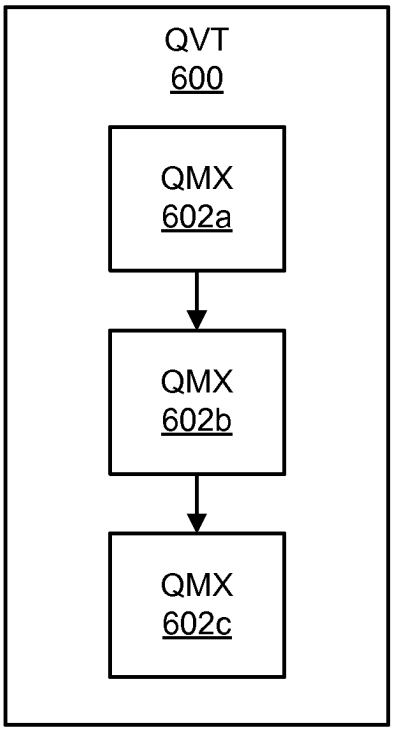

FIG. 6a

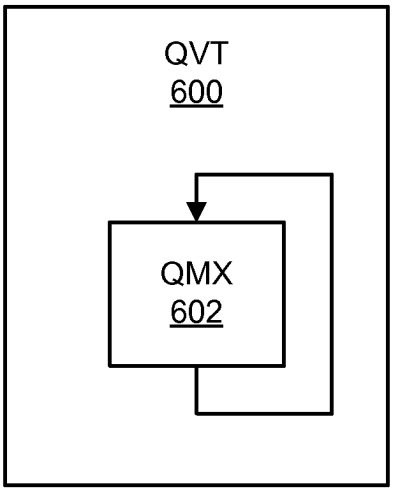

FIG. 6b

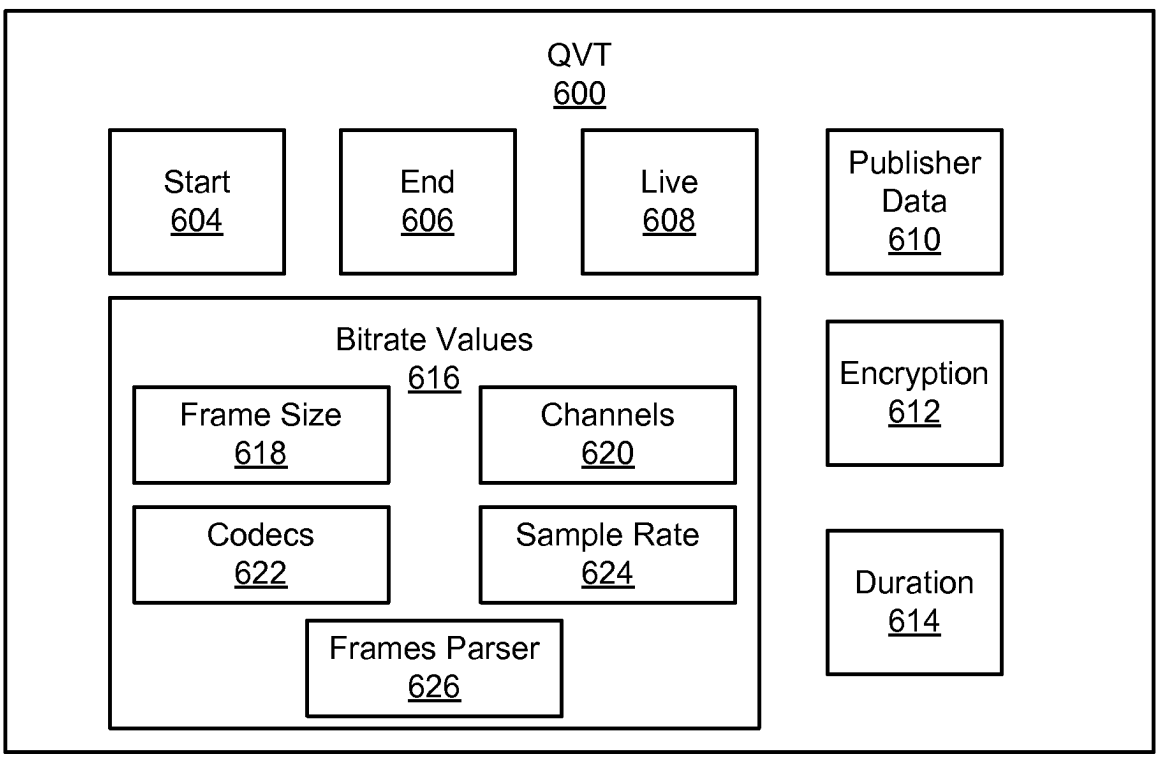

FIG. 6c

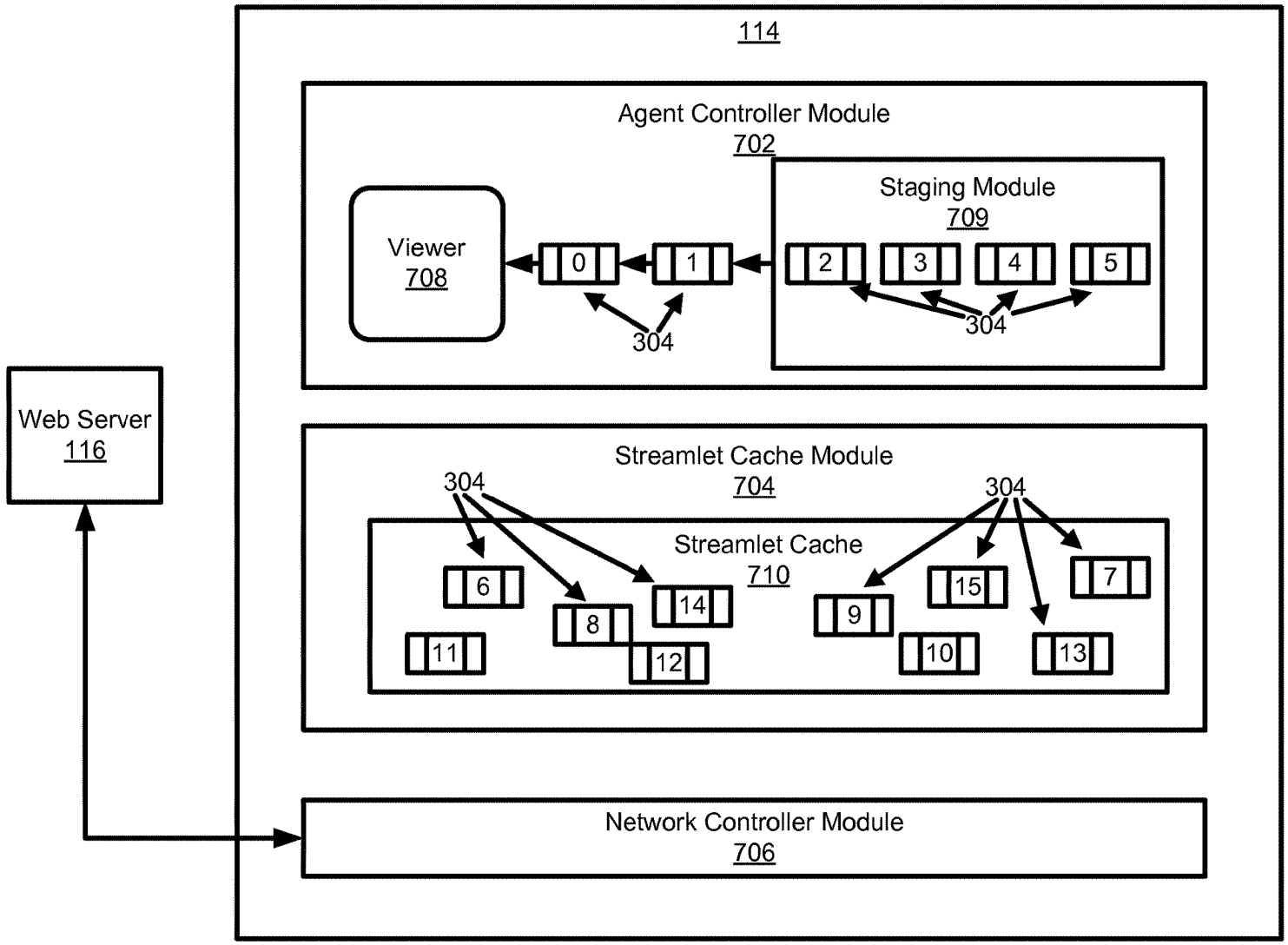
114
Agent Controller Module
702
Staging Module
709
Viewer
708
0
1
2
3
4
5
304
304
Web Server
116
Streamlet Cache Module
704
304
304
Streamlet Cache
710
6
8
14
12
11
9
15
10
7
13
Network Controller Module
706

FIG. 7

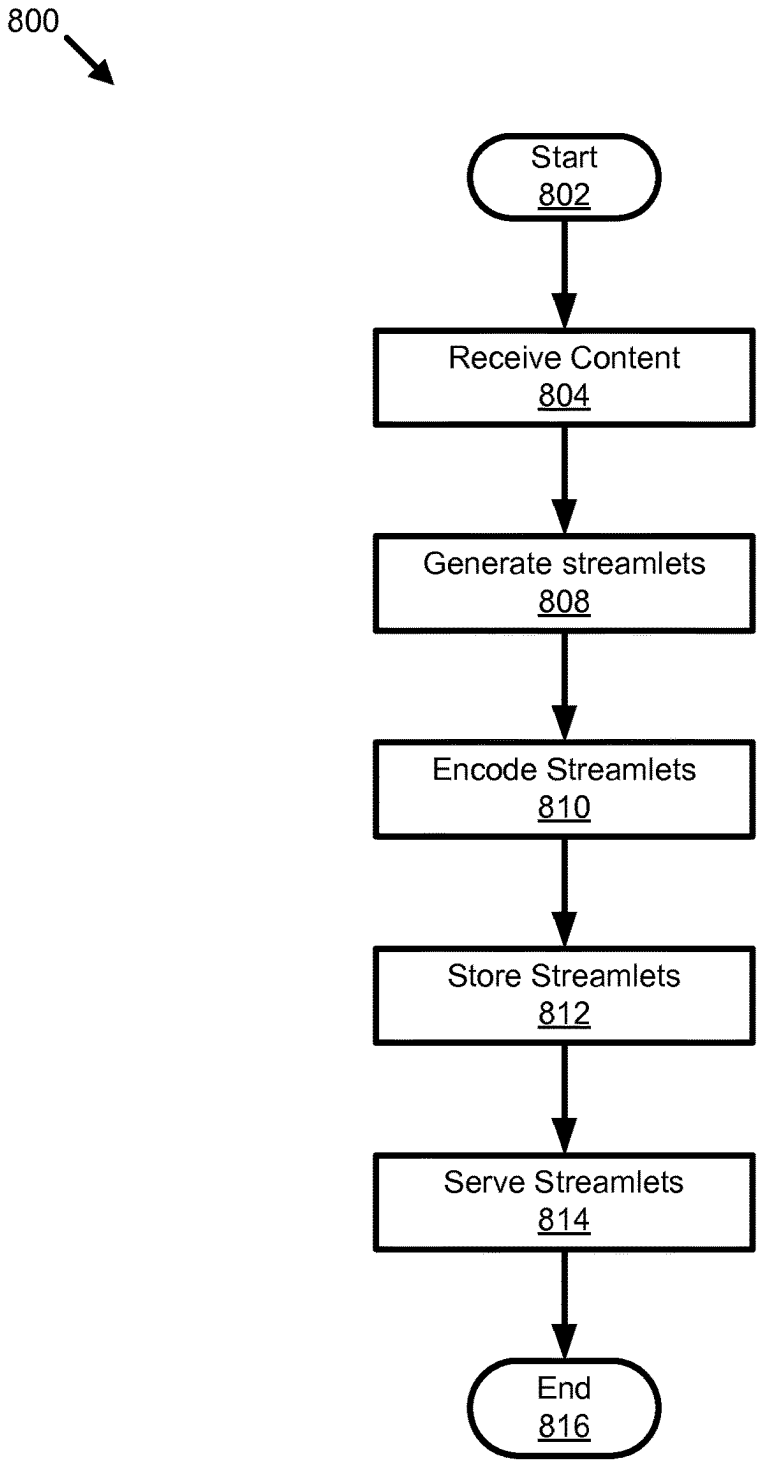
800
Start
802
Receive Content
804
Generate streamlets
808
Encode Streamlets
810
Store Streamlets
812
Serve Streamlets
814
End
816

FIG. 8

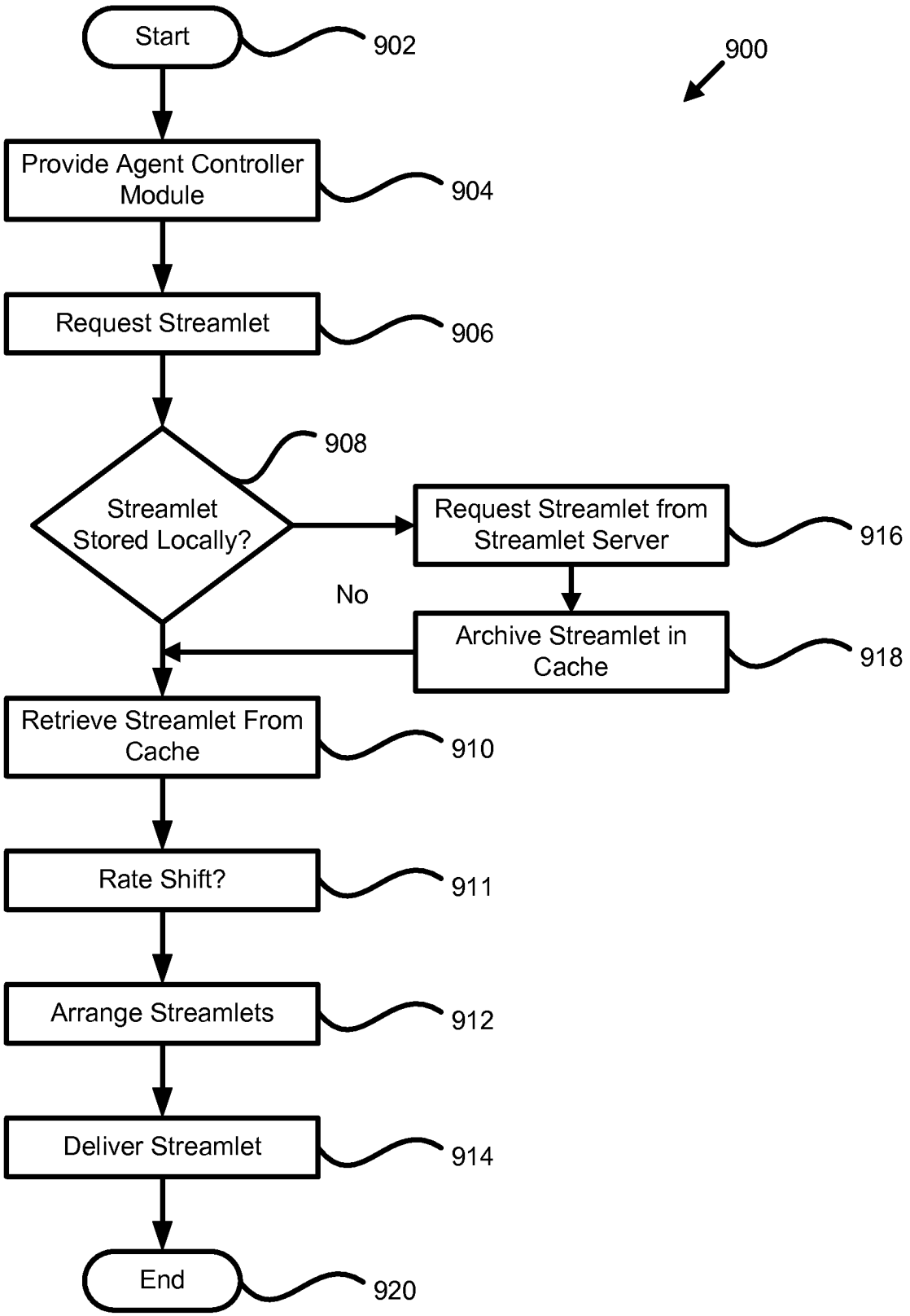
900
Start
902
Provide Agent Controller Module
904
Request Streamlet
906
908
Streamlet Stored Locally?
Request Streamlet from Streamlet Server
916
No
Archive Streamlet in Cache
918
Retrieve Streamlet From Cache
910
Rate Shift?
911
Arrange Streamlets
912
Deliver Streamlet
914
End
920

FIG. 9

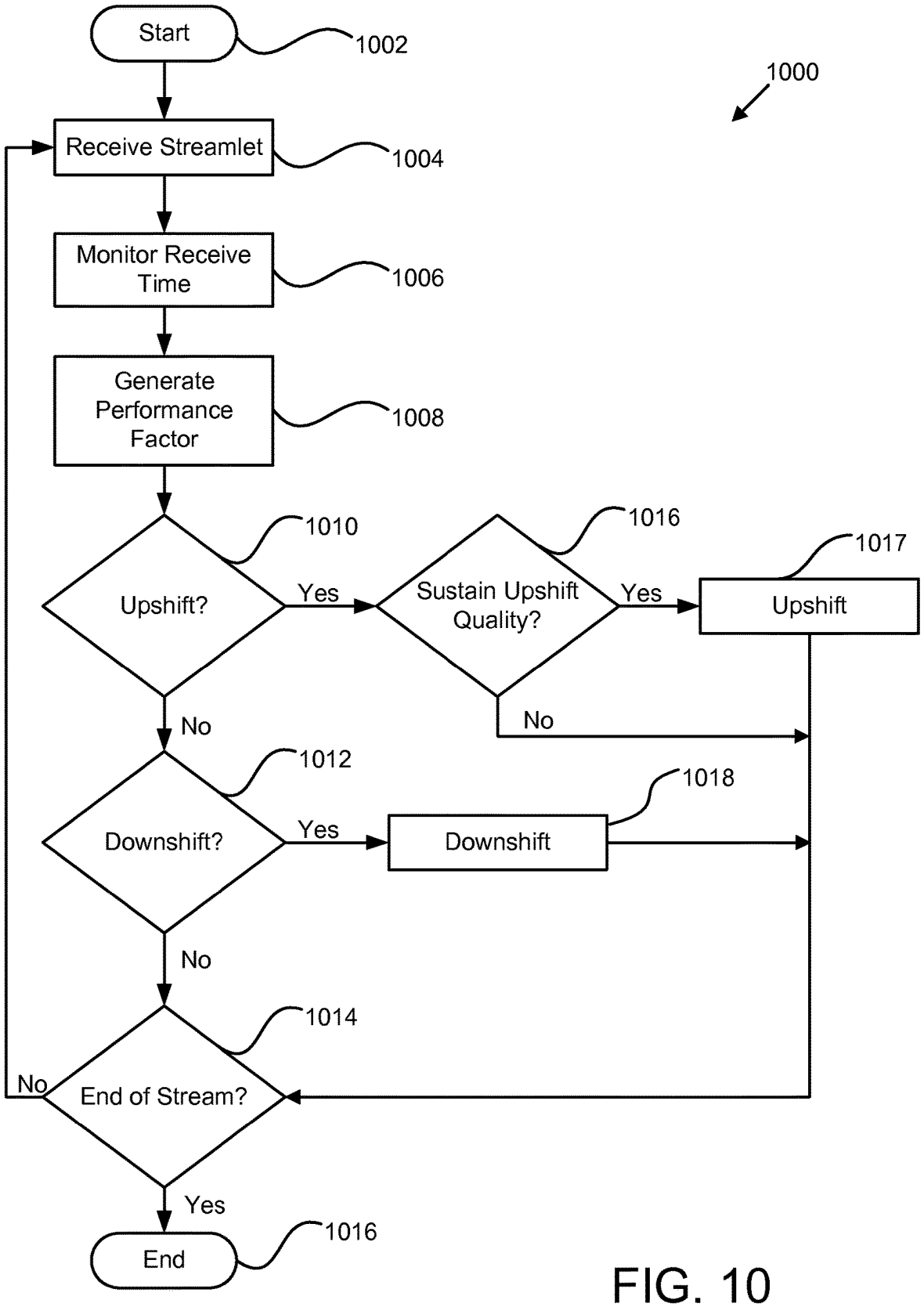
Start
1002
1000
Receive Streamlet
1004
Monitor Receive Time
1006
Generate Performance Factor
1008
1010
Upshift?
Yes
1016
Sustain Upshift Quality?
Yes
1017
Upshift
No
No
1012
Downshift?
Yes
1018
Downshift
No
1014
No
End of Stream?
Yes
1016
End

FIG. 10

APPARATUS, SYSTEM, AND METHOD FOR MULTI-BITRATE CONTENT STREAMING

CROSS-REFERENCES TO RELATED APPLICATIONS

This application is a continuation of U.S. patent application Ser. No. 16/004,056 filed on Jun. 8, 2018, which is a continuation of U.S. patent application Ser. No. 15/414,025 (now U.S. Pat. No. 9,998,516) filed on Jan. 24, 2017, which is a continuation of U.S. patent application Ser. No. 14/719,122 filed on May 21, 2015, which is a continuation of U.S. patent application Ser. No. 14/106,051 filed on Dec. 13, 2013 (now U.S. Pat. No. 9,071,668), which is a continuation of U.S. patent application Ser. No. 13/617,114, filed on Sep. 14, 2012 (now U.S. Pat. No. 8,612,624), which is a continuation of U.S. patent Ser. No. 12/906,940 filed on Oct. 18, 2010 (now U.S. Pat. No. 8,402,156), which is a continuation of U.S. patent application Ser. No. 11/673,483, filed on Feb. 9, 2007 (now U.S. Pat. No. 7,818,444), which is a continuation-in-part of application Ser. No. 11/116,783, filed on Apr. 28, 2005 (now U.S. Pat. No. 8,868,772), which claims the benefit of U.S. Provisional Application No. 60/566,831, filed on Apr. 31, 2004, all of which are incorporated herein by reference.

BACKGROUND OF THE INVENTION

Field of the Invention

The invention relates to video streaming over packet switched networks such as the Internet, and more particularly relates to adaptive-rate shifting of streaming content over such networks.

Description of the Related Art

The Internet is fast becoming a preferred method for distributing media files to end users. It is currently possible to download music or video to computers, cell phones, or practically any network capable device. Many portable media players are equipped with network connections and enabled to play music or videos. The music or video files (hereinafter "media files") can be stored locally on the media player or computer, or streamed or downloaded from a server.

"Streaming media" refers to technology that delivers content at a rate sufficient for presenting the media to a user in real time as the data is received. The data may be stored in memory temporarily until played and then subsequently deleted. The user has the immediate satisfaction of viewing the requested content without waiting for the media file to completely download. Unfortunately, the audio/video quality that can be received for real time presentation is constrained by the available bandwidth of the user's network connection. Streaming may be used to deliver content on demand (previously recorded) or from live broadcasts.

Alternatively, media files may be downloaded and stored on persistent storage devices, such as hard drives or optical storage, for later presentation. Downloading complete media files can take large amounts of time depending on the network connection. Once downloaded, however, the content can be viewed repeatedly anytime or anywhere. Media files prepared for downloading usually are encoded with a higher quality audio/video than can be delivered in real time. Users generally dislike this option, as they tend to want to see or hear the media file instantaneously.

Streaming offers the advantage of immediate access to the content but currently sacrifices quality compared with downloading a file of the same content. Streaming also provides the opportunity for a user to select different content for viewing on an ad hoc basis, while downloading is by definition restricted to receiving a specific content selection in its entirety or not at all. Downloading also supports rewind, fast forward, and direct seek operations, while streaming is unable to fully support these functions. Streaming is also vulnerable to network failures or congestion.

Another technology, known as "progressive downloads," attempts to combine the strengths of the above two technologies. When a progressive download is initiated, the media file download begins, and the media player waits to begin playback until there is enough of the file downloaded that playback can begin with the hope that the remainder of the file will be completely downloaded before playback "catches up." This waiting period before playback can be substantial depending on network conditions, and therefore is not a complete or fully acceptable solution to the problem of media presentation over a network.

Generally, three basic challenges exist with regard to data transport streaming over a network such as the Internet that has a varying amount of data loss. The first challenge is reliability. Most streaming solutions use a TCP connection, or "virtual circuit," for transmitting data. A TCP connection provides a guaranteed delivery mechanism so that data sent from one endpoint will be delivered to the destination, even if portions are lost and retransmitted. A break in the continuity of a TCP connection can have serious consequences when the data must be delivered in real-time. When a network adapter detects delays or losses in a TCP connection, the adapter "backs off" from transmission attempts for a moment and then slowly resumes the original transmission pace. This behavior is an attempt to alleviate the perceived congestion. Such a slowdown is detrimental to the viewing or listening experience of the user and therefore is not acceptable.

The second challenge to data transport is efficiency. Efficiency refers to how well the user's available bandwidth is used for delivery of the content stream. This measure is directly related to the reliability of the TCP connection. When the TCP connection is suffering reliability problems, a loss of bandwidth utilization results. The measure of efficiency sometimes varies suddenly, and can greatly impact the viewing experience.

The third challenge is latency. Latency is the time measure form the client's point-of-view, of the interval between when a request is issued and the response data begins to arrive. This value is affected by the network connection's reliability and efficiency, and the processing time required by the origin to prepare the response. A busy or overloaded server, for example, will take more time to process a request. As well as affecting the start time of a particular request, latency has a significant impact on the network throughput of TCP.

From the foregoing discussion, it should be apparent that a need exists for an apparatus, system, and method that alleviate the problems of reliability, efficiency, and latency. Additionally, such an apparatus, system, and method would offer instantaneous viewing along with the ability to fast forward, rewind, direct seek, and browse multiple streams. Beneficially, such an apparatus, system, and method would utilize multiple connections between a source and destination, requesting varying bitrate streams depending upon network conditions.

SUMMARY OF THE INVENTION

The present invention has been developed in response to the present state of the art, and in particular, in response to the problems and needs in the art that have not yet been fully solved by currently available content streaming systems. Accordingly, the present invention has been developed to provide an apparatus, system, and method for adaptive-rate content streaming that overcome many or all of the above-discussed shortcomings in the art.

The apparatus for adaptive-rate content streaming is provided with a logic unit containing a plurality of modules configured to functionally execute the necessary steps. These modules in the described embodiments include a receiving module configured to receive media content, a streamlet module configured to segment the media content and generate a plurality of sequential streamlets, and an encoding module configured to encode each streamlet as a separate content file.

The encoding module is further configured to generate a set of streamlets for each of the sequential streamlets. Each streamlet may comprise a portion of the media content having a predetermined length of time. The predetermined length of time may be in the range of between about 0.1 and 5 seconds.

In one embodiment, a set of streamlets comprises a plurality of streamlets having identical time indices, and each streamlet of the set of streamlets has a unique bitrate. The receiving module is configured to convert the media content to raw audio or raw video. The encoding module may include a master module configured to assign an encoding job to one of a plurality of host computing modules in response to an encoding job completion bid. The job completion bid may be based on a plurality of computing variables selected from a group consisting of current encoding job completion percentage, average encoding job completion time, processor speed, and physical memory capacity.

A system of the present invention is also presented for adaptive-rate content streaming. In particular, the system, in one embodiment, includes a receiving module configured to receive media content, a streamlet module configured to segment the media content and generate a plurality of sequential streamlets, each streamlet comprising a portion of the media content having a predetermined length of time, and an encoding module configured to encode each streamlet as a separate content file and generate a set of streamlets.

The system also includes a plurality of streamlets having identical time indices and each streamlet of the set of streamlets having a unique bitrate. The encoding module comprises a master module configured to assign an encoding job to one of a plurality of host computing modules in response to an encoding job completion bid.

A method of the present invention is also presented for adaptive-rate content streaming. In one embodiment, the method includes receiving media content, segmenting the media content and generating a plurality of sequential streamlets, and encoding each streamlet as a separate content file.

The method also includes segmenting the media content into a plurality of streamlets, each streamlet comprising a portion of the media content having a predetermined length of time. In one embodiment, the method includes generating a set of streamlets comprising a plurality of streamlets having identical time indices, and each streamlet of the set of streamlets having a unique bitrate.

Furthermore, the method may include converting the media content to raw audio or raw video, and segmenting the content media into a plurality of sequential streamlets. The method further comprises assigning an encoding job to one of a plurality of host computing modules in response to an encoding job completion bid, and submitting an encoding job completion bid based on a plurality of computing variables.

Reference throughout this specification to features, advantages, or similar language does not imply that all of the features and advantages that may be realized with the present invention should be or are in any single embodiment of the invention. Rather, language referring to the features and advantages is understood to mean that a specific feature, advantage, or characteristic described in connection with an embodiment is included in at least one embodiment of the present invention. Thus, discussion of the features and advantages, and similar language, throughout this specification may, but do not necessarily, refer to the same embodiment.

Furthermore, the described features, advantages, and characteristics of the invention may be combined in any suitable manner in one or more embodiments. One skilled in the relevant art will recognize that the invention may be practiced without one or more of the specific features or advantages of a particular embodiment. In other instances, additional features and advantages may be recognized in certain embodiments that may not be present in all embodiments of the invention.

These features and advantages of the present invention will become more fully apparent from the following description and appended claims, or may be learned by the practice of the invention as set forth hereinafter.

BRIEF DESCRIPTION OF THE DRAWINGS

In order that the advantages of the invention will be readily understood, a more particular description of the invention briefly described above will be rendered by reference to specific embodiments that are illustrated in the appended drawings. Understanding that these drawings depict only typical embodiments of the invention and are not therefore to be considered to be limiting of its scope, the invention will be described and explained with additional specificity and detail through the use of the accompanying drawings, in which:

FIG. **1** is a schematic block diagram illustrating one embodiment of a system for dynamic rate shifting of streaming content in accordance with the present invention;

FIG. **2***a* is a schematic block diagram graphically illustrating one embodiment of a media content file;

FIG. **2***b* is a schematic block diagram illustrating one embodiment of a plurality of streams having varying degrees of quality and bandwidth;

FIG. **3***a* is a schematic block diagram illustrating one embodiment of a stream divided into a plurality of source streamlets;

FIG. **3***b* is a schematic block diagram illustrating one embodiment of sets of streamlets in accordance with the present invention;

FIG. **4** is a schematic block diagram illustrating in greater detail one embodiment of the content module in accordance with the present invention;

FIG. **5***a* is a schematic block diagram illustrating one embodiment of an encoder module in accordance with the present invention;

FIG. **5***b* is a schematic block diagram illustrating one embodiment of parallel encoding of streamlets in accordance with the present invention;

FIG. **6***a* is a schematic block diagram illustrating one embodiment of a virtual timeline in accordance with the present invention;

FIG. **6***b* is a schematic block diagram illustrating an alternative embodiment of a VT in accordance with the present invention;

FIG. **6***c* is a schematic block diagram illustrating one embodiment of a QMX in accordance with the present invention;

FIG. **7** is a schematic block diagram graphically illustrating one embodiment of a client module in accordance with the present invention;

FIG. **8** is a schematic flow chart diagram illustrating one embodiment of a method for processing content in accordance with the present invention;

FIG. **9** is a schematic flow chart diagram illustrating one embodiment of a method for viewing a plurality of streamlets in accordance with the present invention; and

FIG. **10** is a schematic flow chart diagram illustrating one embodiment of a method for requesting streamlets within an adaptive-rate shifting content streaming environment in accordance with the present invention.

DETAILED DESCRIPTION OF THE INVENTION

Many of the functional units described in this specification have been labeled as modules, in order to more particularly emphasize their implementation independence. For example, a module may be implemented as a hardware circuit comprising custom VLSI circuits or gate arrays, off-the-shelf semiconductors such as logic chips, transistors, or other discrete components. A module may also be implemented in programmable hardware devices such as field programmable gate arrays, programmable array logic, programmable logic devices or the like.

Modules may also be implemented in software for execution by various types of processors. An identified module of executable code may, for instance, comprise one or more physical or logical blocks of computer instructions which may, for instance, be organized as an object, procedure, or function. Nevertheless, the executables of an identified module need not be physically located together, but may comprise disparate instructions stored in different locations which, when joined logically together, comprise the module and achieve the stated purpose for the module.

Indeed, a module of executable code may be a single instruction, or many instructions, and may even be distributed over several different code segments, among different programs, and across several memory devices. Similarly, operational data may be identified and illustrated herein within modules, and may be embodied in any suitable form and organized within any suitable type of data structure. The operational data may be collected as a single data set, or may be distributed over different locations including over different storage devices, and may exist, at least partially, merely as electronic signals on a system or network.

Reference throughout this specification to "one embodiment," "an embodiment." or similar language means that a particular feature, structure, or characteristic described in connection with the embodiment is included in at least one embodiment of the present invention. Thus, appearances of the phrases "in one embodiment," "in an embodiment," and similar language throughout this specification may, but do not necessarily, all refer to the same embodiment.

Reference to a signal bearing medium may take any form capable of generating a signal, causing a signal to be generated, or causing execution of a program of machine-readable instructions on a digital processing apparatus. A signal bearing medium may be embodied by a transmission line, a compact disk, digital-video disk, a magnetic tape, a Bernoulli drive, a magnetic disk, a punch card, flash memory, integrated circuits, or other digital processing apparatus memory device. In one embodiment, a computer program product including a computer useable medium having a computer readable program of computer instructions stored thereon that when executed on a computer causes the computer to carry out operations for multi-bitrate content streaming as described herein.

Furthermore, the described features, structures, or characteristics of the invention may be combined in any suitable manner in one or more embodiments. In the following description, numerous specific details are provided, such as examples of programming, software modules, user selections, network transactions, database queries, database structures, hardware modules, hardware circuits, hardware chips, etc., to provide a thorough understanding of embodiments of the invention. One skilled in the relevant art will recognize, however, that the invention may be practiced without one or more of the specific details, or with other methods, components, materials, and so forth. In other instances, well-known structures, materials, or operations are not shown or described in detail to avoid obscuring aspects of the invention.

FIG. **1** is a schematic block diagram illustrating one embodiment of a system **100** for dynamic rate shifting of streaming content in accordance with the present invention. In one embodiment, the system **100** comprises a content server **102** and an end user station **104**. The content server **102** and the end user station **104** may be coupled by a data communications network. The data communications network may include the Internet **106** and connections **108** to the Internet **106**. Alternatively, the content server **102** and the end user **104** may be located on a common local area network, wireless area network, cellular network, virtual local area network, or the like. The end user station **104** may comprise a personal computer (PC), an entertainment system configured to communicate over a network, or a portable electronic device configured to present content. For example, portable electronic devices may include, but are not limited to, cellular phones, portable gaming systems, and portable computing devices.

In the depicted embodiment, the system **100** also includes a publisher **110**, and a web server **116**. The publisher **110** may be a creator or distributor of content. For example, if the content to be streamed were a broadcast of a television program, the publisher **110** may be a television or cable network channel such as NBC®, or MTV®. Content may be transferred over the Internet **106** to the content server **102**, where the content is received by a content module **112**. The content module **112** may be configured to receive, process, and store content. In one embodiment, processed content is accessed by a client module **114** configured to play the content on the end user station **104**. In a further embodiment, the client module **114** is configured to receive different portions of a content stream from a plurality of locations simultaneously. For example, the client module **114** may request and receive content from any of the plurality of web servers **116**.

Content from the content server **102** may be replicated to other web servers **116** or alternatively to proxy cache servers **118**. Replicating may occur by deliberate forwarding from the content server **102**, or by a web, cache, or proxy server outside of the content server **102** asking for content on behalf of the client module **114**. In a further embodiment, content may be forwarded directly to web **116** or proxy **118** servers through direct communication channels **120** without the need to traverse the Internet **106**.

FIG. **2***a* is a schematic block diagram graphically illustrating one embodiment of a media content (hereinafter "content") file **200**. In one embodiment, the content file **200** is distributed by the publisher **110**. The content file **200** may comprise a television broadcast, sports event, movie, music, concert, etc. The content file **200** may also be live or archived content. The content file **200** may comprise uncompressed video and audio, or alternatively, video or audio. Alternatively, the content file **200** may be compressed using standard or proprietary encoding schemes. Examples of encoding schemes capable of use with the present invention include, but are not limited to, DivX®, Windows Media Video®, Quicktime Sorenson 3®, On2, OGG Vorbis, MP3, or Quicktime 6.5/MPEG-4® encoded content.

FIG. **2***b* is a schematic block diagram illustrating one embodiment of a plurality of streams **202** having varying degrees of quality and bandwidth. In one embodiment, the plurality of streams **202** comprises a low quality stream **204**, a medium quality stream **206**, and a high quality stream **208**. Each of the streams **204**, **206**, **208** is a copy of the content file **200** encoded and compressed to varying bit rates. For example, the low quality stream **204** may be encoded and compressed to a bit rate of 100 kilobits per second (kbps), the medium quality stream **206** may be encoded and compressed to a bit rate of 200 kbps, and the high quality stream **208** may be encoded and compressed to 600 kbps.

FIG. **3***a* is a schematic block diagram illustrating one embodiment of a stream **302** divided into a plurality of source streamlets **303**. As used herein, streamlet refers to any sized portion of the content file **200**. Each streamlet **303** may comprise a portion of the content contained in stream **302**, encapsulated as an independent media object. The content in a streamlet **303** may have a unique time index in relation to the beginning of the content contained in stream **302**. In one embodiment, the content contained in each streamlet **303** may have a duration of two seconds. For example, streamlet 0 may have a time index of 00:00 representing the beginning of content playback, and streamlet 1 may have a time index of 00:02, and so on. Alternatively, the time duration of the streamlets **304** may be any duration smaller than the entire playback duration of the content in stream **302**. In a further embodiment, the streamlets **303** may be divided according to file size instead of a time index and duration.

FIG. **3***b* is a schematic block diagram illustrating one embodiment of sets **306** of streamlets in accordance with the present invention. As used herein, the term "set" refers to a group of streamlets having identical time indices and durations but varying bitrates. In the depicted embodiment, the set **306***a* encompasses all streamlets having a time index of 00:00. The set **306***a* includes encoded streamlets **304** having low, medium, and high **204**, **206**, **208** bitrates. Of course each set **306** may include more than the depicted three bitrates which are given by way of example only. One skilled in the art will recognize that any number of streams having different bitrates may be generated from the original content **200**.

As described above, the duration of one streamlet **304** may be approximately two seconds. Likewise each set **306** may comprise a plurality of streamlets **304** where each streamlet **304** has a playable duration of two seconds. Alternatively, the duration of the streamlet **304** may be predetermined or dynamically variable depending upon a variety of factors including, but not limited to, network congestion, system specifications, playback resolution and quality, etc. In the depicted embodiment, the content **200** may be formed of the plurality of sets **306**. The number of sets **306** may depend on the length of the content **200** and the length or duration of each streamlet **304**.

FIG. **4** is a schematic block diagram illustrating in greater detail one embodiment of the content module **112** in accordance with the present invention. The content module **112** may comprise a capture module **402**, a streamlet module **404**, an encoder module **406**, a streamlet database **408**, and the web server **116**. In one embodiment, the capture module **402** is configured to receive the content file **200** from the publisher **110**. The capture module **402** may be configured to "decompress" the content file **200**. For example, if the content file **200** arrives having been encoded with one of the above described encoding schemes, the capture module **402** may convert the content file **200** into raw audio and/or video. Alternatively, the content file **200** may be transmitted by the publisher in a format **110** that does not require decompression.

The capture module **402** may comprise a capture card configured for TV and/or video capture. One example of a capture card suitable for use in the present invention is the DRC-2500 by Digital Rapids of Ontario, Canada. Alternatively, any capture card capable of capturing audio and video may be utilized with the present invention. In a further embodiment, the capture module **402** is configured to pass the content file to the streamlet module **404**.

The streamlet module **404**, in one embodiment, is configured to segment the content file **200** and generate source streamlets **303** that are not encoded. As used herein, the term "segment" refers to an operation to generate a streamlet of the content file **200** having a duration or size equal to or less than the duration or size of the content file **200**. The streamlet module **404** may be configured to segment the content file **200** into streamlets **303** each having an equal duration. Alternatively, the streamlet module **404** may be configured to segment the content file **200** into streamlets **303** having equal file sizes.

The encoding module **406** is configured to receive the source streamlets **303** and generate the plurality of streams **202** of varying qualities. The original content file **200** from the publisher may be digital in form and may comprise content having a high bit rate such as, for example, 2 mbps. The content may be transferred from the publisher **110** to the content module **112** over the Internet **106**. Such transfers of data are well known in the art and do not require further discussion herein. Alternatively, the content may comprise a captured broadcast.

In a further embodiment, the encoding module **406** is configured to generate a plurality of sets **306** of streamlets **304**. The sets **306**, as described above with reference to FIG. **3***b*, may comprise streamlets having an identical time index and duration, and a unique bitrate. As with FIG. **3***b*, the sets **306** and subsequently the plurality of streams **202** may comprise the low quality stream **204**, the medium quality stream **206**, and the high quality stream **208**. Alternatively, the plurality of streams **202** may comprise any number of streams deemed necessary to accommodate end user bandwidth.

The encoder module **406** is further configured to encode each source streamlet **303** into the plurality of streams **202** and streamlet sets **306** and store the streamlets in the streamlet database **408**. The encoding module **406** may utilize encoding schemes such as DivX®, Windows Media Video 9®, Quicktime 6.5 Sorenson 3®, or Quicktime 6.5/MPEG-4®. Alternatively, a custom encoding scheme may be employed.

The content module **112** may also include a metadata module **412** and a metadata database **414**. In one embodiment, metadata comprises static searchable content information. For example, metadata includes, but is not limited to, air date of the content, title, actresses, actors, length, and episode name. Metadata is generated by the publisher **110**, and may be configured to define an end user environment. In one embodiment, the publisher **100** may define an end user navigational environment for the content including menus, thumbnails, sidebars, advertising, etc. Additionally, the publisher **110** may define functions such as fast forward, rewind, pause, and play that may be used with the content file **200**. The metadata module **412** is configured to receive the metadata from the publisher **110** and store the metadata in the metadata database **414**. In a further embodiment, the metadata module **412** is configured to interface with the client module **114**, allowing the client module **114** to search for content based upon at least one of a plurality of metadata criteria. Additionally, metadata may be generated by the content module **112** through automated process(es) or manual definition.

Once the streamlets **304** have been received and processed, the client module **114** may request streamlets **304** using HTTP from the web server **116**. Using a standard protocol such as HTTP eliminates the need for network administrators to configure firewalls to recognize and pass through network traffic for a new, specialized protocol. Additionally, since the client module **114** initiates the request, the web server **116** is only required to retrieve and serve the requested streamlet **304**. In a further embodiment, the client module **114** may be configured to retrieve streamlets **304** from a plurality of web servers **116**.

Each web server **116** may be located in various locations across the Internet **106**. The streamlets **304** may essentially be static files. As such, no specialized media server or server-side intelligence is required for a client module **114** to retrieve streamlets **304**. Streamlets **304** may be served by the web server **116** or cached by cache servers of Internet Service Providers (ISPs), or any other network infrastructure operators, and served by the cache server. Use of cache servers is well known to those skilled in the art, and will not be discussed further herein. Thus, a highly scalable solution is provided that is not hindered by massive amounts of client module **114** requests to the web server **116** at any specific location, especially the web server **116** most closely associated with or within the content module **112**

FIG. **5***a* is a schematic block diagram illustrating one embodiment of an encoder module **406** in accordance with the present invention. In one embodiment, the encoder module **406** may include a master module **502** and a plurality of host computing modules (hereinafter "host") **504**. The hosts **504** may comprise personal computers, servers, etc. In a further embodiment, the hosts **504** may be dedicated hardware, for example, cards plugged into a single computer.

The master module (hereinafter "master") **502** is configured to receive streamlets **303** from the streamlet module **404** and stage the streamlet **303** for processing. In one embodiment, the master **502** may decompress each source streamlet **303** to produce a raw streamlet. As used herein, the term "raw streamlet" refers to a streamlet **303** that is uncompressed or lightly compressed to substantially reduce size with no significant loss in quality. A lightly compressed raw streamlet can be transmitted more quickly and to more hosts. Each host **504** is coupled with the master **502** and configured to receive a raw streamlet from the master **502** for encoding. The hosts **504**, in one example, generate a plurality of streamlets **304** having identical time indices and durations, and varying bitrates. Essentially each host **504** may be configured to generate a set **306** from the raw streamlet **503** sent from the master **502**. Alternatively, each host **504** may be dedicated to producing a single bitrate in order to reduce the time required for encoding.

Upon encoding completion, the host **504** returns the set **306** to the master **502** so that the encoding module **406** may store the set **306** in the streamlet database **408**. The master **502** is further configured to assign encoding jobs to the hosts **504**. Each host is configured to submit an encoding job completion bid (hereinafter "bid"). The master **502** assigns encoding jobs depending on the bids from the hosts **504**. Each host **504** generates a bid depending upon a plurality of computing variables which may include, but are not limited to, current encoding job completion percentage, average job completion time, processor speed and physical memory capacity.

For example, a host **504** may submit a bid that indicates that based on past performance history the host **504** would be able to complete the encoding job in 15 seconds. The master **502** is configured to select from among a plurality of bids the best bid and subsequently submit the encoding job to the host **504** with the best bid. As such, the described encoding system does not require that each host **504** have identical hardware but beneficially takes advantage of the available computing power of the hosts **504**. Alternatively, the master **502** selects the host **504** based on a first come first serve basis, or some other algorithm deemed suitable for a particular encoding job.

The time required to encode one streamlet **304** is dependent upon the computing power of the host **504**, and the encoding requirements of the content file **200**. Examples of encoding requirements may include, but are not limited to, two or multi-pass encoding, and multiple streams of different bitrates. One benefit of the present invention is the ability to perform two-pass encoding on a live content file **200**. Typically, in order to perform two-pass encoding prior art systems must wait for the content file to be completed before encoding.

The present invention, however, segments the content file **200** into source streamlets **303** and the two-pass encoding to a plurality of streams **202** may be performed on each corresponding raw streamlet without waiting for a TV show to end, for example. As such, the content module **112** is capable of streaming the streamlets over the Internet shortly after the content module **112** begins capture of the content file **200**. The delay between a live broadcast transmitted from the publisher **110** and the availability of the content depends on the computing power of the hosts **504**.

FIG. **5***b* is a schematic block diagram illustrating one embodiment of parallel encoding of streamlets in accordance with the present invention. In one example, the capture module **402** (of FIG. **4**) begins to capture the content file and the streamlet module **404** generates a first streamlet **303***a* and passes the streamlet to the encoding module **406**. The encoding module **406** may take 10 seconds, for example, to generate the first set **306***a* of streamlets **304***a* (**304***a***1**, **304***a***2**, **304***a***3**, etc. represent streamlets **304** of

different bitrates). FIG. **5***b* illustrates the encoding process generically as block **502** to graphically illustrate the time duration required to process a raw or lightly encoded streamlet **303** as described above with reference to the encoding module **406**. The encoding module **406** may simultaneously process more than one streamlet **303**, and processing of streamlets will begin upon arrival of the streamlet from the capture module **402**.

During the 10 seconds required to encode the first streamlet **303***a*, the streamlet module **404** has generated five additional 2-second streamlets **303***b*, **303***c*, **303***d*, **303***e*, **303***f*, for encoding and the master **502** has prepared and staged the corresponding raw streamlets. Two seconds after the first set **306***a* is available the next set **306***b* is available, and so on. As such, the content file **200** is encoded for streaming over the Internet and appears live. The 10 second delay is given herein by way of example only. Multiple hosts **504** may be added to the encoding module **406** in order to increase the processing capacity of the encoding module **406**. The delay may be shortened to an almost unperceivable level by the addition of high CPU powered systems, or alternatively multiple low powered systems.

A system as described above beneficially enables multi-pass encoding of live events. Multi-pass encoding systems of the prior art require that the entire content be captured (or be complete) because in order to perform multi-pass encoding the entire content must be scanned and processed more than once. This is impossible with prior art systems because content from a live event is not complete until the event is over. As such, with prior art systems, multi-pass encoding can only be performed once the event is over. Streamlets, however, may be encoded as many times as is deemed necessary. Because the streamlet is an encapsulated media object of 2 seconds (for example), multi-pass encoding may begin on a live event once the first streamlet is captured. Shortly after multi-pass encoding of the first streamlet **303***a* is finished, multi-pass encoding of the second streamlet **303***b* finishes, and as such multi-pass encoding is performed on a live event and appears live to a viewer.

Any specific encoding scheme applied to a streamlet may take longer to complete than the time duration of the streamlet itself, for example, a very high quality encoding of a 2-second streamlet may take 5 seconds to finish. Alternatively, the processing time required for each streamlet may be less than the time duration of a streamlet. However, because the offset parallel encoding of successive streamlets are encoded by the encoding module at regular intervals (matching the intervals at which the those streamlets are submitted to the encoding module **406**, for example 2 seconds) the output timing of the encoding module **406** does not fall behind the real-time submission rate of the unencoded streamlets. Conversely, prior art encoding systems rely on the very fastest computing hardware and software because the systems must generate the output immediately in lock-step with the input. A prior art system that takes 2.1 seconds to encode 2 seconds worth of content is considered a failure. The present invention allows for slower than real-time encoding processes yet still achieves a real-time encoding effect due to the parallel offset pipes.

The parallel offset pipeline approach described with reference to FIG. **5***b* beneficially allows for long or short encoding times without "falling behind" the live event. Additionally, arbitrarily complex encoding of streamlets to multiple profiles and optimizations only lengthens the encoding time **502** without a perceptible difference to a user because the sets **306** of streamlets **304** are encoded in a time-selective manner so that streamlets are processed at regular time intervals and transmitted at these time intervals.

Returning now to FIG. **5***a*, as depicted, the master **502** and the hosts **504** may be located within a single local area network, or in other terms, the hosts **504** may be in close physical proximity to the master **502**. Alternatively, the hosts **504** may receive encoding jobs from the master **502** over the Internet or other communications network. For example, consider a live sports event in a remote location where it would be difficult to setup multiple hosts. In this example, a master performs no encoding or alternatively light encoding before publishing the streamlets online. The hosts **504** would then retrieve those streamlets and encode the streamlets into the multiple bitrate sets **306** as described above.

Furthermore, hosts **504** may be dynamically added or removed from the encoding module without restarting the encoding job and/or interrupting the publishing of streamlets. If a host **504** experiences a crash or some failure, its encoding work is simply reassigned to another host.

The encoding module **406**, in one embodiment, may also be configured to produce streamlets that are specific to a particular playback platform. For example, for a single raw streamlet, a single host **504** may produce streamlets for different quality levels for personal computer playback, streamlets for playback on cell phones with a different, proprietary codec, a small video-only streamlet for use when playing just a thumbnail view of the stream (like in a programming guide), and a very high quality streamlet for use in archiving.

FIG. **6***a* is a schematic block diagram illustrating one embodiment of a virtual timeline **600** in accordance with the present invention. In one embodiment, the virtual timeline **600** comprises at least one quantum media extension **602**. The quantum media extension (hereinafter "QMX") **602** describes an entire content file **200**. Therefore, the virtual timeline (hereinafter "VT") **600** may comprise a file that is configured to define a playlist for a user to view. For example, the VT may indicate that the publisher desires a user to watch a first show QMX **602***a* followed by QMX **602***b* and QMX **602***c*. As such, the publisher may define a broadcast schedule in a manner similar to a television station.

FIG. **6***b* is a schematic block diagram illustrating an alternative embodiment of a VT **600** in accordance with the present invention. In the depicted embodiment, the VT **600** may include a single QMX **602** which indicates that the publisher desires the same content to be looped over and over again. For example, the publisher may wish to broadcast a never-ending infomercial on a website.

FIG. **6***c* is a schematic block diagram illustrating one embodiment of a QMX **602** in accordance with the present invention. In one embodiment, the QMX **602** contains a multitude of information generated by the content module **112** configured to describe the content file **200**. Examples of information include, but are not limited to, start index **604**, end index **606**, whether the content is live **608**, proprietary publisher data **610**, encryption level **612**, content duration **614** and bitrate values **616**. The bitrate values **616** may include frame size **618**, audio channel **620** information, codecs **622** used, sample rate **624**, and frames parser **626**.

A publisher may utilize the QVT **600** together with the QMX **602** in order to prescribe a playback order for users, or alternatively selectively edit content. For example, a publisher may indicate in the QMX **602** that audio should be muted at time index 10:42 or video should be skipped for 3 seconds at time index 18:35. As such, the publisher may

selectively skip offensive content without the processing requirements of editing the content.

FIG. **7** is a schematic block diagram graphically illustrating one embodiment of a client module **114** in accordance with the present invention. The client module **114** may comprise an agent controller module **702**, a streamlet cache module **704**, and a network controller module **706**. In one embodiment, the agent controller module **702** is configured to interface with a viewer **708**, and transmit streamlets **304** to the viewer **708**. Alternatively, the agent controller module **702** may be configured to simply reassemble streamlets into a single file for transfer to an external device such as a portable video player.

In a further embodiment, the client module **114** may comprise a plurality of agent controller modules **702**. Each agent controller module **702** may be configured to interface with one viewer **708**. Alternatively, the agent controller module **702** may be configured to interface with a plurality of viewers **708**. The viewer **708** may be a media player (not shown) operating on a PC or handheld electronic device.

The agent controller module **702** is configured to select a quality level of streamlets to transmit to the viewer **708**. The agent controller module **702** requests lower or higher quality streams based upon continuous observation of time intervals between successive receive times of each requested streamlet. The method of requesting higher or lower quality streams will be discussed in greater detail below with reference to FIG. **10**.

The agent controller module **702** may be configured to receive user commands from the viewer **708**. Such commands may include play, fast forward, rewind, pause, and stop. In one embodiment, the agent controller module **702** requests streamlets **304** from the streamlet cache module **704** and arranges the received streamlets **304** in a staging module **709**. The staging module **709** may be configured to arrange the streamlets **304** in order of ascending playback time. In the depicted embodiment, the streamlets **304** are numbered 0, 1, 2, 3, 4, etc. However, each streamlet **304** may be identified with a unique filename.

Additionally, the agent controller module **702** may be configured to anticipate streamlet **304** requests and pre-request streamlets **304**. By pre-requesting streamlets **304**, the user may fast-forward, skip randomly, or rewind through the content and experience no buffering delay. In a further embodiment, the agent controller module **702** may request the streamlets **304** that correspond to time index intervals of 30 seconds within the total play time of the content. Alternatively, the agent controller module **702** may request streamlets at any interval less than the length of the time index. This enables a "fast-start" capability with no buffering wait when starting or fast-forwarding through content file **200**. In a further embodiment, the agent controller module **702** may be configured to pre-request streamlets **304** corresponding to specified index points within the content or within other content in anticipation of the end user **104** selecting new content to view. In one embodiment, the streamlet cache module **704** is configured to receive streamlet **304** requests from the agent controller module **702**. Upon receiving a request, the streamlet cache module **704** first checks a streamlet cache **710** to verify if the streamlet **304** is present. In a further embodiment, the streamlet cache module **704** handles streamlet **304** requests from a plurality of agent controller modules **702**. Alternatively, a streamlet cache module **704** may be provided for each agent controller module **702**. If the requested streamlet **304** is not present in the streamlet cache **410**, the request is passed to the network controller module **706**. In order to enable fast forward and rewind capabilities, the streamlet cache module **704** is configured to store the plurality of streamlets **304** in the streamlet cache **710** for a specified time period after the streamlet **304** has been viewed. However, once the streamlets **304** have been deleted, they may be requested again from the web server **116**.

The network controller module **706** may be configured to receive streamlet requests from the streamlet cache module **704** and open a connection to the web server **116** or other remote streamlet **304** database (not shown). In one embodiment, the network controller module **706** opens a TCP/IP connection to the web server **116** and generates a standard HTTP GET request for the requested streamlet **304**. Upon receiving the requested streamlet **304**, the network controller module **706** passes the streamlet **304** to the streamlet cache module **704** where it is stored in the streamlet cache **710**. In a further embodiment, the network controller module **706** is configured to process and request a plurality of streamlets **304** simultaneously. The network controller module **706** may also be configured to request a plurality of streamlets, where each streamlet **304** is subsequently requested in multiple parts.

In a further embodiment, streamlet requests may comprise requesting pieces of any streamlet file. Splitting the streamlet **304** into smaller pieces or portions beneficially allows for an increased efficiency potential, and also eliminates problems associated with multiple full-streamlet requests sharing the bandwidth at any given moment. This is achieved by using parallel TCP/IP connections for pieces of the streamlets **304**. Consequently, efficiency and network loss problems are overcome, and the streamlets arrive with more useful and predictable timing.

In one embodiment, the client module **114** is configured to use multiple TCP connections between the client module **114** and the web server **116** or web cache. The intervention of a cache may be transparent to the client or configured by the client as a forward cache. By requesting more than one streamlet **304** at a time in a manner referred to as "parallel retrieval," or more than one part of a streamlet **304** at a time, efficiency is raised significantly and latency is virtually eliminated. In a further embodiment, the client module allows a maximum of three outstanding streamlet **304** requests. The client module **114** may maintain additional open TCP connections as spares to be available should another connection fail. Streamlet **304** requests are rotated among all open connections to keep the TCP flow logic for any particular connection from falling into a slow-start or close mode. If the network controller module **706** has requested a streamlet **304** in multiple parts, with each part requested on mutually independent TCP/IP connections, the network controller module **706** reassembles the parts to present a complete streamlet **304** for use by all other components of the client module **114**.

When a TCP connection fails completely, a new request may be sent on a different connection for the same streamlet **304**. In a further embodiment, if a request is not being satisfied in a timely manner, a redundant request may be sent on a different connection for the same streamlet **304**. If the first streamlet request's response arrives before the redundant request response, the redundant request can be aborted. If the redundant request response arrives before the first request response, the first request may be aborted.

Several streamlet **304** requests may be sent on a single TCP connection, and the responses are caused to flow back in matching order along the same connection. This eliminates all but the first request latency. Because multiple responses are always being transmitted, the processing

latency of each new streamlet **304** response after the first is not a factor in performance. This technique is known in the industry as "pipelining." Pipelining offers efficiency in request-response processing by eliminating most of the effects of request latency. However, pipelining has serious vulnerabilities. Transmission delays affect all of the responses. If the single TCP connection fails, all of the outstanding requests and responses are lost. Pipelining causes a serial dependency between the requests.

Multiple TCP connections may be opened between the client module **114** and the web server **116** to achieve the latency-reduction efficiency benefits of pipelining while maintaining the independence of each streamlet **304** request. Several streamlet **304** requests may be sent concurrently, with each request being sent on a mutually distinct TCP connection. This technique is labeled "virtual pipelining" and is an innovation of the present invention. Multiple responses may be in transit concurrently, assuring that communication bandwidth between the client module **114** and the web server **116** is always being utilized. Virtual pipelining eliminates the vulnerabilities of traditional pipelining. A delay in or complete failure of one response does not affect the transmission of other responses because each response occupies an independent TCP connection. Any transmission bandwidth not in use by one of multiple responses (whether due to delays or TCP connection failure) may be utilized by other outstanding responses.

A single streamlet **304** request may be issued for an entire streamlet **304**, or multiple requests may be issued, each for a different part or portion of the streamlet. If the streamlet is requested in several parts, the parts may be recombined by the client module **114** streamlet.

In order to maintain a proper balance between maximized bandwidth utilization and response time, the issuance of new streamlet requests must be timed such that the web server **116** does not transmit the response before the client module **114** has fully received a response to one of the previously outstanding streamlet requests. For example, if three streamlet **304** requests are outstanding, the client module **114** should issue the next request slightly before one of the three responses is fully received and "out of the pipe." In other words, request timing is adjusted to keep three responses in transit. Sharing of bandwidth among four responses diminishes the net response time of the other three responses. The timing adjustment may be calculated dynamically by observation, and the request timing adjusted accordingly to maintain the proper balance of efficiency and response times.

The schematic flow chart diagrams that follow are generally set forth as logical flow chart diagrams. As such, the depicted order and labeled steps are indicative of one embodiment of the presented method. Other steps and methods may be conceived that are equivalent in function, logic, or effect to one or more steps, or portions thereof, of the illustrated method. Additionally, the format and symbols employed are provided to explain the logical steps of the method and are understood not to limit the scope of the method. Although various arrow types and line types may be employed in the flow chart diagrams, they are understood not to limit the scope of the corresponding method. Indeed, some arrows or other connectors may be used to indicate only the logical flow of the method. For instance, an arrow may indicate a waiting or monitoring period of unspecified duration between enumerated steps of the depicted method. Additionally, the order in which a particular method occurs may or may not strictly adhere to the order of the corresponding steps shown.

FIG. **8** is a schematic flow chart diagram illustrating one embodiment of a method **800** for processing content in accordance with the present invention. In one embodiment the method **800** starts **802**, and the content module **112** receives **804** content from the publisher **110**. Receiving content **804** may comprise receiving **804** a digital copy of the content file **200**, or digitizing a physical copy of the content file **200**. Alternatively, receiving **804** content may comprise capturing a radio, television, cable, or satellite broadcast. Once received **804**, the streamlet module **404** generates **808** a plurality of source streamlets **303** each having a fixed duration. Alternatively, the streamlets **303** may be generated with a fixed file size.

In one embodiment, generating **808** streamlets comprises dividing the content file **200** into a plurality of two second streamlets **303**. Alternatively, the streamlets may have any length less than or equal to the length of the stream **202**. The encoder module **406** then encodes **810** the streamlets **303** into sets **306** of streamlets **304**, in a plurality of streams **202** according to an encoding scheme. The quality may be predefined, or automatically set according to end user bandwidth, or in response to pre-designated publisher guidelines

In a further embodiment, the encoding scheme comprises a proprietary codec such as WMV9®. The encoder module **406** then stores **812** the encoded streamlets **304** in the streamlet database **408**. Once stored **812**, the web server **116** may then serve **814** the streamlets **304**. In one embodiment, serving **814** the streamlets **304** comprises receiving streamlet requests from the client module **114**, retrieving the requested streamlet **304** from the streamlet database **408**, and subsequently transmitting the streamlet **304** to the client module **114**. The method **800** then ends **816**.

FIG. **9** is a schematic flow chart diagram illustrating one embodiment of a method **900** for viewing a plurality of streamlets in accordance with the present invention. The method **900** starts and an agent controller module **702** is provided **904** and associated with a viewer **708** and provided with a staging module **709**. The agent controller module **702** then requests **906** a streamlet **304** from the streamlet cache module **704**. Alternatively, the agent controller module **702** may simultaneously request **906** a plurality of streamlets **304** the streamlet cache module **704**. If the streamlet is stored **908** locally in the streamlet cache **710**, the streamlet cache module **704** retrieves **910** the streamlet **304** and sends the streamlet to the agent controller module **702**. Upon retrieving **910** or receiving a streamlet, the agent controller module **702** makes **911** a determination of whether or not to shift to a higher or lower quality stream **202**. This determination will be described below in greater detail with reference to FIG. **10**.

In one embodiment, the staging module **709** then arranges **912** the streamlets **304** into the proper order, and the agent controller module **702** delivers **914** the streamlets to the viewer **708**. In a further embodiment, delivering **914** streamlets **304** to the end user comprises playing video and or audio streamlets on the viewer **708**. If the streamlets **304** are not stored **908** locally, the streamlet request is passed to the network controller module **706**. The network controller module **706** then requests **916** the streamlet **304** from the web server **116**. Once the streamlet **304** is received, the network controller module **706** passes the streamlet to the streamlet cache module **704**. The streamlet cache module **704** archives **918** the streamlet. Alternatively, the streamlet cache module **704** then archives **918** the streamlet and passes the streamlet to the agent controller module **702**, and the method **900** then continues from operation **910** as described above.

Referring now to FIG. **10**, shown therein is a schematic flow chart diagram illustrating one embodiment of a method **1000** for requesting streamlets **304** within an adaptive-rate shifting content streaming environment in accordance with the present invention. The method **1000** may be used in one embodiment as the operation **911** of FIG. **9**. The method **1000** starts and the agent controller module **702** receives **1004** a streamlet **304** as described above with reference to FIG. **9**. The agent controller module **702** then monitors **1006** the receive time of the requested streamlet. In one embodiment, the agent controller module **702** monitors the time intervals A between successive receive times for each streamlet response. Ordering of the responses in relation to the order of their corresponding requests is not relevant.

Because network behavioral characteristics fluctuate, sometimes quite suddenly, any given Δ may vary substantially from another. In order to compensate for this fluctuation, the agent controller module **702** calculates **1008** a performance ratio r across a window of n samples for streamlets of playback length S. In one embodiment, the performance ratio r is calculated using the equation:

$$r = S\frac{n}{\sum_{i=1}^{n}\Delta_i}$$

Due to multiple simultaneous streamlet processing, and in order to better judge the central tendency of the performance ratio r, the agent controller module **702** may calculate a geometric mean, or alternatively an equivalent averaging algorithm, across a window of size m, and obtain a performance factor φ:

$$\varphi_{current} = \left(\prod_{j=1}^{m} r_j\right)^{\frac{1}{m}}$$

The policy determination about whether or not to upshift **1010** playback quality begins by comparing $\varphi_{current}$ with a trigger threshold Θ_{up}. If $\varphi_{current} \geq \Theta_{up}$, then an up shift to the next higher quality stream may be considered **1016**. In one embodiment, the trigger threshold Θ_{up} is determined by a combination of factors relating to the current read ahead margin (i.e. the amount of contiguously available streamlets that have been sequentially arranged by the staging module **709** for presentation at the current playback time index), and a minimum safety margin. In one embodiment, the minimum safety margin may be 24 seconds. The smaller the read ahead margin, the larger Θ_{up} is to discourage upshifting until a larger read ahead margin may be established to withstand network disruptions. If the agent controller module **702** is able to sustain **1016** upshift quality, then the agent controller module **702** will upshift **1017** the quality and subsequently request higher quality streams. The determination of whether use of the higher quality stream is sustainable **1016** is made by comparing an estimate of the higher quality stream's performance factor, φ_{higher}, with Θ_{up}. If $\varphi_{higher} \geq \Theta_{up}$ then use of the higher quality stream is considered sustainable. If the decision of whether or not the higher stream rate is sustainable **1016** is "no," the agent controller module **702** will not attempt to upshift **1017** stream quality. If the end of the stream has been reached **1014**, the method **1000** ends **1016**.

If the decision on whether or not to attempt upshift **1010** is "no", a decision about whether or not to downshift **1012** is made. In one embodiment, a trigger threshold Θ_{down} is defined in a manner analogous to Θ_{up}. If $\varphi_{current} > \Theta_{down}$ then the stream quality may be adequate, and the agent controller module **702** does not downshift **1018** stream quality. However, if $\varphi_{current} \leq \Theta_{down}$, the agent controller module **702** does downshift **1018** the stream quality. If the end of the stream has not been reached **1014**, the agent controller module **702** begins to request and receive **1004** lower quality streamlets and the method **1000** starts again. Of course, the above described equations and algorithms are illustrative only, and may be replaced by alternative streamlet monitoring solutions.

The present invention may be embodied in other specific forms without departing from its spirit or essential characteristics. The described embodiments are to be considered in all respects only as illustrative and not restrictive. The scope of the invention is, therefore, indicated by the appended claims rather than by the foregoing description. All changes which come within the meaning and range of equivalency of the claims are to be embraced within their scope.

What is claimed is:

1. A system for adaptive-rate content streaming of a video that is playable on one or more end user stations over the internet, the system comprising:

at least one storage device storing the video, wherein the video is digitally encoded at a plurality of different bitrates creating a plurality of streams including a low quality stream, a medium quality stream, and a high quality stream, the low quality stream, the medium quality stream, and the high quality stream each comprising a group of streamlets, wherein each streamlet corresponds to a portion of the video, and wherein each streamlet in each group of streamlets is encoded at a respective one of the plurality of different bitrates, and wherein each group of streamlets comprises at least first and second streamlets;

wherein at least one of the low quality stream, the medium quality stream, and the high quality stream is encoded at a bitrate of no less than 600 kbps; and

wherein the first streamlet of each of the groups of streamlets has the same first duration and encodes the same first portion of the video in each of the low quality stream, the medium quality stream, and the high quality stream, and wherein the first streamlet of the low quality stream encodes the same first portion of the video at a lower bitrate than the first streamlet of the high quality stream and the first streamlet of the medium quality stream.

2. The system of claim **1**, wherein the video is a live event video.

3. The system of claim **1**, wherein the video includes archived content.

4. The system of claim **1**, wherein the second streamlet of each of the groups of streamlets each has the same second duration and corresponds to the same second portion of the video in the low quality stream, the medium quality stream, and the high quality stream, the second streamlet of the low quality stream having the same bitrate as the first streamlet of the low quality stream.

5. The system of claim **4**, wherein the first and second durations are different.

6. The system of claim **1**, further comprising: a plurality of web servers located at different locations across the internet, each web server configured to: receive at least one streamlet request over one or more internet connections

from a respective one of the one or more end user stations to retrieve the first streamlet, wherein the at least one streamlet request from the respective one of the one or more end user stations includes a request for a currently selected first streamlet from one of the low quality stream, the medium quality stream, and the high quality stream based upon a determination by the respective one of the one or more end user stations to select a higher or lower bitrate version of a respective one of the plurality of streams; retrieve from the at least one storage device the requested first streamlet from the currently selected one of the low quality stream, the medium quality stream, and the high quality stream; and send the retrieved first streamlet to the respective one of the one or more end user stations over the one or more internet connections.

7. The system of claim **1**, wherein each of the first streamlets has a first duration that is the range of 0.1 to 5 seconds.

8. The system of claim **1**, further comprising:

a first web server configured to: receive at least one streamlet request over one or more internet connections from the one or more end user stations to retrieve the first streamlet storing the first portion of the video,

wherein the at least one streamlet request from the one or more end user stations includes a request for a currently selected first streamlet from one of the low quality stream, the medium quality stream, and the high quality stream based upon a determination by the end user station to select a higher or lower bitrate version of the video; retrieve from the storage device the requested first streamlet from the currently selected one of the low quality stream, the medium quality stream, and the high quality stream; and send the retrieved first streamlet from the currently selected one of the low quality stream, the medium quality stream, and the high quality stream to the requesting one of the end user stations over the one or more network connections.

9. The system of claim **8**, wherein the first web server is further configured to: receive at least one virtual timeline request over the one or more internet connections from the one or more end user stations to retrieve a virtual timeline; and send the virtual timeline to the requesting one of the end user stations over the one or more network connections.

10. The system of claim **9**, wherein the virtual timeline corresponds to the currently selected one of the low quality stream, the medium quality stream, and the high quality stream.

11. The system of claim **10**, wherein the virtual timeline defines a playlist for a user to view.

12. The system of claim **11**, wherein the virtual timeline comprises a file that is configured to define a playlist for a user to view.

13. The system of claim **12**, wherein the virtual timeline comprises at least one quantum media extension (QMX).

14. An end user station to stream a video over a network from a server for playback of the video, the end user station comprising:

a processor;

a digital processing apparatus memory device comprising non-transitory machine-readable instructions that, when executed, cause the processor to:

establish an internet connection between the end user station and the server, wherein the server is configured to access at least one of a plurality of groups of streamlets;

wherein the video is encoded at a plurality of different bitrates to create a plurality of streams including at least a low quality stream, a medium quality stream, and a high quality stream, each of the low quality stream, the medium quality stream, and the high quality stream comprising a group of streamlets encoded at the same respective one of the different bitrates, each group comprising at least first and second streamlets, each of the streamlets corresponding to a portion of the video;

wherein at least one of the low quality stream, the medium quality stream, and the high quality stream is encoded at a bitrate of no less than 600 kbps; and wherein the first streamlets of each of the low quality stream, the medium quality stream and the high quality stream each has an equal playback duration and each of the first streamlets encodes the same portion of the video at a different one of the different bitrates;

select a specific one of the low quality stream, the medium quality stream, and the high quality stream based upon a determination by the end user station to select a higher or lower bitrate version of the streams;

place a streamlet request to the server over the internet connection for the first streamlet of the selected stream;

receive the requested first streamlet from the server via the internet connection; and

provide the received first streamlet for playback of the video.

15. The end user station of claim **14**, wherein the second streamlet of each of the groups of streamlets each has the same second duration and corresponds to the same second portion of the video in the low quality stream, the medium quality stream, and the high quality stream, the second streamlet of the low quality stream having the same bitrate as the first streamlet of the low quality stream.

16. The end user station of claim **15**, wherein the first and second durations are different.

17. The end user station of claim **14**, wherein each of the first streamlets has a first duration that is in the range of 0.1 to 5 seconds.

18. The end user station of claim **14**, wherein the end user station is further configured to: request and receive a virtual timeline; and wherein one or more streamlet requests are based on the received virtual timeline.

19. The end user station of claim **18**, wherein the virtual timeline corresponds to the currently selected one of the low quality stream, the medium quality stream, and the high quality stream.

20. The end user station of claim **18**, wherein the virtual timeline defines a playlist for a user to view.

21. The end user station of claim **14**, wherein the video is a live event video.

22. The end user station of claim **14**, wherein the video includes archived content.

23. A process executable by one or more servers to stream a video for playback by one or more end user stations, the process comprising:

storing, by the one or more servers, a plurality of streams including a low quality stream, a medium quality stream, and a high quality stream, wherein the low quality stream, the medium quality stream, and the high quality stream each comprise a group of streamlets encoded at a respective one of a plurality of different bitrates, each group comprising at least first and second streamlets, each of the streamlets corresponding to a portion of the video;

wherein at least one of the low quality stream, the medium quality stream, and the high quality stream is encoded at a bitrate of no less than 600 kbps; and wherein the first streamlet of each of the groups of streamlets has the same first duration and encodes the same first portion of the video in the low quality stream, the medium quality stream, and the high quality stream, the first streamlet of the low quality stream having a different one of the different bitrates than the first streamlet of the high quality stream and the first streamlet of the medium quality stream;

receiving at least one streamlet request over an internet connection from a respective one of the one or more end user stations to retrieve the first streamlet storing the first portion of the video,

wherein the at least one streamlet request from the respective one of the one or more end user stations includes a request for a currently selected first streamlet from one of the low quality stream, the medium quality stream, and the high quality stream based upon a determination by the respective one of the one or more end user stations to select a higher or lower bitrate version of the video;

retrieving from the one or more servers the requested first streamlet from the currently selected one of the low quality stream, the medium quality stream, and the high quality stream; and

sending the retrieved first streamlet from the currently selected one of the low quality stream, the medium quality stream, and the high quality stream to the respective one of the one of the end user stations over the internet connection.

24. The process of claim **23**, wherein the second streamlet of each of the groups of streamlets each has the same second duration and corresponds to the same second portion of the video in the low quality stream, the medium quality stream, and the high quality stream, the second streamlet of the low quality stream having the same bitrate as the first streamlet of the low quality stream.

25. The process of claim **23**, wherein the first and second durations are different.

26. The process of claim **23**, wherein the video is a live event video.

27. The process of claim **23**, wherein the video includes archived content.

28. A process executable by a content player device to stream a video over a network from a server for playback of the video by the content player device, the process comprising:

establishing an internet connection between the content player device and the server,

wherein the server accesses a plurality of streams including a low quality stream, a medium quality stream, and a high quality stream, wherein the low quality stream, the medium quality stream, and the high quality stream each comprise a group of streamlets encoded at a respective one of a plurality of different bitrates, each group comprising at least first and second streamlets, each of the streamlets corresponding to a portion of the video; wherein at least one of the low quality stream, the medium quality stream, and the high quality stream is encoded at a bitrate of no less than 600 kbps; and

wherein the first streamlet of each of the groups of streamlets has the same first duration and encodes the same first portion of the video in the low quality stream, the medium quality stream, and the high quality stream, the first streamlet of the low quality stream having a different bitrate than the first streamlet of the high quality stream and the first streamlet of the medium quality stream;

selecting, by the content player device, a currently selected one of the low quality stream, the medium quality stream, and the high quality stream based upon a determination by the content player device to select a higher or lower bitrate version of the video;

placing a streamlet request over one or more internet connections from the content player device to retrieve the first streamlet storing the first portion of the video; and

receiving the requested streamlet from the server via the internet connection; and rendering, by the content player device, the received streamlet for playback of the video.

29. The process of claim **28**, wherein the video includes archived content.

30. The process of claim **28**, wherein the video is a live event video.

* * * * *