PUBLIC VERSION

UNITED STATES INTERNATIONAL TRADE COMMISSION
Washington, D.C.

In the Matter of **CERTAIN FITNESS DEVICES, STREAMING COMPONENTS THEREOF, AND SYSTEMS CONTAINING SAME**	**Investigation No. 337-TA-1265**

COMMISSION OPINION

I. INTRODUCTION 1
II. BACKGROUND 2
A. Overview of the Procedural History 2
B. Overview of the Technology 8
C. The Asserted Patents 10
1. U.S. Patent No. 9,407,564 11
2. U.S. Patent No. 10,757,156 12
3. U.S. Patent No. 10,469,554 12
4. U.S. Patent No. 10,469,555 12
D. The Accused Products 13
E. The Domestic Industry Products 14
III. COMMISSION REVIEW OF THE FINAL INITIAL DETERMINATION 16
IV. THE ISSUES UNDER REVIEW 16
A. Whether DISH Satisfied the Technical Prong of the Domestic Industry Requirement 16
1. The Applicable Law 16
2. Waiver 18
3. Claim Construction 25
4. Technical Prong 56
B. Priority and Anticipation Over a Prior Public Use 57
1. The Applicable Law 59
2. The Commission's Determination 61

DISH TECHNOLOGIES L.L.C. EXHIBIT 2007, Page 1
Aylo Freesites Ltd. v. Dish Technologies L.L.C.
IPR2024-00516

C. Whether the Asserted Claims of the ’555 Patent Are Invalid for Misjoinder of Mr. Brueck 64

1. The Applicable Law 65

2. The Commission’s Determination 66

V. REMEDY, BONDING, AND THE PUBLIC INTEREST 69

A. Remedy 69

1. Limited Exclusion Order 69

2. Cease and Desist Order 77

B. Public Interest 81

1. The Public Health and Welfare 82

2. Competitive Conditions in the United States Economy 86

3. Production of Like or Directly Competitive Articles in the United States 87

4. United States Consumers 88

C. Bonding 92

VI. CONCLUSION 93

DISH TECHNOLOGIES L.L.C. EXHIBIT 2007, Page 2
Aylo Freesites Ltd. v. Dish Technologies L.L.C.
IPR2024-00516

I. INTRODUCTION

On November 18, 2022, the Commission determined to review in part the final initial determination ("Final ID") issued by the presiding chief administrative law judge ("CALJ") on September 9, 2022. 87 Fed. Reg. 72510, 72510–13 (Nov. 25, 2022). The Final ID had found a violation of section 337 of the Tariff Act of 1930, as amended, 19 U.S.C. § 1337, with respect to the alleged importation into the United States, the sale for importation, or the sale within the United States after importation of certain fitness devices, streaming components thereof, and systems containing same alleged to infringe certain claims of U.S. Patent Nos. 9,407,564 ("the '564 patent"); 10,469,554 ("the '554 patent"); 10,469,555 ("the '555 patent"); and 10,757,156 ("the '156 patent") (collectively, the "Asserted Patents").

On review, the Commission has determined to affirm the Final ID's finding that Complainants' domestic industry products practice one or more claims of the '156, '554, and '555 patents based on modified reasoning, but to reverse the Final ID's finding that Complainants' domestic industry products practice one or more claims of the '564 patent, for the reasons discussed below. The Commission also affirms with modifications the Final ID's findings that the asserted claims of the '554 and '555 patents can claim priority to U.S. App. No. 60/566,831 ("the '831 Provisional Application") and are not invalid over the prior public use of the Move Media Player. The Commission additionally finds that Respondents did not show that the asserted claims of the '555 patent are invalid for misjoinder of inventorship. Accordingly, the Commission finds a violation of section 337 as to the asserted claims of the '156, '554, and '555 patents, but not as to the asserted claims of the '564 patent.

As a remedy, the Commission has determined to issue a limited exclusion order ("LEO") and cease and desist orders ("CDOs") to the remaining Respondents. The Commission has found that the public interest factors do not preclude the issuance of this

DISH TECHNOLOGIES L.L.C. EXHIBIT 2007, Page 3
Aylo Freesites Ltd. v. Dish Technologies L.L.C.
IPR2024-00516

remedy. The Commission has further determined to set a bond in the amount of zero percent (0%) of the entered value of the covered products (*i.e.*, no bond) during the period of Presidential Review.

The Commission has additionally determined to grant a joint motion to terminate the investigation as to certain respondents.

This opinion sets forth the Commission's reasoning in support of these determinations. The Commission affirms and adopts the Final ID's findings, conclusions, and supporting analysis that are not inconsistent with the Commission's opinion.

II. BACKGROUND

A. Overview of the Procedural History

On May 19, 2021, the Commission instituted this investigation based on a complaint filed on behalf of DISH DBS Corporation of Englewood, Colorado; DISH Technologies, L.L.C. of Englewood, Colorado; and Sling TV L.L.C. of Englewood, Colorado (collectively, "DISH").[1] 86 Fed. Reg. 27106, 27106–07 (May 19, 2021). The Complaint alleged a violation of section 337 based upon the importation into the United States, the sale for importation, and the sale within the United States after importation of certain fitness devices, streaming components thereof, and systems containing the same by reason of infringement of certain claims of the '564, '554, '555, and '156 patents and U.S. Patent No. 10,951,680 ("the '680 patent"). *Id.* The notice of investigation named as respondents ICON Health & Fitness, Inc. of

[1] Complaint of DISH DBS Corporation et al. Under Section 337 of the Tariff Act of 1930, as Amended, EDIS Doc. ID 739751 (Apr. 13, 2021) ("Complaint" or "Compl.").

DISH TECHNOLOGIES L.L.C. EXHIBIT 2007, Page 4
Aylo Freesites Ltd. v. Dish Technologies L.L.C.
IPR2024-00516

Logan, Utah ("ICON" or "iFIT Inc.")[2]; FreeMotion Fitness, Inc. of Logan, Utah ("FreeMotion"); NordicTrack Inc. of Logan, Utah ("NordicTrack," and together with ICON and FreeMotion, "iFit"); lululemon athletica inc. of Vancouver, Canada ("lululemon"); Curiouser Products Inc. d/b/a MIRROR of New York, New York ("Curiouser," and together with lululemon, "MIRROR"); and Peloton Interactive, Inc. of New York, New York ("Peloton," and together with the other respondents, "Respondents"). *Id.*; Order No. 14 (Nov. 4, 2021), *unreviewed by* Comm'n Notice (Dec. 6, 2021), 86 Fed. Reg. at 70532. The Commission's Office of Unfair Import Investigations ("OUII") also was named as a party in this investigation. 86 Fed. Reg. at 27106–07.

Prior to the issuance of the Final ID, several claims of the Asserted Patents and all asserted claims of the '680 patent were terminated from the investigation. *See* Order No. 15 (Nov. 19, 2021), *unreviewed by* Comm'n Notice (Dec. 21, 2021); Order No. 21 (Mar. 3, 2022), *unreviewed by* Comm'n Notice (Mar. 23, 2022). A prehearing conference was held on March 9, 2022, and the evidentiary hearing commenced immediately thereafter. DISH, iFIT, Inc., FreeMotion, NordicTrack, lululemon, Curiouser, and Peloton participated in the hearing. The hearing concluded on March 14, 2022. *See* Order No. 20 (Mar. 1, 2022).

On March 29, 2022, DISH filed its opening post-hearing brief,[3] which asserted, against all respondents, claims 1 and 3–5 of the '564 patent, claims 16, 17, and 20 of the '554 patent, claims 10, 11, 14, and 15 of the '555 patent, and claims 1, 4, and 5 of the '156 patent. DISH

---

[2] Prior to the issuance of the Final ID, the notice of investigation was amended such that the name of respondent "ICON Health & Fitness, Inc." was replaced with the name "iFIT Inc." *See* Order No. 14 (Nov. 4, 2021), *unreviewed by* Comm'n Notice (Dec. 6, 2021), 86 Fed. Reg. 70532 (Dec. 10, 2021).

[3] Complainants' Post-Hearing Brief, EDIS Doc. ID 766879 (Mar. 29, 2022) ("CPHBr.").

DISH TECHNOLOGIES L.L.C. EXHIBIT 2007, Page 5
Aylo Freesites Ltd. v. Dish Technologies L.L.C.
IPR2024-00516

also asserted claim 2 of the ’156 patent against Peloton. That same day, Respondents and OUII also filed their opening post-hearing briefs.[4] On April 7, 2022, or April 13, 2022, the parties filed their reply post-hearing briefs.[5]

On June 23, 2022, the investigation was reassigned to the CALJ. *See* Notice to the Parties, EDIS Doc. ID 773712 (June 23, 2022).

On September 9, 2022, the CALJ issued the Final ID, which found that Respondents violated section 337. More particularly, the Final ID found, *inter alia*:

1. The importation requirement of section 337 has been satisfied.
2. Claims 1 and 3–5 of the ’564 patent have been infringed by the importation, sale, and use of all accused products, with the exception of Peloton’s [redacted] and MIRROR’s MPEG-DASH system.
3. Claim 1 of the ’156 patent has been infringed by the importation, sale, and use of all accused products.
4. Claim 2 of the ’156 patent has been infringed by the importation, sale, and use of all Peloton accused products.
5. Claim 4 of the ’156 patent has been infringed by the importation, sale, and use of all accused products, with the exception of Peloton’s [redacted] and MIRROR’s MPEG-DASH system.
6. Claim 5 of the ’156 patent has not been infringed by the importation, sale, and use of all accused products.
7. Claims 16, 17, and 20 of the ’554 patent have been infringed by the importation, sale, and use of all accused products, with the exception of Peloton’s [redacted] and MIRROR’s MPEG-DASH system.

---

[4] Respondents’ Post-Hearing Brief, EDIS Doc. ID 766872 (Mar. 29, 2022) (“RPHBr.”); The Commission Investigative Staff’s Post-Hearing Brief, EDIS Doc. ID 767210 (Mar. 29, 2022) (“OPHBr.”).

[5] Complainants’ Post-Hearing Reply Brief, EDIS Doc. ID 767641 (Apr. 7, 2022) (“CPHBr. (Reply)”); Respondents’ Reply Post-Hearing Brief, EDIS Doc. ID 767625 (Apr. 7, 2022) (“RPHBr. (Reply)”); Commission Investigative Staff’s Post-Hearing Reply Brief, EDIS Doc. ID 768166 (Apr. 13, 2022) (“OPHBr. (Reply)”).

DISH TECHNOLOGIES L.L.C. EXHIBIT 2007, Page 6
Aylo Freesites Ltd. v. Dish Technologies L.L.C.
IPR2024-00516

8. Claims 10 and 11 of the ’555 patent have been infringed by the importation, sale, and use of all accused products.

9. Claims 14 and 15 of the ’555 patent have been infringed by the importation, sale, and use of all accused products, with the exception of Peloton’s [redacted] and MIRROR’s MPEG-DASH system.

10. The domestic industry requirement has been satisfied with respect to the Asserted Patents.

11. The asserted claims have not been shown invalid in view of the prior art.

12. The asserted claims have not been shown to be unenforceable.

13. No asserted claim has been shown invalid as failing to satisfy the requirements of 35 U.S.C. § 112.

14. No asserted claim has been shown to be directed to ineligible subject matter under 35 U.S.C. § 101.

15. A violation of section 337 has been shown by the importation and sale of articles that infringe claims 1 and 3–5 of the ’564 patent, claims 1, 2, and 4 of the ’156 patent, claims 16, 17, and 20 of the ’554 patent, and claims 10, 11, 14, and 15 of the ’555 patent.

Final ID at 254–56.

On September 23, 2022, Respondents and OUII filed petitions for review of the Final ID.[6] On October 3, 2022, DISH and OUII filed responses to the petitions.[7] On October 11,

---

[6] Respondents’ Petition for Review of the Initial Determination, EDIS Doc. ID 780944 (Sept. 23, 2022) (“RPet.”); The Office of Unfair Import Investigations’ Petition for Review-in-Part of the Final Initial Determination, EDIS Doc. ID 780956 (Sept. 23, 2022) (“OPet.”).

[7] Complainants’ Combined Response to Respondents’ and the Office of Unfair Import Investigations’ Petitions for Review of the Initial Determination, EDIS Doc. ID 781544 (Oct. 3, 2022) (“CResp.”); The Office of Unfair Import Investigations’ Response to Respondents’ Petition for Review in Part of the Final Initial Determination, EDIS Doc. ID 781497 (Oct. 3, 2022) (“OResp.”).

DISH TECHNOLOGIES L.L.C. EXHIBIT 2007, Page 7
Aylo Freesites Ltd. v. Dish Technologies L.L.C.
IPR2024-00516

2022, the private parties filed their public interest statements.[8] The Commission did not receive any comments on the public interest from non-parties or from OUII.

On November 18, 2022, after considering the parties' petitions and the responses thereto, the Commission determined to review the Final ID in part. 87 Fed. Reg. at 72510–13. In particular, the Commission reviewed the following:

> (1) whether DISH satisfied the technical prong of the domestic industry requirement as to all Asserted Patents;
>
> (2) whether claims 16, 17, and 20 of the '554 patent and claims 14 and 15 of the '555 patent are entitled to claim priority to U.S. App. No. 60/566,831;
>
> (3) whether claims 16, 17, and 20 of the '554 patent and claims 14 and 15 of the '555 patent are invalid as anticipated over the prior public use of the Move Media Player;
>
> (4) whether the asserted claims of the '555 patent are invalid for misjoinder of Mr. Brueck; and
>
> (5) whether the preamble of claim 10 of the '555 patent is limiting.

Id. The Commission requested briefing on certain issues under review and on remedy, the public interest, and bonding. *See id.*

---

[8] Complainants' Public Interest Statement, EDIS Doc. ID 782024 (Oct. 11, 2022) ("DStmt."); Respondent Peloton Interactive, Inc.'s Public Interest Statement, EDIS Doc. ID 782020 (Oct. 12, 2022) ("PStmt."); Public Interest Statement by Respondents iFIT Inc., f/k/a ICON Health & Fitness, Inc., FreeMotion Fitness, Inc., and NordicTrack, Inc., EDIS Doc. ID 782048 (Oct. 11, 2022) ("iStmt."); Respondents lululemon athletica inc. and Curiouser Products Inc. (d/b/a MIRROR) Rule 210.50(a)(4) Submission of Information Relating to the Public Interest, EDIS Doc. ID 782029 (Oct. 11, 2022) ("MStmt.").

DISH TECHNOLOGIES L.L.C. EXHIBIT 2007, Page 8
Aylo Freesites Ltd. v. Dish Technologies L.L.C.
IPR2024-00516

On December 2, 2022, the parties filed their written submissions on the issues under review and on remedy, public interest, and bonding,[9] and on December 9, 2022, the parties filed their reply submissions.[10]

On February 13, 2023, MIRROR and DISH filed a joint, unopposed motion to partially terminate the investigation as to MIRROR based on a settlement agreement between DISH and MIRROR.[11] The MIRROR Motion asserts that "[t]here is a settlement agreement between DISH and MIRROR concerning the subject matter of this Investigation." MIRROR Mtn. at 1. The motion further declares that there are "no other agreements, written or oral, express or implied between the parties concerning the subject matter of the Investigation." *Id.* The motion additionally asserts that good cause exists to terminate the investigation as to MIRROR in view of the settlement agreement and that termination of the investigation would not adversely affect the public interest. *See id.* at 1–2 (citing, in part, *Certain Active-Matrix OLED Display Devices*

---

[9] Complainants' Opening Submission on the Issues under Review and on Remedy, the Public Interest, and Bonding, EDIS Doc ID 785576 (Dec. 2, 2022) ("CBr."); Respondents' Response to the Commission's November 18, 2022 Request for Written Submissions on the Issues under Review and on Remedy, the Public Interest, and Bonding, EDIS Doc ID 785569 (Dec. 2, 2022) ("RBr."); Response of the Office of Unfair Import Investigations to the Commission's Request for Written Submissions on the Issues under Review and on Remedy, Bonding, and the Public Interest, EDIS Doc ID 785555 (Dec. 2, 2022) ("OUIIBr.").

[10] Complainants' Reply Submission to the Commission's Questions on the Issues under Review and on Remedy, the Public Interest, and Bonding, EDIS Doc ID 786089 (Dec. 12. 2022) ("CBr. (Reply)"); Respondents' Reply to the Commission's November 18, 2022 Request for Written Submissions on the Issues under Review and on Remedy, the Public Interest, and Bonding, EDIS Doc ID 786060 (Dec. 12. 2022) ("RBr. (Reply)"); Reply of the Office of Unfair Import Investigations to the Responses to the Commission's Request for Written Submissions on the Issues under Review and on Remedy, Bonding, and the Public Interest, EDIS Doc ID 786054 (Dec. 12. 2022) ("OUIIBr. (Reply)").

[11] Joint Motion of DISH and Mirror to Partially Terminate the Investigation as to MIRROR Based on Settlement Agreement, EDIS Doc. ID 790133 (Feb. 13, 2023) ("MIRROR Motion" or "MIRROR Mtn.").

DISH TECHNOLOGIES L.L.C. EXHIBIT 2007, Page 9
Aylo Freesites Ltd. v. Dish Technologies L.L.C.
IPR2024-00516

& Components Thereof, Inv. No. 337-TA-1243, Comm'n Notice (Oct. 28, 2021) (EDIS Doc ID 755387); *Certain Digital Cameras, Software, & Components Thereof*, Inv. No. 337-TA-1059, Comm'n Notice at 3 (Mar. 8, 2019) (EDIS Doc ID 669518) ("[T]he public interest favors settlement to avoid needless litigation and to conserve public and private resources.")) (other citations omitted).

On February 23, 2023, OUII filed a response supporting the motion.[12]

The Commission has determined to grant the MIRROR Motion. The motion complies with the Commission's Rules, is not adverse to the public interest, and there are no extraordinary circumstances that would warrant denying the motion. *See* 19 C.F.R. § 210.21(b).[13, 14] Accordingly, respondents lululemon athletica inc. and Curiouser Products Inc. d/b/a MIRROR are terminated from the investigation based on settlement.

B. Overview of the Technology

The technology at issue generally relates to streaming video and audio content over the Internet. The parties stipulated to the following general description of the technology at issue (delivery of video over networks such as the Internet using adaptive bitrate streaming):

> Streaming refers to technology that delivers audio/video content from a server to a client at a bitrate that allows the user to view the content contemporaneous with its receipt. The higher the bitrate of the video, the

---

[12] Response of the Office of Unfair Import Investigations to the Joint Motion of DISH and Mirror to Partially Terminate the Investigation as to MIRROR Based on Settlement Agreement, EDIS Doc. ID 790996 (Feb. 23, 2023).

[13] Commission Rule 210.21(b)(2), 19 C.F.R. § 210.21(b)(2), provides that a motion for termination by settlement together with the public and confidential versions of the settlement agreement must be certified by the ALJ to the Commission with an initial determination if the motion is granted. The Commission hereby waives this requirement of Commission Rule 210.21(b).

[14] Accordingly, the respondents remaining in this investigation are iFIT, Inc., FreeMotion, NordicTrack, and Peloton (the "Remaining Respondents").

DISH TECHNOLOGIES L.L.C. EXHIBIT 2007, Page 10
Aylo Freesites Ltd. v. Dish Technologies L.L.C.
IPR2024-00516

> more data (in bits) it takes to represent and stream that video. The delivery of the content may be limited by the speed of the end-user's network connection. The network speed can change during the course of content delivery resulting in buffering and stalling. Adaptive bitrate streaming systems may shift the bitrate of the audio/video content based on the network speed in an attempt to avoid stalling.

Joint Tech. Stip. at 2 (Oct. 15, 2021), EDIS Doc. ID 754337.

The Asserted Patents relate to adaptive bitrate streaming. *See, e.g.*, JX-0001 ('564 patent) at 1:31–41. The adaptive bitrate streaming technology includes encoding the content file into at least three different quality streams, as shown in Figure 2b of the '564 patent, reproduced below:

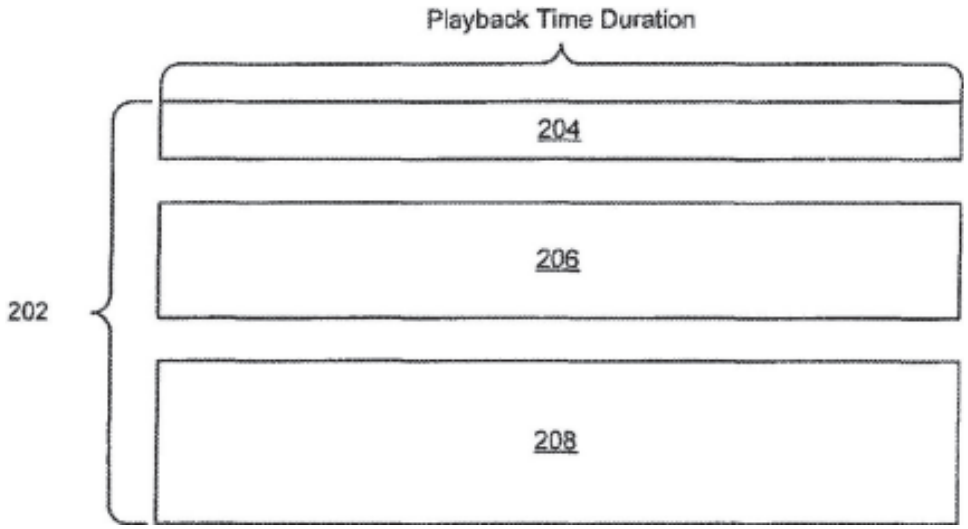

Id. at Fig. 2b. As shown in Figure 2b, the plurality of streams 202 have varying degrees of quality and bandwidth, and include a low-quality stream 204, a medium-quality stream 206, and a high-quality stream 208, as represented by the relative thicknesses of the demonstrative rectangles. *See id.* at 6:46–50. Each of the streams 204, 206, and 208 is a copy of the content file encoded and compressed to varying bit rates. *See id*. at 6:51–52.

Each of the streams 204, 206, and 208 (referred to generally as stream 210 in the figure below) is then further subdivided into discrete portions called "streamlets" 212, as shown in Figure 2c of the '564 patent, reproduced below:

DISH TECHNOLOGIES L.L.C. EXHIBIT 2007, Page 11
Aylo Freesites Ltd. v. Dish Technologies L.L.C.
IPR2024-00516

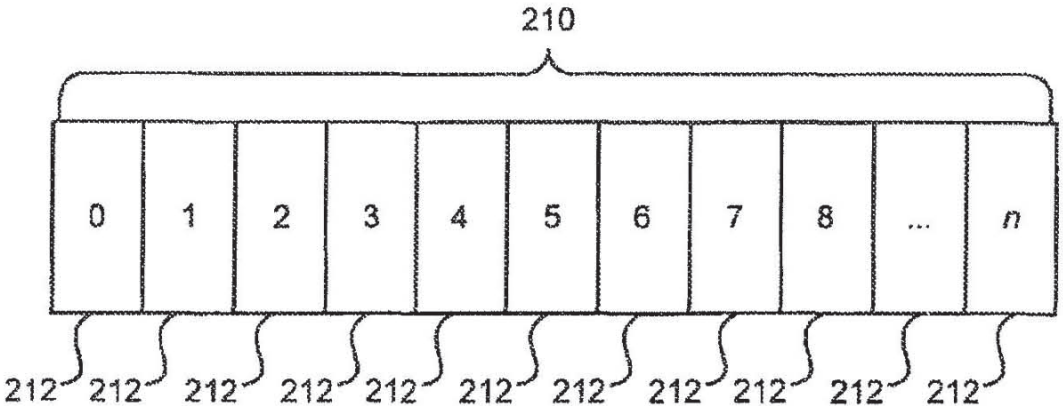

Id. at Fig. 2c; *see id*. at 6:58–60. Each streamlet 212 comprises a portion of the content contained in stream 210. *See id*. at 6:61–62. Streamlets are aligned by starting time and duration across the different quality streams such that a particular streamlet in, *e.g*., a low-quality stream and a medium-quality stream, corresponds to the same portion of the content file. *See* JX-0001 (’564 patent) at 6:62–7:7. This allows end user equipment to switch between different quality streamlets in response to changing network conditions.

C. The Asserted Patents

DISH now asserts four patents in this investigation: the ’564, ’156, ’554, and ’555 patents. The Asserted Patents all claim priority to the ’831 Provisional Application, which was filed on April 30, 2004. *See* JX-0001 (’564 patent) at cover page; JX-0004 (’156 patent) at cover page; JX-0002 (’554 patent) at cover page; JX-0003 (’555 patent) at cover page; JX-0029 (’831 Provisional Application) at 2. The following demonstrative illustrates the family of patents and applications that includes the Asserted Patents:

DISH TECHNOLOGIES L.L.C. EXHIBIT 2007, Page 12
Aylo Freesites Ltd. v. Dish Technologies L.L.C.
IPR2024-00516

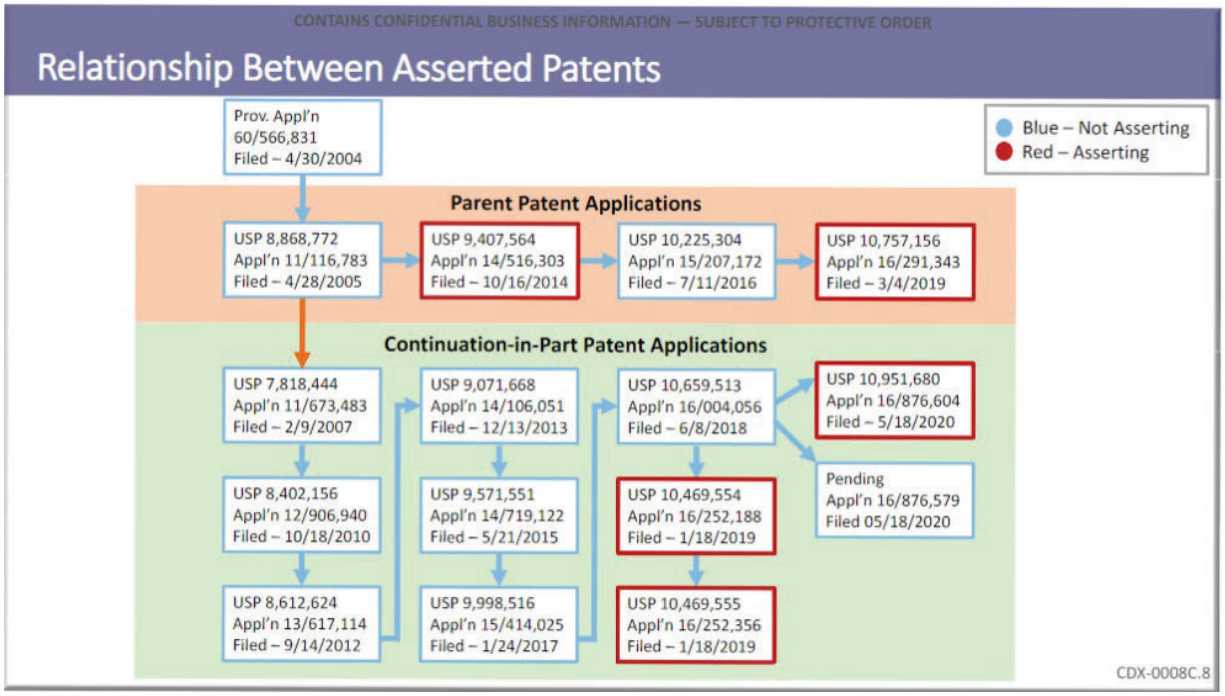

CDX-0008C at 8.[15] The '564 and '156 patents issued from continuation applications claiming priority to the parent application for all Asserted Patents, U.S. Application No. 11/116,783 ("the '783 Application"). The specifications of the '564 and '156 patents are similar. The '554 and '555 patents issued from a continuation-in-part ("CIP") application, U.S. Application No. 11/673,483 ("the '483 CIP Application"). The specifications of the '554 and '555 patents are likewise similar and may be referred to herein as the "CIP Specification."

1. U.S. Patent No. 9,407,564

The '564 patent, titled "Apparatus, System, and Method for Adaptive-Rate Shifting of Streaming Content," issued on August 2, 2016, and names Robert Drew Major and Mark B. Hurst as inventors. JX-0001 ('564 patent) at cover page. The '564 patent issued from application no. 14/516,303, filed on October 16, 2014. *Id*. DISH asserts independent claim 1

[15] As noted above, DISH is no longer asserting the '680 patent.

and dependent claims 3–5. *See* CPHBr.[16] at 2. DISH relies on claims 1, 3, and 5 of the ’564 patent to satisfy the technical prong of the domestic industry requirement. *See id.*

2. U.S. Patent No. 10,757,156

The ’156 patent, titled “Apparatus, System, and Method for Adaptive-Rate Shifting of Streaming Content,” issued on August 25, 2020, and also names Robert Drew Major and Mark B. Hurst as inventors. JX-0004 (’156 patent) at cover page. The ’156 patent issued from application no. 16/291,343, filed on March 4, 2019. *Id*. DISH asserts independent claim 1 and dependent claims 2 (Peloton only), 4, and 5. *See* CPHBr. at 2. DISH relies on claims 1 and 4 of the ’156 patent to satisfy the technical prong of the domestic industry requirement. *See id.* at 2, 156.

3. U.S. Patent No. 10,469,554

The ’554 patent, titled “Apparatus, System, and Method for Multi-Bitrate Content Streaming,” issued on November 5, 2019, and, like the ’156 and ’564 patents, names R. Drew Major and Mark B. Hurst as inventors, but also adds inventor David F. Brueck. JX-0002 (’554 patent) at cover page. The ’554 patent issued from application no. 16/252,188, filed on January 18, 2019. *Id*. DISH asserts independent claim 16 and dependent claims 17 and 20. *See* CPHBr. at 2. DISH relies on claims 16 and 17 of the ’554 patent to satisfy the technical prong of the domestic industry requirement. *See id.* at 139.

4. U.S. Patent No. 10,469,555

The ’555 patent, titled “Apparatus, System, and Method for Multi-Bitrate Content Streaming,” issued on November 5, 2019, and, like the ’554 patent, names Mark B. Hurst, R.

---

[16] Complainants’ Post-Hearing Brief, EDIS Doc. ID 766879 (Mar. 29, 2022) (“CPHBr.”).

DISH TECHNOLOGIES L.L.C. EXHIBIT 2007, Page 14
Aylo Freesites Ltd. v. Dish Technologies L.L.C.
IPR2024-00516

Drew Major, and David F. Brueck as inventors.[17] JX-0003 ('555 patent) at cover page. The '555 patent issued from application no. 16/252,356, filed on January 18, 2019. *Id*. DISH asserts independent claim 10 and dependent claims 11, 14, and 15. *See* CPHBr. at 2. DISH relies on claims 10, 11, and 14 of the '555 patent to satisfy the technical prong of the domestic industry requirement. *See* CPHBr. at 151.

D. The Accused Products

The accused products are "Internet-streaming enabled video displays and components thereof that are capable of using adaptive bit-rate streaming to stream content for fitness devices, and fitness devices containing such internet-streaming video displays and components." Compl. at ¶ 4.1. DISH accuses the following products for each of the Remaining Respondents:

Respondent	Representative Product	Accused Product(s)
Peloton	Peloton Bike running Peloton application software available on April 13, 2021, as it operates when receiving on demand and live content in the format created, used, or provided by Peloton as of April 13, 2021	Peloton Bike; Peloton Bike+; Peloton Tread; Peloton Tread+; Touchscreen (Topaz) US/CA; Touchscreen (Quartz) Gen 1; Touchscreen Qbert – U.S. & CAN; and Touchscreen (Sapphire) products
iFit	NordicTrack Commercial S15i running iFit application software available on April 13, 2021	ProForm Vue, NordicTrack Vault (complete), NordicTrack Vault (standalone), ProForm Studio Bike Pro, ProForm Studio Bike Pro 22, FreeMotion r22.9, FreeMotion u22.9, FreeMotion Coachbike, NordicTrack Commercial S15i, NordicTrack Commercial S22i, NordicTrack Commercial VR25, NordicTrack Commercial R35, NordicTrack Commercial VU 19, NordicTrack Commercial

[17] Whether Mr. Brueck is properly named as an inventor on the '555 patent is a disputed issue discussed in this Commission opinion.

DISH TECHNOLOGIES L.L.C. EXHIBIT 2007, Page 15
Aylo Freesites Ltd. v. Dish Technologies L.L.C.
IPR2024-00516

		VU 29, ProForm R10, NordicTrack RW600, NordicTrack RW700, NordicTrack RW900, ProForm Carbon T7, ProForm Carbon T10, ProForm Pro 2000, ProForm Pro 9000, ProForm Carbon E7, ProForm Pro E14, ProForm Carbon HIIT H7, ProForm Carbon HIIT H14, FreeMotion i22.9, FreeMotion t22.9, FreeMotion e22.9 Elliptical, NordicTrack X22i, NordicTrack X32i, NordicTrack Commercial 1750, NordicTrack Commercial 2450, NordicTrack Commercial 2950, NordicTrack EXP 7i, NordicTrack EXP 10i, NordicTrack T 6.5 Si, NordicTrack FS10i, NordicTrack FS14i, NordicTrack Commercial 9.9, NordicTrack Commercial 14.9, and NordicTrack SpaceSaver SE9iproducts running iFit application software available on April 13, 2021
iFit	NordicTrack Fusion CST Pro, if running iFit application software that was available on April 13, 2021	NordicTrack Fusion CST and NordicTrack Fusion CST Pro products running iFit application software available on April 13, 2021

See Joint Stipulation of DISH and Peloton as to Representative Products, EDIS Doc. ID 755504, at 1–2 (Oct. 29, 2021); Joint Stipulation of DISH and iFIT as to Representative Products, EDIS Doc. ID 755539, at 1–2 (Oct. 29, 2021); OPHBr. at 16–21.

E. The Domestic Industry Products

The domestic industry products include DISH's set-top boxes, including the Hopper, Hopper with Sling, Hopper 3, Hopper Duo, and Wally products (collectively, the "DISH Set-Top Boxes"). *See* CPHBr. at 117. DISH further contends that the Sling TV Applications ("Sling Apps") for the Amazon Fire (the "Sling Fire App"), the Sling App for iOS, and the Sling App for Roku practice the asserted domestic industry claims. *See id.* at 120–21.

DISH TECHNOLOGIES L.L.C. EXHIBIT 2007, Page 16
Aylo Freesites Ltd. v. Dish Technologies L.L.C.
IPR2024-00516

The DISH Set-Top Boxes provide both satellite-TV and Internet-streaming functionality to the user's television or other display, as shown in the figure below. *See* CX-0002C (Kroonenberg[18] DWS) at Q/A 53–54.

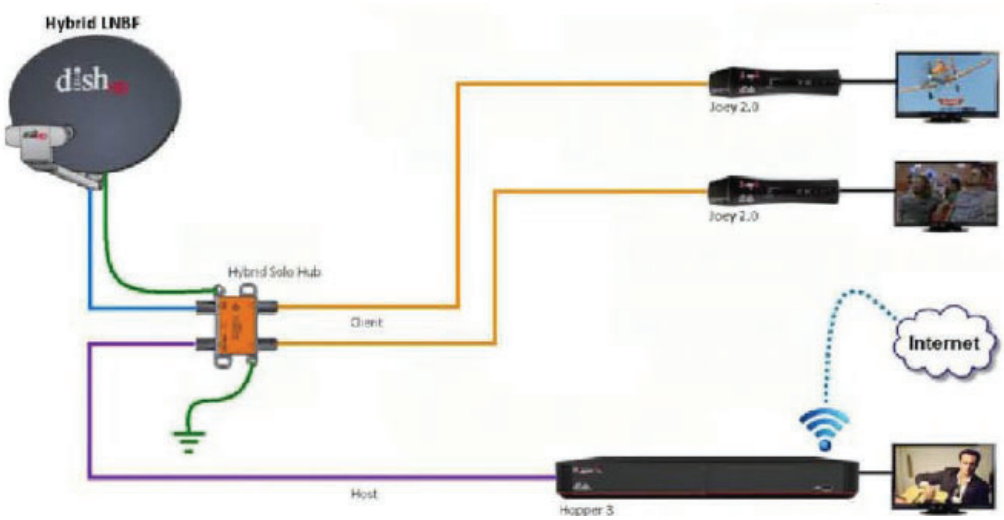

CX-0062 (Hopper Installation Guide) at 1. It is undisputed that DISH's Set-Top Boxes do not themselves have screens or displays. *E.g.*, RBr. at 10; OPet. at 2. The Final ID found that the Hopper 3 set-top box is representative of the DISH Set-Top Boxes produced after December 2017. *See* Final ID at 78.

The Sling Apps "deliver[ ] television programming and other content under the Sling TV brand, but solely via the Internet." CX-0002C (Kroonenberg DWS) at Q/A 19. DISH provides the Sling Apps for a variety of different platforms, including the Amazon Fire, Apple TV, Roku, Samsung Smart TV, LG Smart TV, and Xbox game console. *Id.* DISH proceeded only with evidence regarding the Sling Fire App, but the Final ID found that DISH did not establish that any one Sling App is representative of any other. *See* Final ID at 79.

---

[18] Stuart Kroonberg is a DISH employee.

DISH TECHNOLOGIES L.L.C. EXHIBIT 2007, Page 17
Aylo Freesites Ltd. v. Dish Technologies L.L.C.
IPR2024-00516

III. COMMISSION REVIEW OF THE FINAL INITIAL DETERMINATION

When the Commission reviews an initial determination, in whole or in part, it reviews the determination *de novo*. *Certain Soft-Edged Trampolines & Components Thereof*, Inv. No. 337-TA-908, Comm'n Op. at 4 (May 1, 2015). Upon review, the "Commission has 'all the powers which it would have in making the initial determination,' except where the issues are limited on notice or by rule." *Certain Flash Memory Circuits & Prods. Containing Same*, Inv. No. 337-TA-382, USITC Pub. No. 3046, Comm'n Op. at 9–10 (July 1997) (quoting *Certain Acid-Washed Denim Garments & Accessories*, Inv. No. 337-TA-324, Comm'n Op. at 5 (Nov. 1992)). With respect to the issues under review, "the Commission may affirm, reverse, modify, set aside or remand for further proceedings, in whole or in part, the initial determination of the administrative law judge." 19 C.F.R. § 210.45(c). The Commission also "may take no position on specific issues or portions of the initial determination," and "may make any finding or conclusions that in its judgment are proper based on the record in the proceeding." *Id.*; *see also Beloit Corp. v. Valmet Oy*, 742 F.2d 1421, 1423 (Fed. Cir. 1984).

IV. THE ISSUES UNDER REVIEW

A. Whether DISH Satisfied the Technical Prong of the Domestic Industry Requirement

1. The Applicable Law

For a patent-based complaint, a violation of section 337 can be found "only if an industry in the United States, relating to the articles protected by the patent . . . concerned, exists or is in the process of being established." 19 U.S.C. § 1337(a)(2). The complainant bears the burden of establishing that the domestic industry requirement is satisfied. *See Certain Set-Top Boxes & Components Thereof*, Inv. No. 337-TA-454, ID at 294 (June 21, 2002) (unreviewed in relevant part).

DISH TECHNOLOGIES L.L.C. EXHIBIT 2007, Page 18
Aylo Freesites Ltd. v. Dish Technologies L.L.C.
IPR2024-00516

This domestic industry requirement of section 337 is often described as having an economic prong and a technical prong. *InterDigital Commc'ns, LLC v. Int'l Trade Comm'n*, 707 F.3d 1295, 1298 (Fed. Cir. 2013); *Certain Stringed Musical Instruments & Components Thereof*, Inv. No. 337-TA-586, USITC Pub. 4120, Comm'n Op. at 12–14 (Dec. 2009). The technical prong of the domestic industry requirement is satisfied when the complainant in a patent-based section 337 investigation establishes that it is practicing or exploiting the patents at issue. *See* 19 U.S.C. §§ 1337(a)(2), (3); *Certain Microsphere Adhesives, Process for Making Same & Prods. Containing Same, Including Self-Stick Repositionable Notes*, Inv. No. 337-TA-366, Comm'n Op. at 8 (Jan. 16, 1996). "The test for satisfying the 'technical prong' of the industry requirement is essentially [the] same as that for infringement, *i.e.*, a comparison of domestic products to the asserted claims." *Alloc, Inc. v. Int'l Trade Comm'n*, 342 F.3d 1361, 1375 (Fed. Cir. 2003). To prevail, the patentee must establish by a preponderance of the evidence that the domestic product practices one or more claims of the patent. It is sufficient to show that the products practice any claim of that patent, not necessarily a claim of that patent asserted for infringement purposes. *See Certain Male Prophylactic Devices*, Inv. No. 337-TA-546, Comm'n Op. at 38 (Aug. 1, 2007).

A determination of infringement, and thus, domestic industry, requires a two-step analysis. *Ethicon Endo-Surgery, Inc. v. U.S. Surgical Corp.*, 149 F.3d 1309, 1315 (Fed. Cir. 1998). "First, the claim must be properly construed to determine its scope and meaning. Second, the claim as properly construed must be compared to the accused device or process." *Id.* Under the first step, "when the parties present a fundamental dispute regarding the scope of a claim term, it is the court's duty to resolve it." *O2 Micro Int'l Ltd. v. Beyond Innovation Tech. Co.*, 521 F.3d 1351, 1362 (Fed. Cir. 2008).

DISH TECHNOLOGIES L.L.C. EXHIBIT 2007, Page 19
Aylo Freesites Ltd. v. Dish Technologies L.L.C.
IPR2024-00516

"[A] claim construction analysis must begin and remain centered on the claim language itself, for that is the language the patentee has chosen to particularly point[ ] out and distinctly claim[ ] the subject matter which the patentee regards as his invention." *Innova/Pure Water, Inc. v. Safari Water Filtration Sys., Inc.*, 381 F.3d 1111, 1116 (Fed. Cir. 2004) (internal quotation marks and citation omitted). Claims should be given their ordinary and customary meaning as understood by a person of ordinary skill in the art, viewing the claim terms in the context of the entire patent. *Phillips v. AWH Corp*., 415 F.3d 1303, 1312–13 (Fed. Cir. 2005), *cert. denied*, 546 U.S. 1170 (2006).

The specification usually is the best guide to the meaning of the term. *Phillips*, 415 F.3d at 1315. As a general rule, the particular examples or embodiments discussed in the specification are not to be read into the claims as limitations. *Markman v. Westview Instruments, Inc.,* 52 F.3d 967, 979 (Fed. Cir. 1995) (en banc), *aff'd*, 517 U.S. 370 (1996). The specification is, however, always highly relevant to the claim construction analysis, and is usually dispositive. *Phillips*, 415 F.3d at 1315 (quoting *Vitronics Corp. v. Conceptronic, Inc.*, 90 F.3d 1576, 1582 (Fed. Cir. 1996)). Moreover, "[t]he construction that stays true to the claim language and most naturally aligns with the patent's description of the invention will be, in the end, the correct construction." *Id.* at 1316.

2. Waiver

In its pre-hearing brief to the ALJ, DISH argued that its domestic industry products, the DISH Set-Top Boxes and the Sling Apps[19] alone, practice the claims of the Asserted Patents

---

[19] While, as noted above, the Final ID only adjudicated the Sling Fire App (*see* Final ID at 79), DISH's briefing before the ALJ and, after reassignment, the CALJ addressed the Sling Apps generally.

DISH TECHNOLOGIES L.L.C. EXHIBIT 2007, Page 20
Aylo Freesites Ltd. v. Dish Technologies L.L.C.
IPR2024-00516

and thus satisfy the technical prong of the domestic industry requirement alone.[20] *See, e.g.*, CPreHBr. at 127–28. This theory is referred to herein as the "direct practice theory." However, in its post-hearing briefing, DISH also presented a second theory, that the combination of either the DISH Set-Top Box or a Sling App with a display provided by a DISH customer practices the claims of the Asserted Patents. *See, e.g.*, CPHBr. at 11–25, 160–67. This latter theory is referred to herein as the "indirect practice theory." The Final ID found the technical prong of the domestic industry requirement to be satisfied based on the indirect practice theory. *See* Final ID at 108–12. The Final ID did not make a finding as to the direct practice theory, and as a result, did not resolve an underlying claim construction dispute relevant to that theory. *See id.* at 109 n.18.

Respondents and OUII both petitioned the Commission to review the Final ID's technical prong findings, arguing that the Final ID relied on a theory outside the scope of the investigation. *See, e.g.*, RPet. at 5–24; OPet. at 7–17. Respondents argue that, despite DISH being on notice of Respondents' argument that DISH's domestic industry products do not practice the claims because they lack a display, DISH's pre-hearing brief relied on the domestic industry products alone. RBr. at 9–10.

The Commission finds that DISH waived its indirect practice theory under the ALJ's Ground Rules. Ground Rule 7c declared that the parties' pre-hearing briefs and statements shall include:

> [A] statement of the issues to be considered at the hearing that sets forth *with particularity* a party's contentions on each of the proposed issues, including citations to supporting facts and legal authorities, *e.g.*, proposed exhibits. Incorporation by reference is not allowed. *Any contentions not*

---

[20] Pre-Hearing Brief of Complainant DISH, EDIS Doc. ID 763108 (Feb. 11, 2022) ("CPreHBr.").

DISH TECHNOLOGIES L.L.C. EXHIBIT 2007, Page 21
Aylo Freesites Ltd. v. Dish Technologies L.L.C.
IPR2024-00516

> *set forth in detail as required therein shall be deemed abandoned or withdrawn, except for contentions of which a party is not aware and could not be aware in the exercise of reasonable diligence at the time of filing the prehearing statement*.

Order No. 12 (Amended Ground Rules) at 11–12 (emphases added).

The Commission finds that DISH was on notice before it filed its pre-hearing brief that Respondents were alleging that DISH failed to satisfy the domestic industry requirement because its domestic industry products lack a display. Specifically, on September 22, 2021, Respondents provided their initial non-burden contentions, arguing that DISH's domestic industry products do not practice the relevant claims because they lack displays. *See* Respondents' Opposition to DISH's Motion to Strike, EDIS Doc. ID 764439, at 4 (Mar. 3, 2022) (citing Exh. 2, Appx. A, pp. 7 and 12, and Exh. 3, at Appx. A, pp. 14, 28, and 29) ("ROpp'n to Mtn. to Strike"). That response declared:

> Claim 1 requires a "presenting the video by playing back the requested media files." DISH has alleged that its Sling TV Application permits "an end-user station" to perform certain functions. However, the Sling TV Application and DISH Anywhere Applications are software that can be installed on various devices, but does not have a display screen to show video. Similarly, . . . DISH's Set Top Boxes do not contain a display screen and cannot display content.

Id. at Exh. 2, Appx. A, p. 7.

On February 11, 2022, and February 18, 2022, the parties filed their pre-hearing briefs.[21] Despite being on notice of Respondents' argument, DISH's pre-hearing brief did not rely on customers' displays or otherwise disclose its indirect practice theory. *See, e.g.*, CPreHBr. at

[21] Respondents' Pre-Hearing Brief, EDIS Doc. ID 763104 (Feb. 11, 2022) ("RPreHBr."); Commission Investigative Staff's Pre-Hearing Brief, EDIS Doc. ID 763575 (Feb. 18, 2022) ("OPreHBr.").

DISH TECHNOLOGIES L.L.C. EXHIBIT 2007, Page 22
Aylo Freesites Ltd. v. Dish Technologies L.L.C.
IPR2024-00516

127–28. Regarding the disputed limitation in claim 1 of the ’564 patent, DISH’s pre-hearing brief simply stated:

> When the Hopper 3 STB selects the Variant Stream corresponding to the highest resolution “profile_3_05_5_nagra”, the media player subsequently requests and plays back sequential Media Segment files from this Variant Stream prior to application of bandwidth throttling. The GStreamer media player within DISH STBs, such as the Hopper 3 STB, operates to “present[ ] the video by playing back the requested media files with the media player on the end user station in order of ascending playback time.” This was confirmed by the source code.
>
> When the Sling Fire App selects the Representation corresponding to the highest resolution “vid06”, the media player subsequently requests and plays back in order of ascending playback time sequential Media Segment files from this Representation prior to application of bandwidth throttling and then similarly subsequent to application of bandwidth throttling. Source code shows that ExoPlayer in the Sling Fire App operates to “present[ ] the video by playing back the requested media files with the media player on the end user station in order of ascending playback time.”

CPreHBr. at 127–28 (citations omitted). For the technical prong of the domestic industry requirement for the three other Asserted Patents, DISH merely referenced this discussion.

The Commission finds that DISH did not present an indirect practice theory in a timely manner. Indeed, DISH has never disputed that it did not include an indirect practice in its pre-hearing brief. *See generally* CResp.; CBr.; CBr. (Reply). While DISH’s prehearing brief quotes the claim language that refers to playing back the media files with the media player on the end user station, the Commission finds that this is insufficient to raise the argument that the combination of the DISH Set-Top Box or a Sling App, together with a display provided by a

DISH TECHNOLOGIES L.L.C. EXHIBIT 2007, Page 23
Aylo Freesites Ltd. v. Dish Technologies L.L.C.
IPR2024-00516

DISH customer, practices the claims of the Asserted Patents. Accordingly, the Commission finds that DISH's indirect practice theory is waived under the ALJ's Ground Rule 7c.[22]

The Commission rejects as unsupported DISH's contention that it implicitly raised the indirect practice theory during pre-trial proceedings.[23] While claim charts attached to the Complaint showed video signals from a domestic industry product displayed on an iPad (s*ee* Compl., Exh. 112, at DISH-Charts 28, 110, 210, and 281), the Complaint included no allegation of an indirect practice theory. *See* Compl. at 57–61. During the *Markman* briefing, no party presented a position as to whether the asserted claims of the Asserted Patents require (or do not require) a display or the actual display of video content.[24] DISH now contends that it included customer displays as part of its disclosure of domestic industry products. *See* CBr. (Reply) at 2. On September 29, 2021, pursuant to Ground Rule 6f, DISH filed its list of products and services

---

[22] Respondents and OUII also argue that DISH's indirect practice theory was barred by the ALJ's Order No. 22, but because the Commission finds that the argument was waived under the ALJ's Ground Rules, the Commission does not reach that argument.

[23] *See, e.g*., CBr. at 6 ("Together, these documents and images confirm a self-evident fact, which DISH raised as early as its initial complaint (*i.e*., the domestic industry products are used with third-party televisions, phones, computers, and tablets) and maintained throughout discovery.") (citations omitted); CBr.(Reply) at 3–4 ("To be clear, neither DISH's infringement theory nor its technical prong theory has *ever* depended on a product being used with a display because DISH has *never* taken the position that the Asserted Claims require a display. . . . DISH's position has been that, if the ALJ or the Commission adopted Respondents and the IA's belated 'display' theory, DISH has made clear from its initial complaint (and repeatedly since then) the self-evident fact that its [Domestic Industry Products] are used with downstream displays. The very point—the purpose—of DISH's business is to provide video to consumers so they can view it (on a display).") (DISH's emphases).

[24] *See* Complainants' Initial Markman Brief, EDIS Doc. ID 750757 (Sept. 1, 2021); Respondents' Initial Markman Brief, EDIS Doc. ID 750741 (Sept. 1, 2021); Commission Investigative Staff's Initial Claim Construction Brief, EDIS Doc. ID 751939 (Sept. 17, 2021); Joint Claim Construction Chart, EDIS Doc. ID 752481 (Sept. 22, 2021).

DISH TECHNOLOGIES L.L.C. EXHIBIT 2007, Page 24
Aylo Freesites Ltd. v. Dish Technologies L.L.C.
IPR2024-00516

it planned to rely on to satisfy the domestic industry requirement.[25] DISH's list included various services, servers, and set-top boxes, but DISH did not identify any customer's displays in its list. *See, e.g.*, DISH's List of DI Products at 1–2. DISH contends the list included displays,[26] apparently referring to the following: "Sling TV Service available by Sling.com website, or via client applications developed for various *smartphones, tablets, and other streaming devices* such as Android, Apple iOS, Amazon FireOS, Roku, Xbox, LG, Samsung, Comcast, JavaScript, TVOS, Chromecast, and Browsers." *See, e.g.*, DISH's List of DI Products at 1 (emphasis added). However, DISH identified client applications *for devices with displays*, which is different than identifying products that have displays, or identifying the customer displays themselves. Therefore, the Commission finds that DISH waived this argument by not raising it before the ALJ. *See Hazani v. U.S. Int'l Trade Comm'n*, 126 F.3d 1472, 1476 (Fed. Cir. 1997).

Respondents argue that DISH also waived its direct practice theory by not sufficiently presenting that argument in its post-hearing brief. *See* RBr. at 11 (citing Ground Rule 11). OUII further argues that DISH failed to timely present its claim construction argument that underlies that theory and therefore failed to comply with the Ground Rules and procedural schedule. *See, e.g.*, OBr. at 16. The Commission, however, finds that, on balance, DISH presented its direct practice theory and the underlying claim construction with sufficient

---

[25] Complainants' List of Products and Services Complainants' Will Rely on to Satisfy the Domestic Industry Requirement, EDIS Doc. ID 752992 (Sept. 29, 2021) ("DISH's List of DI Products"); Order No. 12, at 10–11; Order No. 13 (Sept. 24, 2021).

[26] CBr. (Reply) at 2 ("But DISH *did* identify third-party displays in its Rule 6.f Disclosure. DISH identified the Sling Fire App as being 'for' devices with displays—specifically, 'smartphones, tablets, and other streaming devices.' *See* Ground Rule 6.f Disclosure at 1–5.").

DISH TECHNOLOGIES L.L.C. EXHIBIT 2007, Page 25
Aylo Freesites Ltd. v. Dish Technologies L.L.C.
IPR2024-00516

particularity to satisfy the ALJ's Ground Rules and procedural schedule. *See* CPreHBr. at 127–28; CPHBr. at 136–37 (discussion of the satisfaction of the technical prong of the domestic industry requirement under the direct practice theory), 11–25 (claim construction).

OUII further argues that the ALJ's Order No. 22 barred DISH from arguing for a claim construction that the "presenting" and "provid[ing]" limitations do not require the end user station to have a display. *See, e.g.*, OBr. (Reply) at 4. The Commission disagrees. The ALJ's Order No. 22 denied DISH's motion in *limine* ("MIL")[27] seeking to strike Respondents' "display" argument as untimely as well as DISH's motion to strike[28] OUII's (and Respondents') arguments that the claims require displays. *See* MIL No. 3 at 7–8; Mtn. to Strike at 3–4. While DISH's motion asked the then-presiding ALJ to construe the claims such that a display is not required, Order No. 22 did not construe the claims. Indeed, the ALJ did not issue any claim construction rulings prior to the Final ID, consistent with the ALJ's Ground Rules. *See* Order No. 12 at 10. Accordingly, the Commission finds that Order No. 22 did not bar DISH from arguing for a claim construction that the "presenting" and "provid[ing]" limitations do not require a display.

The Commission notes that, throughout the investigation, all of the parties relied on the "plain and ordinary meaning" of the relevant terms. *See, e.g.*, ROpp'n to MIL No. 3 at 8 ("Respondents are not seeking a new claim construction of these terms. Rather, Respondents

---

[27] Complainants' Motion in Limine No. 3 to Strike Respondents' Late and Improperly Disclosed Claim Constructions from Their Pre-Hearing and Expert Testimony, EDIS Doc. ID 763380 (Feb. 16, 2022) ("MIL No. 3").

[28] Complainants' Motion to Strike Staff's Late and Improperly Disclosed Claim Constructions and Related Arguments from Staff's Pre-Hearing Brief, EDIS Doc. ID 763979 (Feb. 24, 2022) ("Motion to Strike" or "Mtn. to Strike").

DISH TECHNOLOGIES L.L.C. EXHIBIT 2007, Page 26
Aylo Freesites Ltd. v. Dish Technologies L.L.C.
IPR2024-00516

are simply applying the plain meaning of the express requirements of the claims. . . ."); Mtn. to Strike at 3. The CALJ did not reach this particular claim construction dispute because the Final ID relied exclusively on DISH's indirect practice theory. The Commission finds that theory waived (*see supra* pp. 19–23) and must now assess whether DISH has shown that it satisfies the technical prong requirement through its direct practice theory. Because the claim construction dispute arises under the direct practice theory, that dispute is now squarely presented to the Commission, and "it is the [Commission's] duty to resolve it."[29] *O2*, 521 F.3d at 1362. Accordingly, the Commission turns to the issue of whether the asserted claims require a display.

3. Claim Construction

This claim construction issue relates to the "presenting" and "provid[ing]" limitations of the relevant claims, reproduced below:

Patent	Claim No.	Claim Limitation
'564 Patent	1	[1(j)] wherein the media player streams the video by: … presenting the video by playing back the requested media files with the media player on the end user station in order of ascending playback time.
'156 Patent	1	[1(j)] wherein the media player streams the video by: … presenting the video for playback by providing the requested streamlets in order of ascending start time.
'554 Patent	16	[16(j)] provide the received first streamlet for playback of the live event video.
'555 Patent	10	[10(j)] provide the received streamlets for playback of the video

[29] The Commission could have remanded to the CALJ for claim construction and other further proceedings as necessary, but in the interest of completing this investigation as expeditiously as practicable, it has decided the issue itself. The Commission asked the parties whether the investigation should be remanded to the CALJ for further claim construction regarding whether the "presenting" and "providing"/"provide" limitations require a display. 87 Fed. Reg. at 72511. The parties agreed that the parties' evidence and argument was already presented in the record, and the Commission could make any necessary findings or conclusions. CBr.at 8; RBr. at 16–20; OBr. at 14–17.

DISH TECHNOLOGIES L.L.C. EXHIBIT 2007, Page 27
Aylo Freesites Ltd. v. Dish Technologies L.L.C.
IPR2024-00516

a. The Parties' Arguments

i. DISH's Arguments

DISH's overall argument is that the specification contemplates a broad meaning of "present[ing]" that does not require visually displaying video to a user. *E.g.*, Mtn. to Strike at 17; CResp. at 5. DISH asserts that "the components of the media player 'present' received streamlets for use by other internal components." Mtn. to Strike at 17; CResp. at 8. In DISH's view, the claims "are directed to media players and software for playing media, regardless of whether there is a display connected to them or not." CResp. at 5.

More specifically, DISH argues that the asserted claims "specifically recite which hardware components are required, but never a display," pointing to claim 10 of the '555 patent, which recites only "a processor" and "a digital processing apparatus memory." *E.g.*, CPHBr. at 13 (citing JX-0003 ('555 patent) at claim 10); *see also* CResp. at 5–6. DISH contends that Respondents and OUII improperly attempt to rewrite the claims as follows:

> **10.** A content player device to stream a video over a network from a server for playback of the video, the content player device comprising:
>
> [a] a processor;
>
> [b] a digital processing apparatus memory device comprising non-transitory machine-readable instructions that, when executed, cause the processor to:
>
> ...
>
> provide the received streamlets for playback of the video. and
>
> [c] a display screen or video monitor capable of displaying encoded video from the received streamlets.

CResp. at 5–6.

DISH adds that "[n]either Respondents nor [OUII articulate] why 'provid[ing] the received streamlets for playback of the video' cannot be performed by the claimed 'processor'

and 'digital processing apparatus memory' alone, other than to inject a requirement that Respondents and [OUII] claim DISH failed to prove." *Id.* at 6.

DISH further argues that Respondents' and OUII's focus on the terms "playback" and "playing back" improperly ignores the surrounding claim language. CPHBr. at 14 (citing *Hockerson-Halberstadt, Inc. v. Converse Inc.*, 183 F.3d 1369, 1374 (Fed. Cir. 1999) ("Proper claim construction . . . demands interpretation of the entire claim in context, not a single element in isolation.")); *see also* CResp. at 7. DISH suggests that the relevant limitations of "the '156, '554, and '555 Patents merely recite 'presenting' or 'provid[ing]' data 'for playback.'" CPHBr. at 15; *see also* CResp. at 7. As for the '564 patent, DISH argues that while the relevant limitation recites "by playing back," rather than "for playback," "it specifically ties 'playing back' to the 'requested media files,' which it recites is being played back 'with the media player,' rather than a display." CPHBr. at 15; *see also* CResp. at 8. DISH adds that a "person of ordinary skill in the art would readily appreciate that 'playback' can be achieved by all manner of 'players' that do not have displays, such as VCRs, DVD players, and even the Exoplayer at issue in this Investigation." CPHBr. at 15.

DISH argues that the specifications support its position. *See, e.g.*, CPHBr. at 16–19; CResp. at 7–8. DISH asserts that the specifications do not recite the word "display," *see* CPHBr. at 16, and the specifications explain that the components of the media player "present" received streamlets for use by "other components." CResp. at 8 (citing JX-0001 ('564 patent) at 9:53–58 ("If the network controller module 406 has requested a streamlet 212 in multiple parts, with each part requested on mutually independent TCP/IP connections, the network controller module 406 reassembles the parts to *present* a complete streamlet 212 for use by *all other components* of the client module.") (DISH's emphases)); *see also* CPHBr. at 16–19.

DISH TECHNOLOGIES L.L.C. EXHIBIT 2007, Page 29
Aylo Freesites Ltd. v. Dish Technologies L.L.C.
IPR2024-00516

DISH then addresses Respondents' and OUII's contention (discussed below) that the specifications' discussion of delivering content "to a user" or "viewer" requires a display. *See* CResp. at 6–7; *see also* CPHBr. at 17. DISH contends that Respondents improperly rely on certain examples in the specifications and import details of those examples into the claims. *See* CPHBr. at 17; *see also* CResp. at 6. In response to Respondents' contention that the "purpose" of the invention supports Respondents' and OUII's construction, *see* CPHBr. at 18, DISH argues that "the purpose of the invention, as described in the specification, was not to improve viewing devices; rather, the invention sought to 'alleviate the problems of reliability, efficiency, and latency' that existed in video streaming generally." *Id.* (quoting JX-0001 ('564 Patent) at 2:39–41). According to DISH, these "problems relate to network connectivity between client and server and bandwidth issues—not to anything relevant to the end-user's display device," and that "purpose is what informs the proper construction of the claims." *Id.* DISH further reasons that, because a specification may have multiple purposes, "[n]ot every claim must contain every limitation or achieve every disclosed purpose." *Id.* (quoting *ScriptPro LLC v. Innovation Assocs., Inc.*, 833 F.3d 1336, 1342 (Fed. Cir. 2016)).

DISH next addresses the extrinsic evidence. CPHBr. at 20–25. According to DISH, "the only expert testimony of record, from DISH's technical expert Dr. Negus, confirms [that] the claims do not require a display." *Id.* at 20 (citing Tr. (Negus) 151:9–11 (declaring that "the claims do not recite any requirement of a display, of a physical display, for example, within the claims")). According to DISH, none of "Respondents' experts provided any testimony rebutting Dr. Negus's understanding of how a person of ordinary skill in the art would understand the claim limitations." *Id.* DISH alleges that Respondents mischaracterize testimony from the co-inventors, Messrs. Major and Hurst, by suggesting that their testimony

DISH TECHNOLOGIES L.L.C. EXHIBIT 2007, Page 30
Aylo Freesites Ltd. v. Dish Technologies L.L.C.
IPR2024-00516

related to the claims' requirements (*i.e.*, claim construction), when it was actually just an acknowledgment that "playing back content may also result in displaying that content on a screen." *See id.* at 20–21. Regardless, DISH notes that inventor testimony about claim construction is "of minimal, if any, probative value." *Id.* at 21 (citing, *inter alia*, *E-Pass Techs., Inc. v. 3Com Corp.*, 343 F.3d 1364, 1370 n.5 (Fed. Cir. 2003)).

As to Respondents' dictionary definitions, DISH first asserts that those definitions were not contemporaneous in time with the Asserted Patents and thus should be given no weight. CPHBr. at 21. Second, DISH notes that Respondents omitted any definition of the word "provide," whose definitions include: (1) "make available for use; supply" and "present or yield (something useful)," New Oxford American Dictionary, 2nd ed. (2005), and (2) "to make ready beforehand" and "to prepare for future use," Chambers Dictionary, 10th ed. (2006). *Id.* According to DISH, these "contemporaneous definitions, on the other hand, confirm that 'provide' can be broader than 'present' and merely requires that the streamlet be made 'read[y]' for or supplied for 'future' playback, which supports DISH's view of the claims." *Id.* (bracketed material not in original).

Finally, DISH urges rejection of Respondents' and OUII's argument that DISH's Complaint narrows the scope of the claims to require a display on the grounds that there is no authority for using exemplary illustrations in claim charts to limit claim scope. *See id.* at 22–24.

ii. Respondents' Arguments

Respondents argue that their construction—that the claims require a display—is supported by the plain claim language. *E.g.*, ROpp'n to Mtn. to Strike at 9–10; RPet. at 21–22. Respondents first focus on claim 1 of the '564 patent:

> Here, all of the Asserted Claims are apparatus claims that must present video. For example, the Asserted Claims of the '564 patent recite "[a]n end user station for adaptive-rate content streaming of digital content

DISH TECHNOLOGIES L.L.C. EXHIBIT 2007, Page 31
Aylo Freesites Ltd. v. Dish Technologies L.L.C.
IPR2024-00516

> from a video server over a network . . . comprising: a media player operating on the end user station . . . wherein the media player streams the video by . . . *presenting the video by playing back* the requested media files with the media player on the end user station." JX-0001 ('564 patent) at claim 1; ID at 10–11.

RPet. at 21 (Respondents' emphasis and ellipses). To Respondents, "[t]he plain and ordinary meaning of this limitation, which is supported by the totality of the intrinsic and extrinsic evidence, requires presenting that video by playing on the claimed apparatus (the end user station) such that the user may view the video." *Id.* at 21; *see also* ROpp'n to Mtn. to Strike at 9. Respondents add that "the video, of course, cannot be viewed on an end user station by a user without a visual display of that video." RPet. at 21; *see also* ROpp'n to Mtn. to Strike at 9.

With respect to claim 16 of the '554 patent and claim 10 of the '555 patent, which recite "provid[ing] the . . . streamlet[ ] for playback," Respondents argue that these limitations require "presenting the video because the patents make clear that 'providing' video for playback is tantamount to 'presenting' the video." ROpp'n to Mtn. to Strike at 10; *see also* RPet. at 7. Respondents reason that this is "clear from claim 1 of the '156 patent, which recites 'presenting the video for playback by providing the requested streamlets in order of ascending start time.'" ROpp'n to Mtn. to Strike at 10; *see also* RPet. at 7. Respondents contend that the "language in the '156 patent makes clear that 'providing' is just a form of 'presenting' the streamlets." ROpp'n to Mtn. to Strike at 10; *see also* RPet. at 7.

Next, Respondents point to the specifications, primarily the '564 patent specification. *See* ROpp'n to Mtn. to Strike at 11–12; *see also* RPet. at 21–22. Respondents argue that the '564 patent specification states that the invention is intended to "offer instantaneous viewing." ROpp'n to Mtn. to Strike at 11–12 (quoting JX-0001 ('564 patent) at 2:39–44); *see also* RPet. at 21–22. Respondents add that the specification declares that the end user station is "configured to present content." ROpp'n to Mtn. to Strike at 11–12 (citing JX-0001 ('564 patent) at 6:3–

DISH TECHNOLOGIES L.L.C. EXHIBIT 2007, Page 32
Aylo Freesites Ltd. v. Dish Technologies L.L.C.
IPR2024-00516

17). Respondents contend that the specification makes clear that the verb "present" is used "pursuant to its ordinary meaning in the context of video by referring to the making of a 'presentation,' which . . . cannot happen without a screen on which the presentation is shown." *Id.*; *see also* RPet. at 21. Respondents further reason that the specification "explicitly states that the alleged invention is motivated by this very concern about the quality of the 'presentation' when viewed by the user." ROpp'n to Mtn. to Strike at 11–12 (citing JX-0001 ('564 patent) at 2:4–5); *see also* RPet. at 21–22 (citing JX-0001 ('564 patent) at 1:31–27, 2:39–44). Further, according to Respondents, the specification "confirms that 'playing' the video has its ordinary visual meaning in the context of video. For example, the specification says that 'playing video' is how the video is delivered 'to the end user.'" ROpp'n to Mtn. to Strike at 12 (citing JX-0001 ('564 patent) at 11:55–57 ("[D]elivering 614 streamlets to the end user comprises playing video and[/]or audio streamlets on the viewer 408."); JX-0003 ('555 patent) at 12:23–30 ("[P]laying just a thumbnail view of the stream.")); *see also* RPet. at 21–22.

Respondents then address DISH's arguments regarding the intrinsic evidence. *See* ROpp'n to Mtn. to Strike at 12–13. In response to DISH's argument that "present" can mean that one component of the media player merely makes a signal available to another component, Respondents declare that the "specification makes clear that in the context recited by the claims—the playing of a video, as opposed to the mere downloading or storing of a video—the verb 'present' refers to a visual presentation." *Id.*; *see also* RPet. at 21–22. Respondents further reason that DISH's evidence is "inapposite to the claims, which recite the *media player* (*i.e.*, the 'viewer') is the component that 'present[s] the video *by playing back* the requested media files' ([JX-0001 ('564 patent) at claim 1 (Respondents' emphasis))] or "present[s] the video for playback" ([JX-0004 ('156 patent) at claim 1]). ROpp'n to Mtn. to Strike at 12. To

DISH TECHNOLOGIES L.L.C. EXHIBIT 2007, Page 33
Aylo Freesites Ltd. v. Dish Technologies L.L.C.
IPR2024-00516

Respondents, the "claims are clearly not talking about transmitting a signal from one internal component to another, such as from a network controller to a storage memory, but rather require presenting the video by playing it on the media player, which the patents themselves call the "viewer." *Id.* at 12–13 (citing JX-0001 ('564 patent) at 8:26–27); *see also* RPet. at 21–22. Thus, according to Respondents, the specifications make clear that "presenting," as used in the claims, is used pursuant to its ordinary meaning of visual presentation. ROpp'n to Mtn. to Strike at 13; *see also* RPet. at 21.

iii. OUII's Arguments

OUII argues that the plain and ordinary language of the claims require a display. *See, e.g.*, OPreHBr. at 149–50; OOpp'n to Mtn. to Strike at 2–8. OUII further argues that DISH treated claim 1 of the '564 patent as representative of all asserted claims, and that the language of that claim unambiguously requires a display. *See* OOpp'n to Mtn. to Strike at 8; OBr. at 8–10. Thus, according to OUII, DISH cannot argue that the relevant claims have different scope. *See* OOpp'n to Mtn. to Strike at 8; OBr. at 8–10.

b. The Commission's Determination

The parties do not dispute that the domestic industry products do not have displays; therefore, resolution of this claim construction issue is dispositive of whether DISH satisfied the technical prong requirement for each patent. For their part, Respondents and OUII assert that the plain and ordinary meaning of the claims requires a display. RBr. at 4, 6–14; OPreHBr. at 149–50. Complainants, on the other hand, argue that the plain and ordinary meaning does not require a display. *E.g.*, CResp. at 5.

As an initial matter, the Commission notes that Respondents and OUII rely heavily on the language of claim 1 of the '564 patent and argue that claim 1 is representative of all the other claims of all four patents. *See, e.g.*, RBr. at 7–8; OOpp'n to Mtn. to Strike at 8; OBr. at 8–

DISH TECHNOLOGIES L.L.C. EXHIBIT 2007, Page 34
Aylo Freesites Ltd. v. Dish Technologies L.L.C.
IPR2024-00516

10. However, DISH did not treat the language of claim 1 of the ’564 patent as representative of the language of all asserted claims for claim construction purposes, as OUII contends. *See* CPHBr. at 11–25. Moreover, the claim language of the asserted claims is sufficiently different to require a separate analysis for each patent. The Commission therefore addresses the claims of each patent separately.

For the reasons discussed below, the Commission concludes that the asserted claims of the ’554, ’555, and ’156 patent do not require a display, but the asserted claims of the ’564 patent do. As the Final ID found that all limitations other than the “presenting” and “provid[ing]” limitations are met by the domestic industry products (*see* Final ID at 102–07, 113–14, 129–34, 146–54), the Commission finds that DISH’s domestic industry products practice claims 16 and 17 of the ’554 patent, claims 10, 11, and 14 of the ’555 patent, and claims 1 and 4 of the ’156 patent, but not claims 1, 3, and 5 of the ’564 patent.

i. The ’554 Patent

The Commission finds that the claims of the ’554 patent on which DISH relies to show a domestic industry do not require a display. Independent claim 16 reads as follows:

> [16pre] An end user station to stream a live event video over a network from a server for playback of the video, the content player device comprising:
>
> [16a] a processor;
>
> [16b] a digital processing apparatus memory device comprising non-transitory machine-readable instructions that, when executed, cause the processor to:
>
> [16c] establish one or more network connections between the end user station and the server, wherein the server is configured to access at least one of a plurality of groups of streamlets;

DISH TECHNOLOGIES L.L.C. EXHIBIT 2007, Page 35
Aylo Freesites Ltd. v. Dish Technologies L.L.C.
IPR2024-00516

[16d] wherein the live event video is encoded at a plurality of different bitrates to create a plurality of streams including at least a low quality stream, a medium quality stream, and a high quality stream, each of the low quality stream, the medium quality stream, and the high quality stream comprising a group of streamlets encoded at the same respective one of the different bitrates, each group comprising at least first and second streamlets, each of the streamlets corresponding to a portion of the live event video;

[16e] wherein at least one of the low quality stream, the medium quality stream, and the high quality stream is encoded at a bit rate of no less than 600 kbps; and

[16f] wherein the first streamlets of each of the low quality stream, the medium quality stream and the high quality stream each has an equal playback duration and each of the first streamlets encodes the same portion of the live event video at a different one of the different bitrates;

[16g] select a specific one of the low quality stream, the medium quality stream, and the high quality stream based upon a determination by the end user station to select a higher or lower bitrate version of the streams;

[16h] place a streamlet request to the server over the one or more network connections for the first streamlet of the selected stream;

[16i] receive the requested first streamlet from the server via the one or more network connections; and

[16j] *provide the received first streamlet for playback of the live event video*.

JX-0002 ('554 patent) at claim 16 (emphasis added).[30] DISH relies on claim 16 and dependent claim 17 for purposes of satisfying the domestic industry requirement.

---

[30] The limitations of claim 16, and of the other claims discussed below, have been separated and labeled for clarity.

DISH TECHNOLOGIES L.L.C. EXHIBIT 2007, Page 36
Aylo Freesites Ltd. v. Dish Technologies L.L.C.
IPR2024-00516

The Commission initially notes that it affirms the Final ID's finding that the preamble of claim 16 is not limiting for the reasons explained in the Final ID. *See* Final ID at 66–68, 135. The Commission then turns to, and centers its analysis on, the claim language itself. *See Innova/Pure Water*, 381 F.3d at 1116. First, neither independent claim 16 nor dependent claim 17 explicitly recites a display. The only hardware recited by claims 16 and 17 is a "processor" and a "digital processing apparatus memory device." Second, element 16j recites that the instructions on the memory device cause the processor to "provide the received first streamlet for playback of the live event video." Applying the plain and ordinary meaning, "provide the received first streamlet" is naturally read to mean the digital processing apparatus memory device is sending the received first streamlet to another component "for playback of the live event video." This language does not suggest that there is a requirement that the "digital processing apparatus memory device" or "processor" contain a display that shows the live video. Nor does claim 16 recite that the video is actually played back; rather, it merely recites that the first streamlet is "provide[d] . . . for playback." This implies that the streamlet is provided for a purpose, *i.e.*, for playback. The component that performs any playback of the streamlet permissibly remains unclaimed as claims need not recite every component of an apparatus. *Blackbird Tech LLC v. ELB Elecs., Inc*., 895 F.3d 1374, 1379 (Fed. Cir. 2018).

Moreover, claim 22, which depends on claim 16, recites that "when played back," the streamlets "appear live to a viewer." The phrase "appear live to the viewer" suggests that the user will be able to actually see the video when it is actually played back. This language is consistent with the Commission's conclusion that "providing for playback" does not require a display that actually shows the video to the viewer. Dependent claim 22 adds something more,

DISH TECHNOLOGIES L.L.C. EXHIBIT 2007, Page 37
Aylo Freesites Ltd. v. Dish Technologies L.L.C.
IPR2024-00516

"when played back," and then specifies what the viewer actually sees. On the other hand, claim 16 does not require anything about the viewer viewing the video.

"The specification usually is the best guide to the meaning of the term," and here the specification supports the Commission's reading of claim 16 as not requiring a display. *Phillips*, 415 F.3d at 1315. The specification repeatedly describes a component that receives streamlets and then provides the streamlets to a "viewer," which then plays back the video for the user. JX-0002 ('554 patent) at 16:51–56 ("In one embodiment, the staging module 709 then arranges 912 the streamlets 304 into the proper order, and the agent controller module 702 *delivers 914 the streamlets to the viewer* 708." (emphasis added)), 13:7–10 ("In one embodiment, the agent controller module 702 is configured to interface with a viewer 708, *and transmit streamlets 304 to the viewer* 708." (emphasis added)). While claim 16 did not use the "agent controller module" terminology from the specification, it certainly claims the related functionality of transmitting streamlets to another component, the viewer 708, which is not recited in claim 16. Accordingly, this description in the specification is consistent with interpreting the limitation "provid[ing] the received first streamlet" to mean providing the received first streamlet to an (unclaimed) component that would perform any actual playback of the live event video. This part of the specification shows that playing video and audio streamlets on the viewer 708 is a "further embodiment" that the patentee chose not to claim, and it also confirms that the patentee knew how to claim the function of playing video and audio streamlets on a viewer that contains a display had she wanted to do so. JX-0002 ('554 patent) at 16:51–56 ("In a further embodiment, delivering 914 streamlets 304 to the end user *comprises playing video and or audio streamlets on the viewer 708*." (emphasis added)). A display permissibly remains unclaimed. *See Blackbird*, 895 F.3d at 1379.

DISH TECHNOLOGIES L.L.C. EXHIBIT 2007, Page 38
Aylo Freesites Ltd. v. Dish Technologies L.L.C.
IPR2024-00516

Further, the specification contemplates an embodiment in which the streamlets are reassembled and transferred to an external device. *Id.* at 13:7–13 ("In one embodiment, the agent controller module 702 is configured to interface with a viewer 708, and transmit streamlets 304 to the viewer 708. *Alternatively, the agent controller module 702 may be configured to simply reassemble streamlets into a single file for transfer to an external device such as a portable video player*." (emphasis added)). The Commission's construction of claim 16, which simply requires providing the streamlet to an (unclaimed) component, is consistent with this embodiment.[31]

Lastly, the Commission notes that the extrinsic evidence presented by the parties for claim construction is not particularly probative. As for dictionary definitions argued by the parties, neither Respondents nor OUII offered a dictionary definition for the claim term "provide" in asserted claim 16. *See* ROpp'n to Mtn. to Strike at 13–14; RPHB at 94–97; OOpp'n to Mtn. to Strike at 1–15; OPHB at 149–57. Respondents argue that "the ordinary meaning of 'present' in this context" has a "visual meaning," relying on definitions in the Merriam-Webster and Google dictionaries. ROpp'n to Mtn. to Strike at 13. Respondents appear to treat the terms "present" and "provide" as equivalent. Moreover, the Commission finds that, as DISH points out, the online definitions supplied by Respondents—dated in 2022—are not contemporaneous in time with the Asserted Patents and are therefore not particularly probative. *See* CPHBr. at 21 (citing *Brookhill-Wilk 1, LLC. v. Intuitive Surgical, Inc.*, 334 F.3d 1294, 1299 (Fed. Cir. 2003) (declining to consider references dated "well after" the patent)). Moreover, the definition of the term "present" is not relevant for the '554 patent and the '555

[31] The parties do not rely on the prosecution history, and the Commission does not find the prosecution history to be probative here.

DISH TECHNOLOGIES L.L.C. EXHIBIT 2007, Page 39
Aylo Freesites Ltd. v. Dish Technologies L.L.C.
IPR2024-00516

patents because the claims of those patents do not use the term "present." DISH, on the other hand, provides contemporaneous definitions of the term "provide," which is used in the '554 patent, that are consistent with the Commission's interpretation of the plain and ordinary meaning. Those definitions include: (1) "make available for use; supply" and "present or yield (something useful)," New Oxford American Dictionary, 2nd ed. (2005), and (2) "to make ready beforehand" and "to prepare for future use," Chambers Dictionary, 10th ed. (2006). Respondents did not object to DISH's citation to and reliance on these dictionary definitions. *See* RPHBr. (Reply) at 28–39.

In terms of testimony, DISH relies on expert testimony that the "claims do not recite any requirement of a display, of a physical display, for example, within the claims," CPHBr. at 13 (citing Tr. (Negus) at 151:4–11). The Commission finds that this testimony is too conclusory to be persuasive. Respondents argue that Mr. Major, a named inventor, testified that "in the context of these patents, 'playback'—a term recited in the claims—requires displaying video." ROpp'n to Mtn. to Strike at 10 n.4. However, inventor testimony about claim construction is of minimal, if any, probative value. *E-Pass Techs., Inc. v. 3Com Corp.*, 343 F.3d 1364, 1370 n.5 (Fed. Cir. 2003); *Solomon v. Kimberly-Clark Corp.*, 216 F.3d 1372, 1379 (Fed. Cir. 2000); *Howmedica Osteonics Corp. v. Wright Med. Tech., Inc.*, 540 F.3d 1337, 1347 (Fed. Cir. 2008). Accordingly, the Commission does not rely on the extrinsic evidence to change the plain and ordinary meaning of the claim language. *Helmsderfer v. Bobrick Washroom Equip., Inc.*, 527 F.3d 1379, 1382 (Fed. Cir. 2008) ("A court may look to extrinsic evidence so long as the extrinsic evidence does not contradict the meaning otherwise apparent from the intrinsic record.").

DISH TECHNOLOGIES L.L.C. EXHIBIT 2007, Page 40
Aylo Freesites Ltd. v. Dish Technologies L.L.C.
IPR2024-00516

* * *

Respondents make a number of additional arguments, none of which the Commission finds persuasive. First, Respondents argue that the "provide" function is performed by the "content player device," and that the "plain language of a 'content player device' makes clear that it is the device that plays content, and not merely a network controller component that provides the streamlet to some other device that plays it, contrary to DISH's suggestions." ROpp'n to Mtn. to Strike at 10; RPHBr. at 94. However, the "content player device" language appears only in the non-limiting preamble, and thus Respondents' argument has no merit. Moreover, the express claim language recites "a digital processing apparatus memory device comprising non-transitory machine-readable instructions that, when executed, cause the processor to: . . . provide the received first streamlet for playback of the live event video." The claim does not recite that a "content player device" "plays" anything.

Respondents further argue that the specifications of the Asserted Patents "confirm that the plain meaning of [the disputed limitation] requires presenting video to a user such that the user is viewing the video, which cannot happen without a visual presentation." ROpp'n to Mtn. to Strike at 11. Respondents point to the specification's statement that "'[s]treaming media' refers to technology that delivers content at a rate sufficient for presenting the media to a user in real time as the data is received," such that "[t]he user has the immediate satisfaction of viewing the requested content without wading [sic] for the media file to completely download." *Id.* (quoting JX-0001 ('564 patent) at 1:31–37) (citing also JX-0001 ('564 patent) at 2:39–44).[32] However, the purpose of the invention, as described in the specification, was not to improve

---

[32] Respondents' quoted language from the '564 patent can also be found in the '554 patent. JX-0002 ('554 patent) at 1:47–52.

DISH TECHNOLOGIES L.L.C. EXHIBIT 2007, Page 41
Aylo Freesites Ltd. v. Dish Technologies L.L.C.
IPR2024-00516

viewing devices; rather, the invention sought to "alleviate the problems of reliability, efficiency, and latency" that existed in video streaming, *i.e.*, content delivery, generally. JX-0002 ('554 patent) at 2:58–60 and 1:47-49. Moreover, because an invention may have multiple purposes, "[n]ot every claim must contain every limitation or achieve every disclosed purpose." *ScriptPro LLC v. Innovation Assocs., Inc.*, 833 F.3d 1336, 1342 (Fed. Cir. 2016). There is nothing in the specification that mandates or even suggests that the alleged purpose of real-time viewing of the delivered content or an unclaimed display must be read into these claims.

Respondents also argue that Figure 1 of the '554 patent (reproduced below) shows that the "end user station" includes a display. ROpp'n to Mtn. to Strike at 11.

DISH TECHNOLOGIES L.L.C. EXHIBIT 2007, Page 42
Aylo Freesites Ltd. v. Dish Technologies L.L.C.
IPR2024-00516

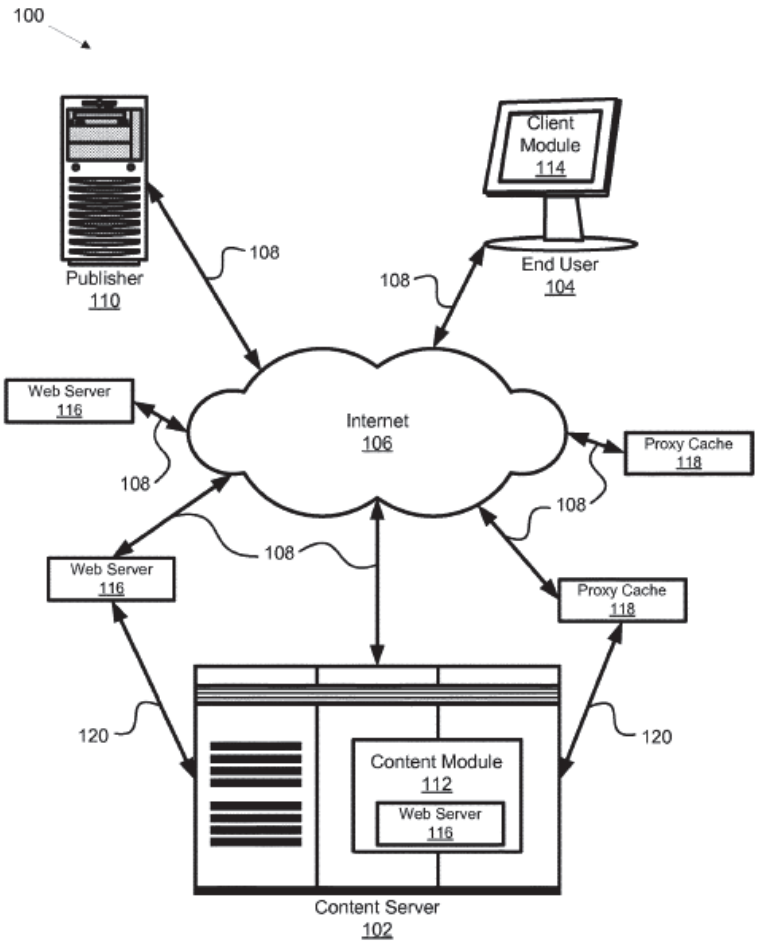

FIG. 1

However, the description of even "a preferred embodiment, in the absence of a clear intention to limit claim scope [to that embodiment] is an insufficient basis on which to narrow the claims." *Decisioning.com*, 527 F.3d at 1314. Here, there is no indication of an intention to limit the claim scope as Respondents seek. Moreover, the patent states that "[t]he end user station 104 may comprise a personal computer (PC), an entertainment system configured to communicate over a network, or a portable electronic device configured to present content" and that "portable electronic devices may include, but are not limited to, cellular phones, portable gaming systems, and portable computing devices." JX-0002 ('554 patent) at col. 6: 44–50. Accordingly, the

patent teaches a number of different devices that can constitute an "end user station," none of which look like the end user station in Figure 1, and not all of them have built in displays, for example, the personal computer. In contrast, the patentee limited other claims to require that content "when played back, appear live to a viewer." *See* JX-0002 ('554 patent) at claim 22. Setting aside whether such contrasting claim language requires actual viewing, claim 16 recites "for playback" with no language indicative that real-time viewing of the delivered content or a display is required.

Finally, Respondents argue that DISH (via the claim charts attached to DISH's Complaint) acknowledged that the asserted claims require a display, and thus DISH implicitly conceded that the claims require a display. *E.g.*, RBr. at 9. The Commission disagrees. DISH states that it included depictions of displays in the Complaint because it is much more tangible to discuss the benefits of the patented technology in the visual context of its products when used with displays. CBr. (Reply) at 6. The Commission agrees that these depictions were for clarity in discussing the technology in general and are not evidence that the claims at issue require a display.

Neither Respondents nor OUII contend that the additional limitations of dependent claim 17 require a different conclusion for those claims. Accordingly, the Commission finds that the claims of the '554 patent asserted for the technical prong of the domestic industry requirement do not require a display.

ii. The '555 Patent

The Commission also finds that the claims of the '555 patent on which DISH relies to show a domestic industry do not require a display. Claim 10 reads as follows:

> [10pre] A content player device to stream a video over a network from a server for playback of the video, the content player device comprising:

DISH TECHNOLOGIES L.L.C. EXHIBIT 2007, Page 44
Aylo Freesites Ltd. v. Dish Technologies L.L.C.
IPR2024-00516

[10a] a processor;

[10b] a digital processing apparatus memory device comprising non-transitory machine-readable instructions that, when executed, cause the processor to:

[10c] establish one or more network connections between the client module and the server, wherein the server is configured to access at least one of a plurality of groups of streamlets;

[10d] wherein the video is encoded at a plurality of different bitrates to create a plurality of streams including at least a low quality stream, a medium quality stream, and a high quality stream, wherein each of the low quality stream, the medium quality stream, and the high quality stream comprises a streamlet that encodes the same portion of the video at a different one of the plurality of different bitrates;

[10e] wherein at least one of the low quality stream, medium quality stream, and high quality stream is encoded at a bit rate of no less than 600 kbps; and

[10f] wherein the streamlet encoding the same portion of the video in the low quality stream has an equal playback duration as the streamlet encoding the same portion of the video in the high quality stream;

[10g] select a specific one of the streams based upon a determination by the client module to select a higher or lower bitrate version of the streams;

[10h] place a streamlet request to the server over the one or more network connections for the selected stream;

[10i] receive the requested streamlets from the server via the one or more network connections; and

[10j] *provide the received streamlets for playback of the video*.

JX-0003 ('555 patent) at 19:45–20:19 (emphasis added). DISH relies on claim 10 and dependent claims 11 and 14 for satisfying the domestic industry requirement.

DISH TECHNOLOGIES L.L.C. EXHIBIT 2007, Page 45
Aylo Freesites Ltd. v. Dish Technologies L.L.C.
IPR2024-00516

The Commission initially notes that, while the Final ID said that "[n]o party . . . explained why any limiting effect of the preamble is relevant to any issue," the Final ID found that, "[t]o the extent such a determination is necessary, . . . the preamble of claim 10 is limiting." Final ID at 153. To the extent the Final ID found that the preamble of claim 10 is limiting, the Commission reverses that finding. The Commission finds that the preamble of claim 10 of the '555 patent is not limiting for the same reasons the Final ID found that the preamble of claim 16 of the '554 patent is not limiting. *See* Final ID at 66–68. Namely, the body of claim 10 recites a structurally complete invention: a processor, a memory device, and instructions that enable streaming video over a network from a server. *See id.*; *Intirtool, Ltd. v. Texar Corp*., 369 F.3d 1289, 1295 (Fed. Cir. 2004) ("If the body of the claim describes a structurally complete invention such that deletion of the preamble phrase does not affect the structure or steps of the claimed invention, the preamble is generally not limiting unless there is clear reliance on the preamble during prosecution to distinguish the claimed invention from the prior art." (internal quotations omitted)); *Am. Med. Sys., Inc. v. Biolitec, Inc*., 618 F.3d 1354, 1358–59 (Fed. Cir. 2010) ("[T]he claim drafters did not rely on the preamble language to define or refine the scope of the asserted claims.").

Moreover, the preamble of claim 10 is duplicative of limitations recited in the claim body. *See Symantec Corp. v. Computer Assocs. Int'l, Inc.*, 522 F.3d 1279, 1289 (Fed. Cir. 2008) (declaring that, when the preamble "is reasonably susceptible to being construed to be merely duplicative of the limitations in the body of the claim," it is "not construe[d] to be a separate limitation"); *see also* Final ID at 68. For example, the preamble states that the purpose of the invention is to "stream a video over a network from a server for playback of the video," and the body of the claim also specifies the content is "receive[d] . . . from the server via the one

DISH TECHNOLOGIES L.L.C. EXHIBIT 2007, Page 46
Aylo Freesites Ltd. v. Dish Technologies L.L.C.
IPR2024-00516

or more network connections" and "provide[ed] . . . for playback of the video." Additionally, the preamble term "content player device" does not appear in the body of the claim. Accordingly, the preamble of claim 10 of the '555 patent is not limiting.

As to the disputed claim language itself, the Commission notes that it is very similar to the disputed language in claim 16 of the '554 patent, discussed above, and the two patents share a specification. Accordingly, the same analysis generally applies. *See Innova/Pure Water*, 381 F.3d at 1116.

Again, none of the relevant claims explicitly recite a display. The only hardware recited by the claims is a "processor" and a "digital processing apparatus memory device." In addition, regarding claim 10j's recitation of the limitation "provide the received streamlets for playback of the video," the plain and ordinary meaning of the phrase "provide the received streamlets" is naturally read to require sending the received streamlets to an (unclaimed) component "for playback of the video." This language does not suggest that there is a requirement that the digital processing apparatus memory device or processor has a display. Moreover, claim 10 does not recite that the video is actually played back, instead it merely recites that the received streamlets are "provide[d] . . . for playback." The component that would perform any playback of the streamlet permissibly remains unclaimed. *See Blackbird*, 895 F.3d at 1379. Nor, in contrast to other claims in the '555 patent, does claim 10 specify that content "appear[s] live to a viewer." For example, dependent claim 17 requires that "when played back," the streamlets "appear live to a viewer." *See* JX-0003 ('555 patent) at claim 17.

Further, the specification supports the Commission's conclusion that the asserted claims of the '555 patent do not require a display, and "the specification usually is the best guide to the meaning of the term." *Phillips*, 415 F3d. at 1315. As discussed above, the specification

DISH TECHNOLOGIES L.L.C. EXHIBIT 2007, Page 47
Aylo Freesites Ltd. v. Dish Technologies L.L.C.
IPR2024-00516

repeatedly describes a component receiving streamlets, then providing the streamlets to a "viewer," which then plays back the video for the user. JX-0003 ('555 patent) at 16:51–56, 13:7–10. This is consistent with interpreting the limitation "provid[ing] the received streamlets" to mean providing the streamlets to an (unclaimed) component that would perform any actual playback of the video. In addition, it shows that the patentee knew how to claim the function of playing video and audio streamlets on a viewer when she wanted to do so. Moreover, the specification contemplates an embodiment in which the streamlets are reassembled and transferred to an external device, which is consistent with the Commission's construction of the claim as simply requiring that the streamlets be provided to an (unclaimed) component for playback. *Id.* at 13:7–13.

The Commission further notes that, for the same reasons discussed above, the extrinsic evidence presented by the parties for claim construction is not particularly probative. Respondents' arguments regarding the '555 patent are unpersuasive for the same reasons, noted above, for the '554 patent. *See supra*, Part IV.b.i.

Neither Respondents nor OUII contend that the additional limitations of dependent claims 11 and 14 require a different conclusion for those claims. For all of these reasons, the Commission finds that the claims of the '555 patent relied upon by DISH for the technical prong of the domestic industry requirement do not require a display.

iii. The '156 Patent

The Commission finds that the claims of the '156 patent on which DISH relies to satisfy the domestic industry requirement also do not require a display. Independent claim 1 reads as follows:

> [1pre] An apparatus for rendering a video that is adaptively received as a digital stream from a video server over a network, the apparatus comprising;

DISH TECHNOLOGIES L.L.C. EXHIBIT 2007, Page 48
Aylo Freesites Ltd. v. Dish Technologies L.L.C.
IPR2024-00516

[1a] a media player operating on the apparatus, wherein the media player is configured to stream the video from the video server via at least one transmission control protocol (TCP) connection over the network,

[1b] wherein the video server stores multiple different copies of the video encoded at different bit rates as multiple sets of streamlets,

[1c] wherein each of the streamlets yields a different portion of the video on playback,

[1d] wherein the streamlets across the different copies yield the same portions of the video on playback, and

[1e] wherein the streamlets in the different copies are aligned in time such that the streamlets that play back the same portion of the video for the different copies each begin at the same playback time in relation to the beginning of the video, and

[1f] wherein the media player streams the video by: requesting sequential streamlets of one of the copies from the video server according to the playback times of the streamlets by transmitting hypertext transport protocol (HTTP) GET requests that identify the selected streamlets stored by the video server,

[1g] wherein the sequential streamlets are selected by the media player from the based upon successive determinations to shift the playback quality to a higher or lower quality one of the different copies of the video;

[1h] repeatedly generating, by the media player, a factor relating to the performance of the network that is indicative of an ability to sustain the streaming of the video;

[1i] adapting the successive determinations to shift the playback quality based on the factor to achieve continuous playback of the video using the streamlets of the highest quality copy of the video that is determined to be sustainable at that time; and

[1j] *presenting the video for playback by providing the requested streamlets in order of ascending start time*.

DISH TECHNOLOGIES L.L.C. EXHIBIT 2007, Page 49
Aylo Freesites Ltd. v. Dish Technologies L.L.C.
IPR2024-00516

JX-0004 ('156 patent) at claim 1 (emphasis added). DISH relies on claim 1 and dependent claim 4 to satisfy the domestic industry requirement.

Initially, the Final ID observed that the parties did not dispute whether the preamble to claim 1 is limiting. *See* Final ID at 115. The Final ID found that "[t]o the extent that the preamble is limiting," the Accused Products satisfy the preamble. *See id.* Like the Final ID, the Commission also takes no position as to whether the preamble is limiting and notes that no party rests its arguments upon the preamble.

Turning to the disputed claim language itself, none of the asserted claims of the '156 patent explicitly recite a display (similar to the case for the claims of the '554 and '555 patents). Limitation 1j recites "presenting the video for playback by providing the requested streamlets in order of ascending start time." Applying the plain and ordinary meaning, the Commission finds the phrase "presenting the video for playback *by providing*" is naturally read to mean sending the requested streamlets to an unclaimed component for playback. This language does not suggest that there is a requirement that the media player display those streamlets on a display of its own. The patentee chose to qualify the term "presenting" with the term "providing" in claim 1. Accordingly, to the extent the term "presenting" has a visual context, as alleged by Respondents, the patentee here specifically chose to limit that term to providing the requested streamlets. ROpp'n to Mtn. to Strike at 11 (arguing that the specification "makes clear that the verb 'present' is used pursuant to its ordinary meaning in the context of video by referring to the making of a 'presentation,' which, of course, cannot happen without a screen on which the presentation is shown") (citing JX-0001 ('564 patent) at 1:37–39).[33] Moreover, the claims show

[33] Respondents' quoted language from the '564 patent can also be found in the '156 patent. JX-0004 ('156 patent) at 1:47–50.

DISH TECHNOLOGIES L.L.C. EXHIBIT 2007, Page 50
Aylo Freesites Ltd. v. Dish Technologies L.L.C.
IPR2024-00516

that, when the patentee wanted to claim *playing* the video, it did so by explicitly reciting that the video is actually played back, as in unasserted independent claim 13, which requires "presenting the video *by playing back the requested media*." JX-0004 ('156 patent) at claim 13.

Respondents argue, in relation to claim 1 of the '156 patent (as well as claim 1 of the '564 patent), that the fact that "these claims specifically recite that the 'media player' is performing the 'presenting' step confirms the plain language of the claims because the 'media player' is a type of 'viewer' that displays the video." ROpp'n to Mtn. to Strike at 9–10 (quoting JX-0004 ('156 patent) at claim 1 and citing JX-0001 ('564 patent) at 8:26–27)). To Respondents, "[t]he claims are clearly not talking about transmitting a signal from one internal component to another, such as from a network controller to a storage memory, but rather require presenting the video by playing it on the media player, which the patents themselves call the 'viewer.'" *Id.* (citing (JX-0001 ('564 patent)) at 8:26–27).[34]

Respondents' argument is premised on their assumption that their claim construction position is correct, *i.e.*, that the recited media player of claim 1 requires hardware that contains a display and is itself a viewer. Claims 1 and 4, however, do not recite a display or a viewer. Rather, they claim an apparatus comprising a "media player" that "operat[es] on the apparatus" and "is configured to stream the video" by carrying out several functions recited in the claim. This claim language does not require that the media player have any particular hardware; it must only be configured to carry out the recited limitations to satisfy the claim. The Commission further notes that the apparatus on which the media player operates may contain a display or other hardware, but the Commission finds that none of that hardware, including a display, is

---

[34] Respondents' citation to the '564 patent can also be found in the '156 patent. JX-0004 ('156 patent) at 8:46–48.

DISH TECHNOLOGIES L.L.C. EXHIBIT 2007, Page 51
Aylo Freesites Ltd. v. Dish Technologies L.L.C.
IPR2024-00516

claimed or required by the claims. *See Blackbird Tech*, 895 F.3d at 1379. Further, the specification, does not teach that the "media player" necessarily contains a screen or display. Respondents point to one embodiment in the specification, which states that: "The viewer 408 may be a media player (not shown) *operating on* a PC or handheld electronic device." JX-0004 ('156 patent) at 8:46–48 (emphasis added). The Commission reads that embodiment to mean that a viewer may be a media player and that the media player is software that runs on a device. It does not read that embodiment to mean that a media player must be a viewer or a device containing a screen or display.

The Commission acknowledges that the patent specification describes another type of media player, a "portable media player," and states that "[m]any portable media players are equipped with network connections and enabled [to] play music or videos." JX-0004 ('156 patent) at 1:35–37. However, these types of portable media players described in this portion of the specification contain hardware and software and are distinguishable from the claimed "media player" of claim 1 as noted above. Moreover, the patentee explained that the functional units described in the specification are referred to as modules, and can be hardware, software, or a combination of both. JX-0004 ('156 patent) at 5:24–54. The media player of claims 1 and 4 is such a functional unit.

The specification further supports the Commission's conclusion that the asserted claims of the '156 patent do not require a display. *Phillips*, 415 F.3d at 1315. Here, the specification in one embodiment describes a component receiving streamlets, then providing the streamlets to a "viewer," which in one preferred embodiment then plays back the video for the user. JX-0004 ('156 patent) at 12:11–16 ("In one embodiment, the staging module 409 then arranges 612 the streamlets into the proper order, and the agent controller module 402 *delivers 614 the streamlets*

DISH TECHNOLOGIES L.L.C. EXHIBIT 2007, Page 52
Aylo Freesites Ltd. v. Dish Technologies L.L.C.
IPR2024-00516

to the viewer 408. In a further embodiment, delivering 614 streamlets to the end user comprises playing video and or audio streamlets on the viewer 408. (emphasis added)); *see also id.* at 3:13–15 (identifying a "staging module" on the logic unit of the apparatus configured to stage the streamlets and arrange the streamlets for playback on a content player). Playing the video streamlets on the viewer 408 as described in this embodiment is consistent with the Commission's interpretation of the media player as software because the media player (software) of claim 1 "present[s] the video for playback by providing the requested streamlets in order of ascending start time" such that the streamlets, as so arranged by the media player, can be played back on an unclaimed content player. Moreover, the specification describes playback as being performed on a "content player," not a "media player," *see id.* at 3:13–15. A content player, unlike a "media player," is hardware. *See* Final ID at 69–71. Furthermore, the specification is consistent with the Commission's interpretation of "presenting" by "providing the requested streamlets" to mean providing the streamlet to an (unclaimed) component that would perform any actual playback.

For the same reasons discussed above, the extrinsic evidence presented by the parties for claim construction is not particularly probative here.

The Commission does not find persuasive Respondents' remaining arguments, many of which were disposed of above. Respondents argue that the "the ordinary meaning of 'present' in this context" has a "visual meaning," relying on definitions in the Merriam-Webster and Google dictionaries. ROpp'n to Mtn. to Strike at 13. However, the Commission finds that, as DISH points out, the online definitions supplied by Respondents—dated in 2022—are not contemporaneous in time with the Asserted Patents and are therefore not particularly probative.

DISH TECHNOLOGIES L.L.C. EXHIBIT 2007, Page 53
Aylo Freesites Ltd. v. Dish Technologies L.L.C.
IPR2024-00516

See CPHBr. at 21 (citing *Brookhill-Wilk 1*, 334 F.3d at 1299 (declining to consider references dated "well after" the patent)).

Respondents argue that a "person of skill, or any person with common sense that has watched a video, would have understood that 'presenting the video by playing back' requires a visual presentation of the video." ROpp'n to Mtn. to Strike at 9. Respondents conflate the language in claim 1 of the '564 patent with the language of this claim, which defines "presenting" as "providing the requested streamlets." Moreover, as discussed above, the claims do not recite a "display," and the Commission cannot amend the claims based on Respondents' "common sense." Rather, the patentee chose how to define their patent right and had a good reason to claim the invention without a display.

Neither Respondents nor OUII contend that the additional limitations of dependent claim 4 require a different conclusion for that claim. Accordingly, the Commission finds that claims 1 and 4 of the '156 patent do not require a display.

iv. The '564 Patent

Unlike the three other asserted patents discussed above, the Commission finds that independent claim 1 of the '564 patent does require a display. Independent claim 1 reads as follows:

> [1pre] An end user station for adaptive-rate content streaming of digital content from a video server over a network, the end user station comprising:
>
> [1a] a media player operating on the end user station configured to stream a video from the video server via at least one transmission control protocol (TCP) connection over the network,
>
> [1b] wherein multiple different copies of the video encoded at different bit rates are stored on the video server as multiple sets of files,

DISH TECHNOLOGIES L.L.C. EXHIBIT 2007, Page 54
Aylo Freesites Ltd. v. Dish Technologies L.L.C.
IPR2024-00516

[1c] wherein each of the files yields a different portion of the video on playback,

[1d] wherein the files across the different copies yield the same portions of the video on playback, and

[1e] wherein each of the files comprises a time index such that the files whose playback is the same portion of the video for each of the different copies have the same time index in relation to the beginning of the video, and

[1f] wherein the media player streams the video by: requesting a plurality of sequential files of one of the copies from the video server based on the time indexes;

[1g] automatically requesting from the video server subsequent portions of the video by requesting for each such portion one of the files from one of the copies dependent upon successive determinations by the media player to shift the playback quality to a higher or lower quality one of the different copies,

[1h] the automatically requesting including repeatedly generating a factor indicative of the current ability to sustain the streaming of the video using the files from different ones of the copies, wherein the set of one or more factors relate to the performance of the network;

[1i] making the successive determinations to shift the playback quality based on the factor to achieve continuous playback of the video using the files of the highest quality one of the copies determined sustainable at that time so that the media player upshifts to a higher quality one of the different copies when the factor is greater than a first threshold and downshifts to a lower quality one of the different copies when the factor is less than a second threshold; and

[1j] *presenting the video by playing back the requested media files with the media player on the end user station in order of ascending playback time*.

JX-0001 ('564 patent) at 13:20–61 (emphasis added). DISH relies on claim 1 and dependent claims 3 and 5 for satisfying the domestic industry requirement.

DISH TECHNOLOGIES L.L.C. EXHIBIT 2007, Page 55
Aylo Freesites Ltd. v. Dish Technologies L.L.C.
IPR2024-00516

The Commission notes that the parties stipulated that the preamble of claim 1 is limiting. Final ID at 80. The Commission adopts that stipulation and treats the preamble as limiting.

As to the claim language itself, the Commission notes that, like the other asserted claims, neither independent claim 1 nor dependent claims 3 or 5 explicitly recites a display. Independent claim 1, however, requires that the media player "present[ ] the video by *playing back* the requested media files with the media player *on the end user station*." While the media player is operating in largely the same way as in claim 1 of the '156 patent—that is, as software that arranges streamlets—claim 1 of the '564 patent further requires that the video be played back with the media player *on the end user station*. Applying the plain and ordinary meaning, the Commission finds that "presenting the video by playing back the requested media files with the media player on the end user station" is naturally read to require that the video actually be shown on a display that forms part of the claimed end user station.

Moreover, the claim language expressly requires presentation of the video "by playing back the requested media files," rather than claiming presentation of the video "by providing the requested streamlets" or presenting a streamlet "for use by all other components." *Compare* JX-0001 ('564 patent) at claim 1 ("presenting . . . *by playing back"* (emphasis added)), *with* JX-0004 ('156 patent) at claim 1 ("presenting . . . *by providing for playback*") (emphasis added). Thus, this claim's express requirement of presenting the video "by playing back . . . on the end user station" indicates that the video must be shown on a display to meet the limitation. Further, in contrast to the claim language of the '156 patent, which refers to presenting the streamlets "for playback," the claim language of the '564 patent refers to actually playing back the streamlets and doing so on the end user station. Nothing in the '564 patent specification runs

DISH TECHNOLOGIES L.L.C. EXHIBIT 2007, Page 56
Aylo Freesites Ltd. v. Dish Technologies L.L.C.
IPR2024-00516

counter to the Commission's conclusion that the asserted claims of the '564 patent require a display.

The Commission finds none of DISH's arguments persuasive for this claim. DISH argues that the "playback" function is performed by executing software, namely the "media player," and that the "plain and ordinary meaning of 'playback' . . . certainly does not require the presence of a physical display." CPHBr. at 14. The Commission disagrees. In the context of the '564 patent and claim 1 in particular, the Commission finds the plain and ordinary meaning of "playing back" the content requires visual display of the content. DISH emphasizes that claim 1 of the '564 patent "specifically ties 'playing back' to the 'requested media files,' which it recites is being played back 'with the media player,' rather than a display." *Id.* at 15. That the media player is the software performing the playback does not foreclose the fact that the claimed end user station also comprises a display.

DISH further argues that the specifications "contemplate a broader meaning that does not require visually displaying or playing video to a user." *Id.* at 16. DISH points out that the specification of the '564 patent "explains that the components of the media player 'present' received streamlets for use by 'other components.'" *Id.* (citing JX-0001 ('564 patent) at 9:53–58 ("If the network controller module 406 has requested a streamlet 212 in multiple parts, with each part requested on mutually independent TCP/IP connections, the network controller module 406 reassembles the parts to *present* a complete streamlet 212 for use by all *other components* of the client module.") (DISH's emphases)). To DISH, "presenting" and "providing" therefore "include no more than making a video signal available to other components"; "[a]ctual display of the video signal is not required." *Id.*

DISH TECHNOLOGIES L.L.C. EXHIBIT 2007, Page 57
Aylo Freesites Ltd. v. Dish Technologies L.L.C.
IPR2024-00516

DISH's focus on the specification's statement regarding "present[ing] a complete streamlet 212 for use by other components" (JX-0001 ('564 patent) at 9:53–58) is misplaced in the context of the '564 patent. Unlike claim 16 of the '554 patent and claim 10 of the '555 patent, which are directed to "provid[ing]" "streamlets" "for playback," claim 1 of the '564 patent is directed to presenting the "video *by playing back* the requested media files." Thus, even if the '564 patent specification uses "present" in a way other than in the sense of "showing," as with the '156 patent, claim 1 of the '564 patent is also distinguishable from claim 1 of the'156 patent, which merely recites "presenting the video *for* playback" and does not require actual playback as does claim 1 of the '564 patent.

Accordingly, the Commission finds that claims 1, 3, and 5 of the '564 patent require a display.

4. Technical Prong

The Commission next applies the claim constructions discussed above to the domestic industry products to determine if DISH satisfied the technical prong of the domestic industry requirement as to the Asserted Patents. *See Alloc*, 342 F.3d at 1375; *Ethicon Endo-Surgery*, 149 F.3d at 1315; *O2 Micro*, 521 F.3d at 1362. Here, the parties chose to frame their dispute around whether the claims require a display. No party disputes that the domestic industry products practice the claims if no display is required, but do not practice the claims if a display is required. *See* RPHBr. at 94–97, 98; RPHBr. (Reply) at 28–39; RBr. at 14–21; OPHBr. at 149–57; OPHBr. (Reply) at 1–18; OBr. at 14–17; CBr. at 4–9. Accordingly, there is no factual dispute for the Commission to resolve here. Moreover, the record demonstrates DISH met its burden to show the domestic industry products practice the relevant claims of the '554, '555, and '156 patents, which do not require a display. *See* CX-0010C (Negus DWS) Q747, 748; CDX-0010C.HS.4, 6, 11 (CX-1210 (element-sink); CX-0356CSC [redacted]; CX-

DISH TECHNOLOGIES L.L.C. EXHIBIT 2007, Page 58
Aylo Freesites Ltd. v. Dish Technologies L.L.C.
IPR2024-00516

[redacted]; CDX-0010C.TEST.164, 171; CX-0814C (Hopper 3 Live News Oct 21.pcapng); CDX-0010C.AS.4 (CX-0998 (exoplayer-amazon-port-amazon-r2.11.3); CDX-0010C.TEST.159, 161 (CX-0812C (Sling on Amazon Fire TV Live News Oct 21.chls); and CX-0813C (Sling on Amazon Fire TV Live Sports Oct 21.chls). The Commission has therefore determined that DISH has shown that the domestic industry products practice claims 16 and 17 of the ’554 patent, claims 10, 11, and 14 of the ’555 patent, and claims 1 and 4 of the ’156 patent.

As for claims 1, 3, and 5 of the ’564 patent, the Commission has determined that DISH has not satisfied the technical prong of the domestic industry requirement. As discussed above, these claims require a display, and it is undisputed that the domestic industry products do not have displays. *E.g.*, RBr. at 10; OPet. at 2. Accordingly, DISH failed to satisfy the domestic industry requirement as to the ’564 patent, precluding a finding of a violation as to that patent.

B. Priority and Anticipation Over a Prior Public Use

Before the CALJ, Respondents argued that a prior public use by Move Networks, Inc. of its Move Media Player anticipated the asserted claims of the ’554 and ’555 patents. *See, e.g.*, Final ID at 217. Respondents argued that the Move Media Player used adaptive bitrate streaming technology to live stream a church event to a public audience over the Internet in October 2005, and that Move continued to use its adaptive bitrate streaming technology to livestream BYUtv channel content over the Internet until at least February 7, 2006. *See id.* (citing RPHBr. at 232). DISH did not dispute that the Move Media Player met the limitations of the asserted claims of the ’554 and ’555 patents, but instead argued that the priority date of the

DISH TECHNOLOGIES L.L.C. EXHIBIT 2007, Page 59
Aylo Freesites Ltd. v. Dish Technologies L.L.C.
IPR2024-00516

asserted claims of those patents predates the public use such that the public use is not prior art. CPHBr. (Reply) at 67–68. Respondents disputed DISH's priority date claim. *See* RPHBr. at 217, 169–72.

The Final ID rejected Respondents' argument, finding that the claims of the '554 and '555 patents are entitled to the priority date of the '831 Provisional Application. *See* Final ID at 172. Because the public use in question was well after that priority date, the Final ID found that Respondents' prior public use invalidity argument failed. *See id.* at 217.

Respondents petitioned for review of the Final ID's finding that the asserted claims of the '554 and '555 patents (referred to herein as the "Live Event Claims") are entitled to claim priority to the '831 Provisional Application and the Final ID's related finding that those claims are not invalid over the alleged prior public use of the Move Media Player. *See* RPet. at 63–69. Respondents argued that the Final ID erred by improperly placing the burden on Respondents to show that the Live Event Claims are not entitled to claim priority to the '831 Provisional Application. *Id.* at 63–64. Respondents further argued that the record does not support a finding that the '831 Provisional Application sufficiently describes and enables streaming live content, as required by the Live Event Claims. *Id.* at 64–68. Respondents thus argued that the Final ID erred in finding that the Live Event Claims are not invalid over the prior public use of the Move Media Player. *Id.* at 68–69.

The Commission determined to review this issue. 87 Fed. Reg. at 72511. On review, the Commission affirms the Final ID and replaces its analysis with the analysis below, which is substantively the same with alterations only to clarify that the Final ID properly applied the relevant burdens in its analysis.

DISH TECHNOLOGIES L.L.C. EXHIBIT 2007, Page 60
Aylo Freesites Ltd. v. Dish Technologies L.L.C.
IPR2024-00516

1. The Applicable Law

A party cannot be held liable for infringement if the asserted patent claim is invalid. *See Pandrol USA, LP v. AirBoss Ry. Prods., Inc.*, 320 F.3d 1354, 1365 (Fed. Cir. 2003). For patents subject to the pre-America Invents Act ("AIA") provision for invalidity for anticipation/lack of novelty, "[a] person shall be entitled to a patent unless . . . the invention was known or *used* by others in this country, *before the invention thereof* by the applicant for patent." 35 U.S.C. §102(a) (pre-AIA) (emphases added). For patents subject to the AIA provision for invalidity for anticipation/lack of novelty, "[a] person shall be entitled to a patent unless . . . the claimed invention was patented, described in a printed publication, or *in public use*, on sale, or otherwise available to the public *before the effective filing date* of the claimed invention." 35 U.S.C. § 102(a)(1) (AIA) (emphases added).[35]

Regarding patent priority dates (relevant for determining whether prior art is before the subject inventions or effective filing dates), 35 U.S.C. § 120 declares:

> An application for patent for an invention disclosed in the manner provided by section 112(a) . . . in an application previously filed in the United States . . . which names an inventor or joint inventor in the previously filed application shall have the same effect, as to such invention, as though filed on the date of the prior application, if filed before the patenting or abandonment of or termination of proceedings on the first application or on an application similarly entitled to the benefit of the filing date of the first application and if it contains or is amended to contain a specific reference to the earlier filed application.

35 U.S.C. § 120.

---

[35] The determination of the priority date dispute here determines whether the claims of the '554 and '555 patents are subject to the pre-AIA or AIA provision for lack of novelty, but the ultimate conclusion of anticipation is the same regardless of which version of the provision applies.

DISH TECHNOLOGIES L.L.C. EXHIBIT 2007, Page 61
Aylo Freesites Ltd. v. Dish Technologies L.L.C.
IPR2024-00516

The Federal Circuit has clarified the burdens of persuasion and production (or "going forward") in the situation (presented here) where an accused infringer asserts that prior art anticipates the claims of an issued patent and the claims would not be anticipated if those claims are entitled to an invention date or effective filing date that is earlier than the prior art (*i.e.*, if the prior art is not truly "prior" art). *See Tech. Licensing Corp. v. Videotek, Inc.*, 545 F.3d 1316, 1326–29 (Fed. Cir. 2008). In that case, the proponent of the invalidity defense (the accused infringer) always maintains the burden of persuasion of showing by clear and convincing evidence that the claims are anticipated by clear and convincing evidence. *See id.* at 1327. The burden of production (or going forward with evidence) is not constant, but rather shifts depending "on where in the process of trial the issue arises." *Id.* The phrase "going forward with evidence" means "both producing additional evidence and presenting persuasive argument based on new evidence or evidence already of record, as the case may require." *Id.* The proponent of the defense has the "burden of going forward with evidence that there is such anticipating prior art." *Id.* Once that is done, the patentee "has the burden of going forward with evidence either that the prior art does not actually anticipate, or . . . that it is not prior art because the asserted claim is entitled to the benefit of a filing date prior to the alleged prior art." *Id.* This requires the patentee to show "not only the existence of the earlier application, but why the written description in the earlier application supports the claim." *Tech. Licensing*, 545 F.3d at 1327. Once, that is done, the burden of going forward again shifts to the proponent of the invalidity defense "to convince the court that [the patentee] is not entitled to the benefit of the earlier filing date." *Id.* Here, "convince" means that, "if the court is not persuaded by clear and convincing evidence that [the proponent] is correct, [the proponent] has failed to carry its

DISH TECHNOLOGIES L.L.C. EXHIBIT 2007, Page 62
Aylo Freesites Ltd. v. Dish Technologies L.L.C.
IPR2024-00516

ultimate burden of persuasion, and its defense of invalidity, based on anticipation . . . fails." *Id.* at 1328.

2. The Commission's Determination

Respondents argue that claims 16, 17 and 20 of the '554 patent and claims 14 and 15 of the '555 patent cannot claim priority to the '831 Provisional Application because the "live event" aspect of the invention in those claims is not sufficiently described and enabled in the '831 Provisional Application. *See* RPHBr. at 108. DISH contends that the '831 Application describes and enables the asserted claims. *See* CPHBr. at 167–70.

Respondents satisfied their initial burden of going forward by producing evidence regarding the public use of the Move Media Player prior to the filing date of the patent applications giving rise to the '554 and '555 patents and evidence that the use of the Move Media Player meets all limitations of the asserted claims of the '554 and '555 patents. *See* RPHBr. at 232–33 (citing, *inter alia*, JX-0062C (Major Tr.) at 120–23, 209–10, 223–25; RX-0394 (LDS Report); RX-0001C (Richardson DWS) at Q/A 374, 377; CX-0008C (Jeffay RWS) at Q/A 195–96)); *see also Tech. Licensing*, 545 F.3d at 1327.

However, DISH satisfied its burden of going forward by producing evidence and persuasive argument that the asserted claims of the '554 and '555 patents are entitled to the benefit of a filing date prior to the Move Media Player public use. *See, e.g.*, CPHBr. at 168–70; *see also Tech. Licensing*, 545 F.3d at 1327. We note that, while Respondents concede that the '831 Provisional Application refers to "live" video, they nevertheless argue that "there is no description of how live video transfer could be done using the system described in the specification such that a [person of ordinary skill in the art] would understand the inventors to actually possess the invention." RPHBr. at 108.

The '831 Provisional Application recites:

DISH TECHNOLOGIES L.L.C. EXHIBIT 2007, Page 63
Aylo Freesites Ltd. v. Dish Technologies L.L.C.
IPR2024-00516

> [0007] In the depicted embodiment, the system 100 also includes a publisher 110, and a web server 116. The publisher 110 may be a creator or distributor of content. For example, if the content to be streamed were a broadcast of a television program, the publisher may be a television or cable network channel such as NBC®, or MTV®. Content may be transferred over the internet 106 to the content server 102, where the content is received by a content module 112. The content module 112 may be configured to receive, process, and store content. In one embodiment, processed content is accessed by a client module 114 configured to play the content on the end user station 104. In a further embodiment, the client module 114 is configured to receive different portions of a content stream from a plurality of locations simultaneously. For example, the client module 114 may request and receive content from any of the plurality of web servers 116.
>
> [0008] Figure 2a is a schematic block diagram graphically illustrating one embodiment of a content file 200. In one embodiment, the content file 200 is distributed by the publisher 110. *The content file 200 may comprise a television broadcast, sports event, movie, music, concert, etc. The content file 200 may also be live or archived content.* The content file 200 may comprise uncompressed video and audio, or alternatively, video or audio. Additionally, the content file 200 may be compressed. Examples of a compressed content file 200 include, but are not limited to, DivX®, Windows Media Video 9®, Quicktime 6.5 Sorenson 3®, or Quicktime 6.5/MPEG-4® encoded content.

JX-0029 ('831 Provisional Application), ¶¶ [0007–08] (emphasis added). As shown in the above-recited paragraphs, the '831 Provisional Application expressly discloses that the "content file 200" may be a "live" event. The '831 Provisional Application further describes methods of streaming content in more detail:

> [0026] Figure 5 is a schematic flow chart diagram illustrating one embodiment of a method 500 for processing content in accordance with the present invention. In one embodiment the method 500 starts 502, and the content module 112 receives 504 content from the publisher 110. Receiving content 504 may comprise receiving 504 a digital copy of the content file 200, or digitizing a physical copy of the content file 200. Alternatively, *receiving 504 content may comprise capturing a radio or television broadcast*. Once received 504, the stream module 302 generates 506 a plurality of streams 202, each stream 202 having a different quality. The quality may be predefined, or automatically set according to end user bandwidth, or in response to pre-designated publisher guidelines.

> [0027] The streamlet module 304 receives the streams 202 and generates 508 a plurality of streamlets 212. In one embodiment, *generating 508 streamlets comprises dividing the stream 202 into a plurality of two second streamlets 212*. Alternatively, the streamlets may have any length less than or equal to the length of the stream 202. *The encoder module 306 then encodes 510 the streamlets according to a compression algorithm*. In a further embodiment, the algorithm comprises a proprietary codec such as WMV9®. The encoder module 306 then stores 512 the encoded streamlets in the streamlet database 308. Once stored 512, the web server 116 may then serve 514 the streamlets. In one embodiment, serving 514 the streamlets comprises receiving streamlet requests from the client module 114, retrieving the requested streamlet from the streamlet database 308, and subsequently transmitting the streamlet to the client module 114. The method 500 then ends 516.

Id. at ¶¶ [0026–27] (emphases added). As indicated, the '831 Provisional Application teaches that live video content may be created and encoded by dividing a content stream into streamlets, for example streamlets of two seconds in length, and then encoding the streamlets at multiple bitrates. *See id*. at ¶ [0027]. A person of skill in the art would understand from these teachings how to make a video stream of a live event available to a viewer before the live event is complete. *See* CX-0008C (Jeffay RWS) at Q/A 36. Based on the above, DISH satisfied its burden of going forward. *See Tech. Licensing*, 545 F.3d at 1327

Since DISH satisfied its burden of going forward, the burden of going forward shifts to Respondents "to convince the [Commission] that [DISH] is not entitled to the benefit of the earlier filing date." *See id.* Again, here, "convince" means that, "if the [Commission] is not persuaded by clear and convincing evidence that [Respondents are] correct, [Respondents have] failed to carry [their] ultimate burden of persuasion, and [their] defense of invalidity, based on anticipation . . . fails." *Id.* at 1328.

Respondents argue that "all the disclosure of how 'live' video could be handled was added in a continuation-in-part application [U.S. Pat. Application No. 11/673,483], filed February 9, 2007." RPHBr. at 109 (citing RX-0001C (Richardson DWS) at Q/A 77). However,

DISH TECHNOLOGIES L.L.C. EXHIBIT 2007, Page 65
Aylo Freesites Ltd. v. Dish Technologies L.L.C.
IPR2024-00516

as explained above, the ’831 Provisional Application teaches the creation and encoding of two-second streamlets that enable and describe the claimed subject matter. As Dr. Jeffay testified, the additional disclosure in CIP Specification relates to specific improvements that use two-pass or multi-pass encoding with parallel encoders. *See* CX-0008C (Jeffay RWS) at Q/A 35. Respondents have thus failed to show by clear and convincing evidence that the asserted Live Event Claims are not entitled to the priority date of the ’831 Provisional Application, and thus Respondents have also failed to show by clear and convincing evidence that the Live Event Claims are anticipated by the Move Media Player’s public use.

C. Whether the Asserted Claims of the ’555 Patent Are Invalid for Misjoinder of Mr. Brueck

Respondents argued to the CALJ that the claims of the ’555 patent are invalid for misjoinder of Mr. Brueck. *E.g.*, RPHBr. at 247. The Final ID rejected that argument. *See* Final ID at 217–18. The ’554 and ’555 patents are part of a line of continuations from the ’483 CIP Application filed in 2007 that added new material to the specification as compared to the ’831 Provisional Application and the ’783 Application, filed in 2004 and 2005, respectively. *See supra*, at Part II.C.; *see, e.g.*, CDX-0008C at 8; RPHBr. at 247. The ’554 and ’555 patents both name Drew Major, Mark Hurst, and Dave Brueck as inventors. JX-0002 (’554 patent) at cover page; JX-0003 (’555 patent) at cover page. Mr. Brueck was not named as an inventor on the ’831 Provisional Application or the ’783 Application. *E.g.*, JX-0002 (’554 patent) at cover page; JX-0003 (’555 patent) at cover page; JX-0065C (Brueck Tr.) at 79:25–80:16. Respondents thus argued that, for Mr. Brueck to be properly named as an inventor on the ’554 and ’555 patents, he must have contributed to conception of something that was added to the ’483 CIP Application in 2007 and then claimed in the ’554 and ’555 patents. *E.g.*, RPHBr. at 247.

DISH TECHNOLOGIES L.L.C. EXHIBIT 2007, Page 66
Aylo Freesites Ltd. v. Dish Technologies L.L.C.
IPR2024-00516

The Final ID rejected Respondents' contention that named inventor Mark Hurst alone conceived of the virtual timeline concept claimed in the '554 patent and Respondents' related contention that the '554 and '555 patents are invalid for misjoinder of Mr. Brueck. *See* Final ID at 217–18 (citing RPHBr. at 247–50). The Final ID found that "Mr. Brueck and Mr. Hurst jointly conceived the virtual timeline aspect of the invention and worked together to reduce it to practice." *Id.* at 218 (citing JX-0065C (Brueck Dep.) at 99:2–6).

Respondents petitioned the Commission to review this issue, arguing that the Final ID failed to make a determination as to whether Mr. Brueck is misjoined on the '555 patent. *See* RPet. at 69–74. Respondents reason that no party disputes that the '555 patent does not include claims directed to virtual timelines. *See id.* at 70–71.

The Commission determined to review the Final ID's finding that the asserted claims of the '555 patent are not invalid for misjoinder of Mr. Brueck. *See* 87 Fed. Reg. at 72511. On review, the Commission agrees with Respondents that the '555 patent does not claim virtual timelines. Nonetheless, the Commission affirms the Final ID on the alternative basis discussed below.

1. The Applicable Law

"A patent is invalid if more or less than the true inventors are named." *Trovan, Ltd. v. Sokymat SA, Irori*, 299 F.3d 1292, 1301 (Fed. Cir. 2002). Section 116 of the Patent Act provides the standard for joint inventorship:

> When an invention is made by two or more persons jointly, they shall apply for patent jointly and each make the required oath, except as otherwise provided in this title. Inventors may apply for a patent jointly even though (1) they did not physically work together or at the same time, (2) each did not make the same type or amount of contribution, or (3) each did not make a contribution to the subject matter of every claim of the patent.

35 U.S.C. § 116.

DISH TECHNOLOGIES L.L.C. EXHIBIT 2007, Page 67
Aylo Freesites Ltd. v. Dish Technologies L.L.C.
IPR2024-00516

"Because conception is the touchstone of inventorship, each joint inventor must generally contribute to the conception of the invention." *Ethicon, Inc. v. U.S. Surgical Corp.*, 135 F.3d 1456, 1460 (Fed. Cir. 1998). Conception exists "when a definite and permanent idea of an operative invention, including every feature of the subject matter sought to be patented, is known." *Sewall v. Walters*, 21 F.3d 411, 415 (Fed. Cir. 1994). In other words, conception is only complete when the "idea is so clearly defined in the inventor's mind that only ordinary skill would be necessary to reduce the invention to practice, without extensive research or experimentation." *Burroughs Wellcome Co. v. Barr Labs., Inc.*, 40 F.3d 1223, 1228 (Fed. Cir. 1994). Inventorship is a question of law based on underlying factual determinations. *Vapor Point LLC v. Moorhead*, 832 F.3d 1343, 1348 (Fed. Cir. 2016).

2. The Commission's Determination

Respondents did not meet their burden of showing misjoinder by clear and convincing evidence. Respondents argue that Mr. Brueck, while named as an inventor on the '555 patent, did not contribute to any subject matter claimed therein. However, the Commission finds that Mr. Brueck contributed to the multi-pass encoding invention claimed in dependent claims 9, 16, and 25 of the '555 patent.

First, claims 9, 16, and 25 of the '555 patent cover multi-pass encoding. The '555 patent describes "multi-pass encoding" as improving streaming for live events. *See, e.g.*, JX-0003 ('555 patent) at 10:65–11:25 ("A system as described above . . . enables multi-pass encoding of live events."). Dr. Jeffay declared that the '555 patent includes an improved way of streaming live events using multi-pass or "two-pass" encoding that resulted in a reduced latency delay of as little as *ten seconds*. CX-0008C (Jeffay RWS) at Q35, 196. At least dependent claims 9, 16, and 25 of the '555 patent expressly claim this improved ten-second delay multi-pass concept. JX-0003 ('555 patent) at claim 9 ("10 second delay"), claim 16 (same), claim 25 (same). Dr.

DISH TECHNOLOGIES L.L.C. EXHIBIT 2007, Page 68
Aylo Freesites Ltd. v. Dish Technologies L.L.C.
IPR2024-00516

Jeffay confirmed that, for the ten-second delay limitations, "the encoding is being done using what the patent calls 'parallel encoding,'" (*i.e.*, multi-pass encoding). Tr. (Jeffay) at 620:17–25; CX-0008C (Jeffay RWS) at Q35.

The Commission finds that Mr. Brueck contributed to the claimed multi-path encoding. Mr. Major, a named co-inventor on the '555 patent, testified that Mr. Brueck "was involved in building certainly the architecture of where you had multiple streams—or multiple servers doing concurrent" encoding of live events. *See, e.g.*, CX-0001C (Major DWS) at Q/A 13, 14, 20, 53; JX-0062C (Major Dep.) at 199:6–200:2; JX-0003 ('555 patent) at Figs. 5a, 5b. Moreover, all three inventors on the '555 patent, including Mr. Brueck, testified that the inventors listed on the Asserted Patents are correct. CX-0001C (Major DWS) at Q/A 10, 20; JX-0062C (Major Dep.) at 123:2–5, 198:17–201:17; JX-0084C (Hurst Dep.) at 41:6–18, 46:3–14; JX-0065C (Brueck Dep.) at 80:17–81:8, 75:13–77:16, 99:2–14; CX-0008C (Jeffay RWS) at Q/A 35, 196, Tr. (Jeffay) at 620:17–25. For example, Mr. Brueck declared: "I had some ideas on how to make that work efficiently and make sure . . . during a live stream, making sure we're keeping up with encoding." JX-0065C (Brueck Dep.) at 80:17–81:5. Mr. Major corroborated Mr. Brueck's contribution to the multi-pass encoding claims of the '555 patent. *E.g.*, JX-0062C (Major Dep.) at 199:6–200:2.

Respondents argue that DISH's contention that the '555 patent claims multi-pass encoding is inconsistent with its position earlier in the investigation that the '831 Provisional Application provides support for the "ten-second delay" claim language of claim 16. *See* RBr. at 26–27 (citing JX-0065C (Brueck Tr.) at 79:25–80:16; RX-0152C (DISH 6/15/21 Rog Resp) at 124, 128). Respondents reason that, because DISH alleged that this claim language has support in the '831 Provisional Application and because Mr. Brueck was not named as an

DISH TECHNOLOGIES L.L.C. EXHIBIT 2007, Page 69
Aylo Freesites Ltd. v. Dish Technologies L.L.C.
IPR2024-00516

inventor on the ’831 Provisional Application, then inventions related to the “ten-second delay” cannot be attributed to Mr. Brueck, and Mr. Brueck is therefore misjoined on the ’555 patent. *See id.* The Commission is not persuaded. First, the ’831 Provisional Application does not include any mention of a ten-second delay. Therefore, DISH’s original contention was mistaken. Second, DISH appears to have recognized that it was mistaken. After discovery and depositions, DISH withdrew claim 16 from the investigation. *See* Order No. 21 (Mar. 3, 2021), *unreviewed by* Comm’n Notice (Mar. 23, 2021). Withdrawal is reasonable (and expected) if the claims do not have priority to the ’831 Provisional Application because, without the benefit of that priority date, claim 16 could be challenged as invalid based on the prior public use of the Move Media Player asserted in this investigation. *See, e.g.*, Final ID at 217.

Respondents additionally argue that the fact that a patent in the same family as the ’555 patent that issued before the ’555 patent expressly claims multi-pass encoding without using the phrase “ten-second delay” shows that the claims of the ’555 patent do not cover multi-pass encoding through the use of the “ten-second delay” language. *See* RBr. at 27. Again, the Commission is not persuaded. We see no relevance to the timing of the issuance of the two patents. Also, the Commission does not agree with Respondents’ unstated assumption that DISH cannot claim its multi-pass encoding invention in different ways in different patents in the same patent family. There are benefits to a patentee that come from claiming certain aspects of an invention in different ways (such as different levels of breadth) in different claims.

Respondents further argue that DISH did not properly preserve its “multi-pass encoding” argument because DISH failed to present the argument in its pre-hearing brief, and therefore DISH was barred from presenting the argument in its post-hearing brief. *See, e.g.*, RBr. at 21–23. The Commission disagrees. This argument is properly part of the investigation at least

DISH TECHNOLOGIES L.L.C. EXHIBIT 2007, Page 70
Aylo Freesites Ltd. v. Dish Technologies L.L.C.
IPR2024-00516

because OUII undisputedly presented this argument in its pre-hearing brief. *See* OPHBr. at 217–18.

Accordingly, for the reasons stated herein, the Commission finds that Respondents failed to meet their burden of showing misjoinder by clear and convincing evidence.

V. REMEDY, BONDING, AND THE PUBLIC INTEREST

In view of the above, the Commission finds a violation of section 337 by Respondents as to claims 1, 2, and 4 of the ’156 patent, claims 16, 17, and 20 of the ’554 patent, and claims 10, 11, 14, and 15 of the ’555 patent. We now turn to the scope of the remedy addressing that violation.

A. Remedy

The Commission has “broad discretion in selecting the form, scope, and extent of the remedy.” *Viscofan, S.A. v. US. Int’1 Trade Comm’n*, 787 F.2d 544, 548 (Fed. Cir. 1986).

1. Limited Exclusion Order

Section 337(d)(1) provides that “[i]f the Commission determines, as a result of an investigation under this section, that there is a violation of this section, it shall direct that the articles concerned, imported by any person violating the provision of this section, be excluded from entry into the United States, unless, after considering the [public interest], it finds that such articles should not be excluded from entry.” 19 U.S.C. § 1337(d)(1).

a. The RD

The RD recommended that the Commission issue an LEO against Respondents. *See* RD at 257–58. The RD further recommended that any LEO include a standard certification provision. *Id.* at 257 (citing *Certain Chemical Mechanical Planarization Slurries & Components Thereof*, Inv. No. 337-TA-1204, Comm’n Op. at 26 (Jan. 6, 2022)). The RD additionally recommended denying Respondents’ request for an enforcement delay of the

DISH TECHNOLOGIES L.L.C. EXHIBIT 2007, Page 71
Aylo Freesites Ltd. v. Dish Technologies L.L.C.
IPR2024-00516

remedy to allow Respondents time to implement non-infringing redesigns. *See id.* at 258. The RD reasoned that neither of the proffered redesigns would be non-infringing alternatives. *See id.* The RD also recommended denial of Respondents' request for an exemption for service and repair of any products already sold to customers under warranty "because respondents have failed to provide evidence that the public interest supports this request and because respondents did not produce any evidence to identify which spare parts are of particular importance or should be permitted entry." RD at 259–60 (citing *Certain Unmanned Aerial Vehicles & Components Thereof*, Inv. No. 337-TA-1133, Comm'n Op. at 27 (Sept. 8, 2020)).

b. The Parties' Arguments

i. DISH's Arguments

DISH supports the RD's recommendation of issuing an LEO and denying Respondents' request for an enforcement delay. *See* CBr. at 24–25. DISH asserts that the "delay sought by Respondents is for their *own* interests, not *public* interests." CBr. (Reply) at 13 (DISH's emphasis); *see also id.* at 13–14. DISH further opposes the carve-outs to the remedial orders requested by Respondents (discussed below). *See id.* at 16–17. DISH additionally opposes the repair and replacement exceptions requested by Respondents (also discussed below). *See id.* at 17.

ii. Respondents' Arguments

Respondents argue that "[i]ssuing a remedy impacting Respondents' Accused Products based on their as-intended use of ExoPlayer, HLS, and/or MPEG-DASH [(standard technologies)] would effectively impact numerous participants in the video streaming industry." RBr. at 31; *see also id.* at 29–33. Respondents reason that DISH's requested remedy, which addresses products "based on third-party standards and protocols" would have an "anti-competitive impact on consumers, requiring a narrowly tailored remedy that lessens the anti-

DISH TECHNOLOGIES L.L.C. EXHIBIT 2007, Page 72
Aylo Freesites Ltd. v. Dish Technologies L.L.C.
IPR2024-00516

competitive impact on U.S. consumers." *Id.* at 32–33.[36] Respondents further assert that "DISH chose to leverage the threat of an ITC remedy against Respondents who do not compete with DISH and simply employ the products and protocols as designed by third-parties who are not part of this Investigation." *Id.* at 32.

Respondents next argue that any LEO should include a "120-day delay to implement non-infringing functionality" via software modifications. RBr. at 33; *see also id.* at 33–36 (citing, *inter alia*, *Certain Personal Data & Mobile Communications Devices & Related Software*, Inv. No. 337-TA-710, Comm'n Final Determination (Dec. 19, 2011) ("*Personal Data Devices*")). Respondents allege that the Final ID's infringement findings are software-based, rather than hardware-based, and therefore software modifications can allegedly render the Accused Products non-infringing. *Id.* at 33. According to Respondents, "[a]llowing the requested 120-day delay period is necessary and appropriate to allow Respondents time to make such software updates, test and debug, and update documentation while protecting the interests of U.S. consumers in having access to Respondents' unique and innovative connected fitness products." *Id.* at 34 (citing, *inter alia*, *Personal Data Devices*, Comm'n Final Determination; *Certain Lithium Ion Batteries, Battery Cells, Battery Modules, Battery Packs, Components Thereof, & Processes Therefor*, Inv. No. 337-TA-1159, Comm'n Op. (Mar. 4, 2021)). Respondents assert that those software updates can take up to "five months or longer to implement." *Id.* at 34–36.

Respondents then argue that any LEO should include a standard certification provision. RBr. at 36–37.

---

[36] The Commission addresses this argument in its discussion of the public interest factors, *infra*.

DISH TECHNOLOGIES L.L.C. EXHIBIT 2007, Page 73
Aylo Freesites Ltd. v. Dish Technologies L.L.C.
IPR2024-00516

Respondents additionally argue that any LEO should expressly exclude hardware components unrelated to streaming, including those not integrated with a display on which video is streamed. *Id.* at 37. Respondents point out that DISH "expressly acknowledge[d] in its Public Interest Statement that 'fitness devices that do not include any streaming components' or 'fitness devices that stream content without infringing the asserted patents' are alternatives to the allegedly infringing functionality of Respondents' Accused Products." *Id.* (quoting DStmt. at 3–4).

Respondents further argue that any LEO should be limited to products found to infringe specific patent claims. RBr. at 37–38. Respondents assert that "Peloton's [redacted] was not accused of infringement of the '564 or '554 patents and was found not to infringe claim 4 of the '156 patent." *Id.* at 37 (citing Final ID at 80 n.14).

Respondents additionally argue that any remedial order should include exceptions that allow Respondents to "continue to update, service, repair or replace any products already sold to consumers before the effective date of any remedial order, and to complete any pending contracts or purchase orders." RBr. at 39 (citing *Certain Sys. for Detecting & Removing Viruses or Worms*, Inv. No. 337-TA-510, Comm'n Op. at 6 (Aug. 23, 2005)).

iii. OUII's Arguments

OUII supports the RD's recommendation of an LEO with a certification provision. *See* OBr. at 21–22. OUII opposes Respondents' request for a 120-day delay for the effectiveness of any remedial orders, reasoning that both DISH and Respondents identified third party like or directly competitive products to the Accused Products. *See* OBr. (Reply) at 12–13.

OUII then addresses Respondents' request for carveouts from the scope of the remedial orders. *See id.* at 13–14. Regarding Respondents' request for an express exclusion for hardware components not integrated with the display on which video is streamed, OUII states

DISH TECHNOLOGIES L.L.C. EXHIBIT 2007, Page 74
Aylo Freesites Ltd. v. Dish Technologies L.L.C.
IPR2024-00516

that an express exemption is unnecessary because such hardware components would not be subject to the remedial orders. *See id*.

OUII also addresses Respondents' request to narrowly tailor the remedial orders to identify the specific products found to infringe and which claims they were found to infringe. *Id.* at 14. OUII responds that the remedial orders should not be limited to products that were actually adjudicated to infringe the Asserted Patents. OBr. (Reply) at 14 (citing *Certain Audio Players & Controllers, Components Thereof, & Prods. Containing the Same*, Inv. No. 337-TA-1191, Comm'n Op. at 24 (Feb. 1, 2022)). However, OUII declares that the orders "should have a carve out for certain of Respondents' Accused Product implementations that were found to be non-infringing of certain claims—specifically Peloton products using the [redacted]." *Id.* (citing Final ID at 128 n.19).

OUII further addresses Respondents' request for an exemption to the remedial orders to continue to update, service, repair, or replace products already sold to customers in the U.S. and to import parts and components necessary for repair or replacement. *See id.* at 15–16. OUII supports the request, reasoning that "U.S. consumers would be harmed if Respondents could not fulfill their warranty obligations, which would potentially render existing owner's [sic] products inoperable." *Id.* at 16.

OUII additionally points out that DISH's proposed remedial orders include a definition of "covered articles" that is different than and inconsistent with the plain language of the accused products in the Commission's notice of investigation. *See* OBr. (Reply) at 10–11. OUII also notes that DISH did not explain why its remedial orders deviate from the notice of investigation. *See id.* at 11. Therefore, according to OUII, the Commission should use the definition provided in the notice of investigation. *See id.*

DISH TECHNOLOGIES L.L.C. EXHIBIT 2007, Page 75
Aylo Freesites Ltd. v. Dish Technologies L.L.C.
IPR2024-00516

c. The Commission's Determination

The Commission has determined to issue an LEO with a standard certification provision. The Commission includes this certification provision to aid Customs and Border Protection ("CBP") in enforcing Commission orders. CBP is not mandated to "accept certification[s] as proof that the articles in question are not covered by the [LEO]." *See, e.g.*, *Certain Robotic Vacuum Cleaning Devices & Components Thereof Such as Spare Parts*, Inv. No. 337-TA-1057, Comm'n Op., at 55 (Feb. 1, 2019) (internal quotation marks omitted). The certification provision allows persons to certify that, to the best of their knowledge and belief, the products being imported are not excluded from entry. This standard provision can only be used for products that have been explicitly adjudicated as non-infringing. *Certain Composite Aerogel Insulation Materials & Methods for Manufacturing the Same*, Inv. No. 337-TA-1003, Comm'n Op. at 62 (Feb. 22, 2018) ("*Composite Aerogel Insulation Materials*") (declaring that CBP "only accepts a certification that the goods have been previously determined by CBP or the Commission not to violate the exclusion order"). Respondents cannot certify as to products that have not been adjudicated to be non-infringing.

The Commission denies Respondents' request that the LEO be narrowly tailored to identify the specific products found to infringe and which patent claims they were found to infringe. RBr. at 37. Tailoring remedies to the specific products found to infringe is inconsistent with Commission practice. *See, e.g.*, *Certain Graphics Sys., Components Thereof, & Consumer Prods. Containing Same*, Inv. No. 337-TA-1044, Comm'n Op. at 66 (Sept. 18, 2018) ("*Graphics Sys.*"); *Certain Audio Players & Controllers, Components Thereof, & Prods. Containing the Same*, Inv. No. 337-TA-1191, Comm'n Op. at 24 (Feb. 1, 2022). Under the Commission's standard practice, LEOs are not limited to any particular product models, but instead cover products of the named respondents that infringe the asserted claims. *Graphics*

DISH TECHNOLOGIES L.L.C. EXHIBIT 2007, Page 76
Aylo Freesites Ltd. v. Dish Technologies L.L.C.
IPR2024-00516

Sys., Comm'n Op. at 66. And, while the Commission has exempted products that were adjudicated in an investigation and found to be non-infringing (*see Certain Audio Players & Controllers, Components Thereof, & Prods. Containing the Same*, Inv. No. 337-TA-1191, Comm'n Op. at 23–24 (Feb. 1, 2022)), and thus products as to which a respondent may take advantage of the standard certification provision, no product here fits both criteria. Respondents seek an exemption for Peloton's [redacted]. However, DISH did not accuse those products of infringing the '554 patent, and thus those products were not actually adjudicated as non-infringing as to that patent. Final ID at 80 n.14, & 135 n.20. In addition, those products were found to infringe claim 1 of the '156 patent and claims 10 and 11 of the '555 patent. *E.g.*, *id.* at 114–15, 126, 153, 157, & 254.

Respondents also request that any LEO explicitly exempt or exclude hardware components that are "not integrated within the display on which video is streamed." RBr. at 37. The Commission denies Respondents' request. Respondents have not identified or explained what hardware components are of concern nor have they pointed to any evidence that such components are non-infringing. In effect, Respondents ask the Commission to pre-approve components as non-infringing that have not been produced by Respondents in this investigation. The Commission declines to provide an exemption for these products inasmuch as they have not been explicitly adjudicated as non-infringing. Covered articles, per the plain English statement in the Complaint (and the notice of investigation and the Commission's remedial orders), are "fitness devices containing Internet-streaming enabled video displays that are capable of using adaptive bit-rate streaming to stream content, Internet-streaming enabled video displays that are capable of using adaptive bit-rate streaming to stream content and that are designed to be incorporated with fitness devices, and *components thereof*." Compl. at 12 (emphasis added).

DISH TECHNOLOGIES L.L.C. EXHIBIT 2007, Page 77
Aylo Freesites Ltd. v. Dish Technologies L.L.C.
IPR2024-00516

However, as discussed in more detail in the public interest section below, the Commission grants Respondents' request for an exemption to the remedial orders to allow Respondents to import components, parts, or products needed to repair or replace products already sold to customers in the United States.

Respondents further seek an exemption for software updates to products already in the United States. *E.g.*, RBr. at 3. Such an exemption is unnecessary because the Commission's remedial orders do not cover electronic transmissions or software already in the United States, and Respondents have stated that the preferred method of updating software would be through internet or Wi-Fi, and not software stored on physical media. *See, e.g.*, *ClearCorrect Operating, LLC v. Int'l Trade Comm'n*, 810 F.3d 1283, 1293–94 (Fed. Cir. 2015); RBr. at 39.

The Commission has also determined to deny Respondents' request for a 120-day delay of the enforcement of the remedial orders to allow Respondents to implement non-infringing functionality through software changes. As Respondents note, the Commission has historically provided a delay to the enforcement of its remedial order when necessary to mitigate a significant public interest concern. *See* RBr. at 34. However, as discussed below, the only significant public interest concern the Commission finds is that of U.S. consumers obtaining service and repair of their existing fitness devices, and that concern will be mitigated by the Commission's determination to include an exemption to the remedial orders (also discussed below).

Regarding Respondents' argument that the issued LEO will affect numerous non-respondents in the video streaming industry, RBr. at 31; *see also id.* at 29–33, the Commission is issuing an LEO in this investigation which, unlike a general exclusion order, will apply only to infringing devices of the Remaining Respondents and are not directed to equipment from

DISH TECHNOLOGIES L.L.C. EXHIBIT 2007, Page 78
Aylo Freesites Ltd. v. Dish Technologies L.L.C.
IPR2024-00516

non-respondents. *See Kyocera Wireless Corp. v. Int'l Trade Comm'n*, 545 F.3d 1340, 1358 (Fed. Cir. 2008) (holding that section 337 only "permits LEOs to exclude only the violating products of named respondents"). And, regarding Respondents' argument that "DISH chose to leverage the threat of an ITC remedy against Respondents who do not compete with DISH and simply employ the products and protocols as designed by third-parties who are not part of this Investigation," RBr. at 32, the Commission notes that the section 337 remedies here are directed to Respondents' products that infringe DISH's patent rights. Third parties have expressed no such concerns given that no third parties have sought to intervene in this investigation nor have any third parties submitted public interest comments in response to the request for such submissions.

Lastly, the issued remedial orders include the definition of "covered articles" that is in the Commission's notice of investigation. DISH's proposed remedial orders include a definition of "covered articles" that is different than the plain language of the accused products in the Commission's notice of investigation. DISH did not provide a persuasive reason for the change; therefore the Commission has determined to use the definition provided in the notice of investigation.

2. Cease and Desist Order

Section 337(f)(1) provides that in addition to, or instead of, the issuance of an exclusion order, the Commission may issue a CDO as a remedy for violation of section 337. *See* 19 U.S.C. § 1337(f)(1). CDOs are generally issued when, with respect to the imported infringing products, respondents maintain commercially significant inventories in the United States or have significant domestic operations that could undercut the remedy provided by an exclusion

DISH TECHNOLOGIES L.L.C. EXHIBIT 2007, Page 79
Aylo Freesites Ltd. v. Dish Technologies L.L.C.
IPR2024-00516

order.[37] *See, e.g.*, *Certain Table Saws Incorporating Active Injury Mitigation Tech. & Components Thereof*, Inv. No. 337-TA-965, Comm'n Op. at 4–6 (Feb. 1, 2017); *Certain Protective Cases & Components Thereof*, Inv. No. 337-TA-780, USITC Pub. No. 4405, Comm'n Op. at 28 (Nov. 19, 2012) (citing *Certain Laser Bar Code Scanners & Scan Engines, Components Thereof & Prods. Containing Same*, Inv. No. 337-TA-551, Comm'n Op. at 22 (June 24, 2007)). For CDOs under section 337(f)(1), Complainants bear the burden of proof on this issue. "A complainant seeking a CDO must demonstrate, based on the record, that this remedy is necessary to address the violation found in the investigation so as to not undercut the relief provided by the exclusion order." *Table Saws*, Comm'n Op. at 5 (citing *Certain Integrated Repeaters, Switches, Transceivers, & Prods. Containing Same*, Inv. No. 337-TA-435, USITC Pub. No. 3547 (Oct. 2002), Comm'n Op. at 27 (Aug. 16, 2002); *see also* H.R. REP. No. 100-40, at 160 (1987)).

a. The RD

The RD recommended that, if the Commission finds a violation of section 337, the Commission issue CDOs to the Respondents. RD at 259–60. The RD reasoned that DISH "adduced sufficient evidence showing that each respondent maintains commercially significant amounts of infringing products in the United States." *Id.* at 259. As noted above, the RD further recommended denying Respondents' request for a service and repair exemption because

---

[37] When the presence of infringing domestic inventory or domestic operations is asserted as the basis for a CDO under section 337(f)(1), Commissioner Schmidtlein does not adopt the view that the inventory or domestic operations needs to be "commercially significant" in order to issue the CDO. *See, e.g.*, *Certain Magnetic Tape Cartridges & Components Thereof*, Inv. No. 337-TA-1058, Comm'n Op. at 65 n.24 (Apr. 9, 2019); *Table Saws*, Comm'n Op. at 6 n.2 (Feb. 1, 2017). In Commissioner Schmidtlein's view, the presence of some infringing domestic inventory or domestic operations, regardless of its commercial significance, provides a basis to issue a CDO.

DISH TECHNOLOGIES L.L.C. EXHIBIT 2007, Page 80
Aylo Freesites Ltd. v. Dish Technologies L.L.C.
IPR2024-00516

Respondents "failed to provide evidence" supporting the request and because Respondents "did not produce any evidence to identify which spare parts are of particular importance or should be permitted entry." *Id.* at 259–60 (citing *Certain Unmanned Aerial Vehicles & Components Thereof*, Inv. No. 337-TA-1133, Comm'n Op. (Sept. 8, 2020)).

b. The Parties' Arguments

i. DISH's Arguments

DISH argues that the Commission should issue CDOs because Respondents maintain a commercially significant inventory of the infringing products in the United States. *See* CBr. at 25 (citing *Certain Electric Skin Care Devices, Brushes & Chargers Therefore, & Kits Containing the Same*, Inv. No. 337-TA-959, Comm'n Op. at 26 (Feb. 13, 2017)). DISH states that the "evidence of record here establishes that each Respondent has approximately [redacted]." *Id.* DISH provides the data below:

Respondent	Volume (Units)	Time (Months)
iFIT Respondents	[redacted]	[redacted]
Peloton	[redacted]	[redacted]

Id. (citing CX-0007C (Vander Veen DWS) at Q/A 95–97). DISH reasons that "CDOs are therefore needed to prevent Respondents from undercutting the remedial effect of the requested LEO with these commercially significant inventories." *Id.*

ii. Respondents' Arguments

Respondents argue that any CDO should be "narrowly tailored given that DISH and Respondents are not competitors, and any infringement by Respondents is predicated on Respondents' use of off-the-shelf third-party software and protocols." RBr. at 38. Respondents further contend that any CDO should be tailored consistent with its arguments regarding LEOs

DISH TECHNOLOGIES L.L.C. EXHIBIT 2007, Page 81
Aylo Freesites Ltd. v. Dish Technologies L.L.C.
IPR2024-00516

above, and that they should be permitted to update current inventory with non-infringing software. *Id.*

iii. OUII's Arguments

OUII agrees with DISH that the Commission should issue CDOs directed to each Respondent, based on the inventory and sale data discussed in the RD. *See* OBr. at 23.

c. The Commission's Determination

The Commission has determined to issue a CDO directed to each of the Remaining Respondents based on Respondents' inventory data.[38] Respondents do not dispute that they each have commercially significant domestic inventories. For the reasons discussed above in our analysis of the requested LEO, the Commission has also determined to (1) deny Respondents' request for a 120-day delay of the CDOs; (2) include in the CDOs a provision that indicates that the Remaining Respondents may import articles for use in service, repair, or replacement of devices sold to U.S. consumers as of the date of the CDO (discussed in more detail below); (3) deny Respondents' request that the CDOs be narrowly tailored to identify the specific products found to infringe and the claims they were found to infringe; and (4) use the definition of "covered articles" found in the notice of investigation. Again, Respondents' request for an exemption for software updates to products already in the United States is unnecessary because the Commission's remedial orders do not cover electronic transmissions or software already in the United States, and Respondents have stated that the preferred method of updating software would be through internet or Wi-Fi, and not software stored on physical

---

[38] Commissioner Schmidtlein agrees that a CDO should issue directed to each of the remaining Respondents, but she differs from the majority with respect to the basis for that determination. *See supra* note 37 (". . . the presence of some infringing domestic inventory or domestic operations, regardless of its commercial significance, provides a basis to issue a CDO.").

DISH TECHNOLOGIES L.L.C. EXHIBIT 2007, Page 82
Aylo Freesites Ltd. v. Dish Technologies L.L.C.
IPR2024-00516

media. *See ClearCorrect*, 810 F.3d at 1293–94; RBr. at 3. Also, regarding Respondents' argument that a CDO will affect numerous non-respondents in the video streaming industry, RBr. at 31; *see also id.* at 29–33, the Commission again notes that the CDOs are directed to Respondents' activities in the United States with respect to their infringing products.

B. Public Interest[39]

Section 337 requires the Commission, upon finding a violation of section 337, to issue an LEO "unless, after considering the effect of such exclusion upon the public health and welfare, competitive conditions in the United States economy, the production of like or directly competitive articles in the United States, and United States consumers, it finds that such articles should not be excluded from entry." 19 U.S.C. §§ 1337(d)(l) & (g)(1). Similarly, the Commission must consider these public interest factors before issuing a CDO. 19 U.S.C. §§ 1337(f)(1), (g)(1).

Under appropriate facts and circumstances, the Commission may determine that no remedy should issue because of the adverse impacts on the public interest. *See, e.g.*, *Certain Fluidized Supporting Apparatus & Components Thereof*, Inv. Nos. 337-TA-182/188, USITC Pub. 1667, Comm'n Op. at 1–2, 23–25 (Oct. 1984) (finding that the public interest warranted denying the complainant's requested relief). Moreover, when the circumstances of a particular investigation require, the Commission has tailored its relief in light of the statutory public interest factors. *E.g.*, *Certain Microfluidic Devices*, Inv. No. 337-TA-1068, Comm'n Op. at 1, 22–48, 53–54 (Jan. 10, 2020).

---

[39] The Commission did not instruct the ALJ to make findings on the public interest. *See* 86 Fed. Reg. at 6916.

DISH TECHNOLOGIES L.L.C. EXHIBIT 2007, Page 83
Aylo Freesites Ltd. v. Dish Technologies L.L.C.
IPR2024-00516

The statute requires the Commission to consider and make findings on the public interest in every case in which a violation is found regardless of the quality or quantity of public interest information supplied by the parties. 19 U.S.C. §§ 1337(d)(l), (f)(l), and (g)(1). Thus, the Commission publishes a notice inviting the parties as well as interested members of the public and interested government agencies to gather and present evidence on the public interest at multiple junctures in the proceeding. *See* 19 U.S.C. §§ 1337(d)(l), (f)(l), and (g)(1). The Commission's solicitation of public interest comments following the ALJ's RD did not result in submissions from third parties. The Commission did not receive any comments from the public in response to the Commission's notice of review of the Final ID, which also invited public interest comments from interested government agencies and interested persons.

The parties filed submissions on the public interest pursuant to Rule 210.50(a)(4)(i), 19 C.F.R. § 210.50(a)(4)(i), on October 11, 2022.

1. The Public Health and Welfare

Respondents contend that the remedial orders would deprive U.S. consumers of the health benefits from using their fitness devices and interfere with efforts to promote public health through exercise. *See* iStmt. at 2–3; PStmt. at 2–4.

DISH, on the other hand, argues that exclusion of the products at issue would not deprive the public of products necessary for some important health or welfare need of the type for which the Commission has previously denied issuing remedial orders. *See* DStmt. at 1–2. DISH declares that non-accused exercise equipment can provide the same health and welfare benefits as the accused products. *See* CBr. at 37–38. For example, DISH points to the following exercise programming available to United States consumers relating to public health through exercise:

DISH TECHNOLOGIES L.L.C. EXHIBIT 2007, Page 84
Aylo Freesites Ltd. v. Dish Technologies L.L.C.
IPR2024-00516

Activity	DISH[40]	Peloton[41]	iFIT	MIRROR
Yoga	Everyday Yoga	Flow and Let Go	Transformative Yoga[42]	Yoga Flow[43]
Strength	Muscle Over Matter	Total Strength	Strength Training for Beginners[44]	Strength Total Body
Cardio/Aerobic	Dance Jam Pop and Hip-Hop Cardio Dance	Dance Cardio	Bodyweight Cardio Series[45]	Dance Cardio[46]
Meditation	Meditation Basics	Cultivate Inner Calm	iFIT Mind™ Panama Meditation Series[47]	Meditation[48]
HIIT/Bootcamp	HIIT Afterburn	Bootcamp Explorer	Dynamic High Intensity Series[49]	Bootcamp[50]

Id. at 27–28. DISH additionally points to exercise equipment provided by non-respondents that users can use to stream exercise programming onto their own tablets or smartphones. *Id.* at 31–34. This equipment includes a holder for a tablet or smart phone, but does not come equipped with an integrated streaming display. *See id.* Representative examples include the Lanos Exercise Bike and the Sole Fitness F80 Treadmill. *See id.* at 31.

---

[40] https://my.dish.com/subscription-on-demand/grokker; https://www.sling.com/channels/grokker.

[41] https://www.onepeloton.com/classes.

[42] https://www.ifit.com/blog/series-feature-costa-rica-transformative-yoga-series/.

[43] https://www.mirror.co/classes/yoga-flow.

[44] https://www.ifit.com/blog/strength-training-for-beginners.

[45] https://www.ifit.com/blog/get-big-results-from-short-workouts.

[46] https://www.mirror.co/classes/dance-cardio.

[47] https://www.ifit.com/blog/try-these-meditation-workouts-with-8-ifit-mind-trainers-and-guides.

[48] https://www.mirror.co/classes/meditation.

[49] https://www.ifit.com/blog/workout-series-december-2021.

[50] https://www.mirror.co/classes/bootcamp.

DISH TECHNOLOGIES L.L.C. EXHIBIT 2007, Page 85
Aylo Freesites Ltd. v. Dish Technologies L.L.C.
IPR2024-00516

OUII makes similar arguments as DISH. *See* OBr. at 34. Specifically, OUII states that "[w]hile U.S. consumers may be impacted to some extent due to the lack of like or directly competitive products in the market, the infringed claims do not generally cover all fitness devices with streaming capabilities—they cover only a particular method of streaming content (i.e., adaptive, multi-bit rate streaming)." *Id.* OUII further argues that "both parties have now identified several third-party competitive products in their respective opening submissions." OBr. (Reply) at 19. Regarding Respondents, OUII points out Respondents' reference to products by Tonal, Hammerhead/Sram Karoo, Stryde, Sole, JAXJOX, Hydrow, Aviron, and Echelon. *See id.* at 19 (citing RBr. at 48 n. 14). Those products include various exercise bikes, treadmills, and rowers with displays for viewing streaming content. *See* RBr. at Exhs. 9–14.

The Commission finds that the remedial orders will not adversely affect the public health and welfare such that denying a remedy would be warranted. The Commission is issuing an LEO in this investigation which, unlike a general exclusion order, will apply only to infringing devices of the Remaining Respondents, not equipment from other manufacturers. *See Kyocera*, 545 F.3d at 1358 (holding that section 337 only "permits LEOs to exclude only the violating products of named respondents"). Moreover, while access to fitness equipment in the United States may be impacted to some extent due to exclusion of infringing articles, the infringed claims do not generally cover all fitness devices, or even all fitness devices with streaming capabilities—they cover only infringing apparatuses using a particular method of streaming content (*i.e.*, adaptive, multi-bitrate streaming). The Commission also notes that the formerly-accused MIRROR products, which are terminated from the investigation due to the settlement between MIRROR and DISH, will be available to United States consumers.

DISH TECHNOLOGIES L.L.C. EXHIBIT 2007, Page 86
Aylo Freesites Ltd. v. Dish Technologies L.L.C.
IPR2024-00516

As DISH and OUII point out, consumers will still have access to numerous other ways of getting exercise, both those that involve streaming content as well as options that do not. *See* CBr. at 27–28, 31–34; OBr. (Reply) at 19. While these alternative products may not be exact replacements for excluded articles because they do not have the same equipment or the same interactive elements of the infringing devices, this difference is not sufficient to warrant denial of relief. The correct assessment is whether there are "reasonable substitutes for the devices subject to the exclusion order," not whether "every consumer cannot obtain the exact device desired." *Certain Elec. Digital Media Devices & Components Thereof*, Inv. No. 337-TA-796, Comm. Op. at 120 (Sept. 6, 2013) ("*Elec. Digital Media Devices*"); *see also Certain Table Saws Incorporating Active Injury Mitigating Tech. & Components Thereof*, Inv. No. 337-TA-965, Comm'n Op. at 9 (Feb. 1, 2017) (declaring that "products need not be identical to serve as reasonable substitutes for each other").

Further, Respondents assert they are able to modify their products to render them non-infringing, and that they are able to do so within approximately five months. *See* RBr. at 34–35. Should Remaining Respondents do so, and obtain formal rulings from CBP or the Commission that their products no longer infringe, those products would not be covered by the LEO and CDOs. Moreover, customers who have already purchased fitness equipment can continue to receive software updates (because the remedial orders do not cover electronic transmission), as well as repairs and replacement under the service, repair, and replacement exemption the Commission is granting to the LEO and CDOs. Accordingly, the public health and welfare would not be adversely impacted by the remedial orders such that denying a remedy would be warranted based on the public health and welfare.

DISH TECHNOLOGIES L.L.C. EXHIBIT 2007, Page 87
Aylo Freesites Ltd. v. Dish Technologies L.L.C.
IPR2024-00516

2. Competitive Conditions in the United States Economy

Respondents argue that DISH's infringement allegations are broader than fitness devices because the allegations can allegedly reach any device that uses the adaptive bitrate video streaming functionality of ExoPlayer, HLS, fragmented MPEG and/or MPEG-DASH. *See* RBr. at 46–47; *see also, e.g.*, MStmt. at 3–4. Thus, Respondents argue that "to the extent such use is infringing, it implicates not only Respondents, but also numerous other streaming video providers in the U.S., some of whom *do compete with DISH*." RBr. at 46–47 (Respondents' emphasis).

OUII states that it is not aware of any record evidence suggesting an adverse impact. *See* OBr. at 34–35. OUII declares that, to the extent Respondents allege that the remedial orders affect products of non-parties, DISH is not seeking a general exclusion order and thus the requested remedy would not affect those products. *See id.* at 35–36.

DISH argues that "[w]hen assessing competitive conditions in the U.S. economy, 'the appropriate standard is not that no remedy should issue if every consumer cannot obtain *the exact device* desired that was found to infringe the patents at issue.'" CBr. at 29 (citing *Certain Elec. Digital Media Devices*, Comm. Op. at 120) (DISH's emphasis).

The Commission finds that competitive conditions in the United States economy would not be adversely affected by the Commission's remedy. As discussed above, there are reasonable substitutes for the devices subject to the exclusion order, such that exclusion of the Remaining Respondents' infringing devices will not adversely affect competitive conditions in the United States. Respondents contend that DISH's infringement allegations against products using standard implementations of third party ExoPlayer, HLS, fragmented MPEG and/or MPEG-DASH implicates "numerous other streaming video providers in the U.S., some of whom *do compete with DISH*." RBr. at 46 (Respondents' emphasis). However, the requested

DISH TECHNOLOGIES L.L.C. EXHIBIT 2007, Page 88
Aylo Freesites Ltd. v. Dish Technologies L.L.C.
IPR2024-00516

remedial orders in this investigation are not directed to third parties because DISH has not requested a general exclusion order. *See Kyocera*, 545 F.3d at 1358; *see also Certain Mobile Devices, Associated Software, & Components Thereof*, Inv. No. 337-TA-744, Comm'n Op. at 30–31 (June 5, 2012) ("[T]he present limited exclusion order does not exclude all Android mobile devices, and that if a combination of Commission orders and district court rulings in the future leads to a significant constraint on the availability of mobile devices, the Commission has established procedures for modification or rescission of exclusion orders based on changed facts or public interest considerations."). We also note that the streaming video providers that compete with DISH are not even sellers of the types of products, fitness devices, that are covered by the remedial orders.

3. Production of Like or Directly Competitive Articles in the United States

Respondents argue that DISH's set-top boxes and Sling TV apps are not like or directly competitive products whose production could be impacted by any remedy issued in this investigation. *See* RBr. at 50. Respondents further assert that, even if they were, the set-top boxes are imported, not manufactured domestically. *See id.* at 50–51.

DISH argues that the record does not show domestic production of any like or directly competitive products that would be subject to its requested remedial orders, and thus no domestic production would be adversely affected by those orders. *See* CBr. at 36.

OUII declares that it is not aware of any evidence of record regarding the impact of the requested remedial orders on the production of like or directly competitive articles in the United States. *See* OBr. at 33. OUII asserts that the Accused Products are not manufactured in the United States. *Id.*

DISH TECHNOLOGIES L.L.C. EXHIBIT 2007, Page 89
Aylo Freesites Ltd. v. Dish Technologies L.L.C.
IPR2024-00516

The Commission finds that its remedy will not affect the production of like or directly competitive articles in the United States. The record does not indicate that any competitive products are manufactured in the United States, including the Accused Products and the domestic industry products.

4. United States Consumers

Respondents argue that existing United States customers would be impacted by the remedial orders to the extent those orders do not contain adequate exemptions for updates, service, repair, and replacement. *See* RBr. at 45–46. Respondents allege that they provide warranties for their products. *See id.* Respondents further argue that there are no adequate substitutes for their accused products. *See id*. at 49–50.

DISH argues that there will be no impact of the remedial orders on United States consumers. *See id.* at 40–41. DISH argues that there are many alternative fitness products available to consumers, including those of third parties. *See id*. at 29–35. DISH then asserts that the Commission should not deny a remedy merely because every consumer may not be able to obtain the exact device wanted, but rather, the Commission should consider, in the aggregate, whether there are reasonable substitutes. *See id.* (citing *Elec. Digital Media Devices*, Comm'n Op. at 120). DISH then declares that each respondent offers a mobile fitness application that can be used on their customers' existing tablet or smart phone. *See id.* at 29–30.

OUII asserts that the requested remedial orders will not affect current owners of accused products. *See* OBr. at 28–30. OUII reasons that the continued streaming of content would not fall within the plain language of the remedial orders. *See id.* at 28–30. OUII supports Respondents' request for a service and repair exception. *See* OBr. (Reply) at 17. OUII further argues that both DISH and Respondents have "identified several third party competitive products in their respective opening submissions." OBr. (Reply) at 19. OUII additionally

DISH TECHNOLOGIES L.L.C. EXHIBIT 2007, Page 90
Aylo Freesites Ltd. v. Dish Technologies L.L.C.
IPR2024-00516

points out that there are relatively straightforward design changes available to Respondents that would render their products non-infringing, such as modifying those products to stream at a constant bitrate. *See* OBr. at 32.

The Commission has determined to include exemptions to the remedial orders for repair or, under warranty terms, replacement of products purchased by consumers prior to the date of the remedial orders.[51] Here, the Commission considers the public interest regarding potential

---

[51] Commissioner Karpel concurs with the majority that an exemption from the remedial orders is appropriate under the facts of this investigation to permit the Respondents to import and use component parts for service and repair of damaged fitness devices that are in the hands of U.S. consumers. This exemption is supported by the record and is necessary to mitigate harm to U.S. consumers. However, Respondents' argument regarding harm to U.S. consumers to the ALJ and the Commission in this respect was restricted to components: "[i]f Respondents' customers are denied service, repairs or replacement parts, customers owning an Accused Product would be harmed, for example by losing access to warranty repairs." RPHBr. at 296; RBr. at 40 ("Respondents' customers in the U.S. would be harmed by losing access to warranty repairs or other repairs to which they're contractually entitled, for example under an extended protection plan."); *see also* OBr. (Reply) at 16 ("Thus, U.S. consumers would be harmed if Respondents could not fulfill their warranty obligations, which would potentially render existing owner's products inoperable.").

While Respondents would benefit from an exemption that permits them to continue to import infringing fitness devices so that they could avoid breaching their warranty obligations, the warranties of record do not necessarily require Respondents to supply as a replacement the identical fitness device purchased by the consumer. *See, e.g.*, RX-0094 at 20 ("If a defect arises in the Peloton Bike or a warranted component within the applicable Limited Warranty period, the purchaser's sole and exclusive remedy is for Peloton to, at Peloton's discretion to the extent permitted by law, either replace or repair the defective or malfunctioning Peloton Bike or component with the same or a comparable model."); https://www.nordictrack.com/warranty-terms-and-conditions (cited in OBr. (Reply) at 16 n.6) ("iFIT's obligation under this warranty is limited to repairing or replacing, at iFIT's discretion, the product through one of its authorized service providers."). Given Respondents retain discretion to replace fitness devices with alternative non-infringing fitness devices, she finds the record lacks evidence of harm to U.S. consumers to warrant an exemption for replacement of fitness devices in contrast to the record evidence of the harm to consumers who need access to component parts for service and repair of their fitness devices as discussed in the opinion. *See Certain Cloud-Connected Wood-Pellet Grills & Components Thereof*, Inv. No. 337-TA-1237, Comm'n Op. at 17–18 (May 24, 2022) (denying request for exemption for replacement parts where the evidence in the record is insufficient to support specific harm to consumers such that "without such facts, any alleged

DISH TECHNOLOGIES L.L.C. EXHIBIT 2007, Page 91
Aylo Freesites Ltd. v. Dish Technologies L.L.C.
IPR2024-00516

harm to U.S. consumers by virtue of our remedial orders and in so doing considers consumers' expectation regarding the ability to obtain service, repair, and, if provided under warranty terms, replacement of the articles at issue at the time of purchase. Relevant to such expectation is Respondents' offering of warranties and the terms of those warranties. *See* RBr. (Reply) at 16 (citing RX-0094 (Peloton Bike Manual)); OBr. (Reply) at 16 (citing https://www.nordictrack.com/warranty-terms-and-conditions). The Peloton Bike Manual includes various components and the warranty terms for those components. *See, e.g.*, RX-0094 (Peloton Bike Manual) at 20 (declaring, for example, that the touchscreen has a 12-month warranty). OUII points out that Peloton appears to offer similar warranties for its other products and the other Respondents offer similar warranties. *See* OBr. (Reply) at 16, 16 n.8 (citing to a NordicTrack (an iFIT entity) warranty that includes repair or replacement).[52] Also relevant to

---

harm to consumers is entirely speculative."); *Certain Optoelectronic Devices for Fiber Optic Communications, Components Thereof, & Prods. Containing the Same*, Inv. No. 337-TA-860, Comm'n Op. at 32–33 (May 9, 2014) (denying request for exemption due to lack of evidence of specific harm to respondent's customers after "acknowledg[ing] the concerns raised by Respondents that there exists the possibility that one or more customers may potentially" be disadvantaged). Indeed, Remaining Respondents indicated in their submission of December 2, 2022, that they are working on a redesign that was anticipated to be operational within 120 days. *See* RBr. at 34–35. Moreover, as the Commission found above, there are several alternative products that are reasonable substitutes for the infringing fitness devices.

Inasmuch as Respondents retain discretion to provide consumers with any suitable non-infringing fitness device as a replacement for a defective fitness device under the warranties of record for the duration of the Commission's remedial orders, Commissioner Karpel finds the record does not show consumer harm to justify the replacement exemption. Since an adjudicated redesign is but one such option that Respondents may provide to consumers as a replacement, she therefore disagrees with the premise of footnote 52.

[52] As discussed *supra* at section V.A.1.c, Respondents have not identified or explained how certain components of covered articles are non-infringing. More significantly, no components or covered articles have been adjudicated as non-infringing. Because there are no redesign devices approved at this time, the majority observes that Commissioner Karpel's approach would mean Respondents cannot replace devices under warranty unless and until the Respondents adjudicate a redesigned product at CBP or the Commission as non-infringing.

DISH TECHNOLOGIES L.L.C. EXHIBIT 2007, Page 92
Aylo Freesites Ltd. v. Dish Technologies L.L.C.
IPR2024-00516

consumer expectations is the significant cost of the accused products. *See, e.g.*, RX-0096 (Peloton Bike Website) at 1 (offering the Peloton Bike for sale at $1,495). Corroborating the significant cost is that Peloton offers financing options for its bike. *See* RX-0077 (Peloton Financing). Further relevant is the complexity of the Accused Products and the difficulty faced by consumers if they were forced to remove from their homes equipment that would no longer be useful if access to repair parts were not available. In view of the harm to U.S. consumers who have these reasonable expectations that their substantial investment in an infringing device would not be lost due to an inability to obtain parts needed for service or repair, the Commission includes in the issued remedial orders an exemption for the provision of parts for service and repair of infringing articles purchased by consumers prior to the date of the remedial orders. This exemption applies to components regardless of whether the infringing device is subject to warranty. The Commission additionally includes an exemption to replace infringing articles as a whole (*e.g.*, a Peloton Bike) while those articles are under warranty to the extent provided by the warranty. This exemption does not extend to replace whole articles that are not under warranty.[53] Allowing for replacement under warranty, but not after the end of the warranty term, is consistent with the reasonable expectations of consumers. On the other hand, permitting replacement after the termination of a warranty would essentially allow consumers to purchase a new infringing article. At least for these reasons, the Commission has determined to

---

[53] Commissioner Schmidtlein would extend the exemption for replacement of the whole article in this case to include those that are not currently under warranty. She agrees with the majority that the reasonable expectations of consumers include replacement of the infringing component (the integrated video display) if needed when not under warranty. In her view, as such, those expectations would also include replacement of the whole article when not under warranty if for some reason it was not possible to just replace the infringing component (*e.g.*, if the malfunctioning video display could not be removed or reattached to the fitness equipment for some reason).

DISH TECHNOLOGIES L.L.C. EXHIBIT 2007, Page 93
Aylo Freesites Ltd. v. Dish Technologies L.L.C.
IPR2024-00516

provide exemptions to the remedial orders for parts necessary to service and repair infringing articles and, if provided for under warranty, for replacement of infringing articles, to reduce the orders' impact on U.S. consumers. These exemptions permit the importation and sale of components needed for service and repair, or if required by warranty, replacement, of infringing fitness devices, and mitigates harm to U.S. consumers who have made substantial investments in those devices which would be lost—through no fault of their own—were they not able to access components and replacement devices needed for service and repair.

With these exemptions in place, the Commission's remedy will not adversely affect United States consumers to the extent that rises to a public interest concern for the remedial orders. As discussed in more detail above, consumers have alternatives to the infringing products. *See, e.g.*, *Certain Personal Data & Mobile Communications Devices & Related Software*, Inv. No. 337-TA-710, Comm'n Op. at 69 (Dec. 29, 2011) ("[T]he mere constriction of choice cannot be a sufficient basis for denying the issuance of an exclusion order.").

C. Bonding

If the Commission enters an exclusion order or a CDO, a respondent may continue to import and sell its products during the 60-day period of Presidential review under a bond in an amount determined by the Commission to be "sufficient to protect the complainant from any injury." 19 U.S.C. § 1337(j)(3); *see also* 19 C.F.R. § 210.50(a)(3). When reliable price information is available in the record, the Commission has often set the bond in an amount that would eliminate the price differential between the domestic product and the imported, infringing product. *See Microsphere Adhesives*, Comm'n Op. at 24. The Commission also has used a reasonable royalty rate to set the bond amount where a reasonable royalty rate could be ascertained from the evidence in the record. *See, e.g.*, *Certain Audio Digital-to-Analog Converters & Prods. Containing Same*, Inv. No. 337-TA-499, Comm'n Op. at 25 (Mar. 3,

DISH TECHNOLOGIES L.L.C. EXHIBIT 2007, Page 94
Aylo Freesites Ltd. v. Dish Technologies L.L.C.
IPR2024-00516

2005). Where the record establishes that the calculation of a price differential is impractical or there is insufficient evidence in the record to determine a reasonable royalty, the Commission has imposed a one hundred percent (100%) bond. *See, e.g.*, *Certain Liquid Crystal Display Modules, Prods. Containing Same, & Methods Using the Same*, Inv. No. 337-TA-634, Comm'n Op. at 6–7 (Nov. 24, 2009). The complainant, however, bears the burden of establishing the need for a bond. *Certain Rubber Antidegradants, Components Thereof & Prods. Containing Same*, Inv. No. 337-TA-533, USITC Pub. No. 3975, Comm'n Op. at 40 (July 21, 2006).

Before the CALJ, DISH requested a one hundred percent (100%) bond. *See, e.g.*, RD at 260–61. The RD recommended that no bond issue, reasoning that "DISH's Pre-Hearing brief did not contain any analysis as to how it allegedly suffered an injury that warrants a bond." RD at 261.

DISH's briefing before the Commission does not request a bond. Because DISH does not request bond, the Commission has determined to set a bond in the amount of zero percent (0%) of the entered value of the covered products (*i.e.*, no bond) during the period of Presidential Review.

VI. CONCLUSION

In sum, the Commission finds a violation of section 337 by the Remaining Respondents as to the asserted claims of the '156, '554, and '555 patents, but not as to the asserted claims of the '564 patent. As a remedy, the Commission has determined to issue an LEO and CDOs to the Remaining Respondents. The Commission also finds that the public interest factors do not preclude the issuance of this remedy. The Commission has further determined to set a bond in the amount of zero percent (0%) of the entered value of the covered products (*i.e.*, no bond) during the period of Presidential Review. The Commission has additionally determined to grant a joint motion to terminate the investigation as to MIRROR.

DISH TECHNOLOGIES L.L.C. EXHIBIT 2007, Page 95
Aylo Freesites Ltd. v. Dish Technologies L.L.C.
IPR2024-00516

By order of the Commission.

Lisa R. Barton
Secretary to the Commission

Issued: March 23, 2023

DISH TECHNOLOGIES L.L.C. EXHIBIT 2007, Page 96
Aylo Freesites Ltd. v. Dish Technologies L.L.C.
IPR2024-00516