UNITED STATES PATENT AND TRADEMARK OFFICE

BEFORE THE PATENT TRIAL AND APPEAL BOARD

AYLO FREESITES LTD,
PETITIONER,

V.

DISH TECHNOLOGIES L.L.C.,
PATENT OWNER.

IPR2024-00517

U.S. PATENT NO. 11,677,798

PATENT OWNER'S PRELIMINARY RESPONSE

TABLE OF CONTENTS

Page

I. INTRODUCTION 1

II. LEVEL OF ORDINARY SKILL 1

III. CLAIM CONSTRUCTION 1

IV. THE BOARD SHOULD EXERCISE ITS DISCRETION TO DENY INSTITUTION UNDER 35 U.S.C. § 314(a) 2

A. Factor 1: Aylo is the same petitioner addressing substantially the same claims analyzed in the First Aylo Petition 3

B. Factor 2: Aylo should have been able to readily identify the Leaning reference when it filed the First Aylo Petition 6

C. Factor 3: the timing of Aylo's staggered petition filing creates unfairness, inefficiency, and potential for abuse 9

D. Factors 4 and 5: Aylo provides no adequate explanation for the over three-month delay in filing its serial petition 11

E. Factors 6 and 7: Institution of Aylo's serial Petition would result in a significant waste of the Board's resources and prejudice DISH 14

V. THE BOARD SHOULD DENY INSTITUTION UNDER 35 U.S.C. § 325(d) 16

A. The Examiner Considered the Same or Substantially the Same Art During Prosecution (Becton, Dickinson Factors (a), (b), and (d)) 18

B. Aylo Does Not Show that the Office Materially Erred in Evaluating the Prior Art 21

VI. THE BOARD SHOULD EXERCISE ITS DISCRETION TO DENY THE PETITION BECAUSE AYLO FAILS TO ADEQUATELY ADDRESS THE OBJECTIVE INDICIA OF NON-OBVIOUSNESS 23

VII. CONCLUSION 26

PATENT OWNER'S EXHIBIT LIST

Ex. No.	Description of Documents
2001	U.S. Patent App. Pub. No. 2004/0030547 by Leaning et al. ("Leaning US")
2002	Redline Comparison of Leaning and Leaning US
2003	*DISH Techs. L.L.C., et al. v. MG Premium LTD., et al.*, CA No. 2:23-cv-552, Dkt. No. 1, Complaint (Aug. 22, 2023 D. Utah)
2004	*MG Freesites LTD. v. DISH Techs., et al.*, CA No. 3:23-cv-03674, Disclosure of Asserted Claims and Infringement Contentions
2005	Information Disclosure Statement entered in prosecution of U.S. Patent App. No. 18/069,450
2006	Notice of Allowance entered in prosecution of U.S. Patent App. No. 18/069,450
2007	337-TA-1265 ITC Investigation Commission Opinion
2008	*Aylo Freesites Ltd. v. DISH Technologies L.L.C.*, IPR2024-00043, Paper 1 (P.T.A.B. Oct. 13, 2024)

I. INTRODUCTION

Petitioner has already filed an IPR Petition challenging most of the claims of the same patent at issue here—the '798 Patent (EX2008 (*Aylo Freesites Ltd. v. DISH Technologies L.L.C.*, IPR2024-00043, Paper 1 (P.T.A.B. Oct. 13, 2024)) (hereinafter the "First Aylo Petition")))—and provides no reasonable justification for harassing Patent Owner with a second Petition, much less for doing so after receiving Patent Owner's Preliminary Response to the First Aylo Petition. As explained below, all of the *General Plastics* factors weigh against institution of this follow-on petition. *General Plastic Indus. Co., Ltd. v. Canon k.k.*, IPR2016-01357, Paper 19 (P.T.A.B. Sept. 6, 2017) (precedential as to § II.B.4.i). Accordingly, the Board should exercise its discretion to deny this Petition.

II. LEVEL OF ORDINARY SKILL

While DISH disputes Petitioner's definition of the level of a person of ordinary skill in the art ("POSITA"), resolution of such dispute is not necessary for the Board to determine whether to grant institution. DISH reserves the right to further address Petitioner's improper POSITA definition in subsequent filings, if necessary.

III. CLAIM CONSTRUCTION

The '798 Patent's challenged claims are to be construed "using the same claim construction standard that would be used to construe the claim in a civil action under 35 U.S.C. § 282(b)." 37 C.F.R. § 42.100(b) (Nov. 13, 2018). The Petition does not

seek construction of any terms in the '798 Patent. For purposes of this filing, DISH does not propose that the Board construe any claims, but DISH reserves the right to do so in subsequent filings, if necessary.

IV. THE BOARD SHOULD EXERCISE ITS DISCRETION TO DENY INSTITUTION UNDER 35 U.S.C. § 314(a)

The precedential *General Plastic* decision established a list of seven non-exhaustive factors that are designed to prevent the precise "potential for abuse" presented by Aylo's delay in filing this serial Petition after the filing of the First Aylo Petition. *General Plastic* at 17. Aylo waited more than three and a half months between filing the First Aylo Petition and filing this serial petition. Institution of this Petition would reward the exact "opportunity to strategically stage their prior art and arguments in multiple petitions" at issue in *General Plastic* by allowing Aylo to use DISH's submissions in response to the First Aylo Petition, as well as future submissions from DISH in the earlier IPR, which was already instituted, "as a roadmap." *Id.* at 17-18. Institution of this serial petition would thus be "unfair to patent owner[]" and "an inefficient use of the *inter partes* review process." *Id.* This is precisely the type of gamesmanship that the *General Plastic* framework is intended to prevent. Further, although Aylo asserts that claims 10, 20, and 25 "were not challenged in the Ogdon-based IPR" (Pet. at 61), this assertion ignores the fact that claims 10, 20, and 25 depend from claims 1, 9, 11-12, and 22, which were challenged in the First Aylo Petition. *See* First Aylo Petition at 15-24, 36-46, and

54-55. Additionally, as discussed below, mere addition of dependent claims in a follow-on petition is not a basis to avoid discretionary denial under *General Plastic*.

As explained in more detail below, all seven *General Plastic* factors weigh against institution of Aylo's serial petition. Thus, the Board should exercise its authority to discretionarily deny this serial petition to prevent serious unfairness, inefficiencies, and potential for abuse leading to inconsistent outcomes.

A. Factor 1: Aylo is the same petitioner addressing substantially the same claims analyzed in the First Aylo Petition

There is no dispute that Aylo is "the same petitioner" that previously filed a petition directed toward the '798 Patent, which is the same patent at issue here. Yet Aylo argues that *General Plastic* factor 1 "favors institution or is at least neutral" because this serial Petition "additionally challenges claims 10, 20, and 25—which were not challenged in the Ogdon-based IPR." Pet. at 61. But Aylo is incorrect, and the Board has repeatedly rejected similar arguments. As one panel noted: "the *General Plastic* framework is applicable to this situation" where "a second petition challeng[es] different claims of the same patent." *ByteDance Ltd. v. Triller, Inc.*, IPR2021-00774, Paper 6 at 9 (P.T.A.B. Oct. 12, 2021). This is particularly true when the second Petition was filed after the patent owner filed its preliminary response in the first IPR and "there are significant overlaps in claimed subject matter." *Id.* The instant case presents a similar delay between filing of the serial

petitions and the same significant overlap in claimed subject matter and issues addressed as in *ByteDance*.

Aylo elected to file its First Aylo Petition more than 10 months before the statutory deadline. Aylo filed that petition on October 13, 2023, despite knowing that DISH would serve its infringement contentions in the parallel litigation, which identify the asserted claims, on November 21, 2023. In those contentions, DISH additionally alleged infringement of claims 10 and 25. EX2004, 2. Claim 20, although not raised in DISH's infringement contentions, includes limitations similar to those found in Claims 6 and 25. Had Aylo waited a little over a month to receive DISH's contentions before filing the First Aylo Petition, it would have known that it should have included claims 10 and 25 in the First Aylo Petition. Thus, Aylo's choice to challenge claims 10, 20, and 25 in the instant Petition was purely based on Aylo's own lack of diligence and not the actions of DISH.

Aylo's two Petitions address the exact same claimed subject matter across 25 challenged claims. Claims 10, 20, and 25, the only nonoverlapping claims between the two petitions, depend from claims 1, 9, 11-12, and 22, which were challenged in the First Aylo Petition. *See* First Aylo Petition at 15-24, 36-46, and 54-55. In the instant Petition, Aylo devotes less than two pages of text to addressing claims 10, 20, and 25. Pet., at 52-53, 55, 57-58. Thus, as the Board previously recognized, where the claimed subject matter largely overlaps, such as here, "although different claims are involved, many of the issues addressed in the [first] IPR would be present

in the instant proceeding," weighing in favor of the Board exercising discretionary denial. *Fujifilm Corp. v. Sony Corp.*, IPR2018-00060, Paper 8 at 8-9 (P.T.A.B. Apr. 19, 2018); *see also Longi Green Energy Tech. Co. v. Hanwha Solutions Corp.*, IPR2020-00047, Paper 18 at 8-15 (P.T.A.B. Apr. 27, 2020) (applying discretionary denial based on *General Plastic* to a second Petition filed only six weeks after the first petition with no overlapping claims but largely overlapping claimed subject matter).

In assessing Factor 1, the Board previously found that as little as a single overlapping claim challenged in two serial petitions with "minimal overlap" may weigh "in favor of invoking our discretion to deny institution of a second petition" where, as here, the same Petitioner filed both petitions. *Club Champion LLC v. True Spec Golf LLC*, IPR2019-01569, Paper 9 at 6, 9 (P.T.A.B. Mar. 17, 2020); *see also Metall Zug Ag v. Carl Zeiss Meditec AG*, IPR2020-01074, Paper 8 at 5-6 (P.T.A.B. Jan. 5, 2021) (applying discretionary denial to serial petitions with only a "relatively minimal degree of overlap"). Here, although Aylo's serial Petition challenges claims 10, 20, and 25, their dependence from claims 1, 9, 11-12, and 22 along with the overlapping analysis of the remaining 22 claims in the two Petitions presents the exact scenario that *General Plastic* was concerned with—i.e., abusive behavior by Petitioners. The reasoning in *Club Champion* that even one overlapping claim causes Factor 1 to favor discretionary denial where the same Petitioner filed both petitions is instructive here due to the overlap in the issues presented in the two

Petitions regarding claims 1, 9, 11-12, and 22 as well as 17 additional claims: 2-8, 13-19, 21, 23, and 24.

For at least these reasons, Factor 1 weighs strongly against institution.

B. Factor 2: Aylo should have been able to readily identify the Leaning reference when it filed the First Aylo Petition

As the Board notes in *General Plastic*, the relevant issue under Factor 2 "is whether the prior art references relied on in the follow-on petitions…could have been found with reasonable diligence." *General Plastic* at 20. Just as in *General Plastic,* Institution should be denied here because the petitioner left the record "devoid of any explanation why Petitioner could not have found the newly asserted prior art in any earlier search(es) through the exercise of reasonable diligence." *Id.*

For the Leaning reference, Aylo asserts that it "has been diligent in searching for prior art" and was only able to find Leaning a few weeks before filing this Petition. Pet. at 61. This argument does not withstand scrutiny for numerous reasons. As an initial matter, the '798 Patent lists on its face U.S. Patent App. Pub. No. 2004/0030547 ("Leaning US"), which includes disclosure that is virtually identical to the Leaning reference that Aylo was, purportedly, unable to find despite its earlier "diligent" searching. EX1001 at [56]; EX2001 (Leaning US). In fact, every citation to Leaning relied upon by Petitioner has equivalent, and in most cases identical, corresponding disclosure in Leaning US. *See, e.g.*, Appendix 1, Appendix 2.

As explained below, the overlap in disclosures between Leaning and Leaning US justifies denial under 325(d). *See infra* § V. However, the similarity in these references is also relevant to show that Aylo's initial searching was not and could not have been diligent. Leaning is not difficult to find. It is an international patent application published on June 20, 2002 and available through the World Intellectual Property Organization's own searchable archive as well as numerous other searchable patent databases. *See generally* EX1004. Even a cursory review of the '798 Patent would have led to a skilled searcher to discover Leaning because:

1. Leaning US and Leaning share the same two inventors;
2. Leaning US and Leaning have the same applicant/assignee, British Telecommunications Public Limited Company;
3. Leaning US and Leaning claim priority to the same filing date; and
4. Leaning US and Leaning ***share virtually identical specifications including identical figures***, as discussed in more detail below.

See EX2001 (Leaning US); EX2002 (Leaning Redline).

Aylo provides no explanation of what steps it took prior to filing the First Aylo Petition to locate prior art, and no explanation of why those steps were "diligent" yet unable to uncover Leaning. For instance, Aylo fails to submit a declaration or other factual evidence, that would support the attorney argument that Aylo was unaware of Leaning prior to filing the First Petition. Moreover, despite asserting that it "has been diligent in searching for prior art," Petitioner fails to allege, much less prove, that it could not have uncovered Leaning through a

reasonably diligent search prior to filing the First Aylo Petition. Pet. at 61. Petitioner fails to provide any explanation of its search methodology prior to filing the First Aylo Petition (e.g., date searches conducted, search terms, databases searched, etc.) nor does Petitioner explain how or when it changed its search methodology that led to the discovery of Leaning. Thus, Petitioner has failed to provide any justifiable basis for the Board to conclude that Petitioner was reasonably diligent in searching for prior art before the filing of the First Aylo Petition.

Moreover, Aylo has not identified any changed circumstances that justified its new prior art search. As noted above, the First Aylo Petition was filed early in the statutory time period. To the extent a prior art search was ongoing at the time of filing of the First Aylo Petition, Petitioner gives no explanation as to why petitioning for *inter partes* review could not have waited until that search was complete. Petitioner's desire to rush the filing of the First Aylo Petition for its own unique reasons cannot justify burdening Patent Owner and the Board with a serial petition.

Further, Aylo's only evidence that it was "diligent" in its prior art search was that others had not already found Leaning. *See id.* at 61-62 ("Despite Leaning's strength as an invalidating reference, it was not discovered or relied upon by any USPTO examiners, the respondents at the ITC, or prior targets of DISH's district court assertions of related patents to the '798 Patent."). That no one else previously relied on Leaning in an attempt to invalidate the claims of the '798 Patent fails to

explain why Aylo should not have been aware of the reference before filing the First Aylo Petition.

In sum, because Aylo provides no reasonable justification for why Leaning could not have been identified at the time of filing of the First Aylo Petition, Factor 2 weighs decisively against institution.

C. Factor 3: the timing of Aylo's staggered petition filing creates unfairness, inefficiency, and potential for abuse

Under the third *General Plastic* factor, the Board considers the extent to which a petitioner had the opportunity to "tailor its arguments to address issues identified by the patent owner and/or the Board during a prior proceeding." *NetApp v. Realtime Data*, IPR2017-01354 at 11 (P.T.A.B. Nov. 14, 2017) (Paper 16). Aylo filed the instant Petition over three months after filing the First Aylo Petition and well after receiving the POPR in the First Aylo Petition, which details, in depth, the technical deficiencies with the grounds asserted therein. Worse yet, Aylo admits that it knew of the Leaning reference on January 5, 2024, well before DISH filed its POPR on January 18, 2024 responding to the First Aylo Petition.

At the time of filing of the instant Petition, Aylo had ample opportunity to study six POPRs that respond to the First Aylo Petition and five other Aylo petitions filed against related patents. *See Aylo Freesites Ltd. v. DISH Techs. L.L.C.*, IPR2024-0043 ('798 Patent) at Paper 6 (January 18, 2024); IPR2024-0004 ('138 Patent) at Paper 6 (January 18, 2024); IPR2024-00045 ('554 Patent) at Paper 6

(January 18, 2024); IPR2024-00046 ('680 Patent) at Paper 6 (January 18, 2024); IPR2024-00047 ('564 Patent) at Paper 6 (January 18, 2024); IPR2024-00048 ('772 Patent) at Paper 6 (January 18, 2024); IPR2024-00146 ('555 Patent) at Paper 7 (February 16, 2024); IPR2024-00147 ('156 Patent) at Paper 7 (February 16, 2024). Thus, Aylo reviewed those filings and had the opportunity to use them as a roadmap to correct flaws and fill gaps DISH identified in its preliminary responses to the First Aylo Petition. Moreover, the instant Petition creates unfairness to DISH and the potential for abuse in the related District Court action. For example, in the event this petition is denied, Petitioner could use any arguments on the merits that DISH now makes in its preliminary response to unfairly and improperly obtain advance notice of DISH's likely arguments in the related District Court action.[1]

As the Board recognized in *General Plastic*, the use of "multiple, staggered petitions challenging the same patent and same claims" creates "the potential for abuse," allows later petitioners to use prior proceedings "as a roadmap," and is

---

[1] Because of this potential for abuse, Patent Owner does not address the substantive deficiencies in the grounds of the instant Petition in this Preliminary Response. This should not in any way be construed as a statement on the merits of the grounds in the petition. For the avoidance of doubt, Patent Owner notes that there are many deficiencies in the Petition's grounds and the rationale underpinning those grounds.

"unfair to patent owners." *General Plastic* at 17-18. That is exactly what Petitioner has done here, and for at least these reasons, Factor 3 also weighs strongly against institution.

D. Factors 4 and 5: Aylo provides no adequate explanation for the over three-month delay in filing its serial petition

Aylo waited over three months after filing the First Aylo Petition on October 13, 2023 before filing this serial Petition on January 30, 2024. As discussed above, this delay gave Aylo the unfair advantage of analyzing the POPR to the First Aylo Petition, as well as POPRs to five related IPR petitions. *See Aylo Freesites Ltd. v. DISH Techs. L.L.C.*, IPR2024-0043 ('798 Patent) at Paper 6 (January 18, 2024); IPR2024-0004 ('138 Patent) at Paper 6 (January 18, 2024); IPR2024-00045 ('554 Patent) at Paper 6 (January 18, 2024); IPR2024-00046 ('680 Patent) at Paper 6 (January 18, 2024); IPR2024-00047 ('564 Patent) at Paper 6 (January 18, 2024); IPR2024-00048 ('772 Patent) at Paper 6 (January 18, 2024); IPR2024-00146 ('555 Patent) at Paper 7 (February 16, 2024); IPR2024-00147 ('156 Patent) at Paper 7 (February 16, 2024). Aylo attempts to justify this unfair advantage by arguing that "in the instant petition, Petitioner additionally challenges claims 10, 20, and 25—which were not challenged in the Ogdon-based IPR" and it allegedly did not find the Leaning reference until after filing its first petition. Pet. at 61-62. These bare bones, unsupported conclusory assertions, however, do not excuse the nearly four-month delay in filing this serial petition.

First, Aylo challenged all but 3 out of the 25 claims of the '798 Patent in the First Aylo Petition. First Aylo Petition at 3. At that time, only claim 1 was expressly identified for infringement. *See* EX2003 (Utah Complaint). That Aylo challenged numerous unasserted claims in the First Aylo Petition demonstrates that it knew of the possibility of additional claims being asserted. Aylo specifically chose which unasserted claims of the '798 Patent to challenge in the First Aylo Petition.

Second, two of the three additional claims challenged in the present Petition, claims 10 and 25, were expressly identified in DISH's infringement contentions served on November 21, 2023. *See* EX2004 (Infringement Contentions), 2. Other than the alleged inability to find Leaning, Aylo provides no additional explanation for the two months of additional delay between the assertion of claims 10 and 25 and the filing of this second Petition on January 30, 2024. That claims 10 and 25 were added to the district court proceeding a month after the First Petition does not justify Aylo's additional delay in filing this serial Petition. Aylo could have immediately filed additional petitions challenging those claims without the Leaning reference, and before analyzing the POPRs to Aylo's first wave of petitions.

Third, as discussed with respect to Factor 2, before filing the First Aylo Petition, Aylo should have known about the Leaning reference. Aylo was well-aware of the *General Plastic* factors when filing the First Aylo Petition (First Aylo Petition at 63-64) and the instant Petition (Pet. at 61-64). Thus, the onus to specify when the additional references were first identified and adequately account for the

delay in filing the second Petition after identification of these references was on Aylo.

In scenarios where, as here, the petitioner knew of some of the relied upon references at the time of filing the first petition and fails to adequately account for the delay in locating the additional relied upon references, Factors 4 and 5 favor discretionary denial, especially given the delay in the present case. *ByteDance*, IPR2021-00774, Paper 6 at 13 (finding that a "five-month delay" was not justified under a similar fact pattern).

Furthermore, because the evidence shows that a skilled searcher would have found Leaning after conducting a diligent search, Aylo has no justification for its significant delay in filing the instant Petition. *Longi Green*, IPR2020-0047, Paper 18 at 10-12 (finding Factors 4 and 5 favor discretionary denial based on a "four-month delay" between petitions challenging non-overlapping claims where the petitioner did not provide any rationale as to why it could not have identified the additional references earlier); *General Plastic* at 10-11 (Factors 4 and 5 favor discretionary denial when the petitioner "provide[s] no explanation why it could not have found this new prior art earlier—prior to filing the first-filed petitions—through the exercise of reasonable diligence."). Additionally, when, as here, there is a significant delay between serial petitions and the petitioner fails to "explain[] why all of its challenges could not have been raised in a single petition," Factor 5 weighs in favor of discretionary denial. *Club Champion*, IPR2019-01569, Paper 9 at 11.

Aylo's nearly four-month delay in filing this serial Petition also raises additional fairness concerns. For example, the First Aylo Petition is already instituted and ongoing. Aylo and its expert will likely have access to the Patent Owner's Response and the Board's Institution Decision from that IPR when preparing its expert for depositions in this IPR. Aylo's expert would therefore have an unfair, inside look into DISH's arguments and the Board's reception of those arguments. Additionally, Aylo would have the unfair advantage of having had months to study and develop responses to DISH's oral hearing arguments from the first IPR when preparing for the oral argument in the second IPR. These additional fairness concerns further indicate that Aylo's nearly four-month delay favors discretionary denial.

For at least these reasons, Factors 4 and 5 weigh strongly against institution.

E. Factors 6 and 7: Institution of Aylo's serial Petition would result in a significant waste of the Board's resources and prejudice DISH

The Board has already instituted the First Aylo Petition. As the Board has previously observed, "the most efficient way to manage the two *inter partes* reviews would be to coordinate or consolidate the proceedings and adopt a common schedule." *ByteDance*, IPR2021-00774, Paper 6 at 13. However, due to the more than three-month delay on the part of Aylo, "it is no longer feasible for the Board to adjust due dates to coordinate the proceedings while still meeting the statutory mandate to issue a final written decision" on the First Aylo Petition within a year of

institution in that proceeding. *Id.* at 13-14. Therefore, Factors 6 and 7 strongly favor discretionary denial where, as here, the staggered timing of multiple petitions from the same petitioner "would require the Board to conduct an entirely separate proceeding involving numerous issues that likely will already have been considered and resolved in the" earlier proceeding. *Club Champion*, IPR2019-01569, Paper 9 at 10-11; *see also ByteDance*, IPR2021-00774, Paper 6 at 13-14 ("instituting a second *inter partes* review would require an entirely separate proceeding involving numerous issues that likely will already have been considered and resolved in the [earlier] IPR.").

Furthermore, although the two staggered proceedings would be addressing many of the same issues, the Board would be addressing these overlapping issues based on two "different evidentiary records." *Club Champion*, IPR2019-01569, Paper 9 at 10-11. As the Board has previously found, "[m]oving forward with two separate proceedings involving overlapping issues, but having different evidentiary records and schedules, would result in a significant waste of the Board's resources. Instituting a second *inter partes* review also would prejudice Patent Owner, which would be forced to re-brief and reargue many of the same issues that it will argue and brief during the course of the [earlier filed] IPR." *Id.*; *see also ByteDance*, IPR2021-00774, Paper 6 at 13-14 ("Moving forward with separate proceedings involving overlapping issues, but having different evidentiary records and schedules, would have a significant impact on the Board's resources."); *Longi Green*, IPR2020-

0047, Paper 18 at 12 (finding that a five-month delay between petitions addressing non-overlapping claims "weigh[s] in favor of invoking our discretion to deny institution" due to "a significant impact on the Board's resources" in addressing overlapping issues).

For at least these reasons, Factors 6 and 7 weigh strongly against institution. *General Plastic* at 21 (reasoning "multiple, staggered petition filings…are an inefficient use of the *inter partes* review process and the Board's resources").

V. THE BOARD SHOULD DENY INSTITUTION UNDER 35 U.S.C. § 325(d)

The Board should also decline institution under 35 U.S.C. § 325(d) because Leaning's disclosures are entirely cumulative of disclosures in the Leaning US reference already considered during the original examination. Aylo claims that Leaning "has relevant disclosures in the Abstract, specification, and published claims directed to subject matter such as a terminal for playing streaming audio or video from a remote server," but fails to provide any specific examples. Pet. at 64-65. Even if Aylo had made a reasonable attempt to carry its burden to show noncumulativeness, which it did not, Aylo could not have hoped to carry that burden. *See, e.g.*, *Ecofasten Solar, LLC v. Unirac, Inc.*, IPR2021-01379, 2022 WL 443369, at *16 (P.T.A.B. Feb. 8, 2022) ("Petitioner does not present any evidence or argument to persuade us that [the petition's references] are not the same or substantially the same as the prior art raised during the original prosecution or

reexamination. Petitioner has the burden of proof to establish that it is entitled to the relief requested."). Indeed, the '798 Patent lists on its face Leaning US, which includes identical disclosure of the "terminal for playing streaming audio or video from a remote server." *See generally* EX2001 (Leaning US).

Section 325(d) provides that the Board may elect not to institute trial if "the same or substantially the same prior art or arguments previously were presented to the Office." The Board applies a two-part framework: "(1) whether the same or substantially the same art previously was presented to the Office"; and, if so, (2) "whether the petitioner has demonstrated that the Office erred in a manner material to the patentability of challenged claims." *Advanced Bionics, LLC v. MED-EL Elektromedizinische Geräte GmbH*, IPR2019-01469, 2020 WL 740292, at *3 (P.T.A.B. Feb. 13, 2020) (precedential). "Previously presented art includes … art provided to the Office by an applicant, such as on an Information Disclosure Statement (IDS), in the prosecution history of the challenged patent." *Id.*; *see also Biocon Pharma Ltd. v. Novartis Pharms. Corp.*, IPR2020-01263, 2021 WL 608300, at *3-4 (P.T.A.B. Feb. 16, 2021) (denying institution based on art previously presented in an IDS).

The Petition fails to sufficiently address that its primary reference, Leaning, is cumulative of the nearly identical disclosure already before the Examiner and fails to identify any material error by the PTO during the original examination. Under

such circumstances, "the Director generally will exercise discretion not to institute *inter partes* review." *Advanced Bionics*, 2020 WL 740292, at *3.

A. The Examiner Considered the Same or Substantially the Same Art During Prosecution (*Becton, Dickinson* Factors (a), (b), and (d))

Aylo's grounds in its serial Petition rely on Leaning as the primary reference—a prior art references already considered by the Office. Leaning US was already at issue in the original examination of the '798 Patent and, accordingly, was cited on the face of the '798 Patent. Leaning US was filed by the same two inventors as Leaning and shares a virtually identical specification with Leaning (and therefore renders the Leaning reference cumulative). *See* EX2001 (Leaning US); EX2002 (Leaning Redline); EX1001 at [56]. As reflected in a "List of References Cited by Applicant and Considered by Examiner" dated January 5, 2023, the Examiner considered Leaning US (i.e., U.S. Patent App. Pub. No. 2004/0030547 by Leaning et al.) during the original examination. EX1002 at 232 (showing Leaning US not lined through and stating, with examiner's initials, "ALL REFERENCES CONSIDERED EXCEPT WHERE LINED THROUGH"). A redline comparison of Leaning and Leaning US shows that the specifications are virtually identical. EX2002. Indeed, every one of Petitioner's citations to Leaning has a corresponding passage in Leaning US that is identical in substance, and in most cases, appears verbatim in Leaning US. As set forth in Appendix 1, Aylo's invalidity grounds repeatedly cite portions of Leaning (EX1004) that are identical to passages in

Leaning US (EX2001). Further, all of Aylo's remaining citations to Leaning (EX1004) are to Leaning's abstract and first-page introduction. As set forth in Appendix 2, Leaning's abstract and introduction are substantially the same as passages in Leaning US (EX2001).

Thus, Aylo cannot dispute that prior art teachings that it relies upon were considered during prosecution of the '798 Patent. Notably, Aylo concedes that Leaning US "was listed in an IDS during prosecution of the '798 Patent." Pet. at 65. This demonstrates that the first prong of the *Advanced Bionics* framework is met. *Advanced Bionics*, IPR2019-01469, Paper 6 at 7-8; *see also Google LLC v. Valtrus Innovations Ltd.*, IPR2022-01197, Paper 18 at 15-16 (P.T.A.B. June 13, 2023) (stating, on remand after Director review, "[o]ur precedent holds that providing a document to the Office in an Information Disclosure Statement is sufficient to satisfy prong one of the *Advanced Bionics* analysis as long as that 'previously presented' art is 'the same or substantially the same' as that presented in the Petition").

Aylo contends that the Examiner's consideration of Leaning US should be ignored because "other than the Examiner generally stamping that every reference in the IDS was considered (EX1002, 627), there is no evidence that the Examiner actually considered the disclosures of US2004/0030547; it was never used in a rejection and never addressed in the prosecution history of the '798 Patent or any related patents." Pet. at 65. Petitioner's speculation contradicts the Board's precedential ruling in *Advanced Bionics*, which makes clear that "***[p]reviously***

presented art includes art made of record by the Examiner, and art ***provided*** to the Office by an applicant, such as ***on an Information Disclosure Statement (IDS),*** in the prosecution history of the challenged patent." *Advanced Bionics*, IPR2019-01469, Paper 6 at 7-8; *see also Medtronic CoreValve LLC v. Speyside Med., LLC*, IPR2021-00241, Paper 9 at 23 (P.T.A.B. Jul. 23, 2021) (denying institution where references were included on IDSs but not expressly included in a rejection by the Examiner).

Indeed, the Director has recently confirmed that "the first part of the *Advanced Bionics* framework does not require that an Examiner provide a 'discussion, analysis, or other findings on the applicability' of the relevant material contained in an IDS." *Keysight Techs., Inc. v. Centripetal Networks, Inc.*, IPR2022-01421, Paper 14 at 5 (P.T.A.B. Aug. 24, 2023); *see also Google LLC*, IPR2022-01197, Paper 18 at 15-16.

Any suggestion that the Examiner's consideration of cited prior art references was not robust or substantive is unfounded and contrary to the well-established principle that Examiners are "presumed to have done their job." *Brooktree Corp. v. Advanced Micro Devices, Inc.*, 977 F.2d 1555, 1574 (Fed. Cir. 1992); *see also Genzyme Corp. v. Transkaryotic Therapies, Inc.*, 346 F.3d 1094, 1103 n.3 (Fed. Cir. 2003) ("Therefore, without record support, an argument alleging dereliction of duty by a patent examiner is without merit."). Accordingly, Petitioner's assertion that

references that are merely cited in an IDS and "generally stamp[ed]" as being considered does not satisfy the first prong of *Advanced Bionics* is incorrect.

Additionally, DISH recently submitted an IDS after allowance in U.S. Patent App. No. 18/069,450—a child of the '798 Patent containing claims containing limitations with similar subject matter challenged here. *See* EX2005 (450 IDS). The IDS included the Leaning reference as well as copies of the instant Petition. *Id.* at 2-3. The Examiner considered those documents as indicated by initialing the IDS and noting "ALL REFERENCES CONSIDERED EXCEPT WHERE LINED THROUGH." *Id*. Thus, the Examiner faced with the new, cumulative Leaning reference and Aylo's analysis of that reference, found no reason to reject the child application's claims and instead entered a new notice of allowance. EX2006 (450 NOA).

For these reasons, the first prong of the *Advanced Bionics* framework is met.

B. Aylo Does Not Show that the Office Materially Erred in Evaluating the Prior Art

Aylo also fails to meet its burden to show that "the Office erred in a manner material to the patentability of challenged claims." *Advanced Bionics*, 2020 WL 740292, at *3. As the Board explained in *Advanced Bionics*, "[i]f a condition in the first part of the framework is satisfied and the petitioner fails to make a showing of material error, the Director generally will exercise discretion not to institute *inter partes* review." *Id.*; *see also Ocado Group PLC v. AutoStore Tech. AS*, IPR2021-

00412, 2021 WL 3116836, at *19 (P.T.A.B. July 21, 2021) ("[N]either Petitioner nor [its expert] present any argument or persuasive evidence that there was any material error by the Office. This is a required element of Petitioner's burden to overcome our exercise of discretionary denial under Section 325(d)."). Here, it is undisputed that Leaning US was considered by the Examiner during the original examination. *See* Pet. at 65. Yet Aylo fails to compare or contrast the teachings of Leaning US with those of Leaning or any reference relied upon by the Examiner in rejecting the claims. Thus, Aylo has failed to carry its burden to show error by the Examiner.

Instead, Aylo urges the Board to reach a different conclusion on the same facts present before the Examiner, asserting only that Leaning US "was never used in a rejection and never addressed in the prosecution history of the '798 Patent or any related patents." *Id.* That assertion, which only goes to the first part of the *Advanced Bionics* test, is insufficient to meet Aylo's burden to show error. *See, e.g.*, *Xilinx*, 2021 WL 2385526, at *10 ("Petitioner does not provide any indication that the Examiner's prior art analysis in the prosecution history was error."). Moreover, the Board has rejected such assertions that failure to apply a reference in a rejection is sufficient to warrant declining to exercise discretionary denial under Section 325(d). *See, e.g.*, *Biocon*, 2021 WL 608300, at *4 (rejecting "Petitioner's contention that, even though [the reference] appears on an IDS, we should decline to exercise

discretion under § 325(d) because [the reference] was 'not applied by the Examiner'").

Because Aylo admittedly knew Leaning was already substantively considered by the Examiner, yet failed to demonstrate non-cumulativeness or material error by the Office, the Board should exercise its discretion to deny institution under Section 325(d).

VI. THE BOARD SHOULD EXERCISE ITS DISCRETION TO DENY THE PETITION BECAUSE AYLO FAILS TO ADEQUATELY ADDRESS THE OBJECTIVE INDICIA OF NON-OBVIOUSNESS

In analyzing whether discretionary denial is appropriate, the Board has repeatedly "cautioned petitioners…that petitions may be denied if they do not address known evidence of secondary considerations." *Stryker Corp. v. KFX Med., LLC,* IPR2019-00817 at *28-*29 (P.T.A.B. Sep. 16, 2019) (Paper 10) (denying petition based on discretionary denial factors, including objective indicia); *accord Robert Bosch Tool Corp. v. SD3 LLC*, IPR2016-01751 (P.T.A.B. Mar. 22, 2017) (Paper 15) (denying institution for failure to address objective indicia presented during an ITC proceeding); *Coalition for Affordable Drugs V LLC v. Hoffman–LaRoche, Inc.*, IPR2015–01792 (P.T.A.B. Mar. 11, 2016) (Paper 14) (denying institution for failure to address objective indicia presented during *ex parte* prosecution); *Merial Ltd. v. Virbac*, IPR2014–01279 (P.T.A.B. Jan. 22, 2015) (Paper 13) (same); *Omron Oilfield & Marine Inc. v. MD/TOTCO*, IPR2013–00265

(P.T.A.B. Oct. 31, 2013) (Paper 11) (denying institution for failure to address objective indicia raised during reexamination).

For instance, in *Stryker*, the Board explained that the petitioner was aware of prior litigation where evidence of secondary considerations had been successfully relied upon to establish non-obviousness. IPR2019-00817 (Paper 10) at 27-29. The Board specified that "the secondary considerations evidence presented during the [prior] litigation established that the [challenged claims] may not have been obvious." *Id.* at 28. Based on this, as well as the similarity between the art presented in the petition and art previously considered by the Office, the Board exercised its discretion to deny institution. *Id.* at 23, 29. The facts here are indistinguishable from *Stryker*. Just like *Stryker*, Aylo here relies on art that is at best cumulative of art that the PTO previously considered in detail. *See supra*. Additionally, just like *Stryker*, Aylo was aware of the prior litigation where objective indicia of non-obviousness were presented, yet Aylo failed to adequately address them. *Stryker*, IPR2019-00817 at *28 ("Despite knowing of the [prior] litigation, Petitioner did not address the secondary considerations evidence in its Petition.").

In particular, Aylo fails to adequately address the International Trade Commission's explicit findings that evidence of secondary considerations supported a finding of non-obviousness in a case of which Petitioner is aware. *See, e.g.*, Pet. at 9-11. The Final Initial Determination in that Investigation (as adopted in relevant part by the ITC in its written opinion) made the following findings:

> [Technology expert] Dr. Jeffay demonstrated through corroborating evidence that [initial patent-owner] Move's success is tied to the "unique characteristics of the claimed invention." As Dr. Jeffay testified, the Move system was described as early as 2008 as offering "a smooth end user experience as the Move Media Player up-shifts and down-shifts in response to network and client CPU availability." Moreover, the Move Media Player's encoding technique allowed streaming via HTTP, and the use of "[s]imple HTTP protocol transfer of media files from standard Web servers rather than deployment of expensive media servers' reduces cost and complexity." DISH further adduced evidence demonstrating that the Move Media Player was recognized as superior in streaming performance relative to its competitors, rebutting respondents' argument that "advancements in compression and encoding technologies," etc. account for the Move Media Player's success.
>
> In view of this record evidence, I [Chief ALJ] find DISH is entitled to a presumption that there is a nexus between the objective evidence of non-obvious DISH proffers and the claimed invention. I find respondents have not rebutted that presumption.
>
> … [analyzing evidence of objective indicia of nonobviousness]
>
> Having considered the claimed invention, the prior art, the objective indicia of non-obviousness, and the record as a whole, **I find that the objective indicia support a determination of non-obviousness. Thus, even if a hindsight combination of the prior art references identified by respondents would comprise every element of the claimed invention, I find that the objective evidence indicates a person of skill in the art at the time of the invention would not have found the invention to be obvious in view of those reference**s.

EX1009 (Final ID) at 213-17 (internal citations omitted, emphasis added). Specifically, the Chief ALJ found that DISH's objective indicia evidence had "demonstrated long-felt but unresolved need and failure of others," and that DISH had "adduced evidence demonstrating surprising results," "commercial success," and "praise by others." *Id.*; *see also* EX2007 (Comm'n Op.) at 2 (adopting same).

The only response Aylo gives to these findings is to suggest in conclusory attorney argument, without supporting evidence, that the inventors' "superior" Move Media Player does not "meet[] the claims" and that the ITC's finding of nexus was "incorrect." Pet. at 58-59. Aylo's first assertion, however, ignores the ITC's consideration of DISH's other arguments that "it is entitled to a presumption of nexus because the product it relies on, the Move Media Player, is 'the invention disclosed and claimed' and is coextensive with the asserted claims. EX1009 (Final ID) at 212. Nothing suggests that the ITC relied exclusively, or even at all, on DISH's argument that respondents conceded the nexus point.

Because Petitioner has failed to address adequately the objective indicia of non-obviousness, the Board should exercise its discretion to deny this Petition. *See Stryker Corp*, IPR2019-00817 at *27-*29 (exercising discretion to deny petition "considering the factors enumerated in *Becton, Dickinson* and in further view of the secondary considerations evidence").

VII. CONCLUSION

For the foregoing reasons, DISH respectfully requests the Board deny Petitioner's request for IPR of U.S. Patent No. 11,677,798.

Respectfully Submitted,

May 21, 2024

/ Eliot D. Williams /

Eliot D. Williams (Reg. No. 50,822)
BAKER BOTTS L.L.P.
700 K Street, N.W.
Washington, D.C. 20001

202.639.1334

G. Hopkins Guy III (Reg. No. 35,886)
BAKER BOTTS L.L.P.
1001 Page Mill Road, Bldg. 1, Suite 200
Palo Alto, California 94304-1007
650.739.7500

Ali Dhanani (Reg. No. 66,233)
Thomas B. Carter Jr. (Reg. No. 76,040)
BAKER BOTTS L.L.P.
910 Louisiana St.
Houston, TX 77002
713.229.1108

Attorneys for Patent Owner, DISH Technologies L.L.C.

APPENDIX 1 – COMPARISON OF LEANING CITATIONS

Aylo's IPR Citations to Leaning (EX1004)	Citations to Leaning US (EX2001)
2:9-32	[0016]-[0018]
3:5-4:34	[0019]-[0034]
5:4-7:7	[0036]-[0050]
8:1-11:1	[0051]-[0057]
12:8-34	[0063]-[0064]
13:23-14:24	[0072]-[0087]
16:6-17:10	[0090]-[0095]
18:3-19:5	[0101]-[0114]
19:6-21	[0115]-[0117]
20:1-41	[0119]-[0120]
Chart @ 7	Chart at [0049]
Chart @ 9-11	Chart at [0057]
Fig. 1	Fig. 1
Fig. 2	Fig. 2
Fig. 3	Fig. 3
Fig. 4	Fig. 4
Fig. 5	Fig. 5

APPENDIX 2 – COMPARISON OF LEANING CITATIONS

Aylo's IPR Citations to Leaning (EX1004)	Citations to Leaning US (EX2001)
Abstract: "Delivery of recorded audio or video material over a telecommunications link (2) from a server (1) to a terminal (3)"	Abstract: "A system for transmitting audio signals over a telecommunications link …." [0001]: "The present invention is concerned with the delivery, over a telecommunications link, of digitally coded material for presentation to a user." [0016]: "The system shown in FIG. 1 has as its object the delivery, to a user, of digitally coded audio signals (for example, of recorded music or speech) via a telecommunications network to a user terminal where the corresponding sounds are to be played to the user. However, as will be discussed in more detail below, the system may be used to convey video signals instead of, or in addition to, audio signals."
Abstract: "is accomplished by dividing the material into a sequence of sub-files each of which is independently requested by the terminal,"	Abstract: "[T]he input signal is notionally divided into temporal portions and each is coded by taking it … and encoding it …." [0019]: "Originally this would have been created as a single data file, and on a conventional streamer would be stored as this one single file. Here, however, the file is divided into smaller files before being stored on the server 1." [0027]-[0029]: "The partitioning of the file into these smaller sub-files may typically be performed by the person preparing the file for loading onto the web server 1. (The expression "sub-files" is used here to distinguish them from the original file containing the whole recording: it should however be emphasised that, as far as the server is concerned each "sub-file" is just a file like any other file). The precise manner of

Aylo's IPR Citations to Leaning (EX1004)	**Citations to Leaning US (EX2001)**
	their creation will be described more fully below. Once created, these sub-files are uploaded onto the server in a conventional manner just like any other file being loaded onto a web server. Of course the filename could also contain characters identifying the particular recording (the sub-file could also be "tagged" with additional information—when you play an MP3 file you get information on the author, copyright etc), but in this example the sub-files are stored on the server in a directory or folder specific to the particular recording—e.g. mp3_bwv565. Thus a sub-file, when required, may be requested in the form: http:\\www.server1.com/mp3_bwv565/000003.bin where "www.server1.com" is the URL of the server 1."
Abstract: "which thereby has control of the rate of delivery."	[0018]: "Conventionally, a server for delivery of MP3 files takes the form of a so-called streamer which includes processing arrangements for the dynamic control of the rate at which data are transmitted depending on the replay requirements at the user terminal, for the masking of errors due to packet loss and, if user interaction is allowed, the control of the flow of data between server and client; here however the server 1 contains no such provision. Thus it is merely an ordinary "web server"." [0057]: "The actual rate change is effected simply by the player program changing the relevant part of the sub-file address for example, changing "008k" to "024k" to increase the data rate from 8 to 24 kbit/s, and changing the current rate parameter to match. As a result, the next

Aylo's IPR Citations to Leaning (EX1004)	Citations to Leaning US (EX2001)
	request to the server becomes a request for the higher (or lower) rate, and the sub-file from the new directory is received, decoded and entered into the buffer."
Abstract: "Provision may be made for switching between alternative sub-file sets representing alternative delivery modes of data rates."	[0045]: "a) the server stores two or more versions of the recording, recorded at different compression rates (for example at compressions corresponding to (continuous) data rates of 8, 16, 24 and 32 kbit/s respectively) and the player program is able to switch automatically between them."
1:3-19: "The present invention is concerned with the delivery, over a telecommunications link, of digitally coded material for presentation to a user. In known systems of this type, a special server - often called a "streamer", controls delivery of material to a user terminal. Often, in the server, an item of material to be transmitted is stored as a single file; though U.S. patent 5 610 841 describes a video server which stores the material segmented into "media segment files". Another such system is described in published European patent application EP-A-669 587, where network congestion is accommodated by the terminal monitoring the contents of its receive buffer and, where appropriate, requesting the server to adjust its video data rate.	[0016]: "The system shown in FIG. 1 has as its object the delivery, to a user, of digitally coded audio signals (for example, of recorded music or speech) via a telecommunications network to a user terminal where the corresponding sounds are to be played to the user. However, as will be discussed in more detail below, the system may be used to convey video signals instead of, or in addition to, audio signals." [0003]: "notionally dividing an input signal into successive temporal portions;" [0032]: "Turning now to the terminal, this may typically take the form of a conventional desktop computer, with, however, additional software for handling the reception of the audio files discussed. If desired, the terminal could take the form of a handheld computer, or even be incorporated into a mobile telephone. Thus FIG. 2 shows such a terminal with a central processor 30, memory 31, a disk store 32, a keyboard 33 video display 34, communications interface 35, and audio interface ("sound card") 36."

Aylo's IPR Citations to Leaning (EX1004)	**Citations to Leaning US (EX2001)**
According to one aspect of the invention there is provided a terminal for playing audio or video material which is stored on a remote server as a set of files representing successive temporal portions of the said material, the terminal comprising: a telecommunications interface for communication with the server; a buffer for receiving the files from the telecommunications interface; means for playing the contents of the buffer; and control means responsive to the state of the buffer to generate request messages for further files for replenishment of the buffer."	[0036]: "The program constructs a request message for the file having this URL and transmits it to the server 1 via the communications interface 35 and the internet 2." [0057]: "As a result, the next request to the server becomes a request for the higher (or lower) rate, and the sub-file from the new directory is received, decoded and entered into the buffer." Fig.2. 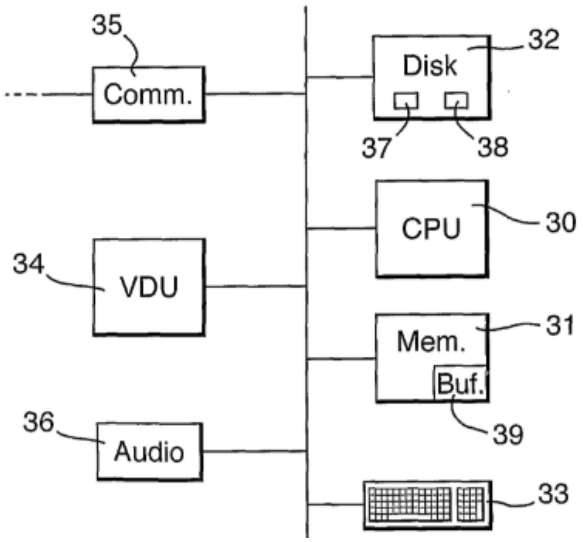 [0035]-[0042]: "3. The player program 37 includes an MP3 decoder, the operation of which is, in itself, conventional. Of more interest in the present context are the control functions of the program which are as follows. 4. The player program, having received the URL, adds to this the filename of the first sub-file, to produce a complete address for the sub-file—i.e. www.server1/mp3_bwv565/000000.bin. It will be observed that this system is organised on the basis that the sub-files are named in the manner

Aylo's IPR Citations to Leaning (EX1004)	Citations to Leaning US (EX2001)
	indicated above, so that the terminal does not need to be informed of the filenames. The program constructs a request message for the file having this URL and transmits it to the server 1 via the communications interface 35 and the internet 2. (Processes for translating the URL into an IP address and for error reporting of invalid, incomplete or unavailable URLs are conventional and will not therefore be described). We envisage that the player program would send the requests directly to the communications interface, rather than via the browser. The server responds by transmitting the required sub-file. 5. The player program determines from the file the audio decoding used in this sub-file and decodes the file back to raw PCM values in accordance with the relevant standard (MP3 in this example), making a note of the play time of this sub-file. Generally an audio file contains an identifier at the beginning of the file which states the encoding used. The decoded audio data is then stored in the audio buffer 38. 6. The player program has a parameter called the playout time T p. In this example it is set at 10 seconds (it could be made user-selectable, if desired). It determines the degree of buffering that the terminal performs. 7. The player program increments the filename to 000001.bin and requests, receives, decodes and stores this second sub-file as described in (4) and (5) above. It repeats this process until the contents of the buffer reach or exceed the playout time T p. Note that it is not actually essential that the decoding occurs before the buffer but it simplifies matters as since the audio is decoded

Aylo's IPR Citations to Leaning (EX1004)	Citations to Leaning US (EX2001)
	back to raw PCM then the duration of the buffered material is then explicitly known. It simplifies the control of the audio buffer if each of the sub-files is the same audio playback size. 8. Having reached the playout threshold T p the decoded data are sent from the buffer to the audio interface 36 which plays the sound through a loudspeaker (not shown). 9. Whilst playing the sounds as in (8) above, the player program continually monitors the state of buffer fullness and whenever this falls below T p it increments the filename again and obtains a further sub-file from the server. This process is repeated until a "file not found error" is returned. 10. If, during this process, the buffer becomes empty, the player program simply ceases playing until further data arrives."
1:20-28: "In another aspect, the invention provides a method of transmitting digitally coded audio or video material comprising: partitioning the material into a plurality of discrete files each representing successive temporal portions of the said material; storing the files at a first station; and at a second station – a) transmitting to the first station requests for successive respective ones of the files;	[0016]: "The system shown in FIG. 1 has as its object the delivery, to a user, of digitally coded audio signals (for example, of recorded music or speech) via a telecommunications network to a user terminal where the corresponding sounds are to be played to the user. However, as will be discussed in more detail below, the system may be used to convey video signals instead of, or in addition to, audio signals." [0001]-[0003]: "The present invention is concerned with the delivery, over a telecommunications link, of digitally coded material for presentation to a user. According to one aspect of the invention there is provided a method of encoding audio signals

Aylo's IPR Citations to Leaning (EX1004)	Citations to Leaning US (EX2001)
b) receiving the files; and c) decoding the files for replay of the material."	comprising notionally dividing an input signal into successive temporal portions …." [0027]-[0029]: "The partitioning of the file into these smaller sub-files may typically be performed by the person preparing the file for loading onto the web server 1. (The expression "sub-files" is used here to distinguish them from the original file containing the whole recording: it should however be emphasised that, as far as the server is concerned each "sub-file" is just a file like any other file). The precise manner of their creation will be described more fully below. Once created, these sub-files are uploaded onto the server in a conventional manner just like any other file being loaded onto a web server. Of course the filename could also contain characters identifying the particular recording (the sub-file could also be "tagged" with additional information—when you play an MP3 file you get information on the author, copyright etc), but in this example the sub-files are stored on the server in a directory or folder specific to the particular recording—e.g. mp3_bwv565. Thus a sub-file, when required, may be requested in the form: http:\\www.server1.com/mp3_bwv565/000003.bin where "www.server1.com" is the URL of the server 1." [0035]-[0042]: "3. The player program 37 includes an MP3 decoder, the operation of which is, in itself, conventional. Of more interest in the present context are the control functions of the program which are as follows.

Aylo's IPR Citations to Leaning (EX1004)	Citations to Leaning US (EX2001)
	4. The player program, having received the URL, adds to this the filename of the first sub-file, to produce a complete address for the sub-file—i.e. www.server1/mp3_bwv565/000000.bin. It will be observed that this system is organised on the basis that the sub-files are named in the manner indicated above, so that the terminal does not need to be informed of the filenames. The program constructs a request message for the file having this URL and transmits it to the server 1 via the communications interface 35 and the internet 2. (Processes for translating the URL into an IP address and for error reporting of invalid, incomplete or unavailable URLs are conventional and will not therefore be described). We envisage that the player program would send the requests directly to the communications interface, rather than via the browser. The server responds by transmitting the required sub-file. 5. The player program determines from the file the audio decoding used in this sub-file and decodes the file back to raw PCM values in accordance with the relevant standard (MP3 in this example), making a note of the play time of this sub-file. Generally an audio file contains an identifier at the beginning of the file which states the encoding used. The decoded audio data is then stored in the audio buffer 38. 6. The player program has a parameter called the playout time T p. In this example it is set at 10 seconds (it could be made user-selectable, if desired). It determines the degree of buffering that the terminal performs. 7. The player program increments the filename to 000001.bin and requests, receives, decodes

Aylo's IPR Citations to Leaning (EX1004)	Citations to Leaning US (EX2001)
	and stores this second sub-file as described in (4) and (5) above. It repeats this process until the contents of the buffer reach or exceed the playout time T p. Note that it is not actually essential that the decoding occurs before the buffer but it simplifies matters as since the audio is decoded back to raw PCM then the duration of the buffered material is then explicitly known. It simplifies the control of the audio buffer if each of the sub-files is the same audio playback size. 8. Having reached the playout threshold T p the decoded data are sent from the buffer to the audio interface 36 which plays the sound through a loudspeaker (not shown). 9. Whilst playing the sounds as in (8) above, the player program continually monitors the state of buffer fullness and whenever this falls below T p it increments the filename again and obtains a further sub-file from the server. This process is repeated until a "file not found error" is returned. 10. If, during this process, the buffer becomes empty, the player program simply ceases playing until further data arrives."

CERTIFICATE OF SERVICE

Pursuant to 37 C.F.R. §§ 42.6(e), we certify that an electronic copy of the foregoing PATENT OWNER'S PRELIMINARY RESPONSE PURSUANT TO 37 C.F.R. § 42.107(a) along with any accompanying exhibits was served on Petitioner's counsel of record at the following address:

FMGasparo@venable.com
IGPaquette@venable.com.

Date: May 21, 2024

/ Eliot D. Williams /

Eliot D. Williams (Reg. No. 50,822)
G. Hopkins Guy III (Reg. No. 35,886)
Ali Dhanani (Reg. No. 66,233)
Thomas B. Carter Jr. (Reg. No. 76,040)
BAKER BOTTS L.L.P.
700 K Street, N.W.
Washington, D.C. 20001
202.639.1334

Attorneys for Patent Owner, DISH Technologies L.L.C.

CERTIFICATION UNDER 37 C.F.R. § 42.24(d)

Pursuant to 37 C.F.R. § 42.24(d), the undersigned hereby certifies that the word count under §42.24(b)(1) for the foregoing Patent Owner Preliminary Response to the Petition for *Inter Partes* Review totals 8,972 words, within the 14,000 word limit allowed under § 42.24(a)(1)(i).

Date: May 21, 2024

/ Eliot D. Williams /

Eliot D. Williams (Reg. No. 50,822)
BAKER BOTTS L.L.P.
700 K Street, N.W.
Washington, D.C. 20001
202.639.1334

G. Hopkins Guy III (Reg. No. 35,886)
BAKER BOTTS L.L.P.
1001 Page Mill Road, Bldg. 1, Suite 200
Palo Alto, California 94304-1007
650.739.7500

Ali Dhanani (Reg. No. 66,233)
Thomas B. Carter Jr. (Reg. No. 76,040)
BAKER BOTTS L.L.P.
910 Louisiana St.
Houston, TX 77002
713.229.1108

Attorneys for Patent Owner, DISH Technologies L.L.C.