US011266335B2

(12) **United States Patent**
Donnay et al.

(10) **Patent No.: US 11,266,335 B2**
(45) **Date of Patent: Mar. 8, 2022**

(54) **MEDICAL DEVICE INSERTERS AND PROCESSES OF INSERTING AND USING MEDICAL DEVICES**

(71) Applicant: **ABBOTT DIABETES CARE INC.**, Alameda, CA (US)

(72) Inventors: **Manuel Luis Donnay**, San Francisco, CA (US); **Tuan Nguyen**, Dublin, CA (US); **Louis G. Pace**, San Carlos, CA (US); **Peter G. Robinson**, Alamo, CA (US)

(73) Assignee: **ABBOTT DIABETES CARE INC.**, Alameda, CA (US)

(*) Notice: Subject to any disclaimer, the term of this patent is extended or adjusted under 35 U.S.C. 154(b) by 0 days.

(21) Appl. No.: **17/019,110**

(22) Filed: **Sep. 11, 2020**

(65) **Prior Publication Data**

US 2021/0007651 A1 Jan. 14, 2021

Related U.S. Application Data

(63) Continuation of application No. 16/002,847, filed on Jun. 7, 2018, which is a continuation of application

(Continued)

(51) **Int. Cl.**
A61B 5/15 (2006.01)
A61B 5/151 (2006.01)

(Continued)

(52) **U.S. Cl.**
CPC ***A61B 5/150022*** (2013.01); ***A61B 5/1411*** (2013.01); ***A61B 5/14503*** (2013.01);

(Continued)

(58) **Field of Classification Search**
CPC A61B 5/14503; A61B 5/1473; A61B 5/14865; A61B 5/6849; A61B 5/14532;

(Continued)

(56) **References Cited**

U.S. PATENT DOCUMENTS

3,123,790 A 3/1964 Tyler
3,260,656 A 7/1966 Ross, Jr.

(Continued)

FOREIGN PATENT DOCUMENTS

CA 2291105 12/1998
DE 4401400 7/1995

(Continued)

OTHER PUBLICATIONS

Alcock, S.J., et al., "Continuous analyte monitoring to aid clinical practice," IEEE Engineering in Medicine & Biology Magazine, 13:319-25 (1994).

(Continued)

Primary Examiner — Devin B Henson
Assistant Examiner — H. Q. Nguyen
(74) *Attorney, Agent, or Firm* — One LLP

(57) **ABSTRACT**

An apparatus for insertion of a medical device in the skin of a subject is provided, as well as methods of inserting medical devices. Embodiments include removing a substantially cylindrical cap from an inserter to expose a substantially cylindrical sleeve, removing a cover from a substantially cylindrical container holding sensor components, and fitting the sensor components into the inserter.

27 Claims, 99 Drawing Sheets

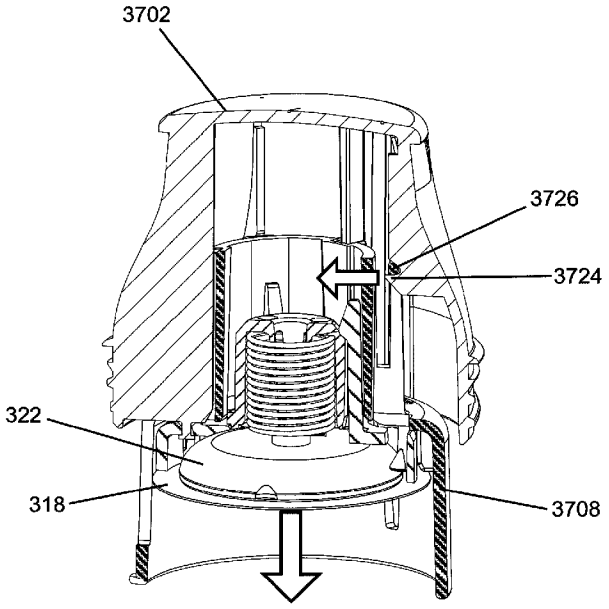

DEXCOM
EXHIBIT 1001

Related U.S. Application Data

No. 13/436,768, filed on Mar. 30, 2012, now Pat. No. 10,010,280, which is a continuation of application No. 13/071,461, filed on Mar. 24, 2011, now Pat. No. 9,215,992.

(60) Provisional application No. 61/411,262, filed on Nov. 8, 2010, provisional application No. 61/361,374, filed on Jul. 2, 2010, provisional application No. 61/345,562, filed on May 17, 2010, provisional application No. 61/317,243, filed on Mar. 24, 2010.

(51) **Int. Cl.**

A61B 5/145	(2006.01)
A61B 5/00	(2006.01)
A61B 5/157	(2006.01)
A61B 17/34	(2006.01)
A61M 5/158	(2006.01)
A61B 5/01	(2006.01)
A61B 17/00	(2006.01)

(52) **U.S. Cl.**

CPC ***A61B 5/14532*** (2013.01); ***A61B 5/14542*** (2013.01); ***A61B 5/14546*** (2013.01); ***A61B 5/157*** (2013.01); ***A61B 5/1513*** (2013.01); ***A61B 5/1519*** (2013.01); ***A61B 5/15087*** (2013.01); ***A61B 5/15107*** (2013.01); ***A61B 5/15113*** (2013.01); ***A61B 5/15117*** (2013.01); ***A61B 5/15186*** (2013.01); ***A61B 5/15194*** (2013.01); ***A61B 5/150259*** (2013.01); ***A61B 5/150282*** (2013.01); ***A61B 5/150396*** (2013.01); ***A61B 5/150419*** (2013.01); ***A61B 5/150427*** (2013.01); ***A61B 5/150511*** (2013.01); ***A61B 5/6848*** (2013.01); ***A61B 5/6865*** (2013.01); ***A61B 17/34*** (2013.01); ***A61B 17/3468*** (2013.01); ***A61M 5/158*** (2013.01); *A61B 5/00* (2013.01); *A61B 5/0002* (2013.01); *A61B 5/01* (2013.01); *A61B 5/15016* (2013.01); *A61B 5/150732* (2013.01); *A61B 2017/00384* (2013.01); *A61B 2560/063* (2013.01); *A61M 2005/1585* (2013.01)

(58) **Field of Classification Search**

CPC A61B 2560/063; A61B 17/3468; A61B 5/15144; A61B 5/15113; A61B 5/15186; A61B 5/15188; A61B 5/1519; A61B 5/15192; A61B 5/15194; A61B 2017/347; A61B 5/1411; A61B 5/15029; A61B 5/150282; A61B 5/15107; A61B 5/15117; A61M 2005/1585

USPC 600/583–584

See application file for complete search history.

(56) **References Cited**

U.S. PATENT DOCUMENTS

3,581,062	A	5/1971	Aston
3,653,841	A	4/1972	Klein
3,670,727	A	6/1972	Reiterman
3,719,564	A	3/1973	Lilly, Jr. et al.
3,776,832	A	12/1973	Oswin et al.
3,837,339	A	9/1974	Aisenberg et al.
3,926,760	A	12/1975	Allen et al.
3,949,388	A	4/1976	Fuller
3,972,320	A	8/1976	Kalman
3,979,274	A	9/1976	Newman
4,008,717	A	2/1977	Kowarski
4,016,866	A	4/1977	Lawton
4,036,749	A	7/1977	Anderson
4,055,175	A	10/1977	Clemens et al.
4,059,406	A	11/1977	Fleet
4,076,596	A	2/1978	Connery et al.
4,098,574	A	7/1978	Dappen
4,100,048	A	7/1978	Pompei et al.
4,120,292	A	10/1978	LeBlanc, Jr. et al.
4,129,128	A	12/1978	McFarlane
4,151,845	A	5/1979	Clemens
4,168,205	A	9/1979	Danninger et al.
4,172,770	A	10/1979	Semersky et al.
4,178,916	A	12/1979	McNamara
4,206,755	A	6/1980	Klein
4,224,125	A	9/1980	Nakamura et al.
4,240,438	A	12/1980	Updike et al.
4,245,634	A	1/1981	Albisser et al.
4,247,297	A	1/1981	Berti et al.
4,294,258	A	10/1981	Bernard
4,327,725	A	5/1982	Cortese et al.
4,340,458	A	7/1982	Lerner et al.
4,344,438	A	8/1982	Schultz
4,349,728	A	9/1982	Phillips et al.
4,352,960	A	10/1982	Dormer et al.
4,356,074	A	10/1982	Johnson
4,365,637	A	12/1982	Johnson
4,366,033	A	12/1982	Richter et al.
4,373,527	A	2/1983	Fischell
4,375,399	A	3/1983	Havas et al.
4,384,586	A	5/1983	Christiansen
4,390,621	A	6/1983	Bauer
4,401,122	A	8/1983	Clark, Jr.
4,404,066	A	9/1983	Johnson
4,418,148	A	11/1983	Oberhardt
4,425,920	A	1/1984	Bourland et al.
4,427,770	A	1/1984	Chen et al.
4,431,004	A	2/1984	Bessman et al.
4,436,094	A	3/1984	Cerami
4,440,175	A	4/1984	Wilkins
4,450,842	A	5/1984	Zick et al.
4,458,686	A	7/1984	Clark, Jr.
4,461,691	A	7/1984	Frank
4,469,110	A	9/1984	Slama
4,477,314	A	10/1984	Richter et al.
4,478,976	A	10/1984	Goertz et al.
4,484,987	A	11/1984	Gough
4,494,950	A	1/1985	Fischell
4,509,531	A	4/1985	Ward
4,522,690	A	6/1985	Venkatasetty
4,524,114	A	6/1985	Samuels et al.
4,526,661	A	7/1985	Steckhan et al.
4,527,240	A	7/1985	Kvitash
4,534,356	A	8/1985	Papadakis
4,538,616	A	9/1985	Rogoff
4,543,955	A	10/1985	Schroeppel
4,545,382	A	10/1985	Higgins et al.
4,552,840	A	11/1985	Riffer
4,560,534	A	12/1985	Kung et al.
4,571,292	A	2/1986	Liu et al.
4,573,994	A	3/1986	Fischell et al.
4,581,336	A	4/1986	Malloy et al.
4,595,011	A	6/1986	Phillips
4,619,754	A	10/1986	Niki et al.
4,619,793	A	10/1986	Lee
4,627,445	A	12/1986	Garcia et al.
4,627,842	A	12/1986	Katz
4,627,908	A	12/1986	Miller
4,633,878	A	1/1987	Bombardieri
4,637,403	A	1/1987	Garcia et al.
4,639,062	A	1/1987	Taniguchi et al.
4,650,547	A	3/1987	Gough
4,654,197	A	3/1987	Lilja et al.
4,655,880	A	4/1987	Liu
4,655,885	A	4/1987	Hill et al.
4,671,288	A	6/1987	Gough
4,675,346	A	6/1987	Lin et al.
4,679,562	A	7/1987	Luksha
4,680,268	A	7/1987	Clark, Jr.
4,682,602	A	7/1987	Prohaska
4,684,537	A	8/1987	Graetzel et al.
4,685,463	A	8/1987	Williams

(56) **References Cited**

U.S. PATENT DOCUMENTS

4,685,466	A	8/1987	Rau
4,698,057	A	10/1987	Joishy
4,703,756	A	11/1987	Gough et al.
4,711,245	A	12/1987	Higgins et al.
4,711,247	A	12/1987	Fishman
4,717,673	A	1/1988	Wrighton et al.
4,721,601	A	1/1988	Wrighton et al.
4,721,677	A	1/1988	Clark, Jr.
4,726,378	A	2/1988	Kaplan
4,726,716	A	2/1988	McGuire
4,729,672	A	3/1988	Takagi
4,731,726	A	3/1988	Allen, III
4,749,985	A	6/1988	Corsberg
4,755,173	A	7/1988	Konopka
4,757,022	A	7/1988	Shults et al.
4,758,323	A	7/1988	Davis et al.
4,759,371	A	7/1988	Franetzki
4,759,828	A	7/1988	Young et al.
4,764,416	A	8/1988	Ueyama et al.
4,776,944	A	10/1988	Janata et al.
4,777,953	A	10/1988	Ash et al.
4,779,618	A	10/1988	Mund et al.
4,781,683	A	11/1988	Wozniak et al.
4,781,798	A	11/1988	Gough
4,784,736	A	11/1988	Lonsdale et al.
4,795,707	A	1/1989	Niiyama et al.
4,796,634	A	1/1989	Huntsman et al.
4,805,624	A	2/1989	Yao et al.
4,813,424	A	3/1989	Wilkins
4,815,469	A	3/1989	Cohen et al.
4,820,399	A	4/1989	Senda et al.
4,822,337	A	4/1989	Newhouse et al.
4,830,959	A	5/1989	McNeil et al.
4,832,797	A	5/1989	Vadgama et al.
RE32,947	E	6/1989	Dormer et al.
4,840,893	A	6/1989	Hill et al.
4,848,351	A	7/1989	Finch
4,852,025	A	7/1989	Herpichböhm
4,854,322	A	8/1989	Ash et al.
4,871,351	A	10/1989	Feingold
4,871,440	A	10/1989	Nagata et al.
4,874,500	A	10/1989	Madou et al.
4,890,620	A	1/1990	Gough
4,894,137	A	1/1990	Takizawa et al.
4,895,147	A	1/1990	Bodicky et al.
4,897,162	A	1/1990	Lewandowski et al.
4,897,173	A	1/1990	Nankai et al.
4,909,908	A	3/1990	Ross et al.
4,911,794	A	3/1990	Parce et al.
4,917,800	A	4/1990	Lonsdale et al.
4,919,141	A	4/1990	Zier et al.
4,919,767	A	4/1990	Vadgama et al.
4,921,199	A	5/1990	Villaveces
4,923,586	A	5/1990	Katayama et al.
4,925,268	A	5/1990	Iyer et al.
4,927,516	A	5/1990	Yamaguchi et al.
4,934,369	A	6/1990	Maxwell
4,935,105	A	6/1990	Churchouse
4,935,345	A	6/1990	Guibeau et al.
4,938,860	A	7/1990	Wogoman
4,944,299	A	7/1990	Silvian
4,950,378	A	8/1990	Nagara
4,953,552	A	9/1990	DeMarzo
4,954,129	A	9/1990	Giuliani et al.
4,969,468	A	11/1990	Byers et al.
4,970,145	A	11/1990	Bennetto et al.
4,974,929	A	12/1990	Curry
4,986,271	A	1/1991	Wilkins
4,988,341	A	1/1991	Columbus et al.
4,994,167	A	2/1991	Shults et al.
4,995,402	A	2/1991	Smith et al.
5,000,180	A	3/1991	Kuypers et al.
5,001,054	A	3/1991	Wagner
5,006,110	A	4/1991	Garrison et al.
5,013,161	A	5/1991	Zaragoza et al.
5,019,974	A	5/1991	Beckers
5,035,860	A	7/1991	Kleingeld et al.
5,036,860	A	8/1991	Leigh et al.
5,047,044	A	9/1991	Smith et al.
5,050,612	A	9/1991	Matsumura
5,055,171	A	10/1991	Peck
5,058,592	A	10/1991	Whisler
5,070,535	A	12/1991	Hochmair et al.
5,082,550	A	1/1992	Rishpon et al.
5,082,786	A	1/1992	Nakamoto
5,089,112	A	2/1992	Skotheim et al.
5,095,904	A	3/1992	Seligman et al.
5,101,814	A	4/1992	Palti
5,106,365	A	4/1992	Hernandez
5,108,564	A	4/1992	Szuminsky et al.
5,108,889	A	4/1992	Smith et al.
5,109,850	A	5/1992	Blanco et al.
5,120,420	A	6/1992	Nankai et al.
5,122,925	A	6/1992	Inpyn
5,126,034	A	6/1992	Carter et al.
5,133,856	A	7/1992	Yamaguchi et al.
5,135,003	A	8/1992	Souma
5,140,985	A	8/1992	Schroeder et al.
5,141,868	A	8/1992	Shanks et al.
5,161,532	A	11/1992	Joseph
5,162,407	A	11/1992	Turner
5,165,407	A	11/1992	Wilson et al.
5,174,291	A	12/1992	Schoonen et al.
5,190,041	A	3/1993	Palti
5,192,416	A	3/1993	Wang et al.
5,198,367	A	3/1993	Aizawa et al.
5,202,261	A	4/1993	Musho et al.
5,205,920	A	4/1993	Oyama et al.
5,208,154	A	5/1993	Weaver et al.
5,209,229	A	5/1993	Gilli
5,217,595	A	6/1993	Smith et al.
5,228,449	A	7/1993	Christ et al.
5,229,282	A	7/1993	Yoshioka et al.
5,234,835	A	8/1993	Nestor et al.
5,238,729	A	8/1993	Debe
5,246,867	A	9/1993	Lakowicz et al.
5,250,439	A	10/1993	Musho et al.
5,262,035	A	11/1993	Gregg et al.
5,262,305	A	11/1993	Heller et al.
5,264,103	A	11/1993	Yoshioka et al.
5,264,104	A	11/1993	Gregg et al.
5,264,105	A	11/1993	Gregg et al.
5,264,106	A	11/1993	McAleer et al.
5,271,815	A	12/1993	Wong
5,279,294	A	1/1994	Anderson
5,284,156	A	2/1994	Schramm et al.
5,285,792	A	2/1994	Sjoquist et al.
5,286,362	A	2/1994	Hoenes et al.
5,286,364	A	2/1994	Yacynych et al.
5,288,636	A	2/1994	Pollmann et al.
5,293,546	A	3/1994	Tadros et al.
5,293,877	A	3/1994	O'Hara et al.
5,299,571	A	4/1994	Mastrototaro
5,320,098	A	6/1994	Davidson
5,320,725	A	6/1994	Gregg et al.
5,322,063	A	6/1994	Allen et al.
5,337,747	A	8/1994	Neftel
5,340,722	A	8/1994	Wolfbeis et al.
5,342,789	A	8/1994	Chick et al.
5,352,348	A	10/1994	Young et al.
5,356,786	A	10/1994	Heller et al.
5,360,404	A	11/1994	Novacek et al.
5,368,028	A	11/1994	Palti
5,372,133	A	12/1994	Hogen Esch
5,372,427	A	12/1994	Padovani et al.
5,376,251	A	12/1994	Kaneko et al.
5,378,628	A	1/1995	Gratzel et al.
5,379,238	A	1/1995	Stark
5,387,327	A	2/1995	Khan
5,390,671	A	2/1995	Lord et al.
5,391,250	A	2/1995	Cheney, II et al.
5,395,504	A	3/1995	Saurer et al.
5,400,782	A	3/1995	Beaubiah
5,408,999	A	4/1995	Singh et al.

(56) **References Cited**

U.S. PATENT DOCUMENTS

5,411,647	A	5/1995	Johnson et al.
5,425,361	A	6/1995	Fenzlein et al.
5,431,160	A	7/1995	Wilkins
5,431,921	A	7/1995	Thombre
5,437,999	A	8/1995	Diebold et al.
5,462,645	A	10/1995	Albery et al.
5,469,846	A	11/1995	Khan
5,472,317	A	12/1995	Field et al.
5,482,473	A	1/1996	Lord et al.
5,489,414	A	2/1996	Schreiber et al.
5,491,474	A	2/1996	Suni et al.
5,494,562	A	2/1996	Maley et al.
5,496,453	A	3/1996	Uenoyama et al.
5,497,772	A	3/1996	Schulman et al.
5,507,288	A	4/1996	Bocker et al.
5,509,410	A	4/1996	Hill et al.
5,514,718	A	5/1996	Lewis et al.
5,516,832	A	5/1996	Kennan et al.
5,527,288	A	6/1996	Gross et al.
5,531,878	A	7/1996	Vadgama et al.
5,545,191	A	8/1996	Mann et al.
5,551,427	A	9/1996	Altman
5,560,357	A	10/1996	Faupei et al.
5,562,713	A	10/1996	Silvian
5,565,085	A	10/1996	Ikeda et al.
5,567,302	A	10/1996	Song et al.
5,568,806	A	10/1996	Cheney, II et al.
5,569,186	A	10/1996	Lord et al.
5,575,563	A	11/1996	Chiu et al.
5,582,184	A	12/1996	Erickson et al.
5,582,697	A	12/1996	Ikeda et al.
5,582,698	A	12/1996	Flaherty et al.
5,584,813	A	12/1996	Livingston et al.
5,586,553	A	12/1996	Halli et al.
5,589,326	A	12/1996	Deng et al.
5,593,852	A	1/1997	Heller et al.
5,596,150	A	1/1997	Arndt et al.
5,601,435	A	2/1997	Quy
5,609,575	A	3/1997	Larson et al.
5,613,978	A	3/1997	Harding
5,617,851	A	4/1997	Lipkovker
5,628,310	A	5/1997	Rao et al.
5,628,890	A	5/1997	Carter et al.
5,632,557	A	5/1997	Simons
5,640,954	A	6/1997	Pfeiffer et al.
5,651,869	A	7/1997	Yoshioka et al.
5,653,239	A	8/1997	Pompei et al.
5,660,163	A	8/1997	Schulman et al.
5,665,071	A	9/1997	Wyrick
5,665,222	A	9/1997	Heller et al.
5,670,031	A	9/1997	Hintsche et al.
5,680,858	A	10/1997	Hansen et al.
5,682,233	A	10/1997	Brinda
5,695,623	A	12/1997	Michel et al.
5,708,247	A	1/1998	McAleer et al.
5,711,001	A	1/1998	Bussan et al.
5,711,297	A	1/1998	Iliff et al.
5,711,861	A	1/1998	Ward et al.
5,711,862	A	1/1998	Sakoda et al.
5,733,044	A	3/1998	Rose et al.
5,749,656	A	3/1998	Boehm et al.
5,735,285	A	4/1998	Albert et al.
5,741,211	A	4/1998	Renirie et al.
5,766,131	A	6/1998	Kondo et al.
5,770,028	A	6/1998	Maley et al.
5,771,001	A	6/1998	Cobb
5,772,586	A	6/1998	Heinonen et al.
5,779,665	A	7/1998	Mastrototaro et al.
5,791,344	A	8/1998	Schulman et al.
5,800,420	A	9/1998	Gross et al.
5,807,375	A	9/1998	Gross et al.
5,820,551	A	10/1998	Hill et al.
5,820,622	A	10/1998	Gross et al.
5,822,715	A	10/1998	Worthington et al.
5,823,802	A	10/1998	Bartley
5,827,184	A	10/1998	Netherly et al.
5,840,020	A	11/1998	Heinonen et al.
5,842,983	A	12/1998	Abel et al.
5,851,197	A	12/1998	Marano et al.
5,865,804	A	2/1999	Bachynsky
5,885,211	A	3/1999	Eppstein et al.
5,899,855	A	5/1999	Brown
5,924,979	A	7/1999	Sedlow et al.
5,925,021	A	7/1999	Castellano et al.
5,931,814	A	8/1999	Alex et al.
5,948,006	A	9/1999	Mann
5,951,521	A	9/1999	Mastrototaro et al.
5,954,643	A	9/1999	Van Antwerp
5,954,685	A	9/1999	Tierny
5,957,854	A	9/1999	Besson et al.
5,961,451	A	10/1999	Reber et al.
5,964,993	A	10/1999	Blubaugh, Jr. et al.
5,965,380	A	10/1999	Heller et al.
5,971,922	A	10/1999	Arita et al.
5,972,199	A	10/1999	Heller et al.
5,987,353	A	11/1999	Khatchatrian et al.
5,995,860	A	11/1999	Sun et al.
6,001,067	A	12/1999	Shults et al.
6,017,335	A	1/2000	Burnham
6,022,368	A	2/2000	Gavronsky et al.
6,024,699	A	2/2000	Surwit et al.
6,026,321	A	2/2000	Miyata et al.
6,027,459	A	2/2000	Shain et al.
6,068,399	A	3/2000	Tseng
6,049,727	A	4/2000	Crothall
6,083,710	A	7/2000	Heller et al.
6,088,608	A	7/2000	Schulman et al.
6,091,975	A	7/2000	Daddona et al.
6,091,976	A	7/2000	Pfeiffer et al.
6,093,172	A	7/2000	Funderburk et al.
6,102,896	A	8/2000	Roser
6,103,033	A	8/2000	Say et al.
6,117,290	A	9/2000	Say et al.
6,119,028	A	9/2000	Schulman et al.
6,120,676	A	9/2000	Heller et al.
6,121,009	A	9/2000	Heller et al.
6,121,611	A	9/2000	Lindsay et al.
6,122,351	A	9/2000	Schlueter, Jr. et al.
6,134,461	A	10/2000	Say et al.
6,143,164	A	11/2000	Heller et al.
6,159,147	A	12/2000	Lichter et al.
6,162,611	A	12/2000	Heller et al.
6,175,752	B1	1/2001	Say et al.
6,200,265	B1	3/2001	Walsh et al.
6,212,416	B1	4/2001	Ward et al.
6,219,574	B1	4/2001	Cormier et al.
6,248,067	B1	6/2001	Causey, III et al.
6,254,536	B1	7/2001	DeVito
6,254,586	B1	7/2001	Mann et al.
6,275,717	B1	8/2001	Gross et al.
6,283,761	B1	9/2001	Joao
6,283,982	B1	9/2001	Levaughn et al.
6,284,478	B1	9/2001	Heller et al.
6,293,925	B1	9/2001	Safabash et al.
6,295,506	B1	9/2001	Heinonen et al.
6,304,766	B1	10/2001	Colvin, Jr.
6,306,104	B1	10/2001	Cunningham et al.
6,309,884	B1	10/2001	Cooper et al.
6,329,161	B1	12/2001	Heller et al.
6,336,269	B1	1/2002	Eldridge et al.
6,338,790	B1	1/2002	Feldman et al.
6,348,640	B1	2/2002	Navot et al.
6,359,444	B1	3/2002	Grimes
6,360,888	B1	3/2002	McIvor et al.
6,366,794	B1	4/2002	Moussy et al.
6,368,141	B1	4/2002	Van Antwerp et al.
6,368,274	B1	4/2002	Van Antwerp et al.
6,377,828	B1	4/2002	Chaiken et al.
6,379,301	B1	4/2002	Worthington et al.
6,409,740	B1	6/2002	Kuhr et al.
6,413,393	B1	7/2002	Van Antwerp et al.
6,418,332	B1	7/2002	Mastrototaro et al.
6,424,847	B1	7/2002	Mastrototaro et al.
6,427,088	B1	7/2002	Bowman, IV et al.

(56) **References Cited**

U.S. PATENT DOCUMENTS

6,437,679	B1	8/2002	Roques
6,440,068	B1	8/2002	Brown et al.
6,442,413	B1	8/2002	Silver
6,478,736	B1	11/2002	Mault
6,484,045	B1	11/2002	Holker et al.
6,484,046	B1	11/2002	Say et al.
6,510,344	B1	1/2003	Halpern
6,514,718	B2	2/2003	Heller et al.
6,520,326	B2	2/2003	McIvor et al.
6,522,927	B1	2/2003	Bishay et al.
6,551,494	B1	4/2003	Heller et al.
6,554,798	B1	4/2003	Mann et al.
6,558,320	B1	5/2003	Causey, III et al.
6,558,321	B1	5/2003	Burd et al.
6,560,471	B1	5/2003	Heller et al.
6,561,978	B1	5/2003	Conn et al.
6,562,001	B2	5/2003	Lebel et al.
6,564,105	B2	5/2003	Starkweather et al.
6,565,509	B1	5/2003	Say et al.
6,571,128	B2	5/2003	Lebel et al.
6,572,566	B2	6/2003	Effenhauser
6,576,101	B1	6/2003	Heller et al.
6,577,899	B2	6/2003	Lebel et al.
6,579,690	B1	6/2003	Bonnecaze et al.
6,585,644	B2	7/2003	Lebel et al.
6,589,229	B1	7/2003	Connelly et al.
6,591,125	B1	7/2003	Buse et al.
6,595,919	B2	7/2003	Berner et al.
6,603,995	B1	8/2003	Carter
6,604,050	B2	8/2003	Trippel et al.
6,605,200	B1	8/2003	Mao et al.
6,605,201	B1	8/2003	Mao et al.
6,607,509	B2	8/2003	Bobroff et al.
6,610,012	B2	8/2003	Mault
6,633,772	B2	10/2003	Ford et al.
6,635,014	B2	10/2003	Starkweather et al.
6,648,821	B2	11/2003	Lebel et al.
6,654,625	B1	11/2003	Say et al.
6,659,948	B2	12/2003	Lebel et al.
6,666,849	B1	12/2003	Marshall et al.
6,668,196	B1	12/2003	Villegas et al.
6,676,290	B1	1/2004	Lu
6,687,546	B2	2/2004	Lebel et al.
6,689,056	B1	2/2004	Kilcoyne et al.
6,694,191	B2	2/2004	Starkweather et al.
6,695,860	B1	2/2004	Ward et al.
6,699,188	B2	3/2004	Wessel
6,702,857	B2	3/2004	Brauker et al.
6,706,159	B2	3/2004	Moerman et al.
6,730,072	B2	5/2004	Shawgo et al.
6,733,446	B2	5/2004	Lebel et al.
6,740,075	B2	5/2004	Lebel et al.
6,741,877	B1	5/2004	Shults et al.
6,746,582	B2	6/2004	Heller et al.
6,758,810	B2	7/2004	Lebel et al.
6,770,030	B1	8/2004	Schaupp et al.
6,790,178	B1	9/2004	Mault et al.
6,809,653	B1	10/2004	Mann et al.
6,810,290	B2	10/2004	Lebel et al.
6,811,533	B2	11/2004	Lebel et al.
6,811,534	B2	11/2004	Bowman, IV et al.
6,813,519	B2	11/2004	Lebel et al.
6,837,858	B2	1/2005	Cunningham et al.
6,837,885	B2	1/2005	Koblish et al.
6,849,052	B2	2/2005	Ughigaki et al.
6,854,882	B2	2/2005	Chen
6,862,465	B2	3/2005	Shults et al.
6,873,268	B2	3/2005	Lebel et al.
6,881,551	B2	4/2005	Heller et al.
6,892,085	B2	5/2005	McIvor et al.
6,895,265	B2	5/2005	Silver
6,931,327	B2	8/2005	Goode, Jr. et al.
6,932,894	B2	8/2005	Mao et al.
6,936,006	B2	8/2005	Sabra
6,942,518	B2	9/2005	Liamos et al.
6,950,708	B2	9/2005	Bowman, IV et al.
6,958,705	B2	10/2005	Lebel et al.
6,959,211	B2	10/2005	Rule et al.
6,968,294	B2	11/2005	Gutta et al.
6,971,274	B2	12/2005	Olin
6,974,437	B2	12/2005	Lebel et al.
6,990,366	B2	1/2006	Say et al.
6,997,907	B2	2/2006	Safabash et al.
6,998,247	B2	2/2006	Monfre et al.
7,003,336	B2	2/2006	Holker et al.
7,003,340	B2	2/2006	Say et al.
7,003,341	B2	2/2006	Say et al.
7,024,245	B2	4/2006	Lebel et al.
7,025,743	B2	4/2006	Mann et al.
7,041,068	B2	5/2006	Freeman et al.
7,041,468	B2	5/2006	Drucker et al.
7,052,483	B2	5/2006	Wojcik
7,056,302	B2	6/2006	Douglas
7,074,307	B2	7/2006	Simpson et al.
7,081,195	B2	7/2006	Simpson et al.
7,097,637	B2	8/2006	Triplett et al.
7,098,803	B2	8/2006	Mann et al.
7,108,778	B2	9/2006	Simpson et al.
7,110,803	B2	9/2006	Shults et al.
7,113,821	B1	9/2006	Sun et al.
7,134,999	B2	11/2006	Brauker et al.
7,136,689	B2	11/2006	Shults et al.
7,171,274	B2	1/2007	Starkweather et al.
7,190,988	B2	3/2007	Say et al.
7,192,450	B2	3/2007	Brauker et al.
7,198,606	B2	4/2007	Boecker et al.
7,207,974	B2	4/2007	Safabash et al.
7,220,387	B2	5/2007	Flaherty et al.
7,226,978	B2	6/2007	Tapsak et al.
7,276,029	B2	10/2007	Goode, Jr. et al.
7,278,983	B2	10/2007	Ireland et al.
7,297,151	B2	11/2007	Boecker et al.
7,299,082	B2	11/2007	Feldman et al.
7,310,544	B2	12/2007	Brister et al.
7,318,816	B2	1/2008	Bobroff et al.
7,324,012	B2	1/2008	Mann et al.
7,329,239	B2	2/2008	Safabash et al.
7,335,294	B2	2/2008	Heller et al.
7,340,287	B2	3/2008	Mason et al.
7,340,309	B2	3/2008	Miazga et al.
7,354,420	B2	4/2008	Steil et al.
7,364,592	B2	4/2008	Carr-Brendel et al.
7,366,556	B2	4/2008	Brister et al.
7,379,765	B2	5/2008	Petisce et al.
7,381,184	B2	6/2008	Funderburk et al.
7,402,153	B2	7/2008	Steil et al.
7,407,493	B2	8/2008	Cane
7,416,541	B2	8/2008	Yuzhakov et al.
7,424,318	B2	9/2008	Brister et al.
7,455,663	B2	11/2008	Bikovsky
7,460,898	B2	12/2008	Brister et al.
7,467,003	B2	12/2008	Brister et al.
7,471,972	B2	12/2008	Rhodes et al.
7,494,465	B2	2/2009	Brister et al.
7,497,827	B2	3/2009	Brister et al.
7,519,408	B2	4/2009	Rasdal et al.
7,568,619	B2	8/2009	Todd et al.
7,583,990	B2	9/2009	Goode, Jr. et al.
7,591,801	B2	9/2009	Brauker et al.
7,599,726	B2	10/2009	Goode, Jr. et al.
7,613,491	B2	11/2009	Boock et al.
7,615,007	B2	11/2009	Shults et al.
7,632,228	B2	12/2009	Brauker et al.
7,637,868	B2	12/2009	Saint et al.
7,640,048	B2	12/2009	Dobbles et al.
7,643,798	B2	1/2010	Ljung
7,651,596	B2	1/2010	Petisce et al.
7,654,956	B2	2/2010	Brister et al.
7,657,297	B2	2/2010	Simpson et al.
7,666,149	B2	2/2010	Simons et al.
7,682,338	B2	3/2010	Griffin
7,697,967	B2	4/2010	Stafford
7,699,807	B2	4/2010	Faust et al.
7,711,402	B2	5/2010	Shults et al.

(56) **References Cited**

U.S. PATENT DOCUMENTS

7,713,574	B2	5/2010	Brister et al.
7,715,893	B2	5/2010	Kamath et al.
7,727,147	B1	6/2010	Osorio et al.
7,731,657	B2	6/2010	Stafford
7,736,344	B2	6/2010	Moberg et al.
7,763,042	B2	7/2010	Iio et al.
7,822,454	B1	10/2010	Alden et al.
7,850,652	B2	12/2010	Liniger et al.
7,885,697	B2	2/2011	Brister et al.
7,896,844	B2	3/2011	Thalmann et al.
7,955,297	B2	6/2011	Radmer et al.
7,985,203	B2	7/2011	Haueter et al.
8,172,805	B2	5/2012	Mogensen et al.
8,262,618	B2	9/2012	Scheurer
8,409,145	B2	4/2013	Raymond et al.
8,870,822	B2	10/2014	Thalmann et al.
8,880,138	B2	11/2014	Cho
9,295,786	B2	3/2016	Gottlieb et al.
2002/0010390	A1	1/2002	Guice et al.
2002/0013538	A1	1/2002	Teller
2002/0016568	A1	2/2002	Lebel et al.
2002/0019022	A1	2/2002	Dunn et al.
2002/0022855	A1	2/2002	Bobroff et al.
2002/0023852	A1	2/2002	McIvor et al.
2002/0042090	A1	4/2002	Heller et al.
2002/0057993	A1	5/2002	Maisey et al.
2002/0066764	A1	6/2002	Perry et al.
2002/0076966	A1	6/2002	Carron et al.
2002/0082487	A1	6/2002	Kollias et al.
2002/0103499	A1	8/2002	Perez et al.
2002/0106709	A1	8/2002	Potts et al.
2002/0119711	A1	8/2002	VanAntwerp et al.
2002/0128594	A1	9/2002	Das et al.
2002/0130042	A1	9/2002	Moerman et al.
2002/0151770	A1	10/2002	Noll et al.
2002/0154050	A1	10/2002	Krupp et al.
2002/0161288	A1	10/2002	Shin et al.
2002/0165462	A1	11/2002	Westbrook et al.
2002/0198444	A1	12/2002	Ughigaki et al.
2003/0002682	A1	1/2003	Smith et al.
2003/0023317	A1	1/2003	Brauker et al.
2003/0023461	A1	1/2003	Quintanilla et al.
2003/0028184	A1	2/2003	Lebel et al.
2003/0032867	A1	2/2003	Crothall et al.
2003/0032874	A1	2/2003	Rhodes et al.
2003/0042137	A1	3/2003	Mao et al.
2003/0060753	A1	3/2003	Starkweather et al.
2003/0065308	A1	4/2003	Lebel et al.
2003/0069510	A1	4/2003	Semler
2003/0077642	A1	4/2003	Fritsch et al.
2003/0078481	A1	4/2003	McIvor et al.
2003/0078560	A1	4/2003	Miller et al.
2003/0083686	A1	5/2003	Freeman et al.
2003/0097092	A1	5/2003	Flaherty
2003/0100040	A1	5/2003	Bonnecaze et al.
2003/0109775	A1	6/2003	O'Neil et al.
2003/0134347	A1	7/2003	Heller et al.
2003/0135333	A1	7/2003	Aceti et al.
2003/0144581	A1	7/2003	Conn et al.
2003/0144608	A1	7/2003	Kojima et al.
2003/0153900	A1	8/2003	Aceti et al.
2003/0155656	A1	8/2003	Chiu et al.
2003/0168338	A1	9/2003	Gao et al.
2003/0176933	A1	9/2003	Lebel et al.
2003/0187338	A1	10/2003	Say et al.
2003/0199790	A1	10/2003	Boecker et al.
2003/0199910	A1	10/2003	Boecker et al.
2003/0212379	A1	11/2003	Bylund et al.
2003/0217966	A1	11/2003	Tapsak et al.
2003/0225361	A1	12/2003	Sabra
2004/0010207	A1	1/2004	Flaherty et al.
2004/0011671	A1	1/2004	Shults et al.
2004/0040840	A1	3/2004	Mao et al.
2004/0045879	A1	3/2004	Shults et al.
2004/0054263	A1	3/2004	Moerman et al.
2004/0061232	A1	4/2004	Shah et al.
2004/0064068	A1	4/2004	DeNuzzio et al.
2004/0064133	A1	4/2004	Miller et al.
2004/0096959	A1	5/2004	Steine et al.
2004/0106858	A1	6/2004	Say et al.
2004/0106859	A1	6/2004	Say et al.
2004/0106860	A1	6/2004	Say et al.
2004/0116865	A1	6/2004	Bengtsson
2004/0122353	A1	6/2004	Shahmirian et al.
2004/0122489	A1	6/2004	Mazar et al.
2004/0116866	A1	7/2004	Gorman et al.
2004/0133164	A1	7/2004	Funderburk et al.
2004/0135684	A1	7/2004	Steinthal et al.
2004/0138588	A1	7/2004	Saikley et al.
2004/0147996	A1	7/2004	Miazga et al.
2004/0152622	A1	8/2004	Keith et al.
2004/0158207	A1	8/2004	Hunn et al.
2004/0167801	A1	8/2004	Say et al.
2004/0171921	A1	9/2004	Say et al.
2004/0176672	A1	9/2004	Silver et al.
2004/0186362	A1	9/2004	Brauker et al.
2004/0186365	A1	9/2004	Jin et al.
2004/0193090	A1	9/2004	Lebel et al.
2004/0199059	A1	10/2004	Brauker et al.
2004/0204687	A1	10/2004	Mogensen et al.
2004/0210122	A1	10/2004	Sleburg
2004/0225338	A1	11/2004	Lebel et al.
2004/0236200	A1	11/2004	Say et al.
2004/0236251	A1	11/2004	Roe et al.
2004/0254433	A1	12/2004	Bandis et al.
2004/0254434	A1	12/2004	Goodnow et al.
2004/0267300	A1	12/2004	Mace
2005/0003470	A1	1/2005	Nelson et al.
2005/0004439	A1	1/2005	Shin et al.
2005/0004494	A1	1/2005	Perez et al.
2005/0010269	A1	1/2005	Lebel et al.
2005/0027177	A1	2/2005	Shin et al.
2005/0027180	A1	2/2005	Goode, Jr. et al.
2005/0027462	A1	2/2005	Goode, Jr. et al.
2005/0031689	A1	2/2005	Shults et al.
2005/0038332	A1	2/2005	Saidara et al.
2005/0043598	A1	2/2005	Goode, Jr. et al.
2005/0070819	A1	3/2005	Poux et al.
2005/0085872	A1	4/2005	Yanagihara et al.
2005/0090607	A1	4/2005	Tapsak et al.
2005/0090850	A1	4/2005	Thoes et al.
2005/0101912	A1	5/2005	Faust et al.
2005/0106713	A1	5/2005	Phan et al.
2005/0112169	A1	5/2005	Brauker et al.
2005/0114068	A1	5/2005	Chey et al.
2005/0121322	A1	6/2005	Say et al.
2005/0131346	A1	6/2005	Douglas
2005/0131347	A1	6/2005	Marano-Ford et al.
2005/0143635	A1	6/2005	Kamath et al.
2005/0151976	A1	7/2005	Toma
2005/0154410	A1	7/2005	Conway et al.
2005/0165404	A1	7/2005	Miller
2005/0173245	A1	8/2005	Feldman et al.
2005/0176136	A1	8/2005	Burd et al.
2005/0182306	A1	8/2005	Sloan
2005/0187720	A1	8/2005	Goode, Jr. et al.
2005/0192557	A1	9/2005	Brauker et al.
2005/0195930	A1	9/2005	Spital et al.
2005/0197554	A1	9/2005	Polcha
2005/0199494	A1	9/2005	Say et al.
2005/0203360	A1	9/2005	Brauker et al.
2005/0215871	A1	9/2005	Feldman et al.
2005/0222518	A1	10/2005	Dib
2005/0239154	A1	10/2005	Feldman et al.
2005/0239156	A1	10/2005	Drucker et al.
2005/0241957	A1	11/2005	Mao et al.
2005/0245795	A1	11/2005	Goode, Jr. et al.
2005/0245799	A1	11/2005	Brauker et al.
2005/0245844	A1	11/2005	Mace et al.
2005/0261563	A1	11/2005	Zhou et al.
2005/0267325	A1	12/2005	Bouchier et al.
2005/0277164	A1	12/2005	Drucker et al.
2005/0283208	A1	12/2005	Von Arx et al.
2005/0283209	A1	12/2005	Katoozi et al.

(56) **References Cited**

U.S. PATENT DOCUMENTS

2005/0287620 A1 12/2005 Heller et al.
2006/0001538 A1 1/2006 Kraft et al.
2006/0001551 A1 1/2006 Kraft et al.
2006/0004303 A1 1/2006 Weidenhaupt et al.
2006/0009727 A1 1/2006 O'Mahony et al.
2006/0010098 A1 1/2006 Goodnow et al.
2006/0015020 A1 1/2006 Neale et al.
2006/0015024 A1 1/2006 Brister et al.
2006/0016700 A1 1/2006 Brister et al.
2006/0019327 A1 1/2006 Brister et al.
2006/0020186 A1 1/2006 Brister et al.
2006/0020187 A1 1/2006 Brister et al.
2006/0020188 A1 1/2006 Kamath et al.
2006/0020189 A1 1/2006 Brister et al.
2006/0020190 A1 1/2006 Kamath et al.
2006/0020191 A1 1/2006 Brister et al.
2006/0020192 A1 1/2006 Brister et al.
2006/0025663 A1 2/2006 Talbot et al.
2006/0036139 A1 2/2006 Brister et al.
2006/0036140 A1 2/2006 Brister et al.
2006/0036141 A1 2/2006 Kamath et al.
2006/0036142 A1 2/2006 Brister et al.
2006/0036143 A1 2/2006 Brister et al.
2006/0036144 A1 2/2006 Brister et al.
2006/0036145 A1 2/2006 Brister et al.
2006/0047220 A1 3/2006 Sakata et al.
2006/0129173 A1 6/2006 Wilkinson
2006/0155210 A1 7/2006 Beckman et al.
2006/0155317 A1 7/2006 List
2006/0166629 A1 7/2006 Reggiardo
2006/0173444 A1 8/2006 Choy et al.
2006/0189863 A1 8/2006 Peyser et al.
2006/0189939 A1 8/2006 Gonnelli et al.
2006/0195029 A1 8/2006 Shults et al.
2006/0200181 A1 9/2006 Fukuzawa et al.
2006/0200970 A1 9/2006 Brister et al.
2006/0222566 A1 10/2006 Brauker et al.
2006/0226985 A1 10/2006 Goodnow et al.
2006/0247508 A1 11/2006 Fennell
2006/0253086 A1 11/2006 Moberg et al.
2006/0258929 A1 11/2006 Goode, Jr. et al.
2006/0264888 A1 11/2006 Moberg et al.
2006/0276724 A1 12/2006 Freeman et al.
2006/0276771 A1 12/2006 Galley et al.
2006/0287591 A1 12/2006 Ocvirk et al.
2007/0016381 A1 1/2007 Kamath et al.
2007/0027381 A1 2/2007 Stafford
2007/0032706 A1 2/2007 Kamath et al.
2007/0038044 A1 2/2007 Dobbles et al.
2007/0060814 A1 3/2007 Stafford
2007/0073129 A1 3/2007 Shah et al.
2007/0078320 A1 4/2007 Stafford
2007/0078321 A1 4/2007 Mazza et al.
2007/0078322 A1 4/2007 Stafford
2007/0088377 A1 4/2007 Levaughn et al.
2007/0106135 A1 5/2007 Sloan et al.
2007/0110124 A1 5/2007 Zaragoza et al.
2007/0123819 A1 5/2007 Mernoe et al.
2007/0149875 A1 6/2007 Ouyang et al.
2007/0163880 A1 7/2007 Woo et al.
2007/0173706 A1 7/2007 Neinast et al.
2007/0173741 A1 7/2007 Deshmukh et al.
2007/0191701 A1 8/2007 Feldman et al.
2007/0203407 A1 8/2007 Hoss et al.
2007/0203966 A1 8/2007 Brauker et al.
2007/0208246 A1 9/2007 Brauker et al.
2007/0235331 A1 10/2007 Simpson et al.
2007/0244368 A1 10/2007 Bayloff et al.
2007/0244398 A1 10/2007 Lo et al.
2007/0249922 A1 10/2007 Peyser et al.
2007/0255116 A1 11/2007 Mehta et al.
2008/0004512 A1 1/2008 Funderbunk et al.
2008/0004573 A1 1/2008 Kaufmann et al.
2008/0009692 A1 1/2008 Stafford
2008/0009805 A1 1/2008 Ethelfeld
2008/0017522 A1 1/2008 Heller et al.
2008/0021666 A1 1/2008 Goode, Jr. et al.
2008/0027474 A1 1/2008 Curry et al.
2008/0029391 A1 2/2008 Mao et al.
2008/0031941 A1 2/2008 Pettersson
2008/0033254 A1 2/2008 Kamath et al.
2008/0033268 A1 2/2008 Stafford
2008/0033318 A1 2/2008 Mace et al.
2008/0039702 A1 2/2008 Hayter et al.
2008/0045824 A1 2/2008 Tapsak et al.
2008/0058830 A1* 3/2008 Cole A61F 2/1664 606/107
2008/0064937 A1 3/2008 McGarraugh et al.
2008/0064941 A1 3/2008 Funderbunk et al.
2008/0064944 A1 3/2008 Van Antwerp et al.
2008/0065646 A1 3/2008 Zhang et al.
2008/0071156 A1 3/2008 Brister et al.
2008/0083617 A1 4/2008 Simpson et al.
2008/0086042 A1 4/2008 Brister et al.
2008/0086044 A1 4/2008 Brister et al.
2008/0086273 A1 4/2008 Shults et al.
2008/0097246 A1 4/2008 Stafford
2008/0011971 A1 5/2008 Reggiardo et al.
2008/0108942 A1 5/2008 Brister et al.
2008/0112848 A1 5/2008 Huffstodt et al.
2008/0114280 A1 5/2008 Stafford
2008/0119707 A1 5/2008 Stafford
2008/0133702 A1 6/2008 Sharma et al.
2008/0161664 A1 7/2008 Mastrototaro et al.
2008/0167578 A1 7/2008 Bryer et al.
2008/0183061 A1 7/2008 Goode, Jr. et al.
2008/0183399 A1 7/2008 Goode, Jr. et al.
2008/0188731 A1 8/2008 Brister et al.
2008/0189051 A1 8/2008 Goode, Jr. et al.
2008/0194935 A1 8/2008 Brister et al.
2008/0194936 A1 8/2008 Goode, Jr. et al.
2008/0194937 A1 8/2008 Goode, Jr. et al.
2008/0194938 A1 8/2008 Brister et al.
2008/0195232 A1 8/2008 Carr-Brendel et al.
2008/0195967 A1 8/2008 Goode, Jr. et al.
2008/0197024 A1 8/2008 Simpson et al.
2008/0200788 A1 8/2008 Brister et al.
2008/0200789 A1 8/2008 Brister et al.
2008/0200791 A1 8/2008 Simpson et al.
2008/0200897 A1 8/2008 Hoss et al.
2008/0208025 A1 8/2008 Shults et al.
2008/0214481 A1 9/2008 Challoner et al.
2008/0214915 A1 9/2008 Brister et al.
2008/0214918 A1 9/2008 Brister et al.
2008/0228051 A1 9/2008 Shults et al.
2008/0228054 A1 9/2008 Shults et al.
2008/0242961 A1 10/2008 Brister et al.
2008/0255440 A1 10/2008 Eilerson et al.
2008/0262469 A1 10/2008 Brister et al.
2008/0269673 A1 10/2008 Butoi et al.
2008/0275313 A1 11/2008 Brister et al.
2008/0278333 A1 11/2008 Fennell et al.
2008/0283396 A1 11/2008 Wang et al.
2008/0287764 A1 11/2008 Rasdal et al.
2008/0287765 A1 11/2008 Rasdal et al.
2008/0287766 A1 11/2008 Rasdal et al.
2008/0294096 A1 11/2008 Uber et al.
2008/0296155 A1 12/2008 Shults et al.
2008/0300476 A1 12/2008 Stafford
2008/0306368 A1 12/2008 Goode, Jr. et al.
2008/0306434 A1 12/2008 Dobbles et al.
2008/0306435 A1 12/2008 Kamath et al.
2008/0306444 A1 12/2008 Brister et al.
2009/0005666 A1 1/2009 Shin et al.
2009/0006034 A1 1/2009 Hayter et al.
2009/0012379 A1 1/2009 Goode, Jr. et al.
2009/0018424 A1 1/2009 Kamath et al.
2009/0030294 A1 1/2009 Petisce et al.
2009/0036758 A1 2/2009 Brauker et al.
2009/0036763 A1 2/2009 Brauker et al.
2009/0036915 A1 2/2009 Karbowniczek et al.
2009/0043181 A1 2/2009 Brauker et al.
2009/0043182 A1 2/2009 Brauker et al.
2009/0043525 A1 2/2009 Brauker et al.

(56) **References Cited**

U.S. PATENT DOCUMENTS

2009/0043541 A1 2/2009 Brauker et al.
2009/0043542 A1 2/2009 Brauker et al.
2009/0045055 A1 2/2009 Rhodes et al.
2009/0054737 A1 2/2009 Magar et al.
2009/0054866 A1 2/2009 Teisen-Simony et al.
2009/0062633 A1 3/2009 Brauker et al.
2009/0062635 A1 3/2009 Brauker et al.
2009/0069658 A1 3/2009 Say et al.
2009/0076356 A1 3/2009 Simpson et al.
2009/0076359 A1 3/2009 Peyser
2009/0076360 A1 3/2009 Brister et al.
2009/0076361 A1 3/2009 Kamath et al.
2009/0082693 A1 3/2009 Stafford
2009/0099436 A1 4/2009 Brister et al.
2009/0102678 A1 4/2009 Mazza et al.
2009/0105569 A1 4/2009 Stafford
2009/0112123 A1 4/2009 Freeman et al.
2009/0124877 A1 5/2009 Shariati et al.
2009/0124878 A1 5/2009 Goode et al.
2009/0124879 A1 5/2009 Brister et al.
2009/0124964 A1 5/2009 Leach et al.
2009/0124979 A1 5/2009 Raymond et al.
2009/0131768 A1 5/2009 Simpson et al.
2009/0131769 A1 5/2009 Leach et al.
2009/0131776 A1 5/2009 Simpson et al.
2009/0131777 A1 5/2009 Simpson et al.
2009/0137886 A1 5/2009 Shariati et al.
2009/0137887 A1 5/2009 Shariati et al.
2009/0143659 A1 6/2009 Li et al.
2009/0143660 A1 6/2009 Brister et al.
2009/0150454 A1 6/2009 Gejdos et al.
2009/0156919 A1 6/2009 Brister et al.
2009/0156924 A1 6/2009 Shariati et al.
2009/0163790 A1 6/2009 Brister et al.
2009/0163791 A1 6/2009 Brister et al.
2009/0171182 A1 7/2009 Stafford
2009/0178459 A1 7/2009 Li et al.
2009/0182217 A1 7/2009 Li et al.
2009/0192366 A1 7/2009 Mensinger et al.
2009/0192380 A1 7/2009 Shariati et al.
2009/0192722 A1 7/2009 Shariati et al.
2009/0192724 A1 7/2009 Brauker et al.
2009/0192745 A1 7/2009 Kamath et al.
2009/0192751 A1 7/2009 Kamath et al.
2009/0198215 A1 8/2009 Chong et al.
2009/0203981 A1 8/2009 Brauker et al.
2009/0204341 A1 8/2009 Brauker et al.
2009/0212766 A1 8/2009 Olson et al.
2009/0216103 A1 8/2009 Brister et al.
2009/0240120 A1 9/2009 Mensinger et al.
2009/0240128 A1 9/2009 Mensinger et al.
2009/0240193 A1 9/2009 Mensinger et al.
2009/0242399 A1 10/2009 Kamath et al.
2009/0242425 A1 10/2009 Kamath et al.
2009/0247855 A1 10/2009 Boock et al.
2009/0247856 A1 10/2009 Boock et al.
2009/0259201 A1 10/2009 Hwang et al.
2009/0259202 A1 10/2009 Leeflang et al.
2009/0270765 A1 10/2009 Ghesquire et al.
2009/0287073 A1 11/2009 Boock et al.
2009/0287074 A1 11/2009 Shults et al.
2009/0292184 A1 11/2009 Funderburk et al.
2009/0292185 A1 11/2009 Funderburk et al.
2009/0299152 A1 12/2009 Taub et al.
2009/0299155 A1 12/2009 Yang et al.
2009/0299156 A1 12/2009 Simpson et al.
2009/0299162 A1 12/2009 Brauker et al.
2009/0299276 A1 12/2009 Brauker et al.
2009/0299301 A1 12/2009 Gottleib et al.
2010/0010324 A1 1/2010 Brauker et al.
2010/0010331 A1 1/2010 Brauker et al.
2010/0010332 A1 1/2010 Brauker et al.
2010/0016687 A1 1/2010 Brauker et al.
2010/0016698 A1 1/2010 Rasdal et al.
2010/0022855 A1 1/2010 Brauker et al.
2010/0022863 A1 1/2010 Mogensen et al.
2010/0030038 A1 2/2010 Brauker et al.
2010/0030053 A1 2/2010 Goode, Jr. et al.
2010/0030111 A1 2/2010 Perriere
2010/0030484 A1 2/2010 Brauker et al.
2010/0030485 A1 2/2010 Brauker et al.
2010/0036215 A1 2/2010 Goode, Jr. et al.
2010/0036216 A1 2/2010 Goode, Jr. et al.
2010/0036222 A1 2/2010 Goode, Jr. et al.
2010/0036223 A1 2/2010 Goode, Jr. et al.
2010/0036225 A1 2/2010 Goode, Jr. et al.
2010/0036281 A1 2/2010 Doi
2010/0041971 A1 2/2010 Goode, Jr. et al.
2010/0045465 A1 2/2010 Brauker et al.
2010/0049014 A1 2/2010 Funderburk et al.
2010/0049024 A1 2/2010 Saint et al.
2010/0063373 A1 3/2010 Kamath et al.
2010/0069728 A1 3/2010 Funderburk et al.
2010/0076283 A1 3/2010 Simpson et al.
2010/0081908 A1 4/2010 Dobbles et al.
2010/0081910 A1 4/2010 Brister et al.
2010/0087724 A1 4/2010 Brauker et al.
2010/0096259 A1 4/2010 Zhang et al.
2010/0099970 A1 4/2010 Shults et al.
2010/0099971 A1 4/2010 Shults et al.
2010/0100113 A1 4/2010 Iio et al.
2010/0106088 A1 4/2010 Yodfat et al.
2010/0119693 A1 5/2010 Tapsak et al.
2010/0121169 A1 5/2010 Petisce et al.
2010/0137695 A1* 6/2010 Yodfat A61M 5/158
600/345
2010/0168677 A1 7/2010 Gabriel et al.
2010/0174168 A1 7/2010 Goode, Jr. et al.
2010/0191472 A1 7/2010 Doniger et al.
2010/0198034 A1* 8/2010 Thomas C12Q 1/001
600/365
2010/0198314 A1 8/2010 Wei
2010/0230285 A1 9/2010 Hoss et al.
2010/0274515 A1 10/2010 Hoss et al.
2010/0324392 A1 12/2010 Yee et al.
2010/0331647 A1 12/2010 Shah et al.
2011/0021889 A1 1/2011 Hoss et al.
2011/0046456 A1 2/2011 Hordum et al.
2011/0082484 A1 4/2011 Saravia et al.
2011/0106126 A1 5/2011 Love et al.
2011/0257521 A1 10/2011 Fraden
2011/0288574 A1 11/2011 Curry et al.
2011/0319729 A1 12/2011 Donnay et al.
2012/0123385 A1 5/2012 Edwards et al.
2012/0184909 A1 7/2012 Gym et al.
2012/0296327 A1 11/2012 Hutchins et al.
2013/0047981 A1 2/2013 Bacon

FOREIGN PATENT DOCUMENTS

EP 0320109 6/1989
EP 0353328 2/1990
EP 0390390 10/1990
EP 0396788 11/1990
EP 0286118 1/1995
EP 1048264 11/2000
EP 1177802 2/2002
EP 1704889 A1 9/2006
EP 2060284 5/2009
EP 2201969 6/2010
GB 2 067 764 B 1/1984
JP 11-506629 6/1999
JP 2004-033438 2/2004
JP 2004-214014 A 7/2004
JP 2004-520103 7/2004
JP 2004-520898 7/2004
WO WO-1991/015993 10/1991
WO WO-1992/013271 8/1992
WO WO-1994/020602 9/1994
WO WO-1996/039977 5/1996
WO WO-1996/025089 8/1996
WO WO-1998/035053 8/1998
WO WO-1998/056293 12/1998
WO WO-1999/033504 7/1999

(56) **References Cited**

FOREIGN PATENT DOCUMENTS

WO	WO-1999/056613		11/1999
WO	WO-2000/049940		8/2000
WO	WO-2000/059370		10/2000
WO	WO-2000/078992		12/2000
WO	WO-2001/052935		7/2001
WO	WO 01/58348	A2	8/2001
WO	WO-2001/054753		8/2001
WO	WO 01/64105	A1	9/2001
WO	WO 02/15778	A1	2/2002
WO	WO-2002/016905		2/2002
WO	WO-2002/050534		6/2002
WO	WO-2002/058537		8/2002
WO	WO-2003/028784		4/2003
WO	WO 03/056319	A2	7/2003
WO	WO-2003/076893		9/2003
WO	WO-2003/082091		10/2003
WO	WO-2004/028337		4/2004
WO	WO 2004/049237	A2	6/2004
WO	WO-2004/060436		7/2004
WO	WO-2004/061420		7/2004
WO	WO-2004/098684		11/2004
WO	WO-2004/112602		12/2004
WO	WO 2005/018450	A2	3/2005
WO	WO-2005/084534		9/2005
WO	WO-2005/089103		9/2005
WO	WO-2006/024671		3/2006
WO	WO 2006/026741	A1	3/2006
WO	WO 2006/040083	A1	4/2006
WO	WO-2006/042811		4/2006
WO	WO 2006/086423	A2	8/2006
WO	WO 2006/094513	A2	9/2006
WO	WO-2006/108809		10/2006
WO	WO 2006/114297	A1	11/2006
WO	WO 2007/097754	A1	8/2007
WO	WO 2008/021913	A2	2/2008
WO	WO 2008/065646		6/2008
WO	WO 2008/115409	A1	9/2008
WO	WO 2008/133702		11/2008
WO	WO 2008/138006	A2	11/2008
WO	WO 2008/157821	A1	12/2008
WO	WO 2009/016638	A1	2/2009
WO	WO-2009/062675		5/2009
WO	WO-2010/112521		10/2010
WO	WO 2010/112521		10/2010
WO	WO 2010/141922	A1	12/2010
WO	WO-2011/002815		1/2011

OTHER PUBLICATIONS

Armour, J.C., et al., "Application of Chronic Intravascular Blood Glucose Sensor in Dogs," Diabetes, vol. 39, pp. 1519-1526, Dec. 1990.

Bindra, D.S. et al., "Design and in Vitro Studies of a Needle-Type Glucose Sensor for Subcutaneous Monitoring," Anal. Chem., 63(17):1692-1696 (Sep. 1, 1991).

Bobbioni-Harsch, E. et al., "Lifespan of subcutaneous glucose sensors and their performances during dynamic glycaemia changes in rats," J. Biomed. Eng. 15:457-463 (1993).

Cass, A.E.G. et al., "Ferrocene-Mediated Enzyme Electrode for Amperometric Determination of Glucose," Anal. Chem., 56(4):667-671 (Apr. 1984).

Gregg, B. A. et al., "Cross-Linked Redox Gels Containing Glucose Oxidase for Amperometric Biosensor Applications," Analytical Chemistry, 62(3):258-263 (Feb. 1, 1990).

Harrison, DJ. et al., "Characterization of Perfluorosulfonic Acid Polymer Coated Enzyme Electrodes and a Miniaturized Integrated Potentiostat for Glucose Analysis in Whole Blood," Anal. Chem., 60 (19):2002-2007 (Oct. 1, 1988).

Heller, A., "Electrical Connection of Enzyme Redox Centers to Electrodes," J. Phys. Chern., 96 (9):3579-3587 (1992).

Heller, A., "Electrical Wiring of Redox Enzymes," Acc. Chem. Res., 23(5):129-134 (1990).

Johnson, K., et al., "In vivo evaluation of an electroenzymatic glucose sensor implanted in subcutaneous tissue," Biosensors and Bioelectronics. 1992, vol. 7, pp. 709-714.

Maidan, R. et al., "Elimination of Electrooxidizable Interferant-Produced Currents in Amperometric Biosensors," Analytical Chemistry, 64(23):2889-2896 (Dec. 1, 1992).

Mastrototaro, J.J., et al., "An Electroenzymatic Glucose Sensor Fabricated on a Flexible Substrate," Sensors and Biosensors B Chemical, B5: 139-144 (1991).

McKean, B., et al., "A Telemetry-Instrumentation System for Chronically Implanted Glucose and Oxygen Sensors," IEEE Transactions on Biomedical Engineering, vol. 35, No. 7, (Jul. 1988), pp. 526-532.

Moatti-Sirat, D., et al., "Towards continuous glucose monitoring: in vivo evaluation of a miniaturized glucose sensor implanted for several days in rat subcutaneous tissue," Diabetologia, 35(3) (1 page—Abstract only) (Mar. 1992).

Ohara, T. J., et al., "Glucose Electrodes Based on Cross-Linked $[Os(bpy)_2Cl]^{+/2+}$ Complexed Poly(1-vinylimadazole) Films," Analytical Chemistry, 65(23):3512-3516 (Dec. 1, 1993).

Opinion of the Court, Supreme Court of the United States, No. 04-1350, *KSR International co.*, Petitioner v. *Teleflex Inc. et al.*, Apr. 30, 2007.

Pickup, J. C., et al., "In vivo molecular sensing in diabetes mellitus: an implantable glucose sensor with direct electron transfer," Diabetologia, 32(3):213-217 (1989).

Pishko, M. V., et al., "Amperometric Glucose Microelectrodes Prepared Through Immobilization of Glucose Oxidase in Redox Hydrogels," Anal. Chem., 63(20):2268-2272 (Oct. 15, 1991).

Poitout, V., et al., "In vitro and in vivo evaluation in dogs of a miniaturized glucose sensor," ASAIO Transactions, 37(3) (1 page—Abstract only) (Jul.-Sep. 1991).

Reach, G., et al., "Can Continuous Glucose Monitoring Be Used for the Treatment of Diabetes?," Analytical Chemistry, 64(6):381-386 (Mar. 15, 1992).

Rebrin, K., et al., "Automated Feedback Control of Subcutaneous Glucose Concentration in Diabetic Dogs," Diabetologia, 32(8):573-576 (Aug. 1989).

Sakakida, M., et al., "Ferrocene-mediate needle-type glucose sensor covered with newly designed biocompatible membrane," Sensors and Actuators B, 13-14:319-322 (1993).

Sakakida, M., et al., "Development of ferrocene-mediated needle-type glucose sensor as a measure of true subcutaneous tissue glucose concentrations", Artif Organs Today. 1992, vol. 2, No. 2, pp. 145-458.

Shichiri, M., et al., "Glycaemic Control in Pancreatectomized Dogs with a Wearable Artificial Endocrine Pancreas," Diabetologia, 24(3):179-184 (Mar. 1983).

Shichiri, M., et al., "Telemetry Glucose Monitoring Device with Needle-type Glucose Sensor: A Useful Tool for Blood Glucose Monitoring in Diabetic Individuals," Diabetes Care, vol. 9, No. 3 (May-Jun. 1986), pp. 298-301.

Shichiri, M., et al., "In vivo characteristics of needle-type glucose sensor—Measurement of subcutaneous glucose concentrations in human volunteers," Horm Metab Res Suppl. 1988, vol. 20, pp. 17-20.

Shichiri, M., et al., "Wearable artificial endocrine pancreas with needle-type glucose sensor," The Lancet, 1982, vol. 2, No. 8308, pp. 1129-1131.

Shults, M., "A Telemetry-Instrumentation System for Monitoring Multiple Subcutaneously Implanted Glucose Sensors," IEEE Transactions on Biomedical Engineering, vol. 41, No. 10 (Oct. 1994), pp. 937-942.

Sternberg, R., et al., "Study and Development of Multilayer Needle-type Enzyme-based Glucose Microsensors," Biosensors, 4:27-40 (1988).

Turner, A.P.F., et al., "Diabetes Mellitus: Biosensors for Research and Management", Biosensors, 1:85-115 (1985).

Updike, S. et al., "Principles of Long-term Fully Implanted Sensors with Emphasis on Radiotelemetric Monitoring of Blood Glucose from Inside a Subcutaneous Foreign Body Capsule (FBC)" in "Biosensors in the Body: Continuous in vivo Monitoring" (John Wiley & Sons, Ltd., 1997) Chapter 4, pp. 117-137.

(56) **References Cited**

OTHER PUBLICATIONS

Velho, G. et al., "Strategies for calibrating a subcutaneous glucose sensor," Biomed. Biochim. Acta, 48 (11112):957-964 (1989).
Wilson, G. S. et al., "Progress toward the Development of an Implantable Sensor for Glucose," Clinical Chemistry, 38(9):1613-1617 (1992).
Ye, L. et al., "High Current Density "Wired" Quinoprotein Glucose Dehydrogenase Electroade," Anal. Chem., 65(3):238-241 (Feb. 1, 1993).
U.S. Patent Reexamination Application No. 90/008,172, Request for Reexamination of U.S. Pat. No. 6,990,366, filed Aug. 16, 2006.
U.S. Patent Reexamination Application No. 90/008,457, Notice of Intent to Issue Reexamination Certificate dated Mar. 13, 2008.
U.S. Patent Reexamination Application No. 90/008,457, Order Granting Request for Reexamination dated Feb. 23, 2007.
U.S. Patent Reexamination Application No. 90/008,457, Request for Reexamination of U.S. Pat. No. 6,990,366 filed Jan. 23, 2007.
U.S. Patent Reexamination Application Nos. 90/009,104 & 90/009,328, Notice of Intent to Issue Reexamination Certificate dated Nov. 20, 2009.
U.S. Patent Reexamination Application Nos. 90/009,104 & 90/009,328, Office Action dated Aug. 4, 2009.
U.S. Patent Reexamination Application Nos. 90/009,104 & 90/009,328, Office Action dated Sep. 30, 2009.
U.S. Patent Reexamination Application No. 90/009,104, Office Action dated Oct. 16, 2008.
U.S. Patent Reexamination Application No. 90/009,104, Order Granting Request for Reexamination dated Jun. 5, 2008.
U.S. Patent Reexamination Application No. 90/009,104, Request for Reexamination of U.S. Pat. No. 6,990,366 filed Apr. 8, 2008.
U.S. Patent Reexamination Application No. 90/009,328, Order Granting Request for Reexamination dated Dec. 9, 2008.
U.S. Patent Reexamination Application No. 90/009,328, Request for Reexamination of U.S. Pat. No. 6,990,366 filed Nov. 10, 2008.
U.S. Patent Reexamination Application No. 90/010,791, Notice of Intent to Issue Reexamination Certificate dated May 17, 2011.
U.S. Patent Reexamination Application No. 90/010,791, Office Action dated Dec. 17, 2010.
U.S. Patent Reexamination Application No. 90/010,791, Office Action dated May 28, 2010.
U.S. Patent Reexamination Application No. 90/010,791, Order Granting Request for Reexamination dated Feb. 22, 2010.
U.S. Patent Reexamination Application No. 90/010,791, Request for Reexamination of U.S. Pat. No. 6,990,366 filed Dec. 22, 2009.
U.S. Patent Reexamination Application No. 90/011,730, Notice of Intent to Issue Reexam Certificate for U.S. Pat. No. 6,990,366 dated Apr. 5, 2012.
U.S. Patent Reexamination Application No. 90/011,730, Office Action dated Jan. 11, 2012.
U.S. Patent Reexamination Application No. 90/011,730, Order Granting Request for Reexamination of U.S. Pat. No. 6,990,366 dated Aug. 24, 2011.
U.S. Patent Reexamination Application No. 90/011,730, Request for Reexamination of U.S. Pat. No. 6,990,366 filed Jun. 3, 2011.
EP, 16176370.1 Extended Search Report, dated Dec. 7, 2016.
JP, 2016-44196 Office Action, dated Apr. 11, 2017.
Aussedat, B., et al., "A User-Friendly Method for Calibrating a Subcutaneous Glucose Sensor-Based Hypoglycemic Alarm", Biosensors & Bioelectronics, vol. 12, No. 11, 1997, pp. 1061-1071.
Australian Patent Application No. 2011230596, Examination Report dated Feb. 28, 2014.
Australian Patent Application No. 2011269796, Examination Report dated Apr. 3, 2014.
Bennion, N., et al., "Alternate Site Glucose Testing: A Crossover Design", Diabetes Technology & Therapeutics, vol. 4, No. 1, 2002, pp. 25-33.
Chinese Patent Application No. 201180002616.7, Original Language and English Translation of Office Action dated Apr. 24, 2014.
Chinese Patent Application No. 201180002617.1, Original Language and English Translation of Office Action dated Jul. 3, 2014.
Claremont, D. J., et al., "Biosensors for Continuous In Vivo Glucose Monitoring", Proceedings of the Annual International Conference of the IEEE Engineering in Medicine and Biology Society, vol. 10, 1988.
Clark Jr., L. C., et al., "Electrode Systems for Continuous Monitoring in Cardiovascular Surgery", Annals New York Academy of Sciences, 1962, pp. 29-45.
Clark Jr., L. C., et al., "Long-term Stability of Electroenzymatic Glucose Sensors Implanted in Mice", American Society of Artificial Internal Organs Transactions, vol. XXXIV, 1988, pp. 259-265.
Csoregi, E., et al., "Design and Optimization of a Selective Subcutaneously Implantable Glucose Electrode Based on 'Wired' Glucose Oxidase", Analytical Chemistry, vol. 67, No. 7, 1995, pp. 1240-1244.
Csoregi, E., et al., "Design, Characterization, and One-Point in Vivo Calibration of a Subcutaneously Implanted Glucose Electrode", Analytical Chemistry, vol. 66 No. 19, 1994, pp. 3131-3138.
European Patent Application No. EP 11760268.0, Extended European Search Report dated Apr. 14, 2014.
Feldman, B., et al., "A Continuous Glucose Sensor Based on Wired Enzyme™ Technology—Results from a 3-Day Trial in Patients with Type 1 Diabetes", Diabetes Technology & Therapeutics, vol. 5, No. 5, 2003, pp. 769-779.
Feldman, B., et al., "Correlation of Glucose Concentrations in Interstitial Fluid and Venous Blood During Periods of Rapid Glucose Change", Abbott Diabetes Care, Inc. Freestyle Navigator Continuous Glucose Monitor Pamphlet, 2004,.
Isermann, R., "Supervision, Fault-Detection and Fault-Diagnosis Methods—An Introduction", Control Engineering Practice, vol. 5, No. 5, 1997, pp. 639-652.
Isermann, R., et al., "Trends in the Application of Model-Based Fault Detection and Diagnosis of Technical Processes", Control Engineering Practice, vol. 5, No. 5, 1997, pp. 709-719.
Johnson, P. C., "Peripheral Circulation", John Wiley & Sons, 1978, pp. 198.
Jungheim, K., et al., "How Rapid Does Glucose Concentration Change in Daily Life of Patients with Type 1 Diabetes?", 2002, pp. 250.
Jungheim, K., et al., "Risky Delay of Hypoglycemia Detection by Glucose Monitoring at the Arm", Diabetes Care, vol. 24, No. 7, 2001, pp. 1303-1304.
Koudelka, M., et al., "In-Vivo Behaviour of Hypodermically Implanted Microfabricated Glucose Sensors", Biosensors & Bioelectronics, vol. 6, 1991, pp. 31-36.
Lager, W., et al., "Implantable Electrocatalytic Glucose Sensor", Hormone Metabolic Research, vol. 26, 1994, pp. 526-530.
Moatti-Sirat, D., et al., "Evaluating In Vitro and In Vivo the Interference of Ascorbate and Acetaminophen on Glucose Detection by a Needle-Type Glucose Sensor", Biosensors & Bioelectronics, vol. 7, 1992, pp. 345-352.
Moatti-Sirat, D., et al., "Reduction of Acetaminophen Interference in Glucose Sensors by a Composite Nafion Membrane: Demonstration in Rats and Man", Diabetologia, vol. 37, 1994, pp. 610-616.
Olievier, C. N., et al., "In Vivo Measurement of Carbon Dioxide Tension with a Miniature Electrodes", Pflugers Archiv: European Journal of Physiology, vol. 373, 1978, pp. 269-272.
Pickup, J,, "Developing Glucose Sensors for In Vivo Use", Tibtech, vol. 11, 1993, pp. 285-291.
Pickup, J., et al., "Implantable Glucose Sensors: Choosing the Appropriate Sensing Strategy", Biosensors, vol. 3, 1987/88, pp. 335-346.
Pickup, J., et al., "Potentially-Implantable, Amperometric Glucose Sensors with Mediated Electron Transfer: Improving the Operating Stability", Biosensors, vol. 4, 1989, pp. 109-119.
Poitout, V., et al., "A Glucose Monitoring System for On Line Estimation in Man of Blood Glucose Concentration Using a Miniaturized Glucose Sensor Implanted in the Subcutaneous Tissue and a Wearable Control Unit", Diabetolgia, vol. 36, 1993, pp. 658-663.
Poitout, V., et al., "Calibration in Dogs of a Subcutaneous Miniaturized Glucose Sensor Using a Glucose Meter for Blood Glucose Determination", Biosensors & Bioelectronics, vol. 7, 1992, pp. 587-592.

(56) **References Cited**

OTHER PUBLICATIONS

Quinn, C. P., et al., "Kinetics of Glucose Delivery to Subcutaneous Tissue in Rats Measured with 0.3-mm Amperometric Microsensors", The American Physiological Society, 1995, E155-E161.
Roe, J. N., et al., "Bloodless Glucose Measurements", Critical Review in Therapeutic Drug Carrier Systems, vol. 15, Issue 3, 1998, pp. 199-241.
Salehi, C., et al., "A Telemetry-Instrumentation System for Long-Term Implantable Glucose and Oxygen Sensors", Analytical Letters, vol. 29, No. 13, 1996, pp. 2289-2308.
Scheller, F., et al., "Enzyme Electrodes and Their Application", Philosophical Transactions of The Royal Society of London B, vol. 316, 1987, pp. 85-94.
Schmidt, F. J., et al., "Calibration of a Wearable Glucose Sensor", The International Journal of Artificial Organs, vol. 15, No. 1, 1992, pp. 55-61.
Schmidtke, D. W., et al., "Measurement and Modeling of the Transient Difference Between Blood and Subcutaneous Glucose Concentrations in the Rat After Injection of Insulin", Proceedings of the National Academy of Sciences, vol. 95, 1998, pp. 294-299.
Shaw, G. W., et al., "In Vitro Testing of a Simply Constructed, Highly Stable Glucose Sensor Suitable for Implantation in Diabetic Patients", Biosensors & Bioelectronics, vol. 6, 1991, pp. 401-406.
Shichiri, M., et al., "Membrane Design for Extending the Long-Life of an Implantable Glucose Sensor", Diabetes Nutrition and Metabolism, vol. 2, 1989, pp. 309-313.
Shichiri, M., et al., "Needle-type Glucose Sensor for Wearable Artificial Endocrine Pancreas", Implantable Sensors for Closed-Loop Prosthetic Systems, Chapter 15, 1985, pp. 197-210.
Thompson, M., et al., "In Vivo Probes: Problems and Perspectives", Clinical Biochemistry, vol. 19, 1986, pp. 255-261.
Velho, G., et al., "In Vitro and In Vivo Stability of Electrode Potentials in Needle-Type Glucose Sensors", Diabetes, vol. 38, No. 2, 1989, pp. 164-171.
Von Woedtke, T., et al., "In Situ Calibration of Implanted Electrochemical Glucose Sensors", *Biomedica Biochimica Acta*, vol. 48, 1989, pp. 943-952.
PCT Application No. PCT/US2011/029881, International Search Report and Written Opinion of the International Searching Authority dated May 20, 2011.
PCT Application No. PCT/US2011/029883, International Search Report and Written Opinion of the International Searching Authority dated Jun. 2, 2011.
PCT Application No. PCT/US2011/029884, International Search Report and Written Opinion of the International Searching Authority dated Jun. 1, 2011.
PCT Application No. PCT/US2010/022860, International Preliminary Report on Patentability and Written Opinion of the International Searching Authority dated Aug. 18, 2011.
PCT Application No. PCT/US2010/047381, International Preliminary Report on Patentability and Written Opinion of the International Searching Authority dated Mar. 15, 2012.
PCT Application No. PCT/US2010/050772, International Preliminary Report on Patentability and Written Opinion of the International Searching Authority dated Apr. 12, 2012.
PCT Application No. PCT/US2010/050888, International Preliminary Report on Patentability and Written Opinion of the International Searching Authority dated Apr. 12, 2012.
PCT Application No. PCT/US2010/051861, International Preliminary Report on Patentability and Written Opinion of the International Searching Authority dated Apr. 19, 2012.
EP, 20195922.8 Extended Search Report, dated Dec. 16, 2020.
Ambade, V. N., et al., "Methods for Estimation of Blood Glucose: A Comparative Evaluation", Medical Journal Armed Forces India, 1998, vol. 54, No. 2, pp. 131-133.
ASTM International, Designation D2240-05, 2010, pp. 1-13.
Biosensors: Fundamentals and Applications, Turner et al., Eds., 1987, pp. 1-786.
Bluetooth Core Specification 4.0, Jun. 30, 2010, Master Table of Contents & Compliance Requirements, pp. 1-89.
Clarke, W., et al., "Statistical Tools to Analyze Continuous Glucose Monitor Data", Diabetes Technology & Therapeutics, 2009, vol. 11, Suppl. 1, pp. S-45-S-54.
In Vivo Glucose Sensing, Cunningham et al., Eds., 2010, Chemical Analysis, vol. 174, pp. 1-466.
Decuir, J., "Bluetooth 4.0: Low Energy", IEEE SCV Consultants' Network of Silicon Valley, 2012, pp. 1-68.
Dementyev, A., et al., "Power Consumption Analysis of Bluetooth Low Energy, ZigBee and ANT Sensor Nodes in a Cyclic Sleep Scenario", IEEE International Wireless Symposium (IWS), 2013, Beijing, China, pp. 1-4.
DexCom™ STS™ Continuous Glucose Monitoring System User's Guide, 2006, pp. 1-57.
Dexcom STS®-7 Continuous Glucose Monitoring System User's Guide, 2007, pp. 1-74.
ECMA International Standard ECMA-340, Near Field Communication Interface and Protocol (NFCIP-1), 2nd Edition, 2004, pp. 1-65.
Facchinetti, A., et al., "A New Index to Optimally Design and Compare Continuous Glucose Monitoring Glucose Prediction Algorithms", Diabetes Technology & Therapeutics, 2011, vol. 13, No. 2, pp. 111-119.
Fujipoly Silver ZEBRA® Connector Data Sheet FSDS 01-34, Version 5, 2006, pp. 1-7.
Gilligan, B. J., et al., "Evaluation of a Subcutaneous Glucose Sensor out to 3 Months in a Dog Model", Diabetes Care, 1994, vol. 17, No. 8, pp. 882-887.
Guerra, S., et al., "A Dynamic Risk Measure from Continuous Glucose Monitoring Data", Diabetes Technology & Therapeutics, 2011, vol. 13, No. 8, pp. 843-852.
Heise, T., et al., "Hypoglycemia Warning Signal and Glucose Sensors: Requirements and Concepts", Diabetes Technology & Therapeutics, 2003, vol. 5, No. 4, pp. 563-571.
Heller, A., "Implanted Electrochemical Glucose Sensors for the Management of Diabetes", Annnu. Rev. Biomed. Eng., 1999, vol. 1, pp. 153-175.
"In Vitro Diagnostic Products for Human Use", Federal Register, 1974, vol. 39, No. 126, pp. 24136-24147.
Klonoff, D. C., "A Review of Continuous Glucose Monitoring Technology", Diabetes Technology & Therapeutics, 2005, vol. 7, No. 5, pp. 770-775.
León, L. P., et al., "Continuous-Flow Analysis for Glucose in Serum, with Use of Hexokinase and Glucose-6-Phosphate Dehydrogenase Co-Immobilized in Tubular Form", Clinical Chemistry, 1980, vol. 26, No. 1, pp. 123-129.
Morak, J., et al., "Design and Evaluation of a Telemonitoring Concept Based on NFC-Enabled Mobile Phones and Sensor Devices", IEEE Transactions on Information Technology in Biomedicine. 2012, vol. 16, No. 1, pp. 17-23.
Movassaghi, S., et al., "Wireless Technologies for Body Area Networks: Characteristics and Challenges", 2012 International Symposium on Communications and Information Technologies (ISCIT), 2012, Gold Coast, QLD, Australia, pp. 42-47.
Passey, R. B., et al., "Evaluation and Comparison of 10 Glucose Methods and the Reference Method Recommendation in the Proposed Product Class Standard (1974)", Clinical Chemistry, 1977, vol. 23, No. 1, pp. 131-139.
Sandham, W., et al., "Blood Glucose Prediction for Diabetes Therapy Using a Recurrent Artificial Neural Network", 9th European Signal Processing Conference, 1998, Rhodes, Greece, pp. 1-4.
Sparacino, G., et al., "Glucose Concentration Can Be Predicted Ahead in Time from Continuous Glucose Monitoring Sensor Time-Series", IEEE Transactions on Biomedical Engineering, 2007, vol. 54, No. 5, pp. 931-937.
Townsend, K., et al., "Getting Started with Bluetooth Low Energy—Chapter 1", 2014, pp. 1-26.
U.S. Appl. No. 60/587,787, filed Jul. 13, 2004, pp. 1-69.
U.S. Appl. No. 60/606,334, filed Aug. 31, 2004, pp. 1-38.
Wang, X.H., et al., "Bluetooth: Opening a blue sky for healthcare", Mobile Information Systems, 2006, vol. 2, pp. 151-167.
Z-Carbon Connector, retrieved from http://www.zaxisconnector.com/SS_zc.shtml, 2004, 2 pages.

(56) **References Cited**

OTHER PUBLICATIONS

Z-Silver Connector, retrieved from http://www.zaxisconnector.com/SS_zs.shtml, 2004, 2 pages.

* cited by examiner

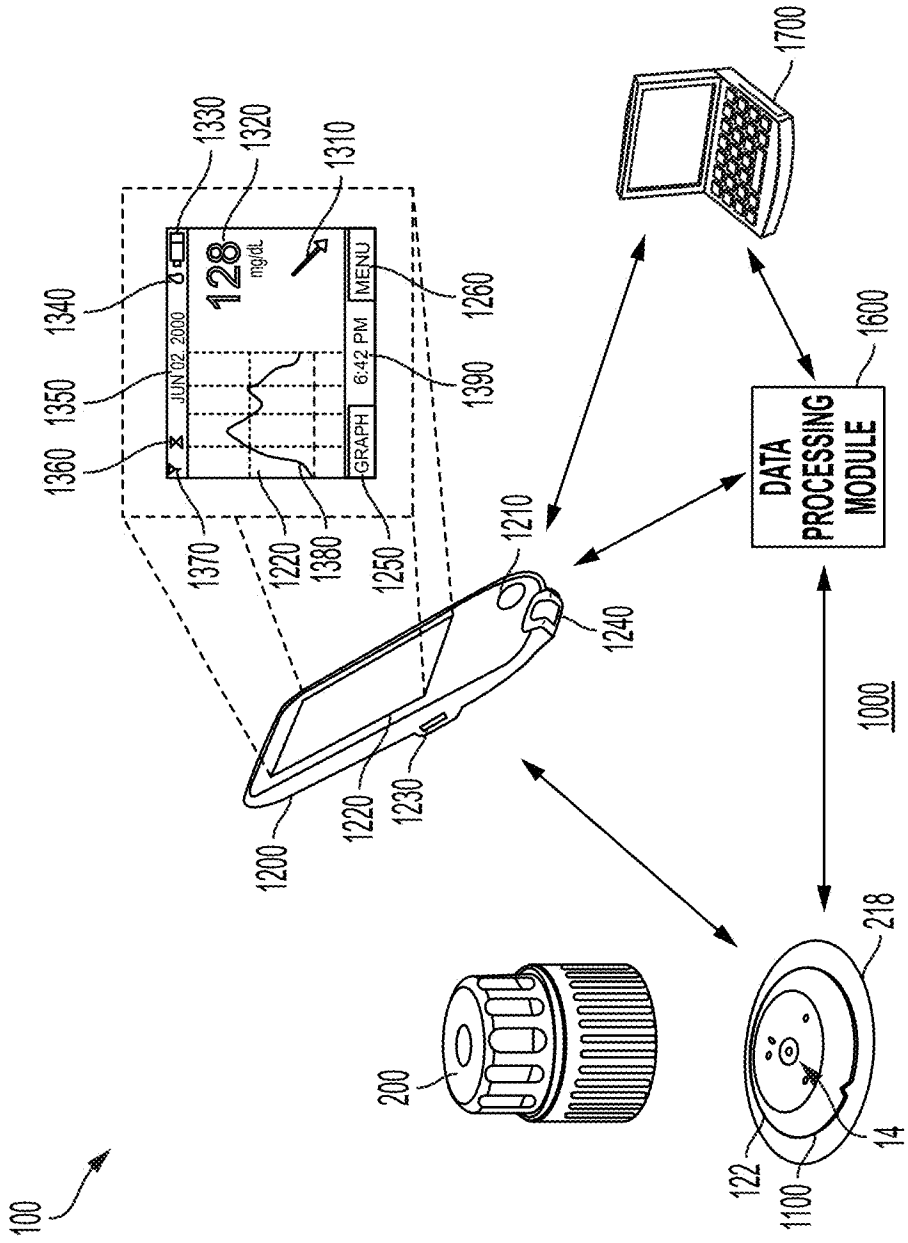
100
200
1100
122
14
218
1000
1200
1220
1230
1240
1210
1370
1220
1380
1250
1360
1350
1340
1330
1320
1310
128
mg/dL
JUN 02, 2000
GRAPH
6:42 PM
MENU
1390
1260
1700
1600
DATA PROCESSING MODULE

FIG. 1

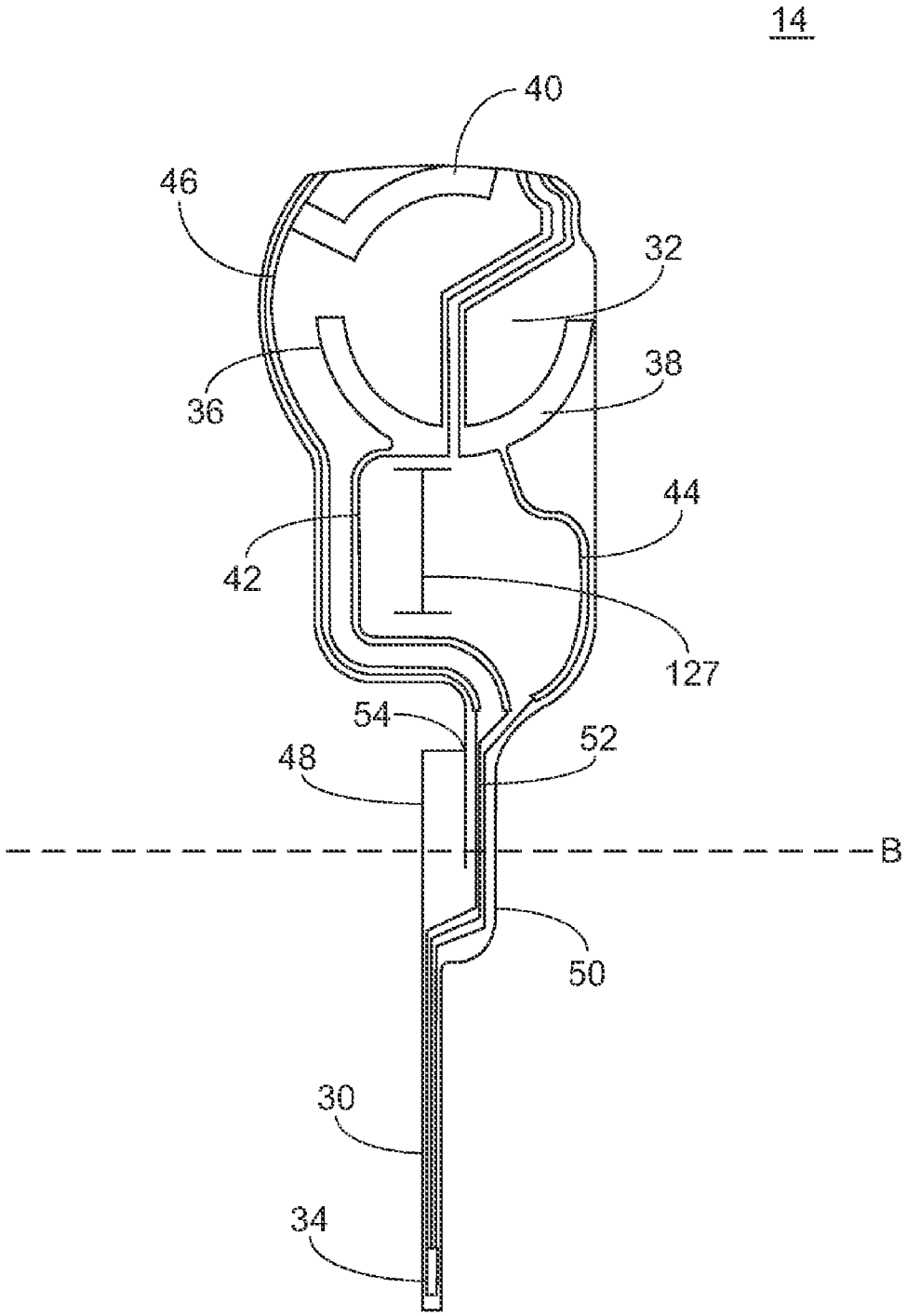

FIG. 2

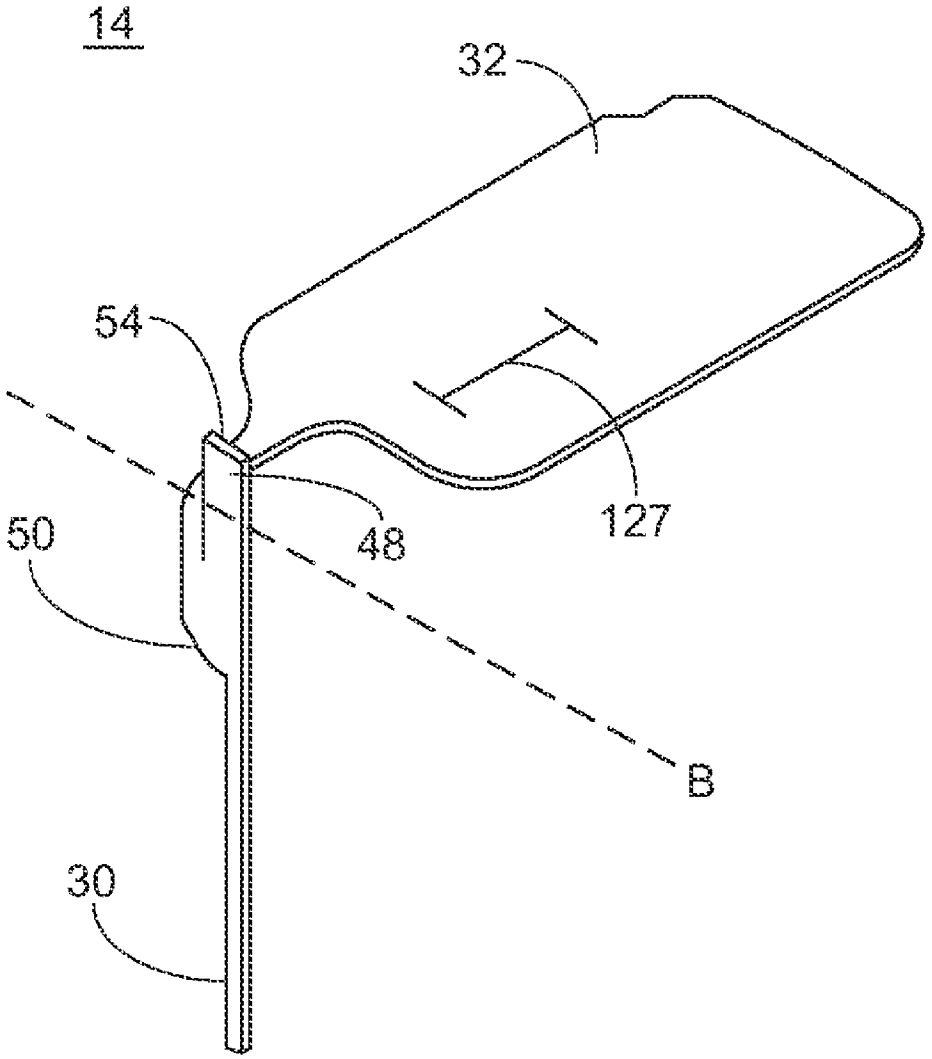

FIG. 3

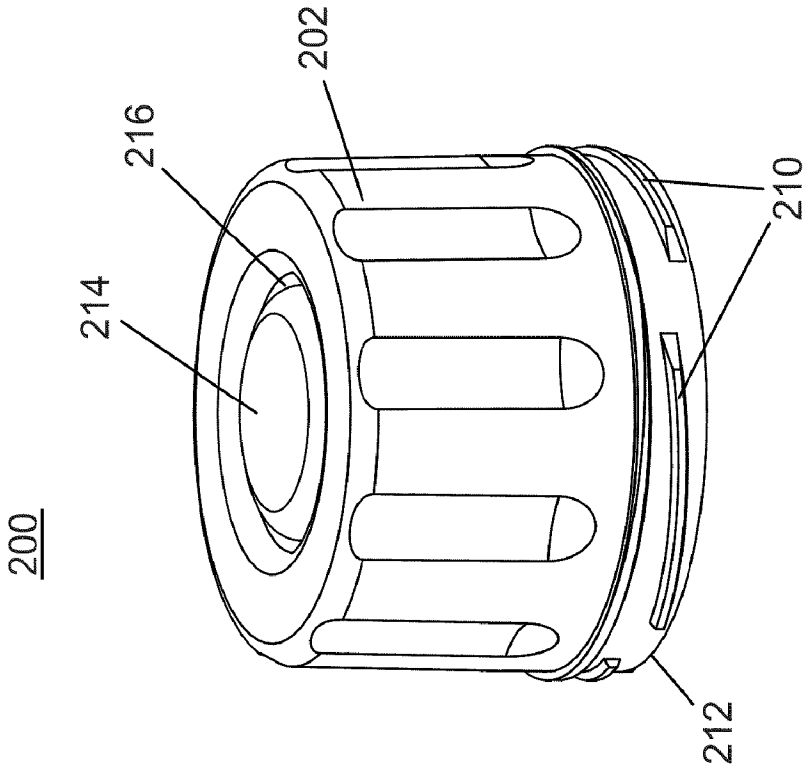

FIG. 5

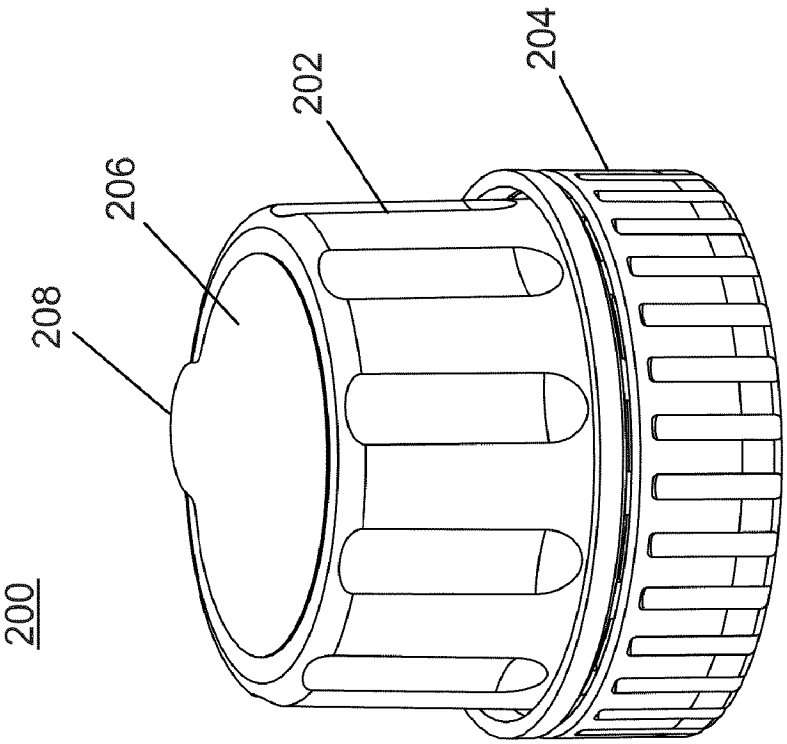

FIG. 4

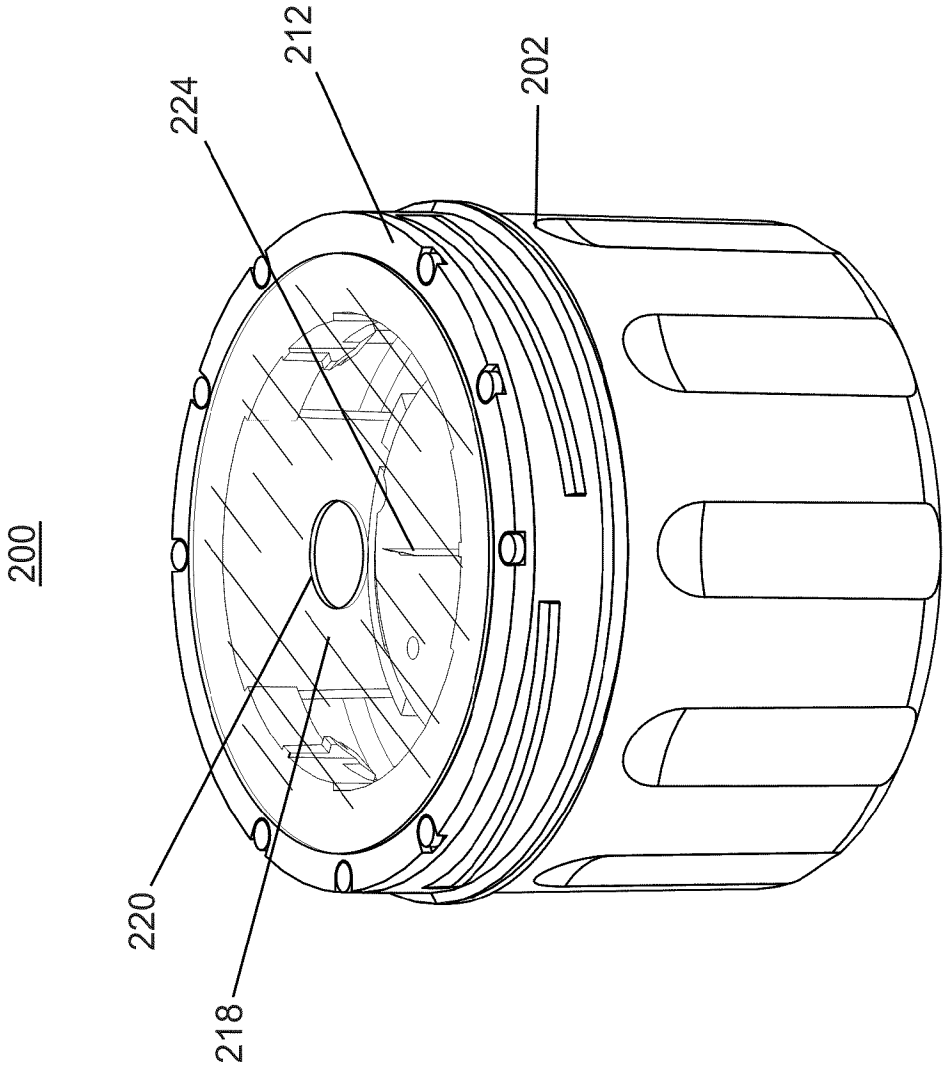

FIG. 6

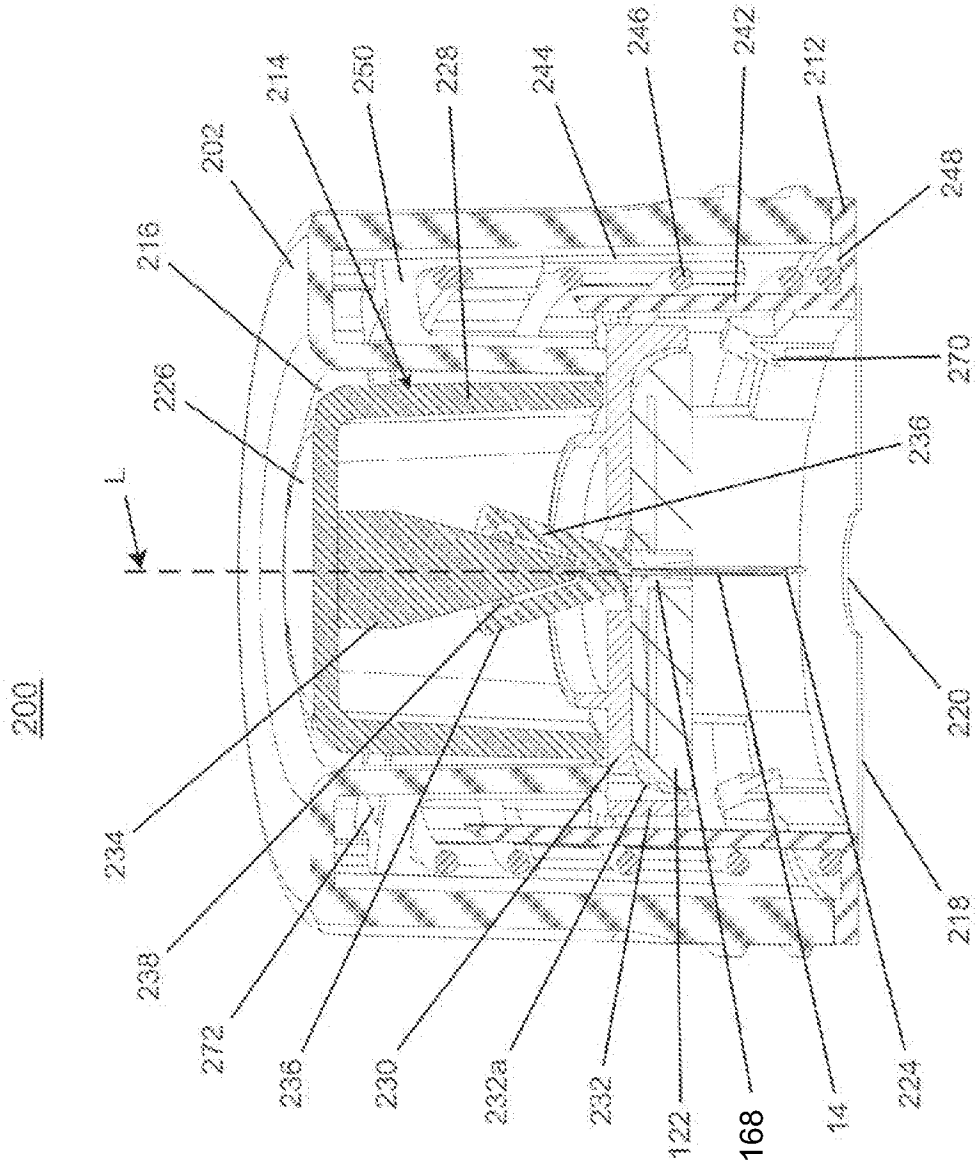
200
L
234
238
272
236
230
232a
232
122
168
14
224
218
220
236
226
216
202
214
250
228
244
246
242
212
248
270

FIG. 7

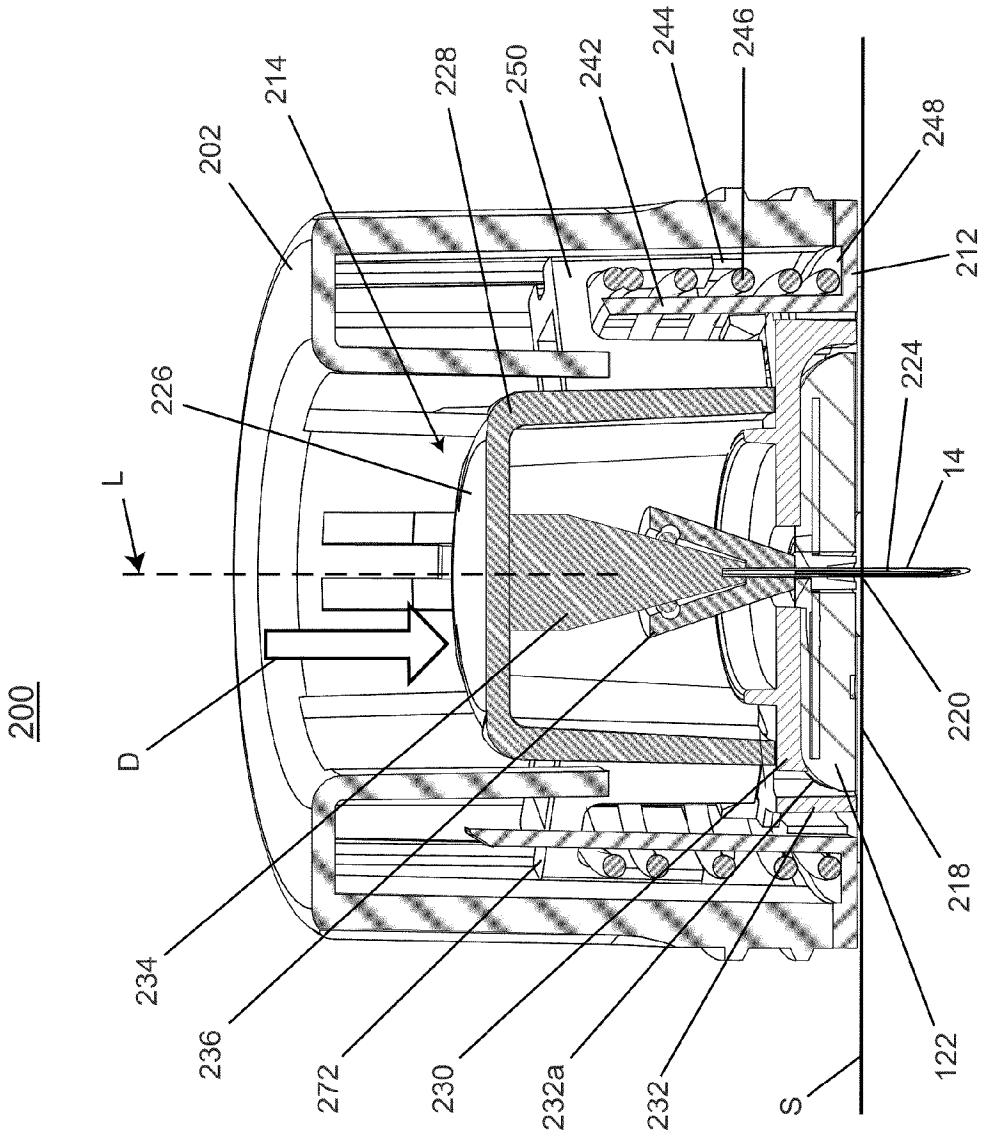
200
D
L
202
214
226
228
250
242
244
246
248
212
224
14
220
218
122
S
232
232a
230
272
236
234

FIG. 8

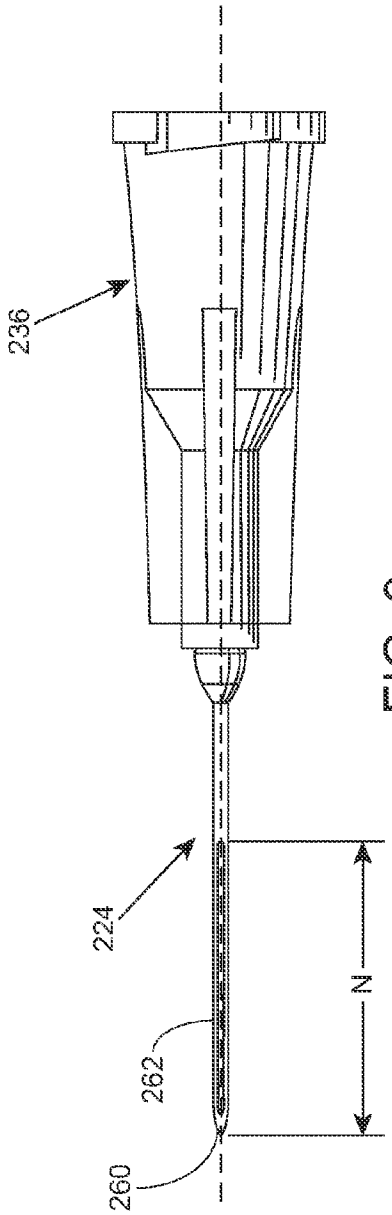

FIG. 9

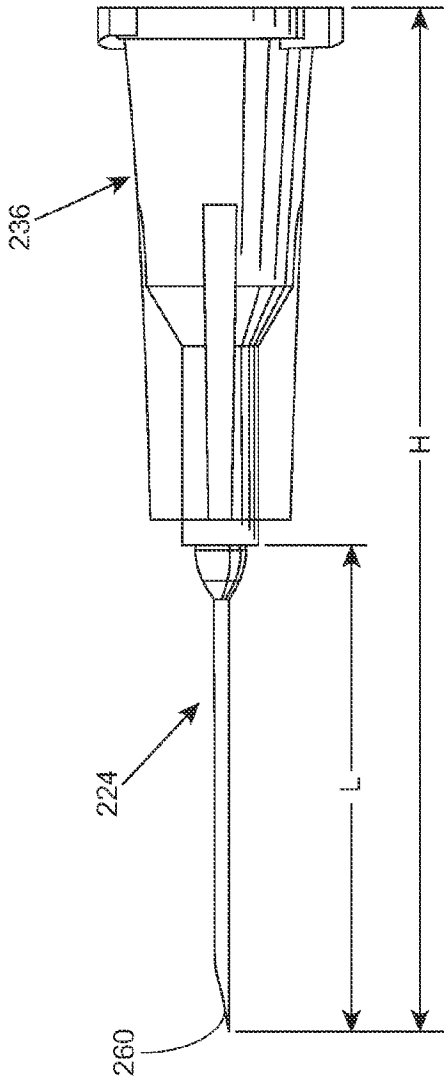

FIG. 10

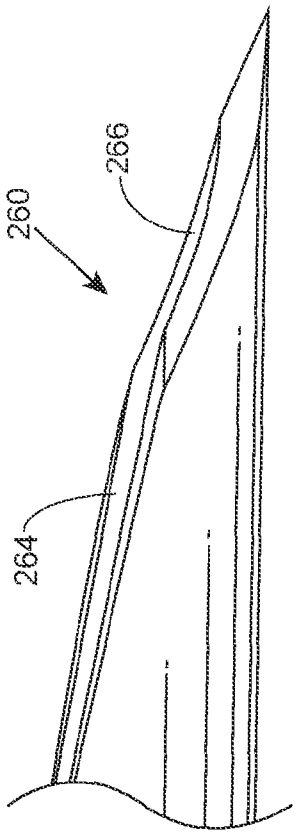

FIG. 12

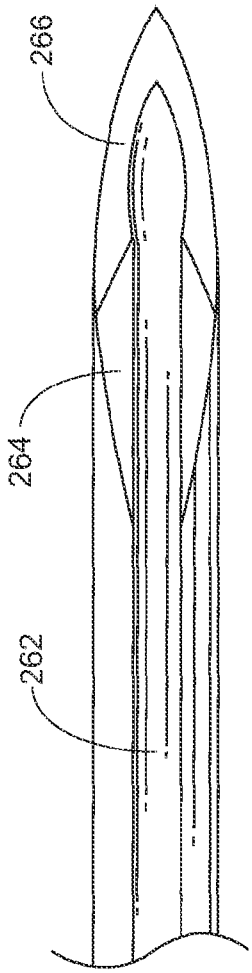

FIG. 13

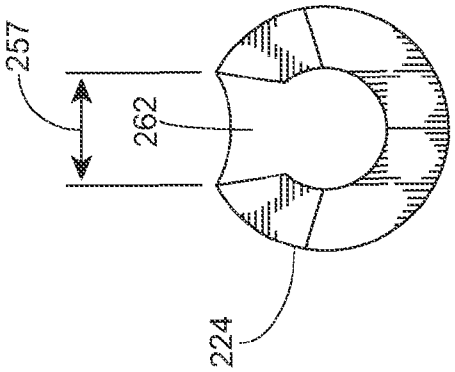

FIG. 11

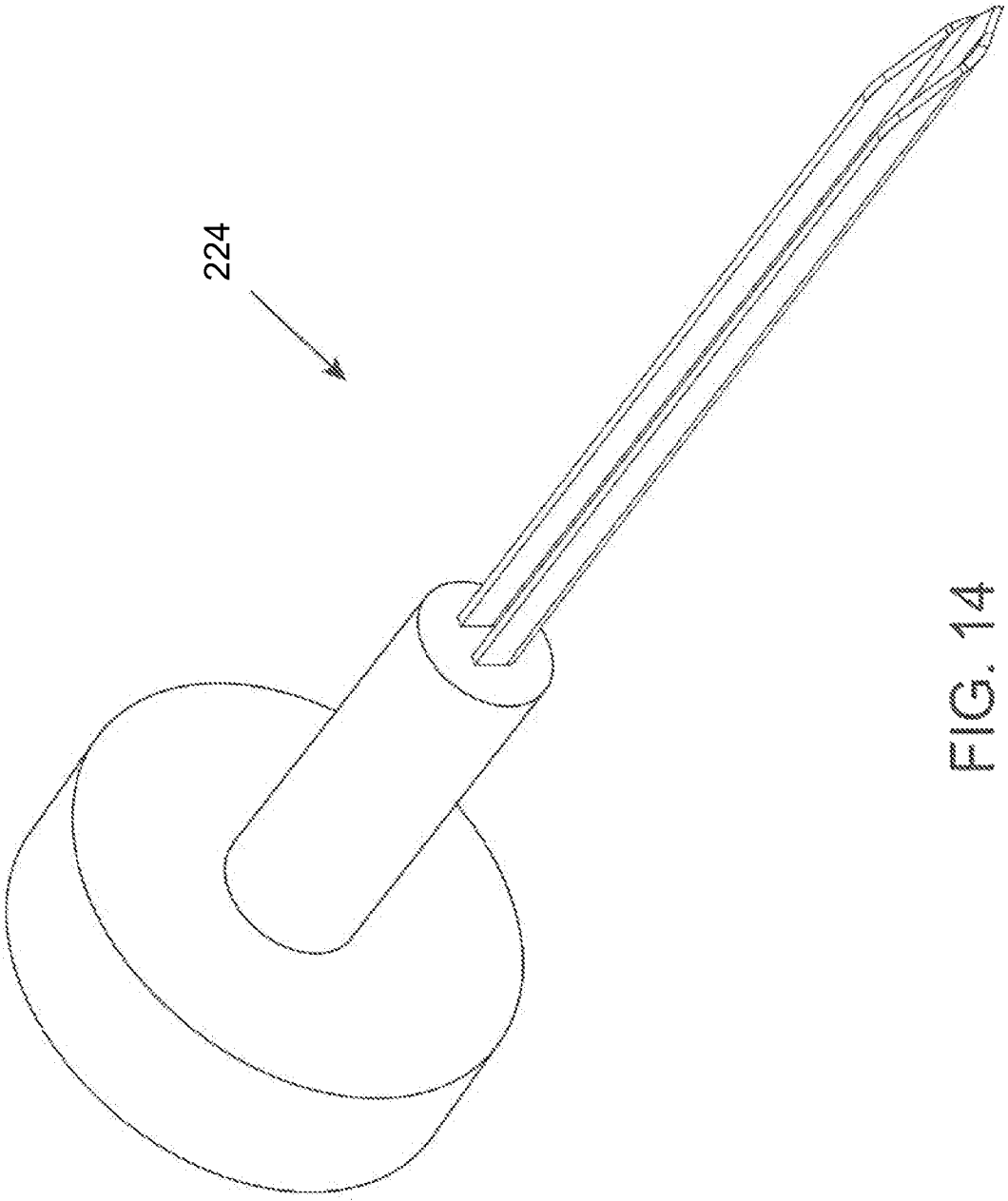

FIG. 14

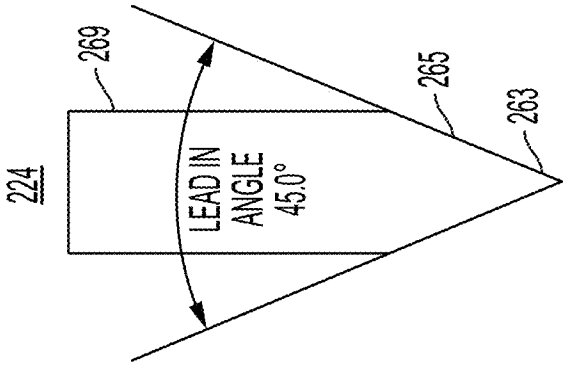

FIG. 14B

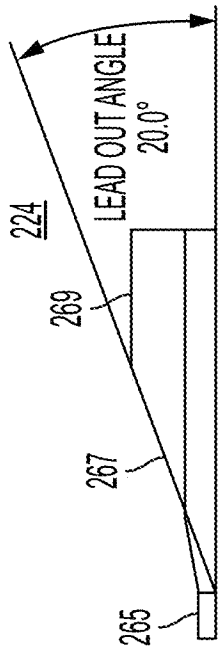

FIG. 14C

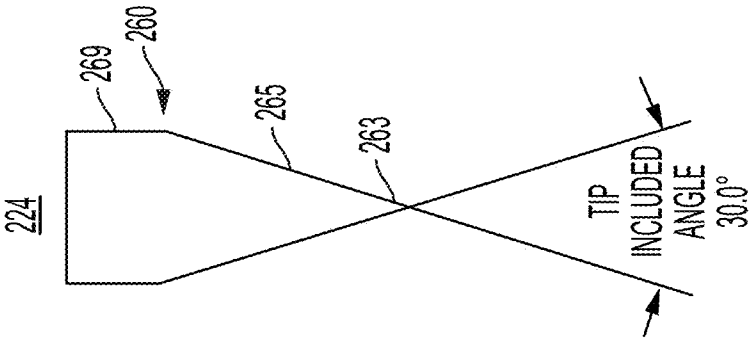

FIG. 14A

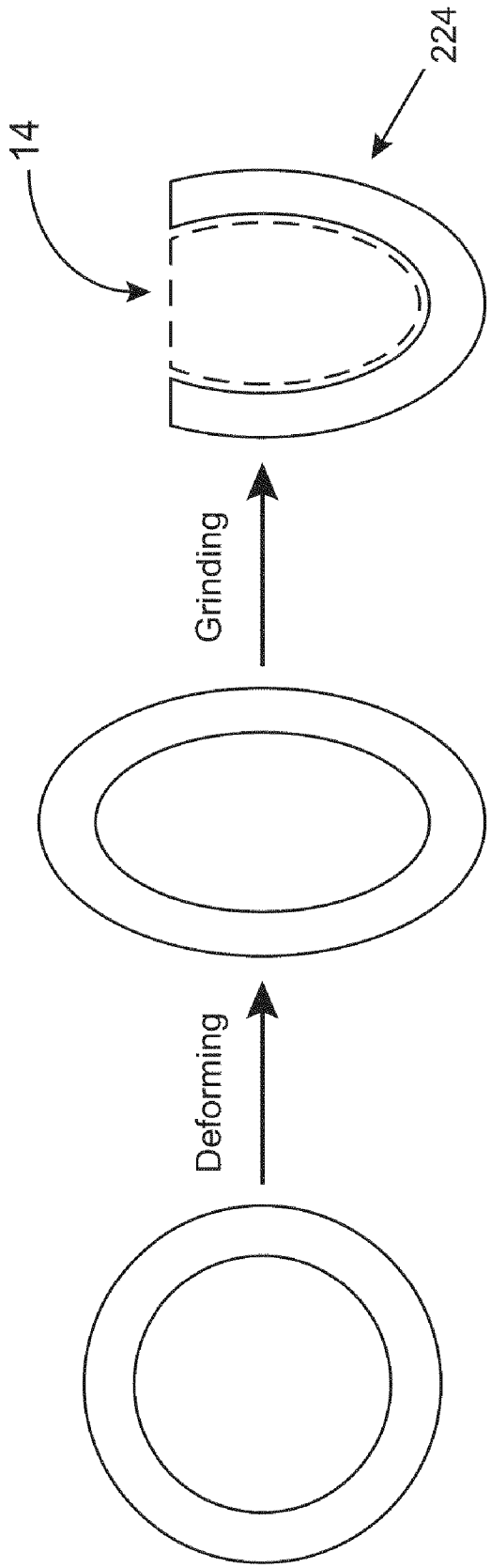

FIG. 15

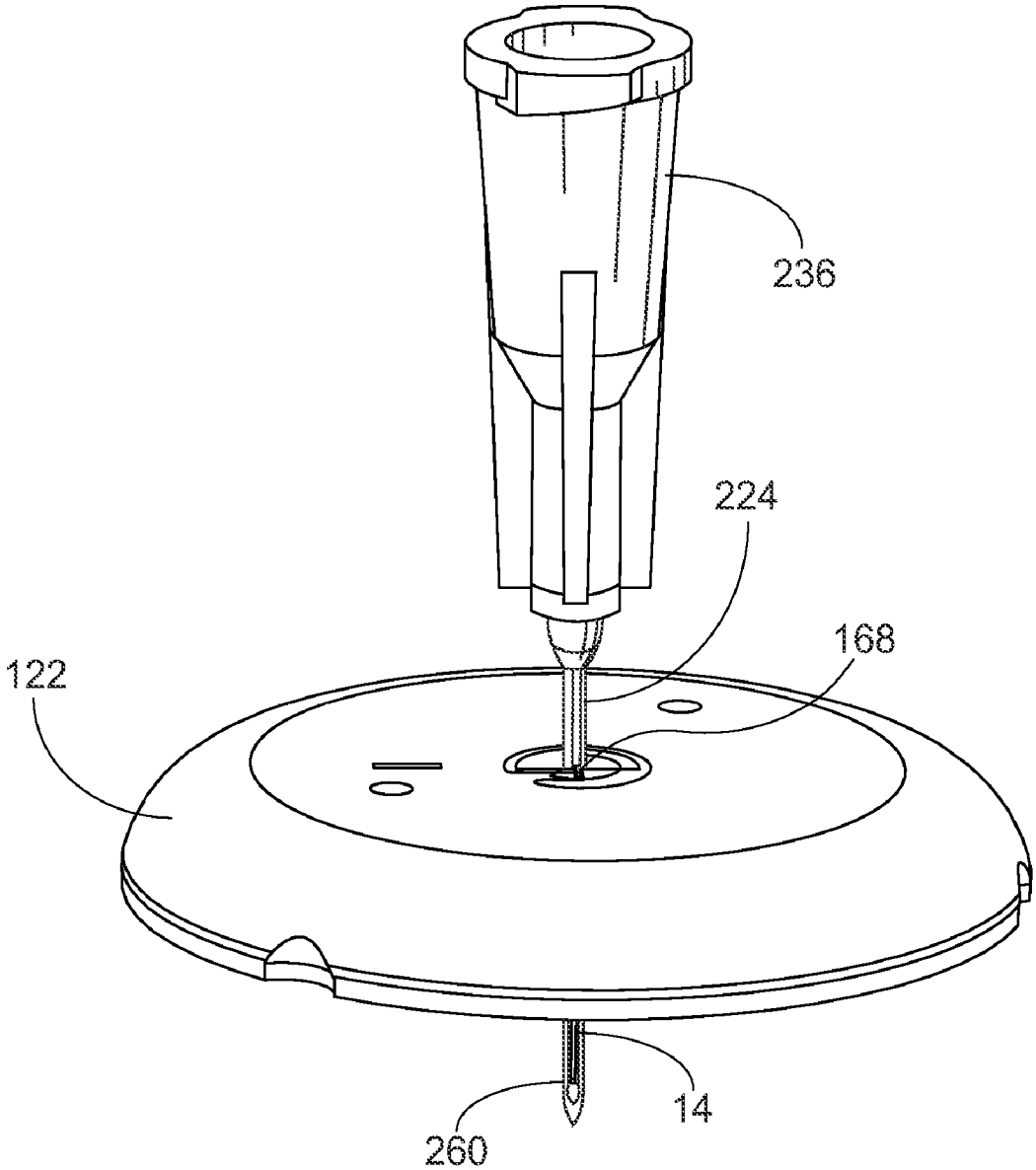

FIG. 16

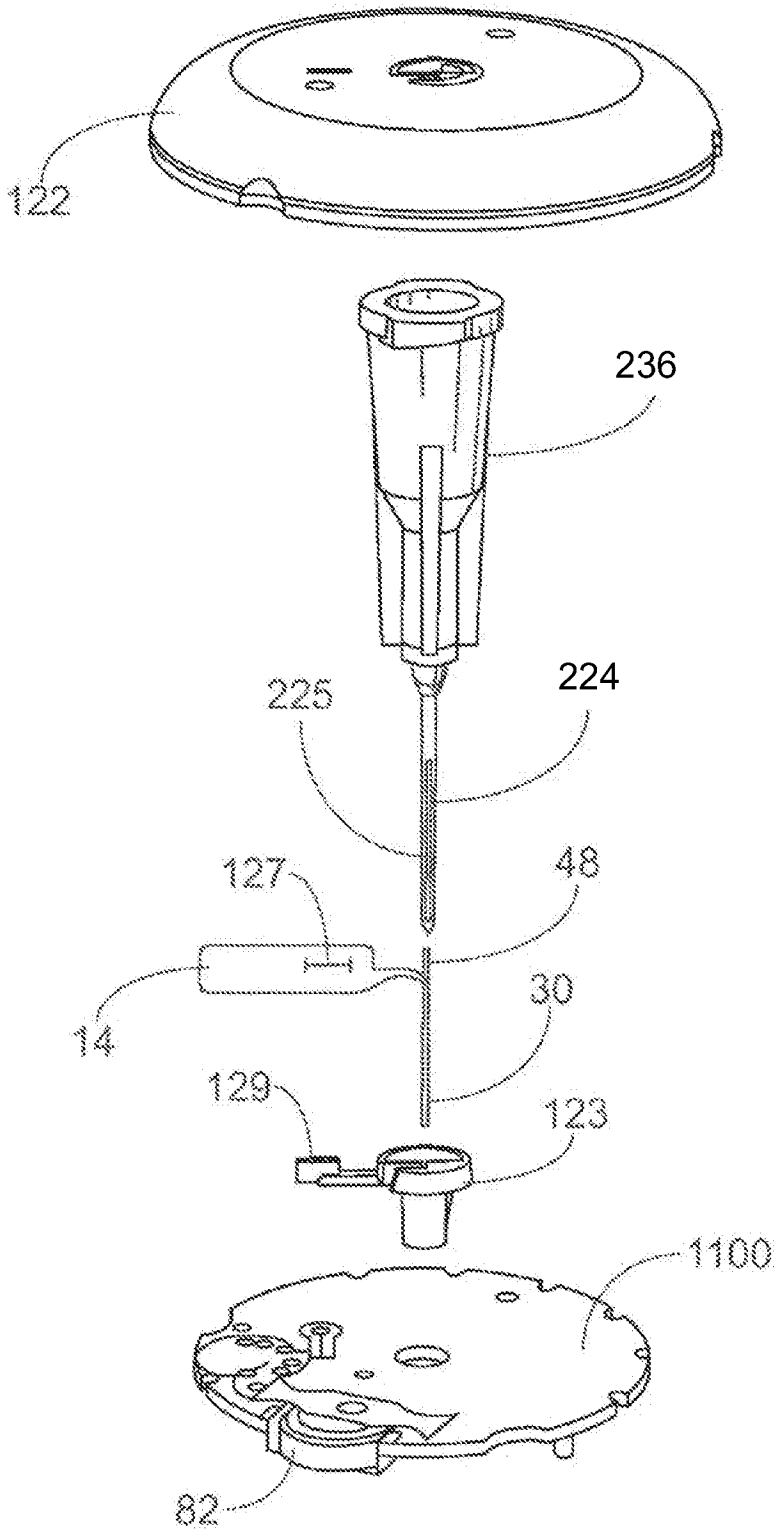

FIG. 17

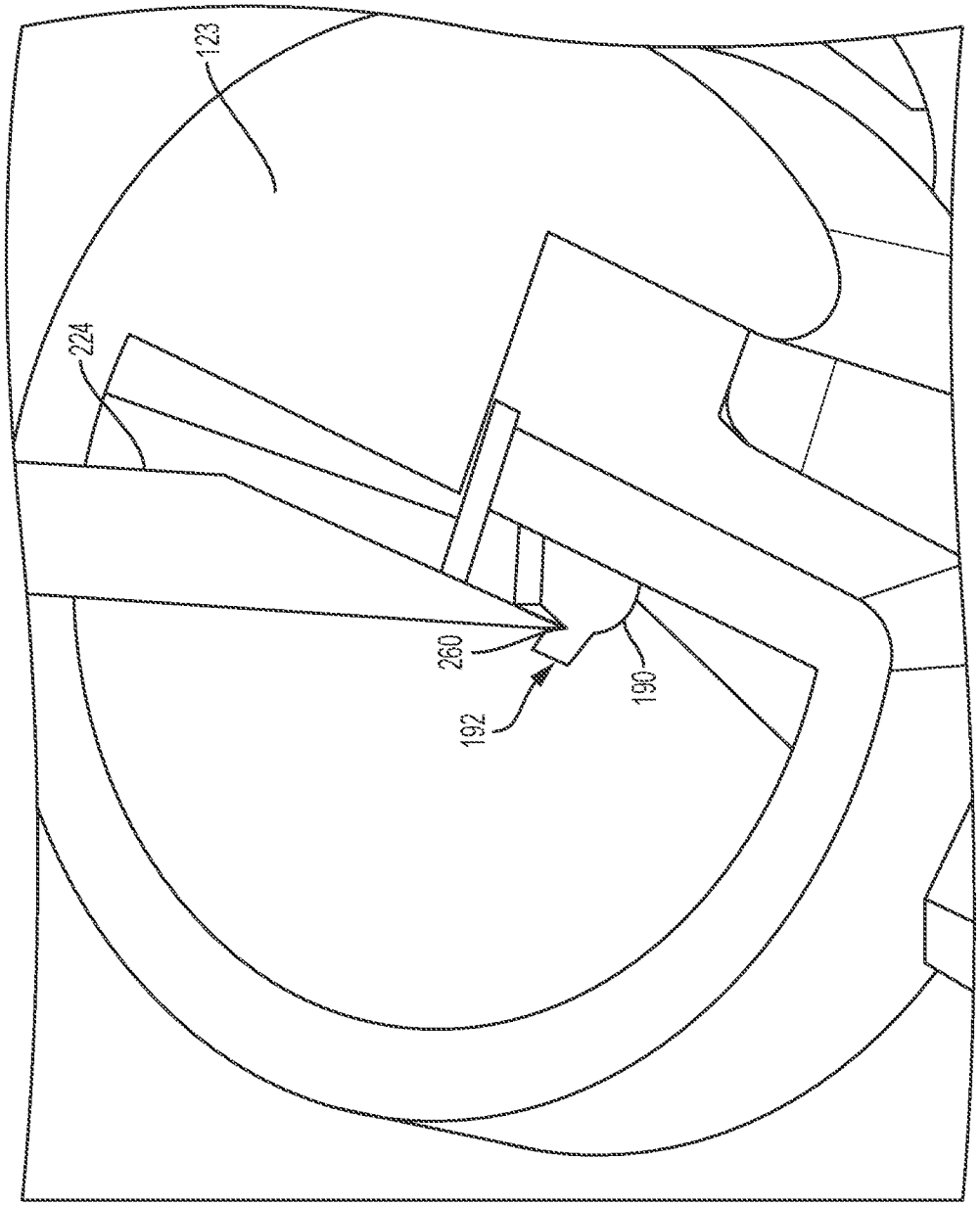

FIG. 17A

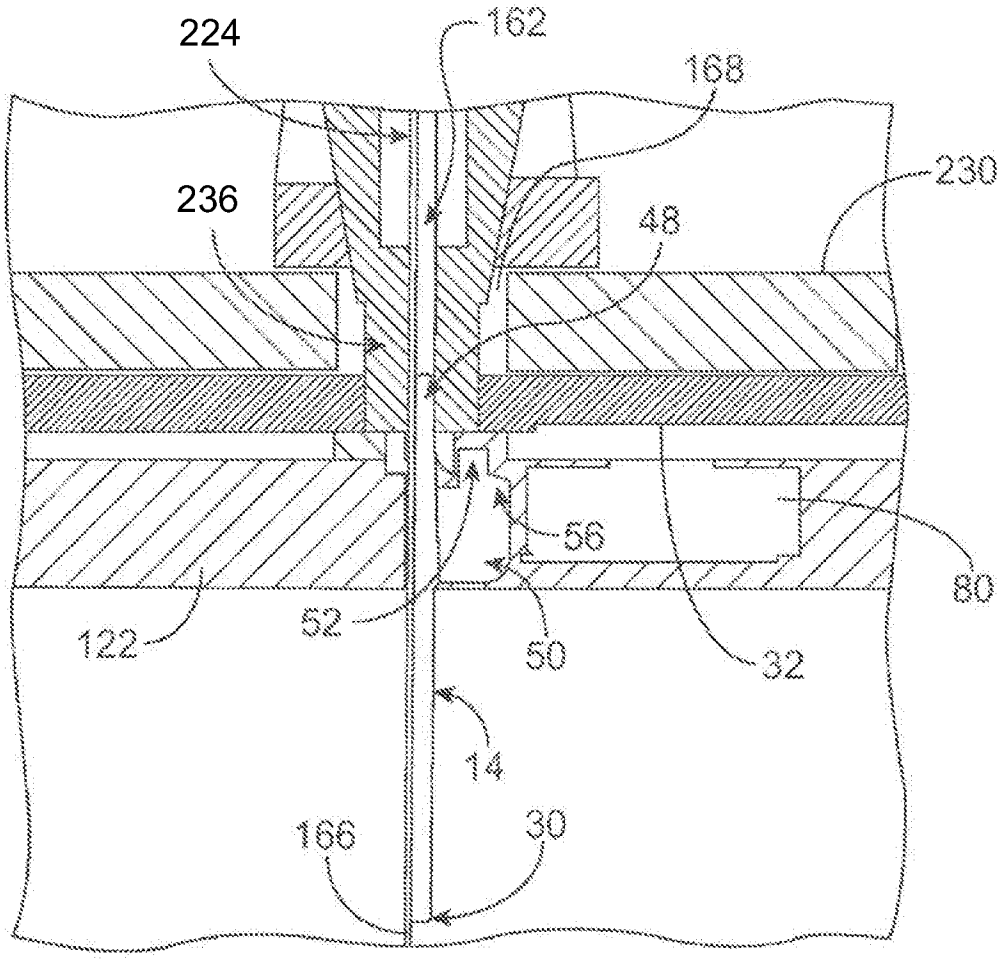

FIG. 18

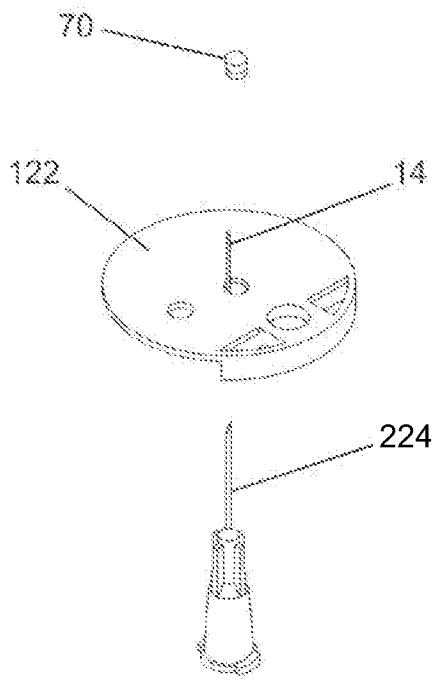

FIG. 19

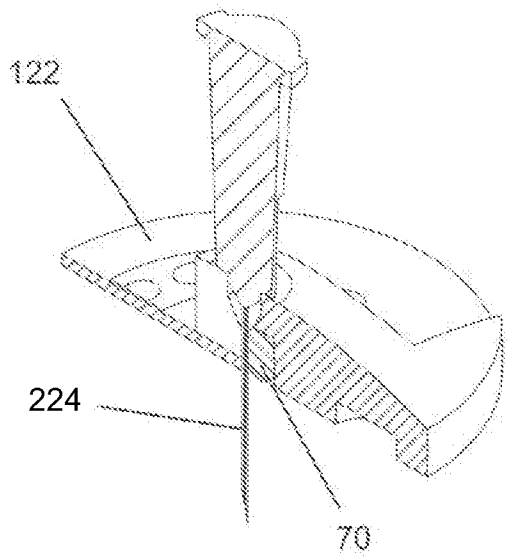

FIG. 20

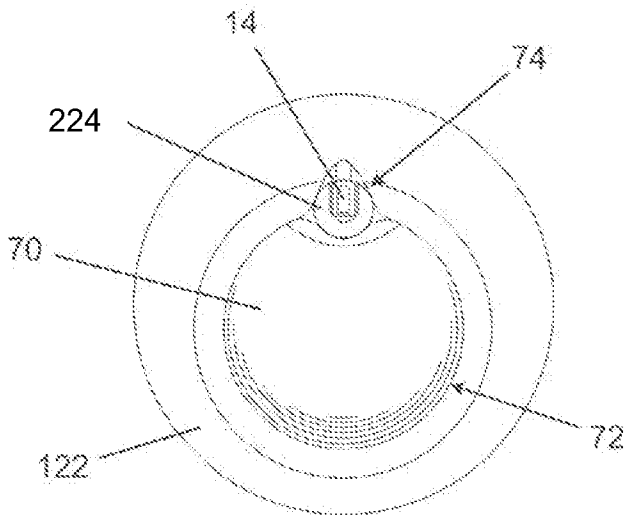

FIG. 21

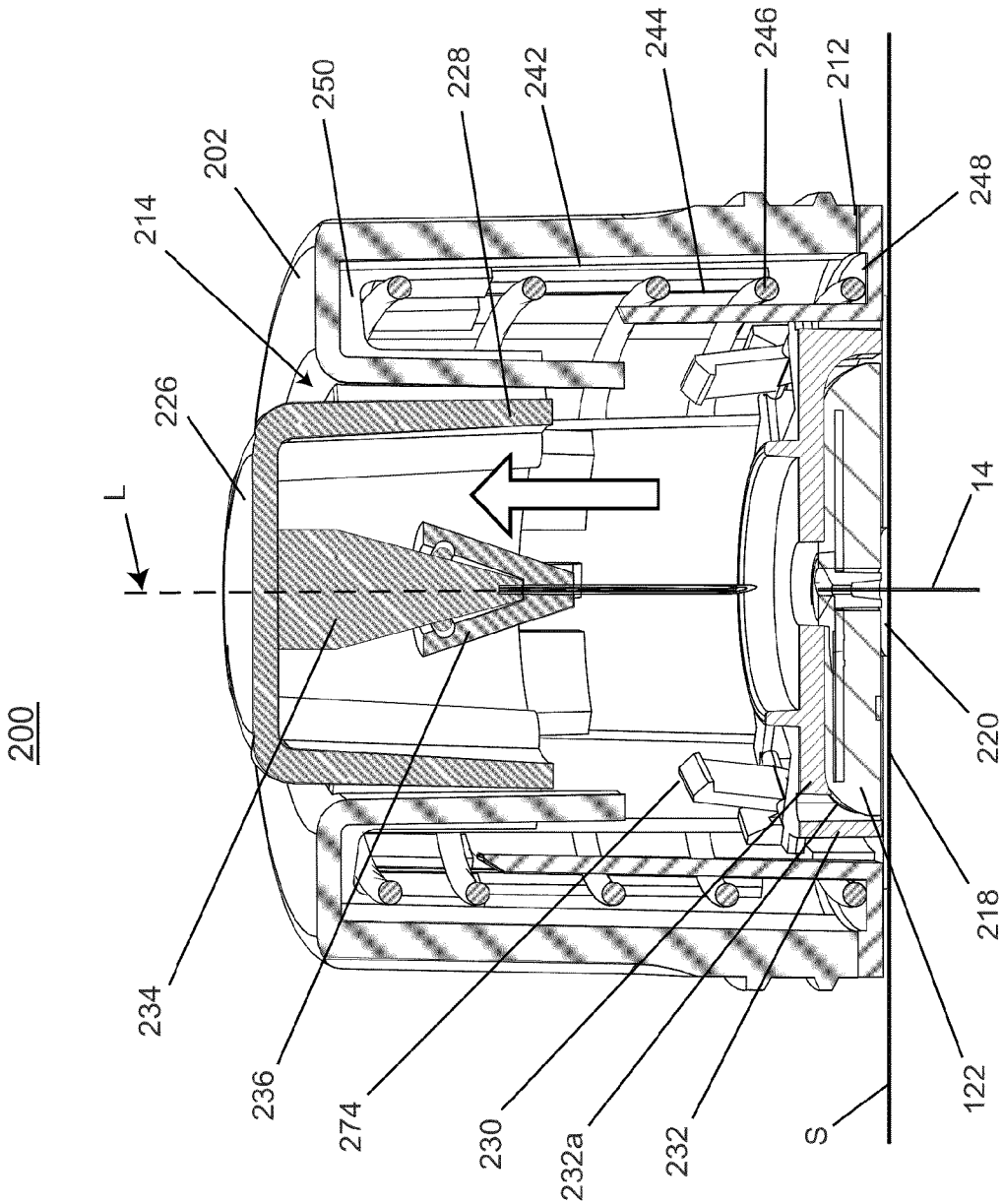
200
202
214
226
L
250
228
242
244
246
212
248
14
220
218
122
S
232
232a
230
274
236
234

FIG. 22

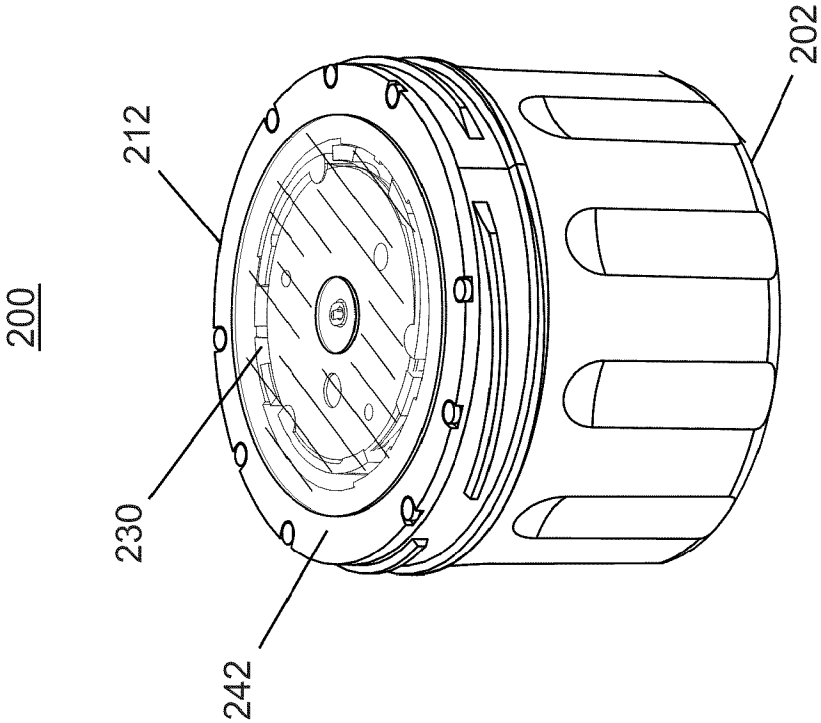

FIG. 24

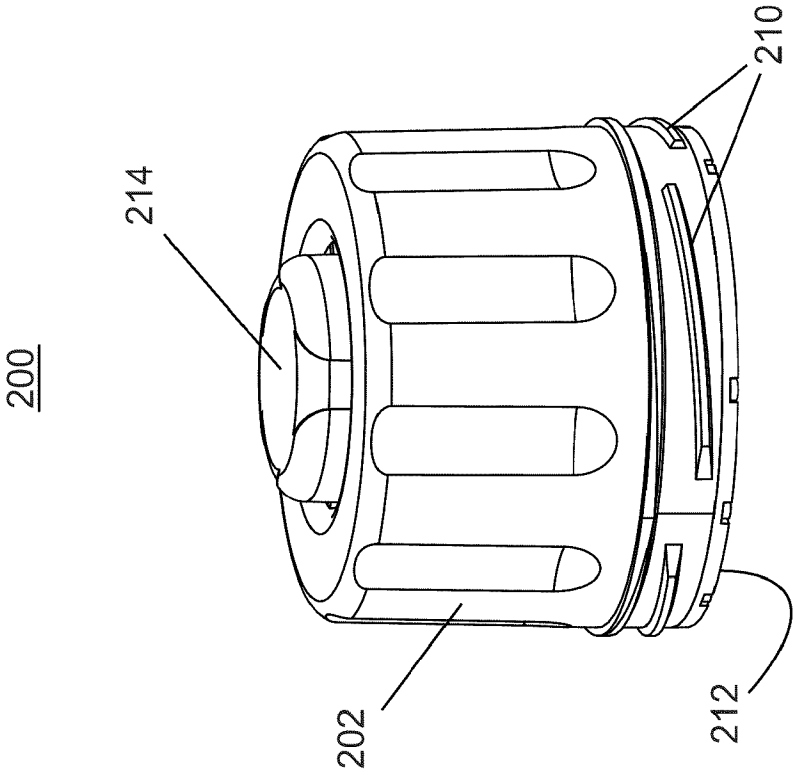

FIG. 23

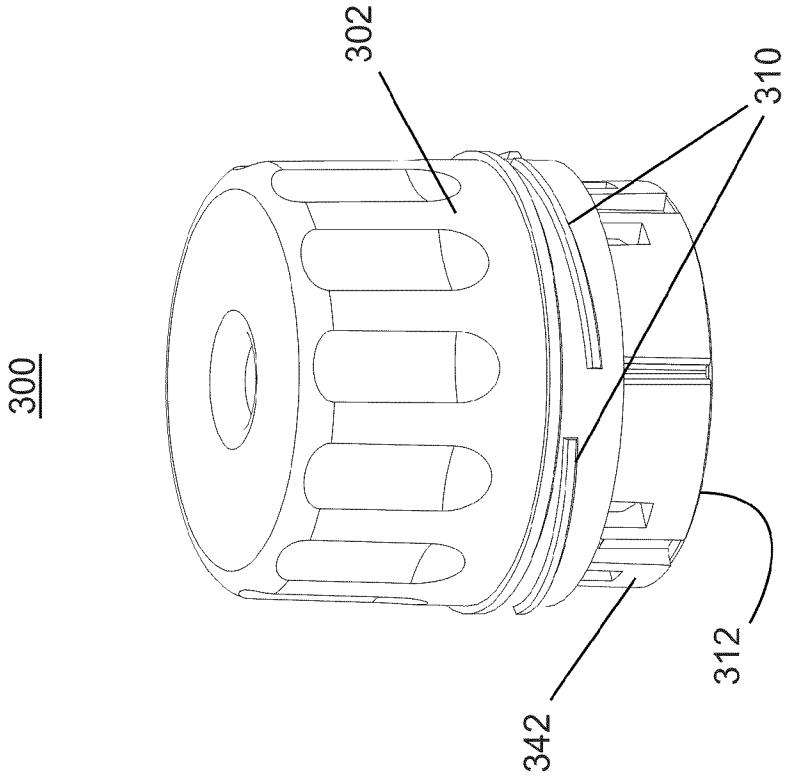

FIG. 26

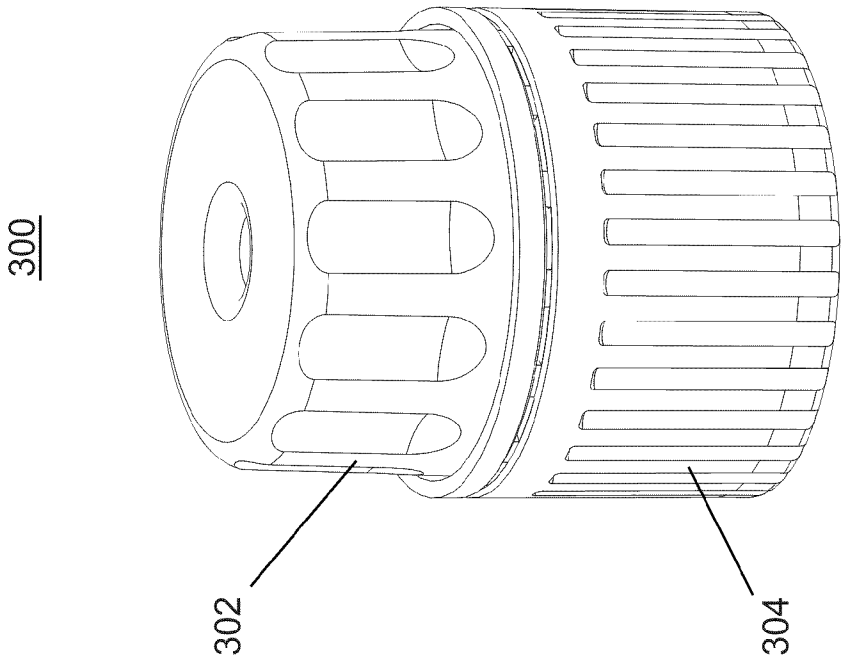

FIG. 25

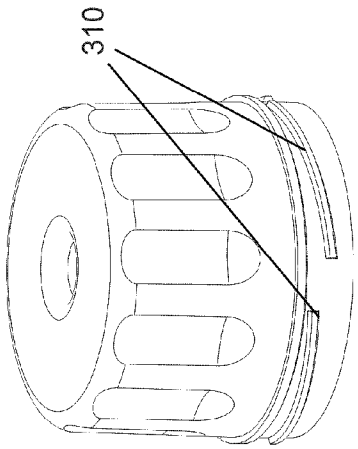

FIG. 27

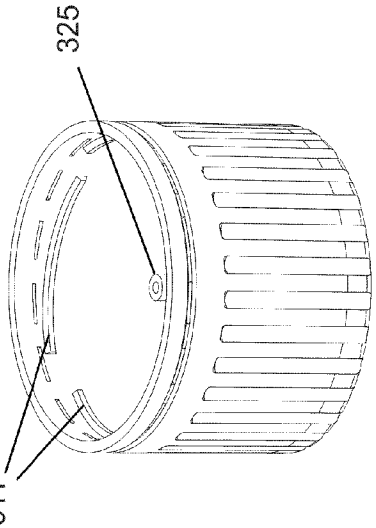

FIG. 29

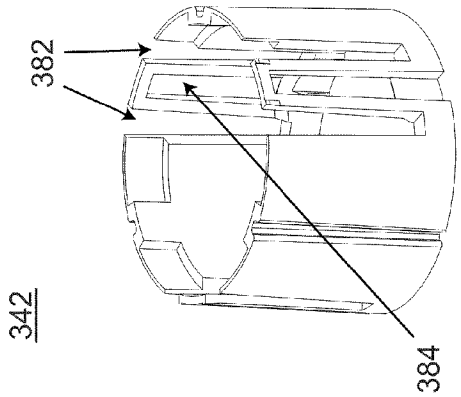

FIG. 28

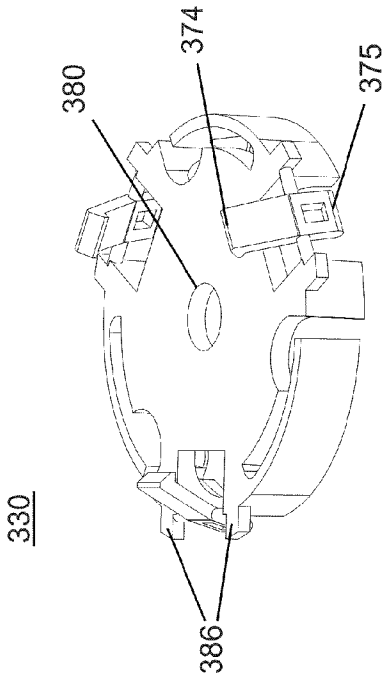

FIG. 30

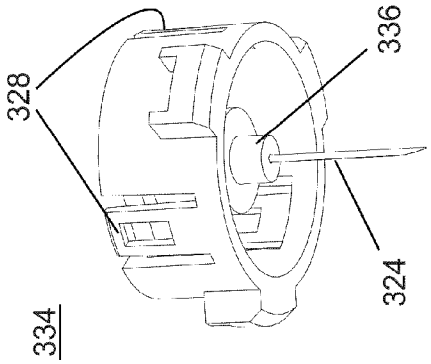

FIG. 32

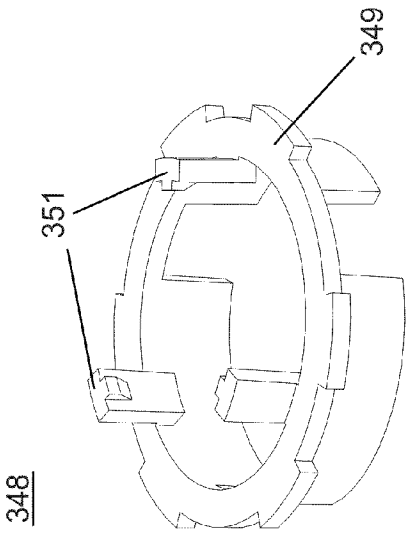

FIG. 31

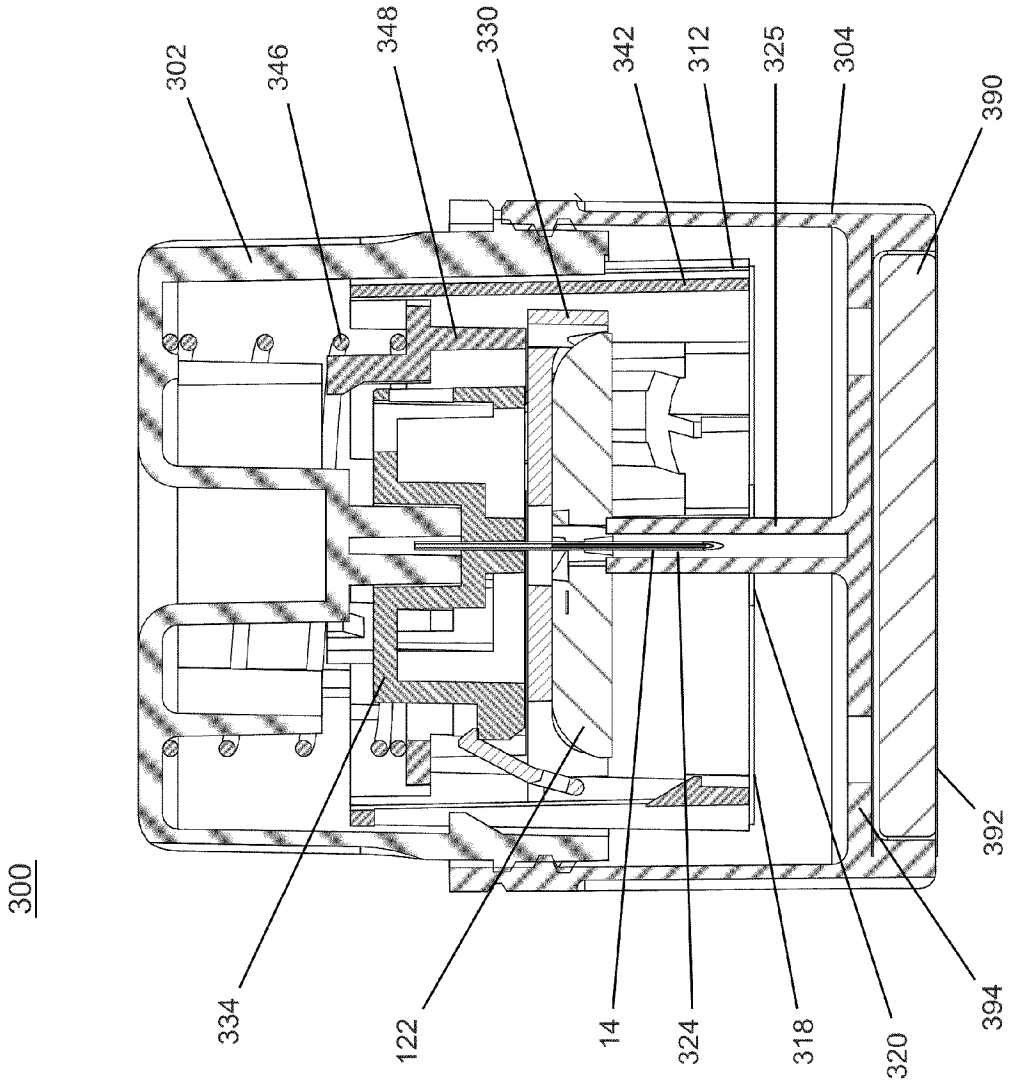
300
302
346
348
330
342
312
325
304
390
334
122
14
324
318
320
394
392

FIG. 33

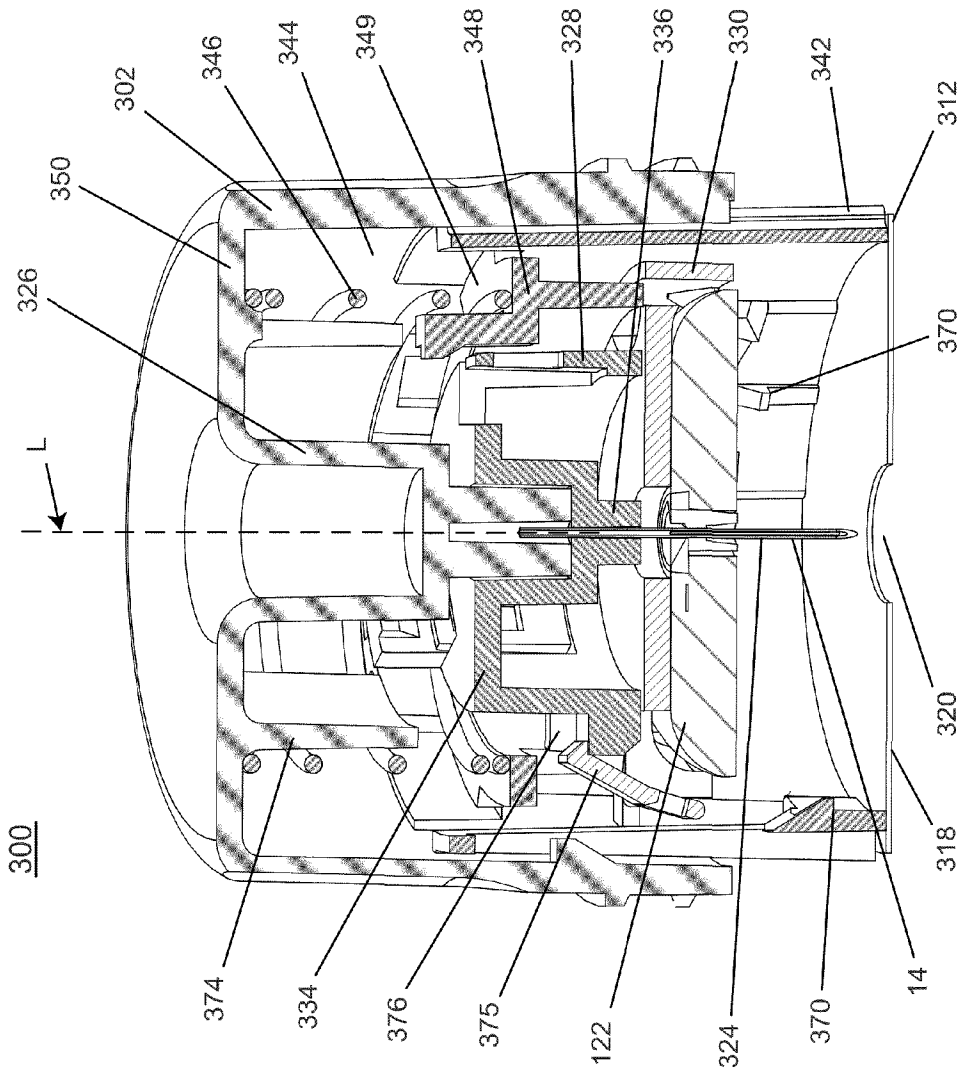
300
L
326
350
302
346
344
349
348
328
336
330
342
312
370
320
318
14
370
324
122
375
376
334
374

FIG. 34

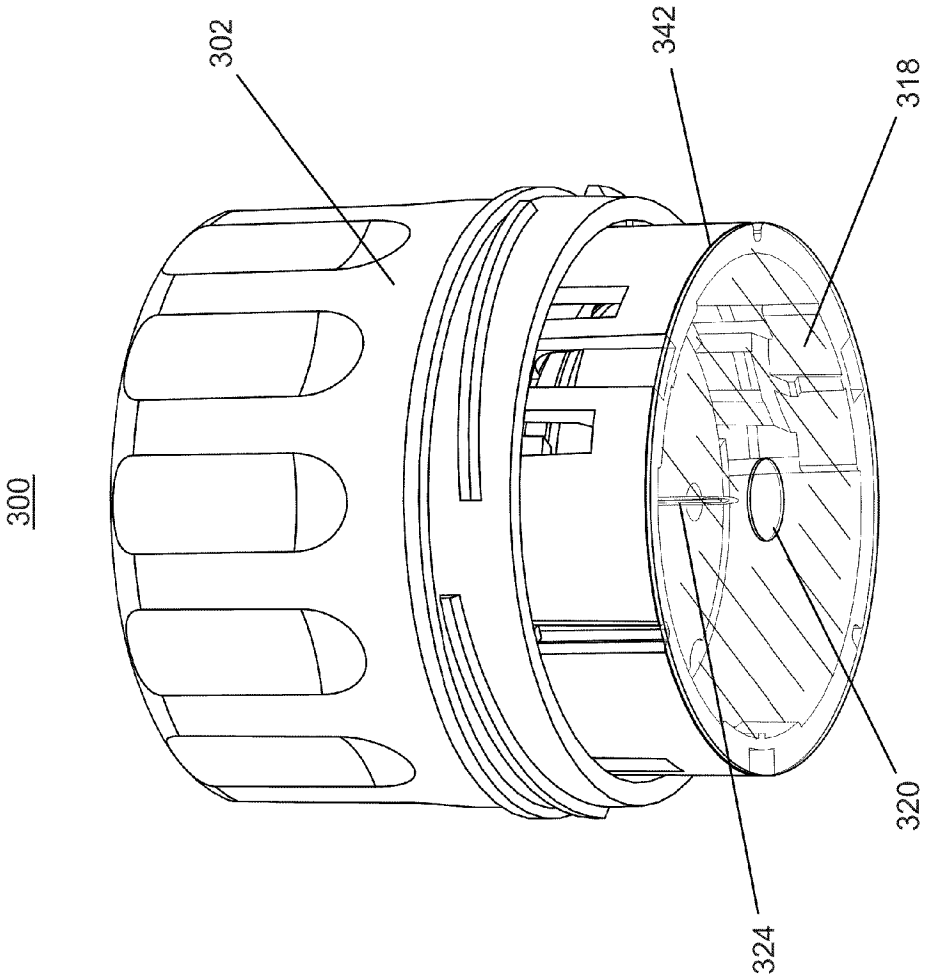

FIG. 35

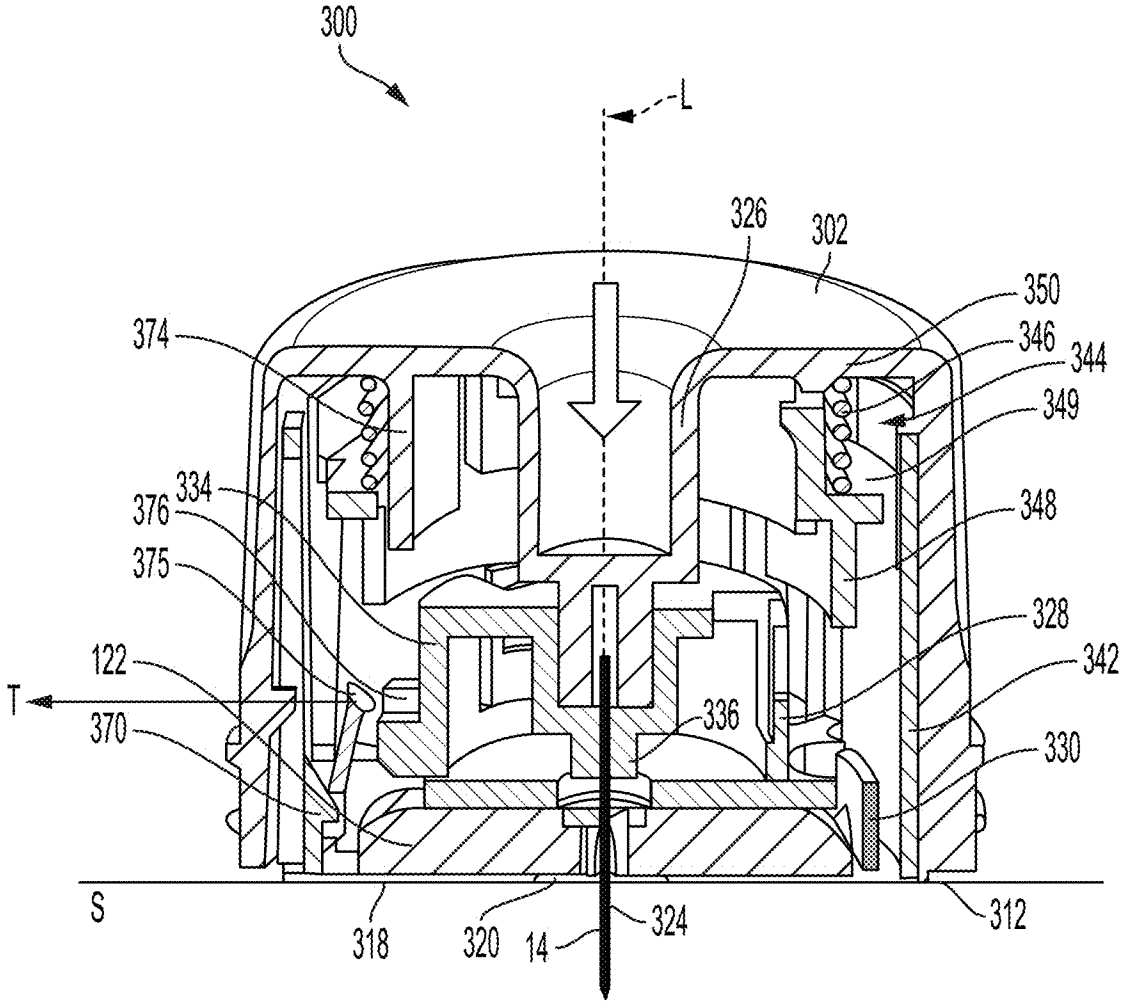
300
L
326
302
350
346
344
349
348
328
342
330
312
374
334
376
375
122
T
370
336
S
318
320
14
324

FIG. 36

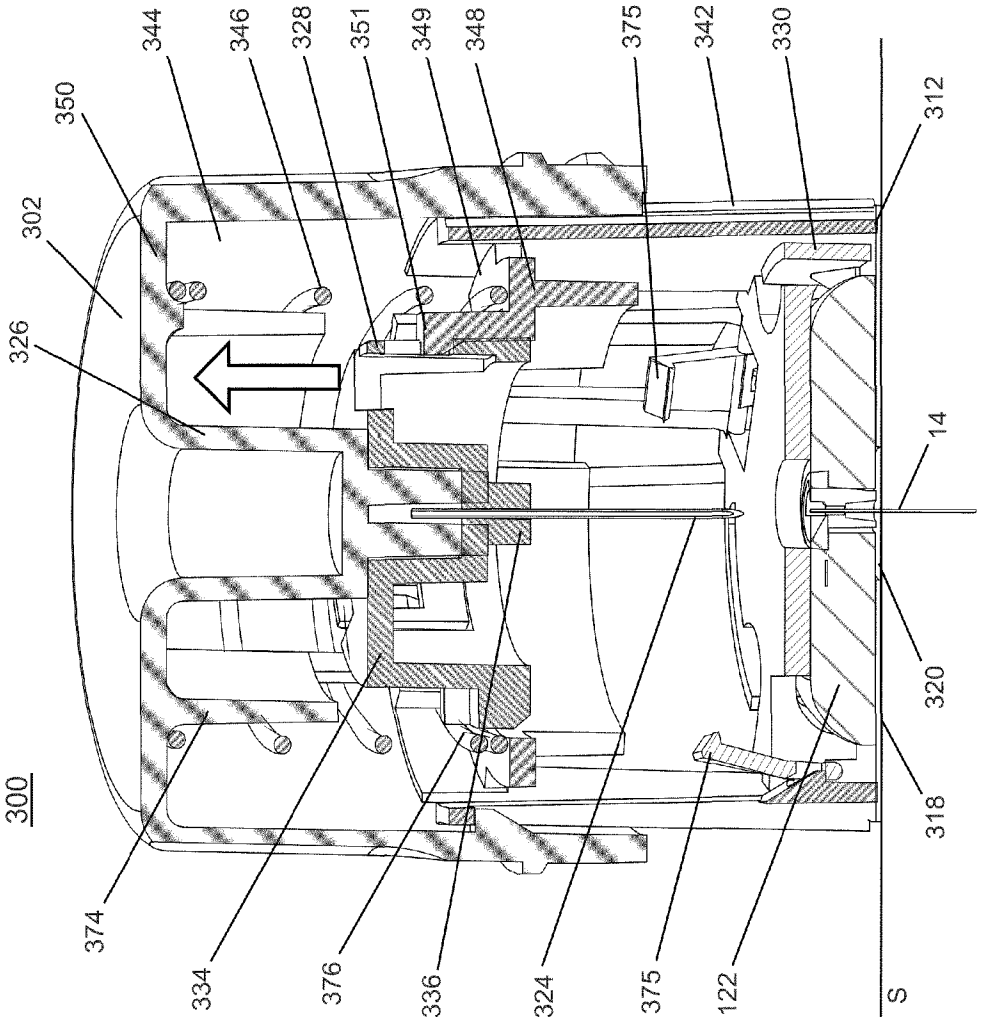
300
302
326
350
344
346
328
351
349
348
375
342
330
312
14
320
318
374
334
376
336
324
375
122
S

FIG. 37

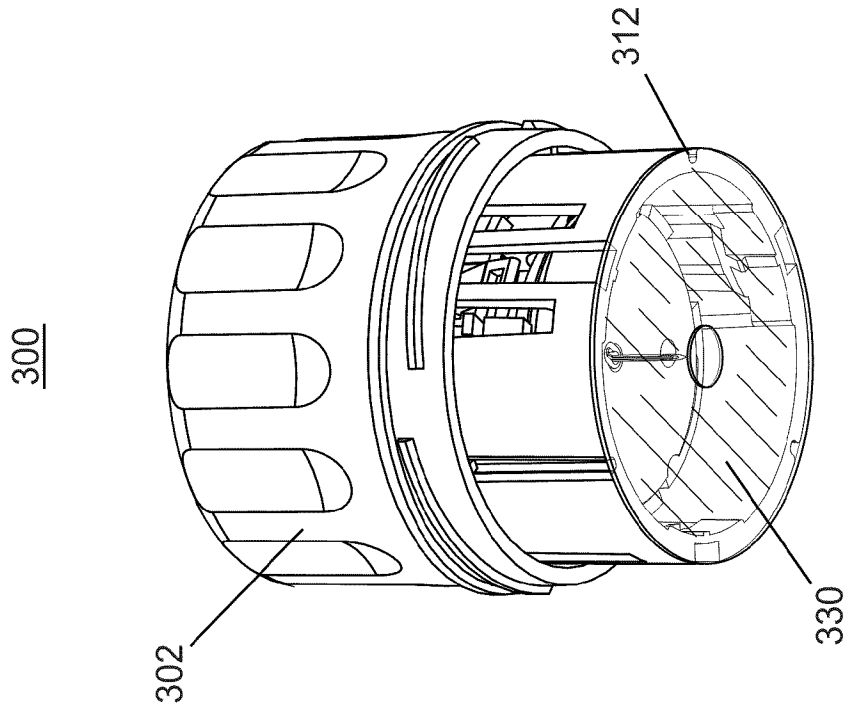

FIG. 39

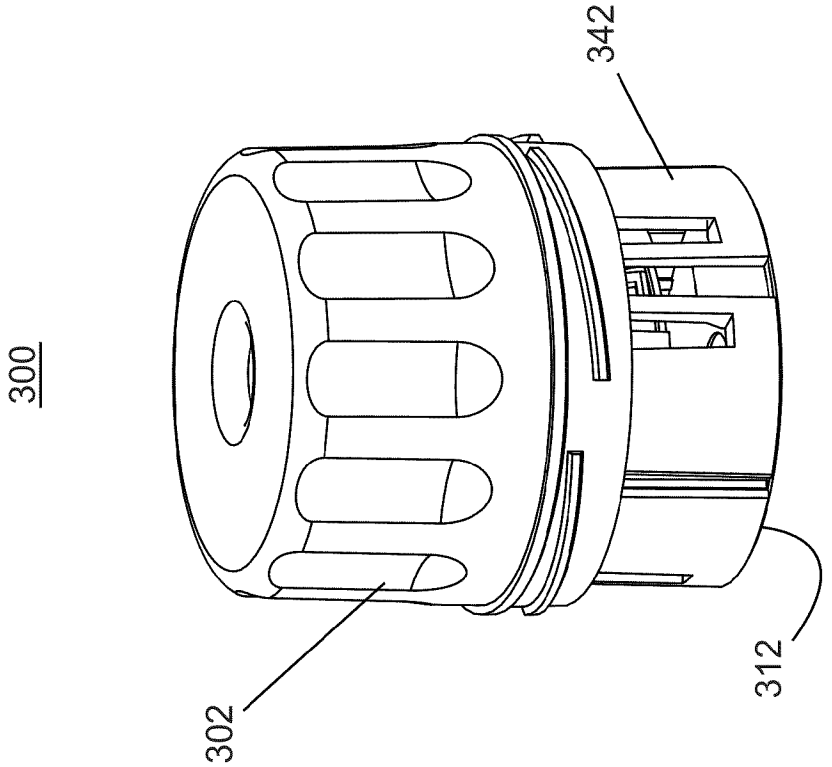

FIG. 38

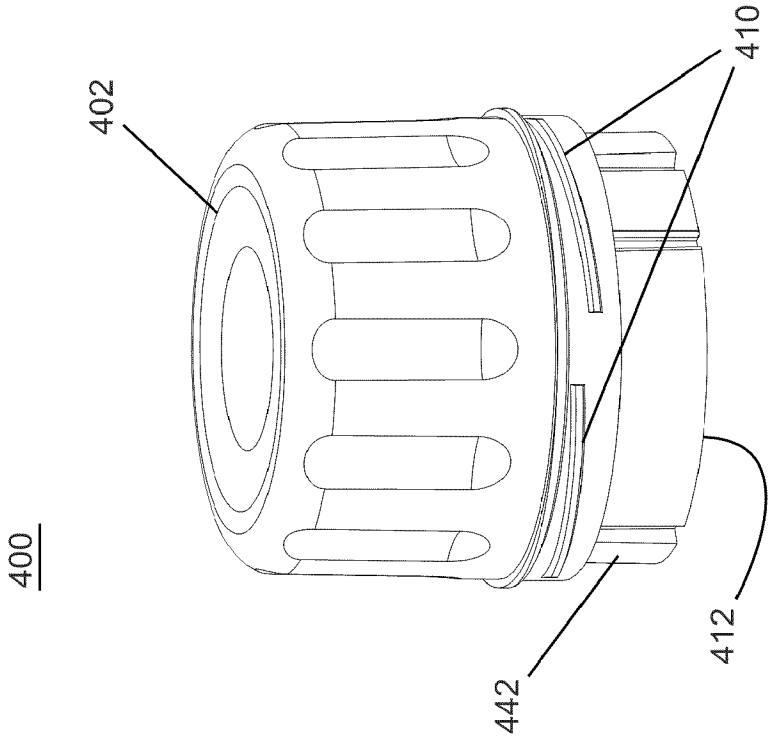

FIG. 41

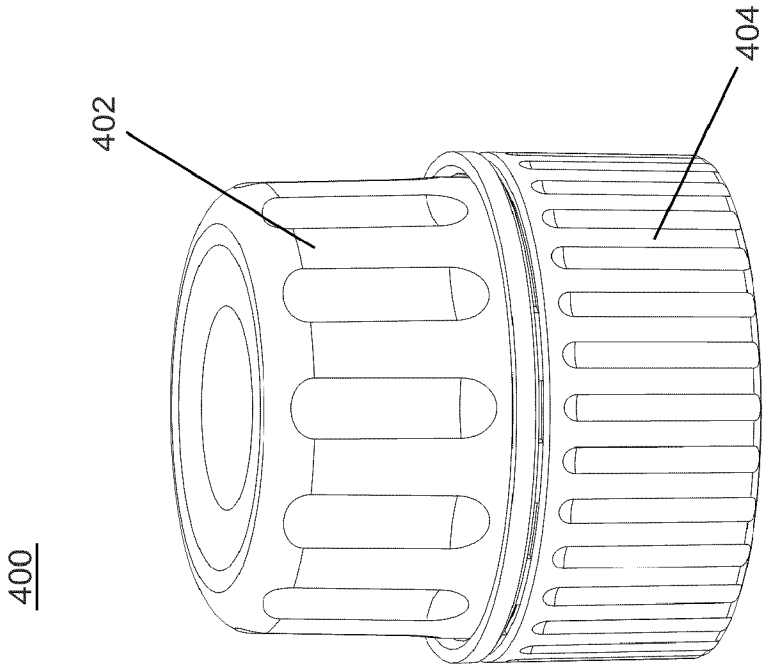

FIG. 40

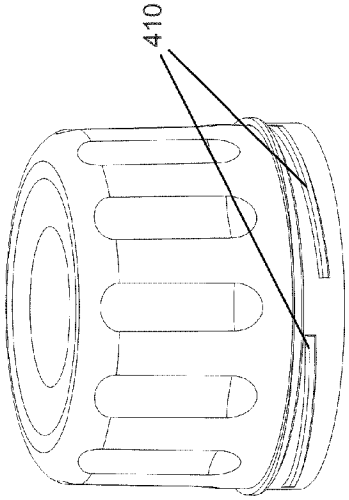

FIG. 42

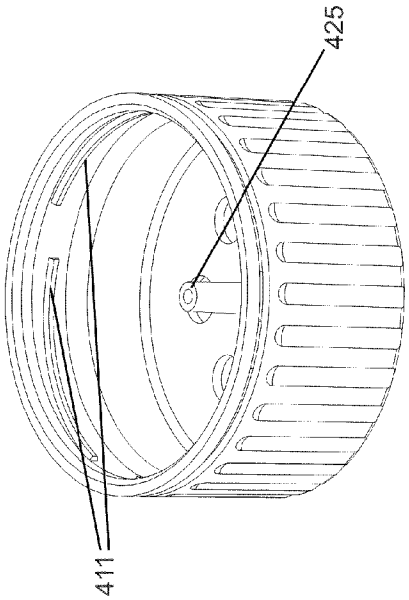

FIG. 44

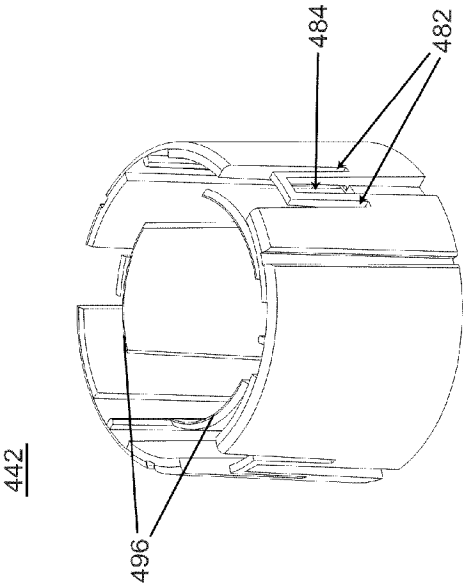

FIG. 43

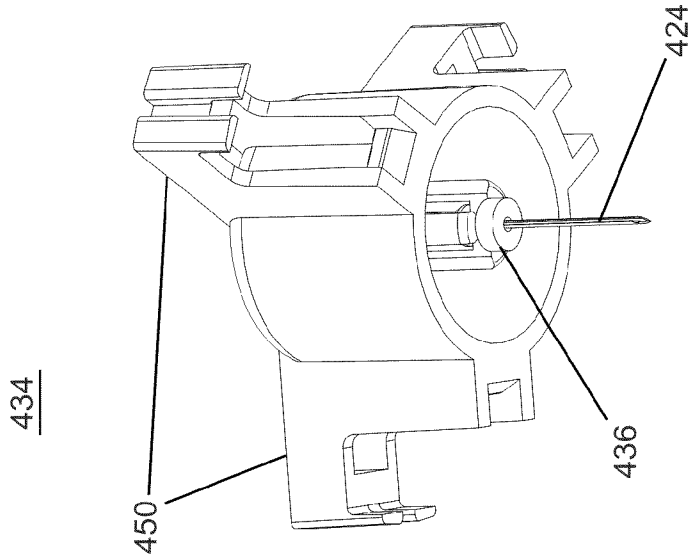

FIG. 46

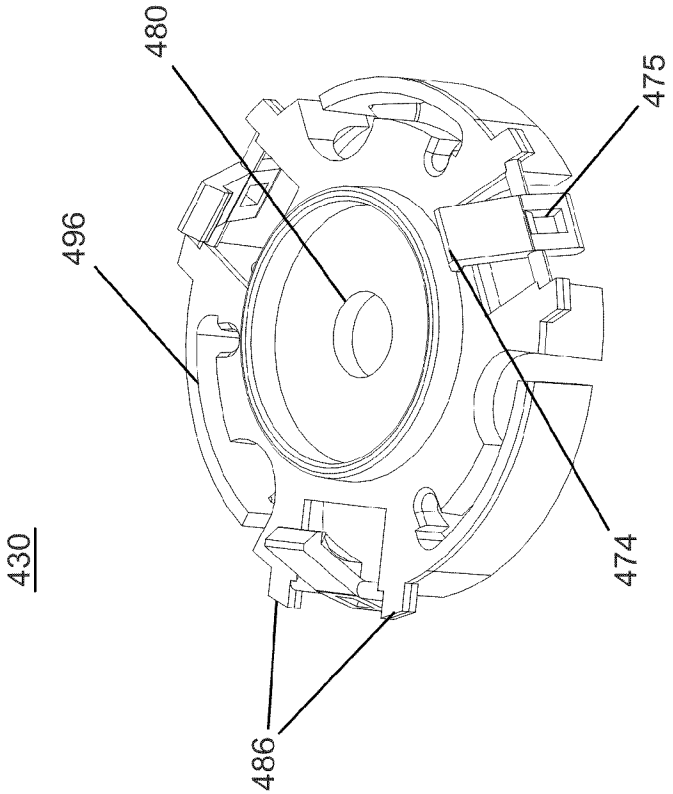

FIG. 45

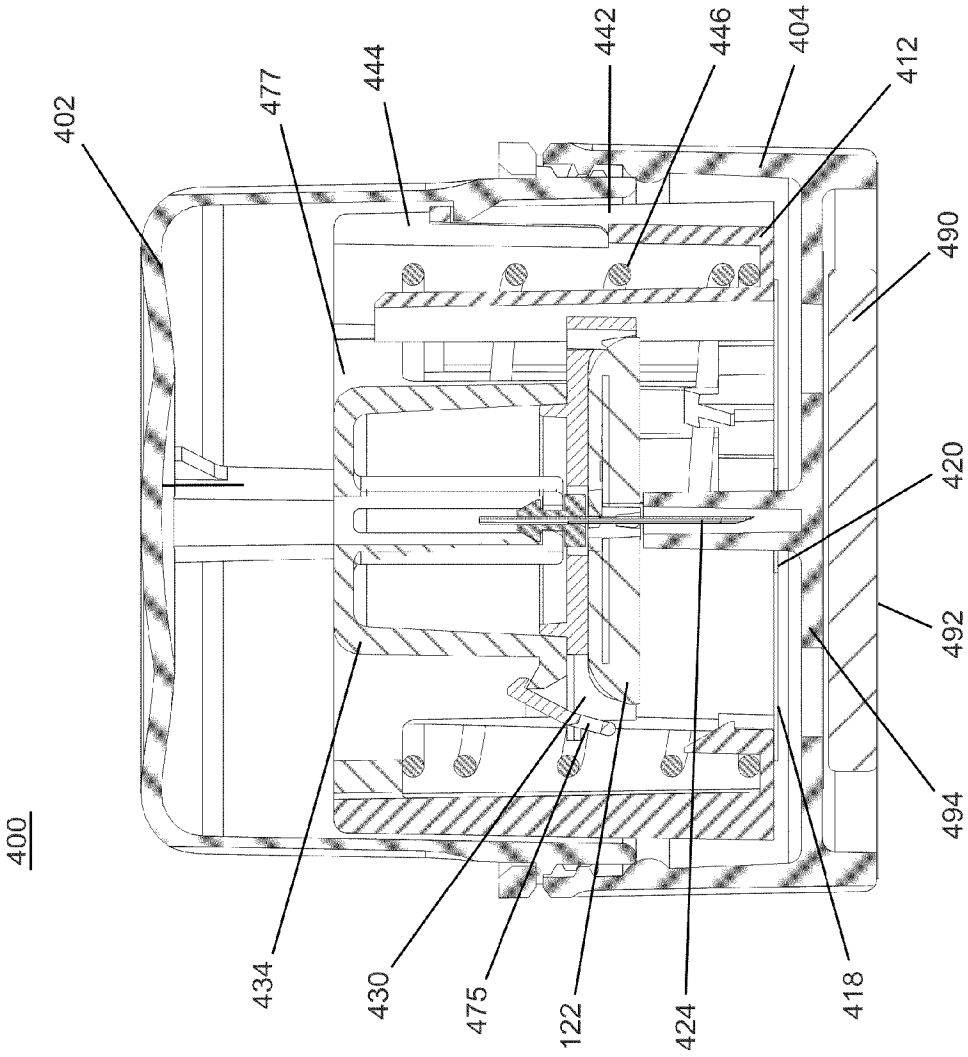
400
402
477
444
442
446
404
412
490
420
492
494
418
424
122
475
430
434

FIG. 47

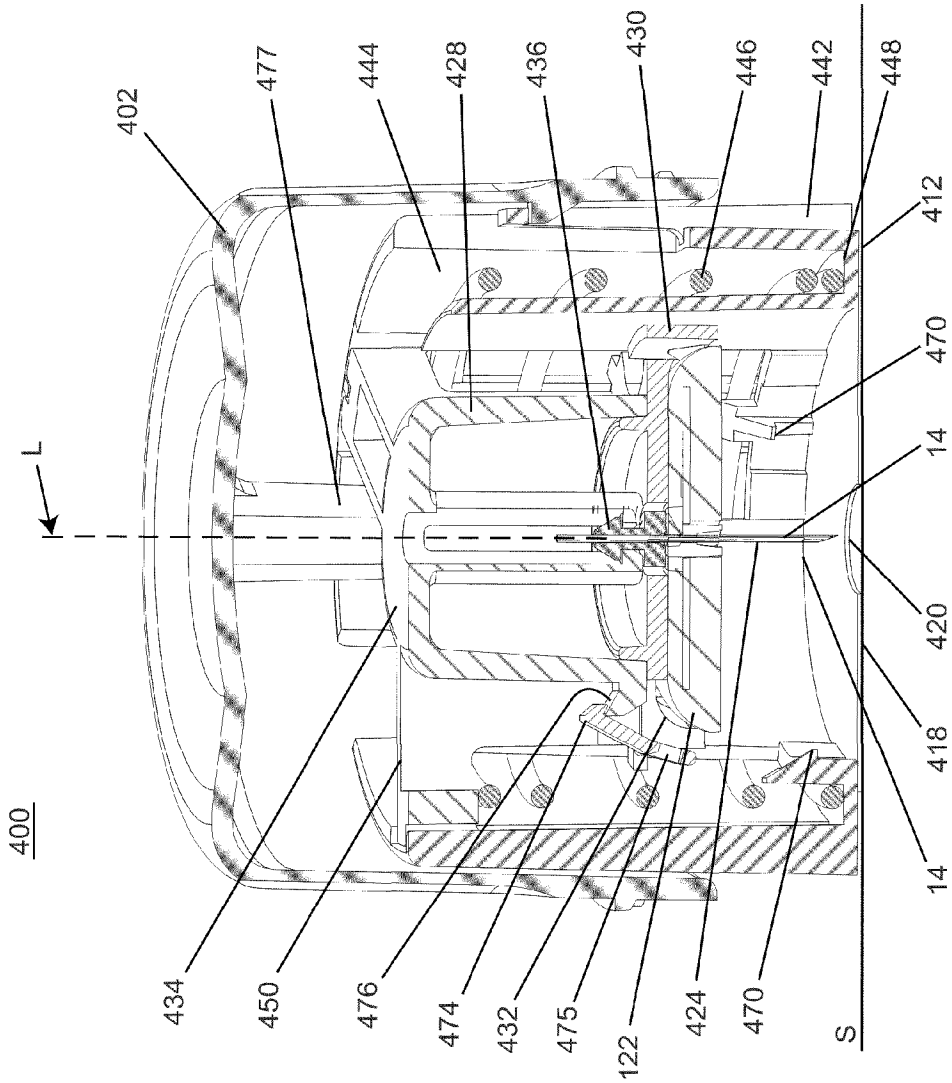
400
L
402
477
444
428
436
430
446
442
448
412
470
14
420
418
14
434
450
476
474
432
475
122
424
470
S

FIG. 48

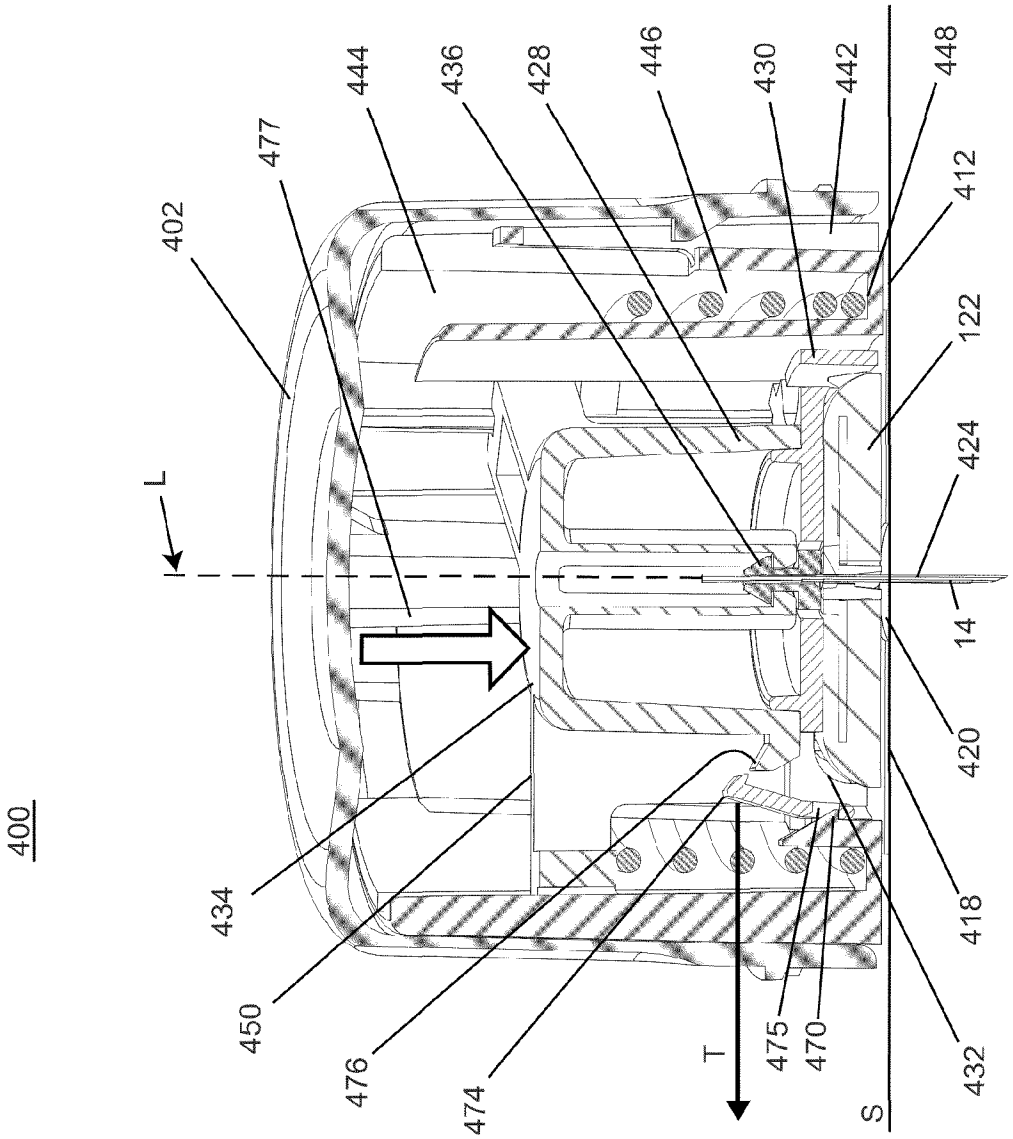
400
L
402
477
444
436
428
446
430
442
448
412
122
424
14
420
418
432
434
450
476
474
T
475
470
S

FIG. 49

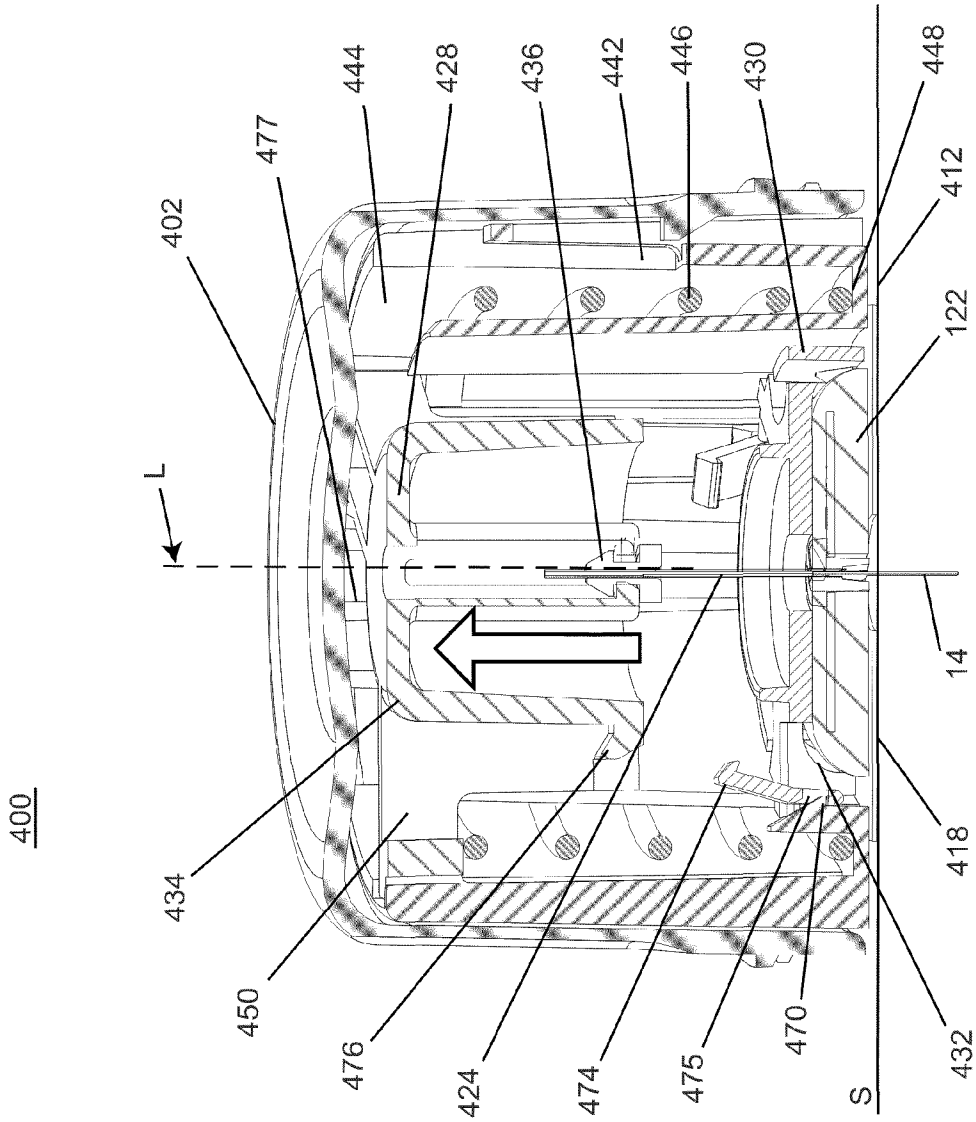
400
402
477
444
428
436
442
446
430
448
412
122
L
14
418
432
S
470
475
474
424
476
450
434

FIG. 50

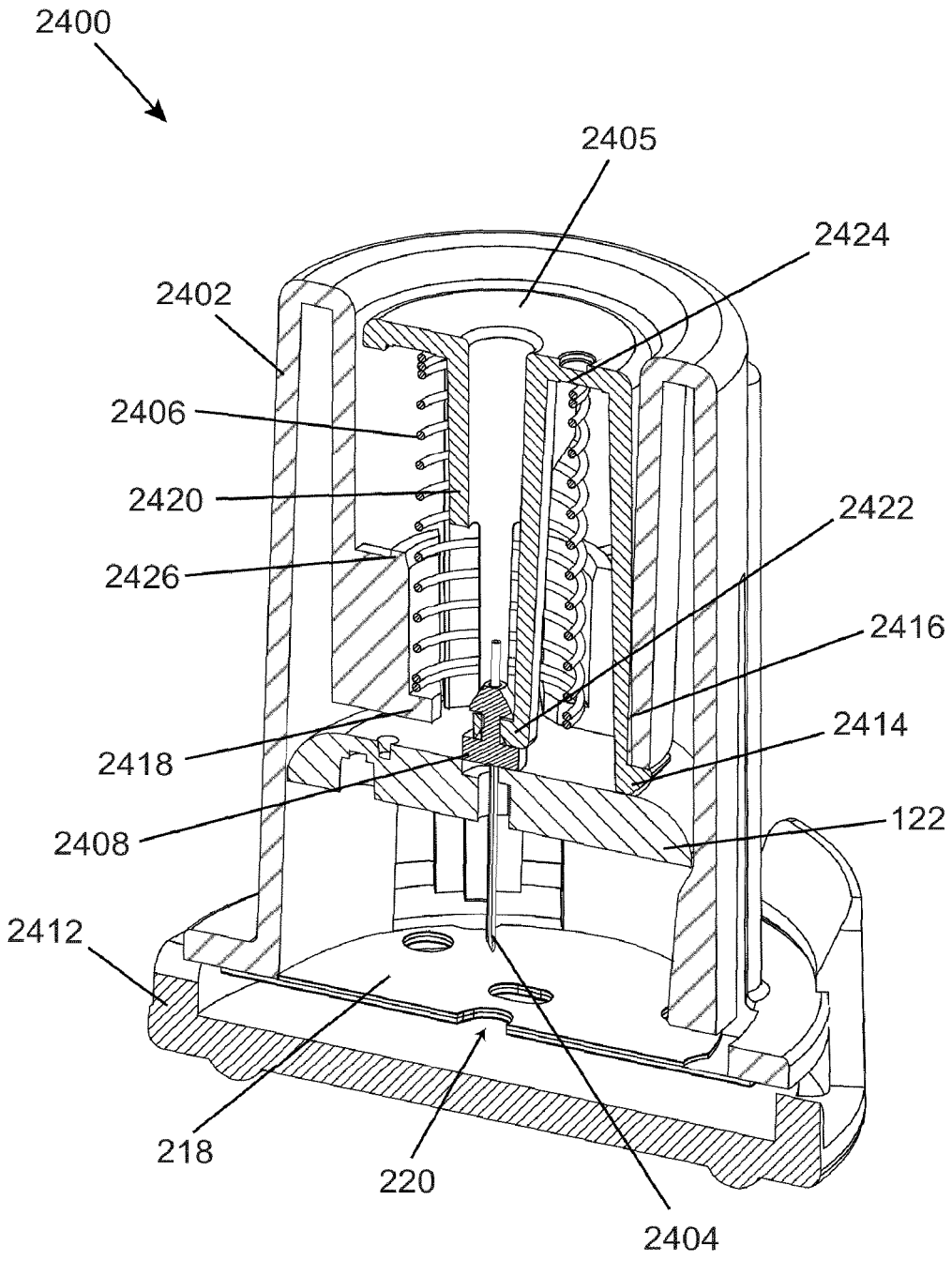
2400
2405
2424
2402
2406
2420
2422
2426
2416
2414
2418
2408
122
2412
218
220
2404

FIG. 51

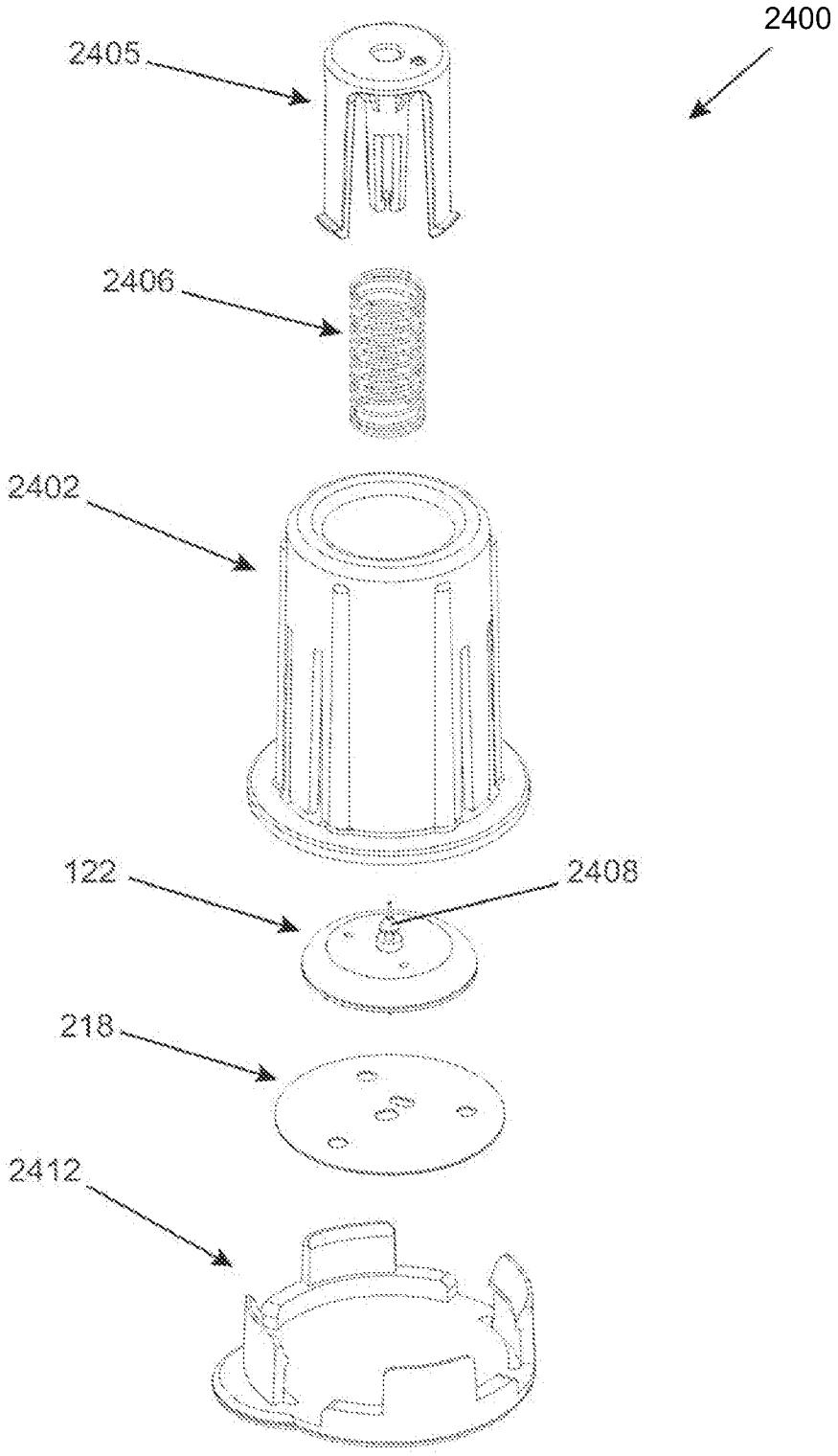

FIG. 52

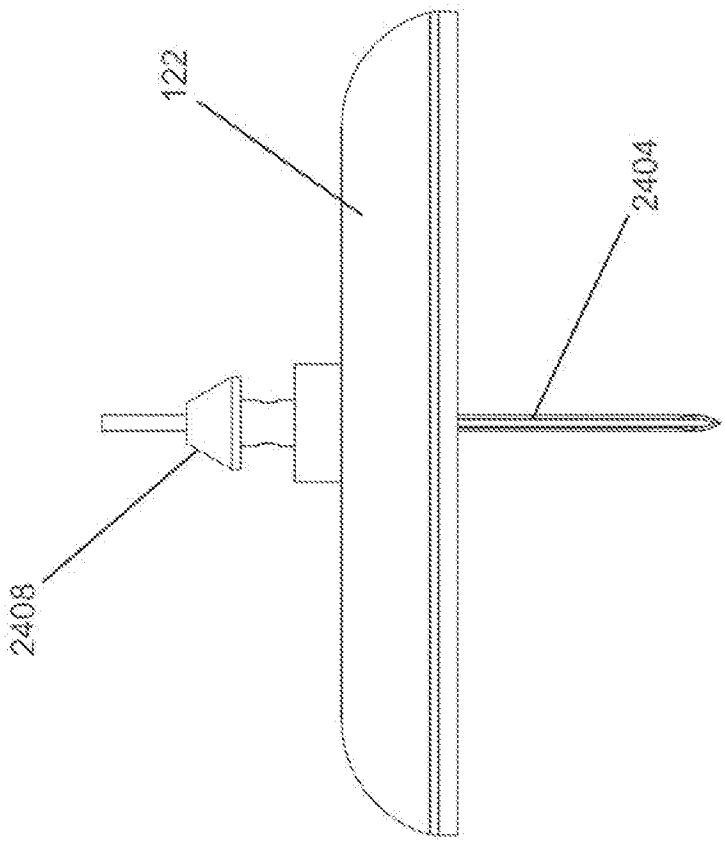

FIG. 54

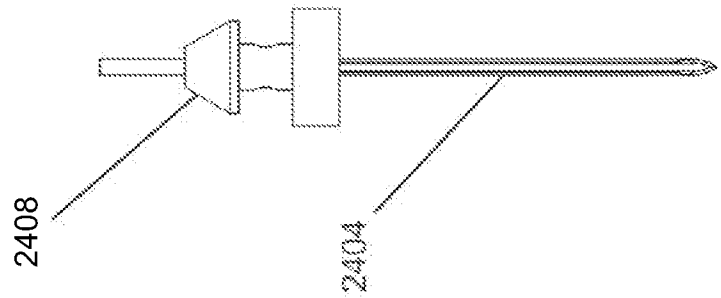

FIG. 53

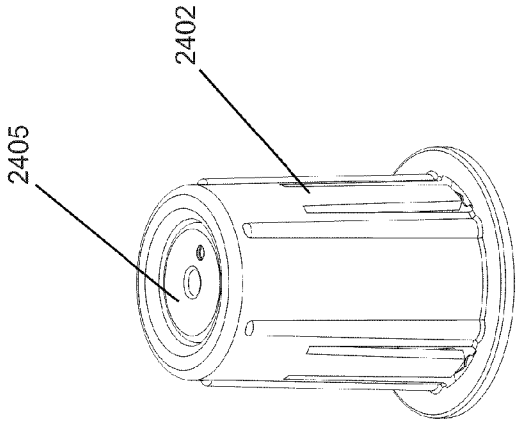

FIG. 56

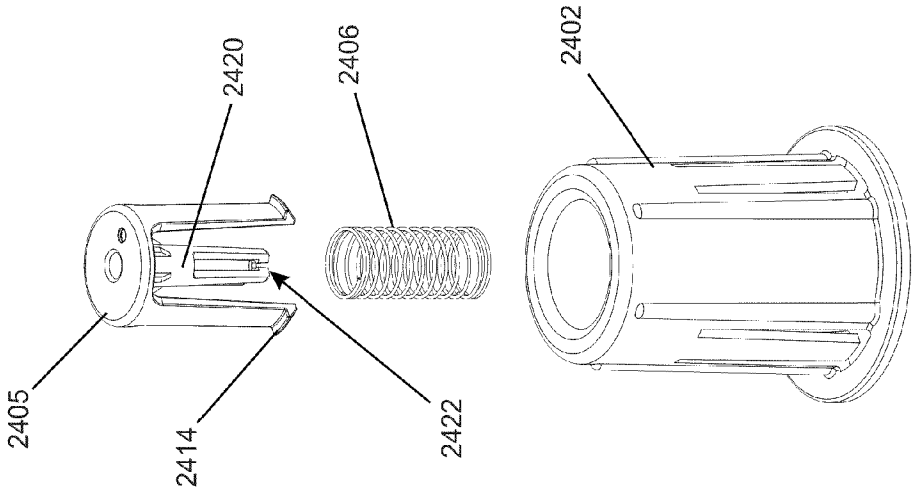

FIG. 55

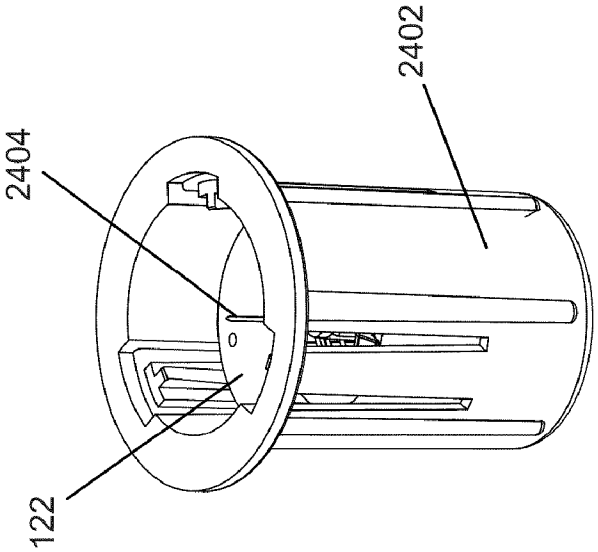

FIG. 58

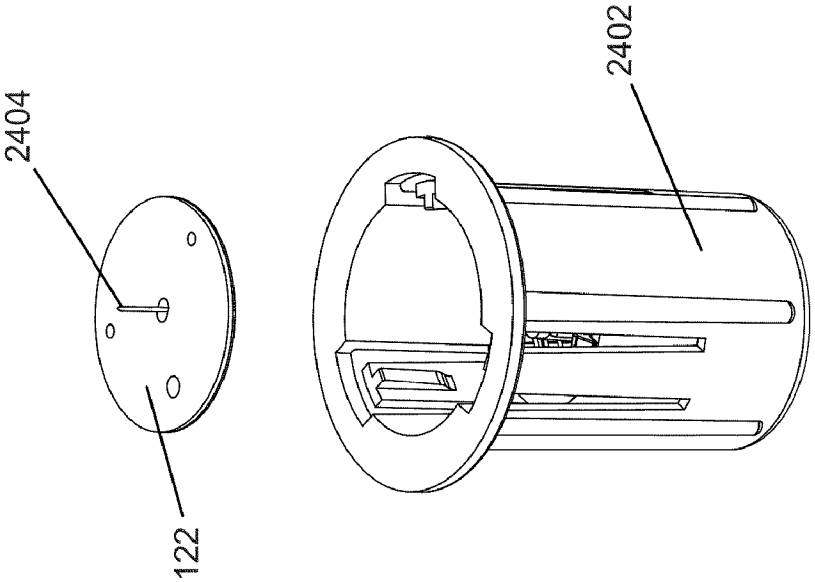

FIG. 57

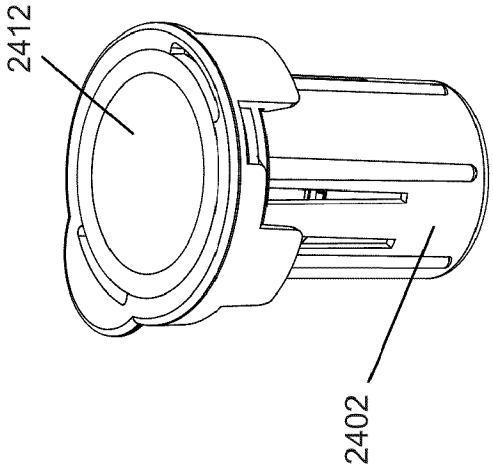

FIG. 60

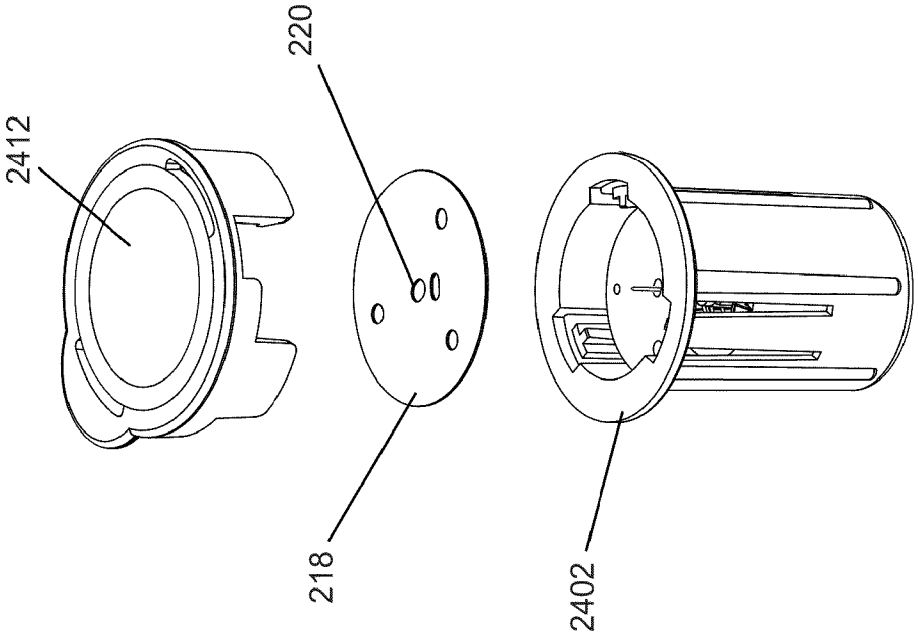

FIG. 59

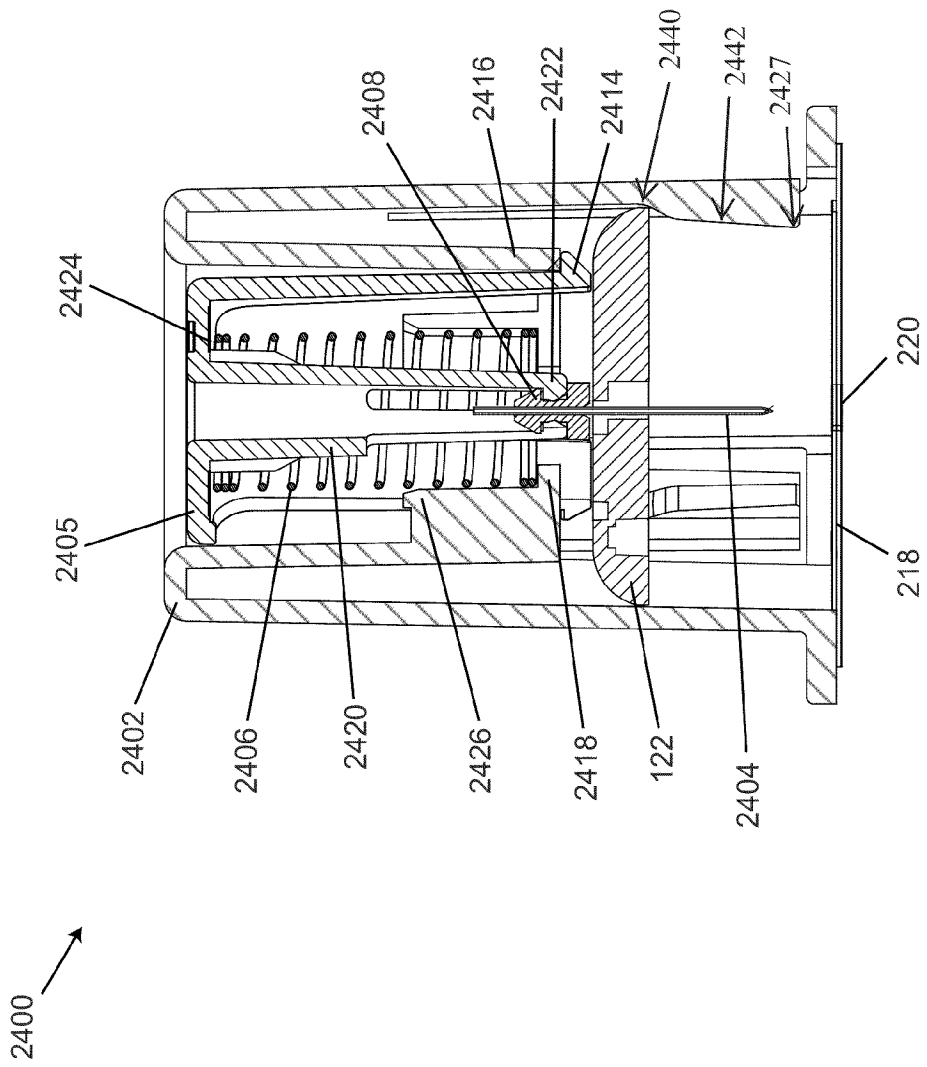
2400
2402
2405
2424
2406
2420
2426
2418
122
2404
218
220
2408
2416
2422
2414
2440
2442
2427

FIG. 61

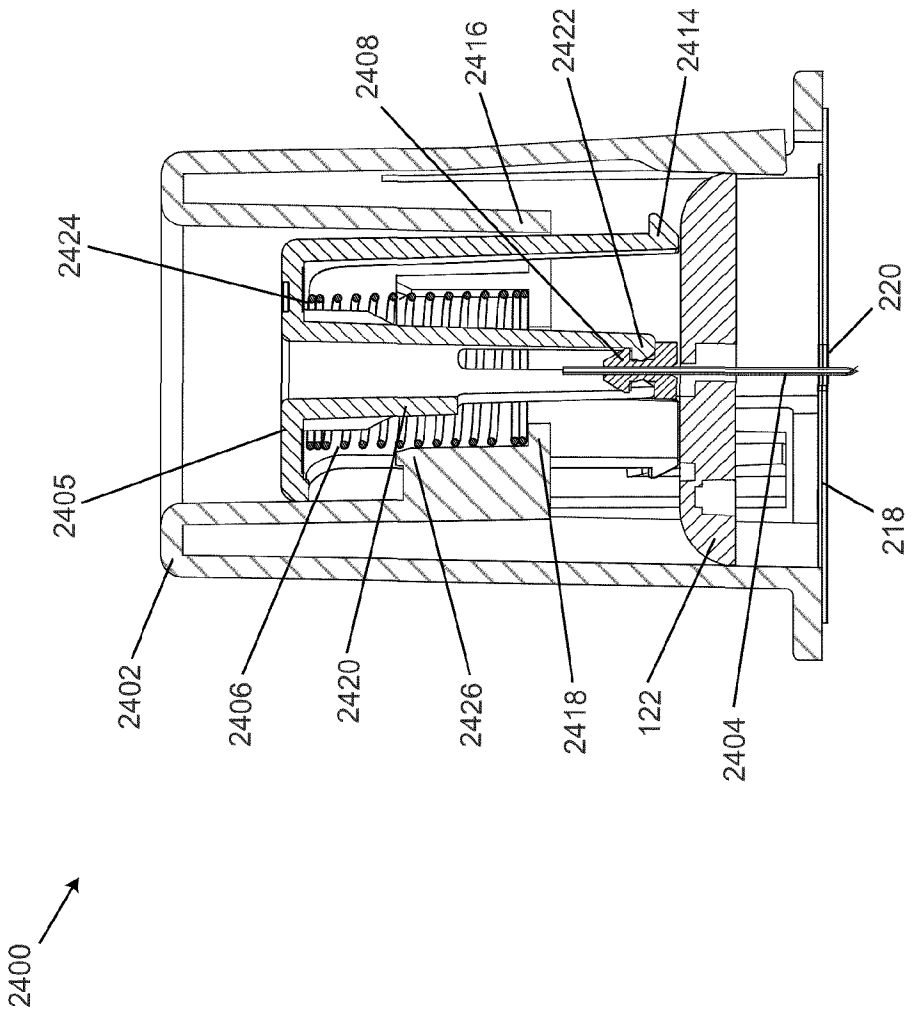
2400
2402
2405
2424
2406
2420
2426
2418
2408
2416
2422
2414
122
2404
220
218

FIG. 62

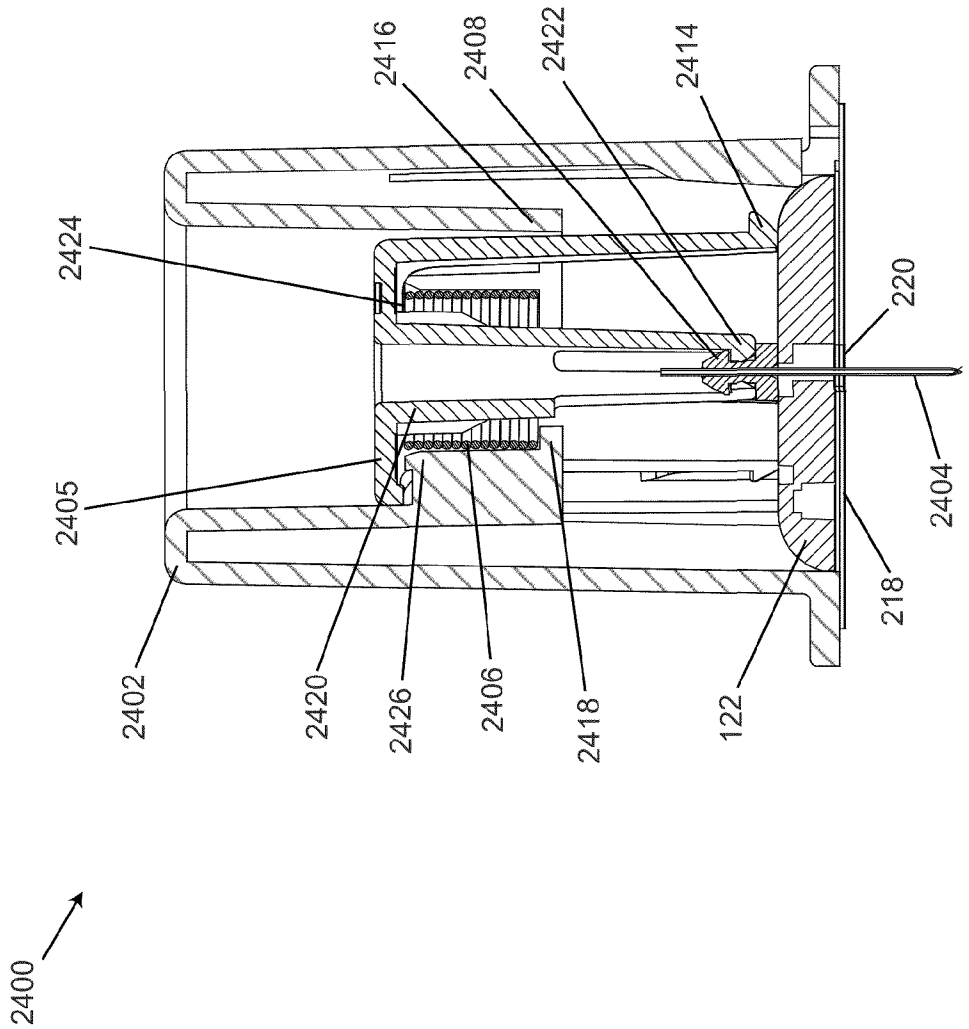
2400
2402
2405
2424
2420
2426
2406
2418
2416
2408
2422
2414
122
218
2404
220

FIG. 63

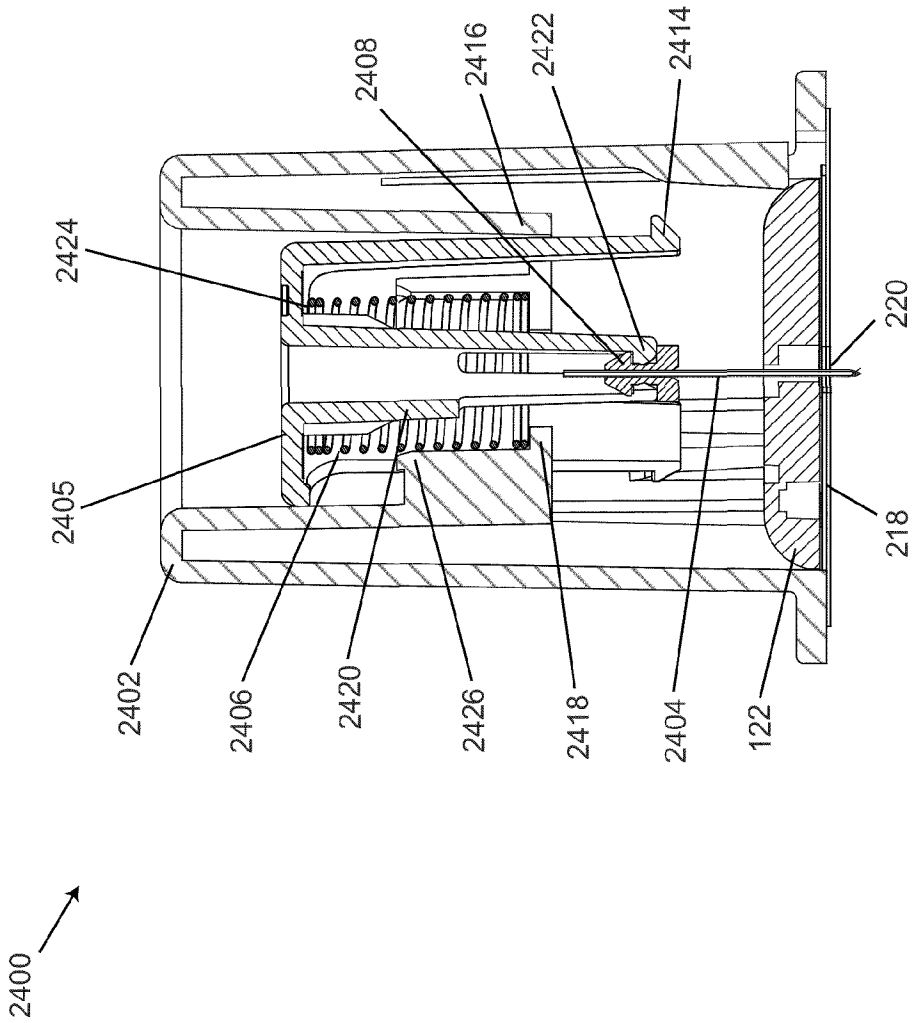
2400
2402
2405
2424
2406
2420
2426
2418
2404
122
218
220
2408
2416
2422
2414

FIG. 64

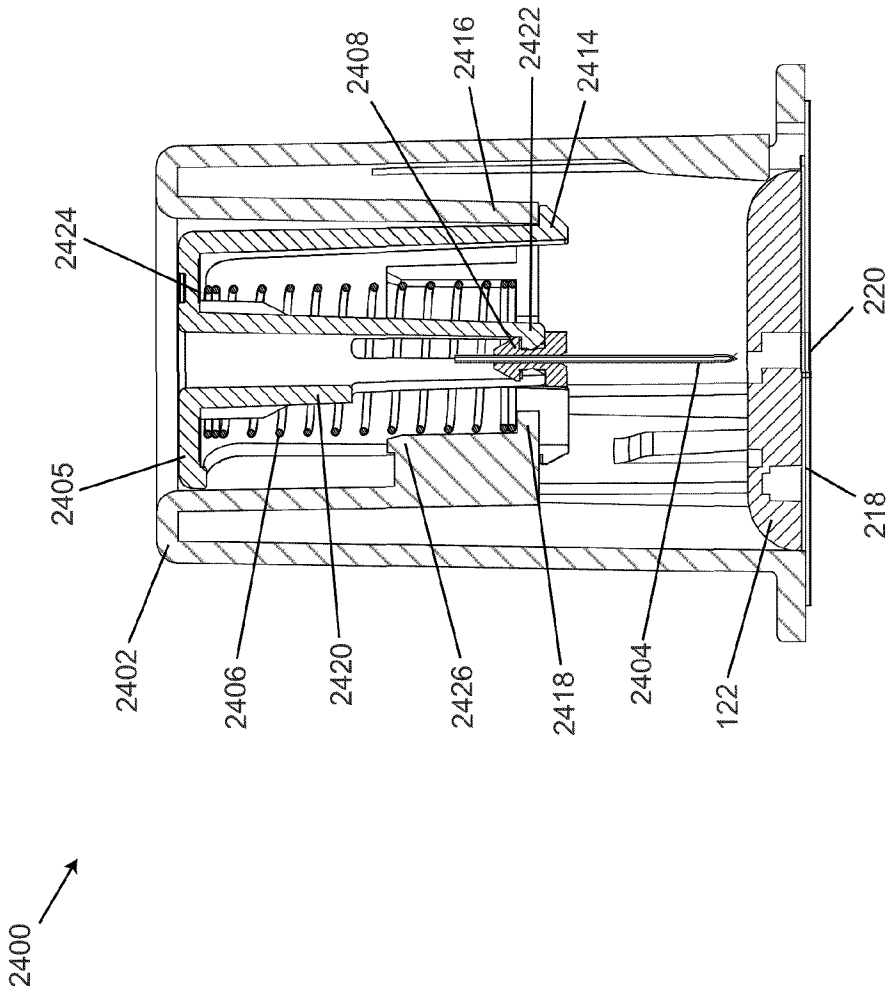
2400
2402
2405
2424
2406
2420
2426
2418
2404
122
218
220
2408
2416
2422
2414

FIG. 65

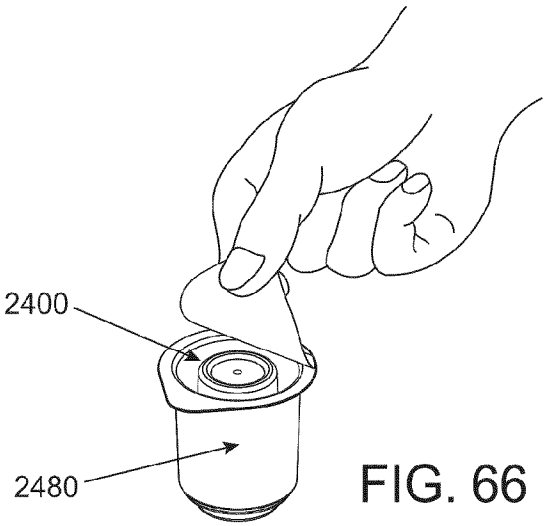

FIG. 66

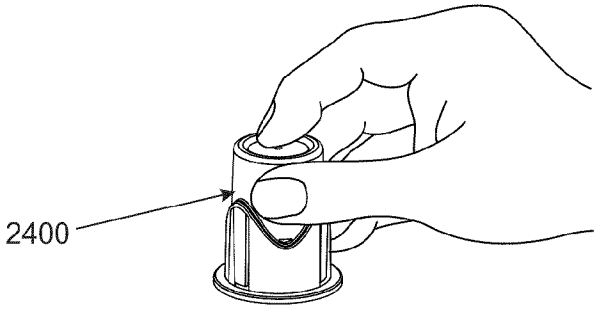

FIG. 67

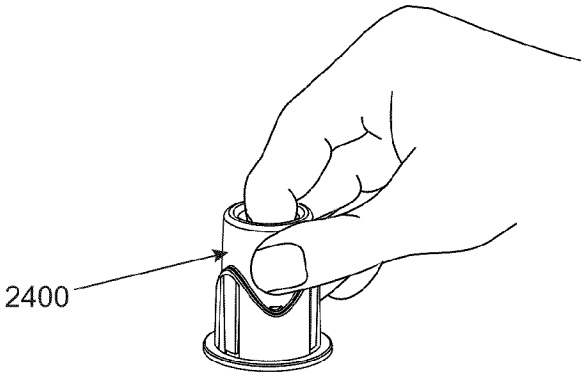

FIG. 68

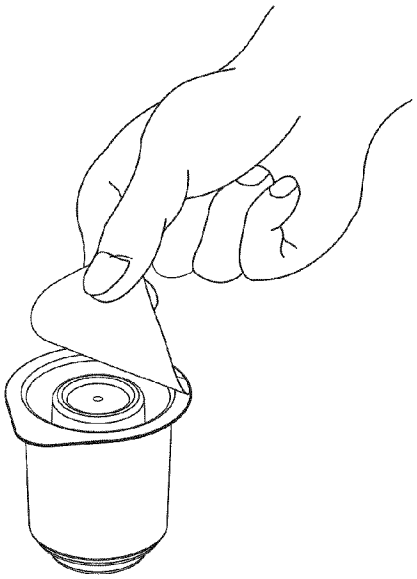

FIG. 69

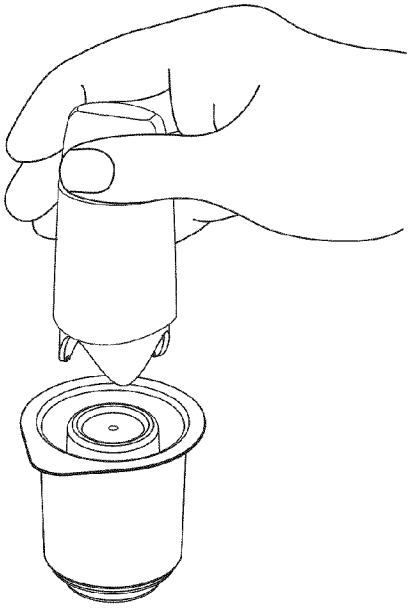

FIG. 70

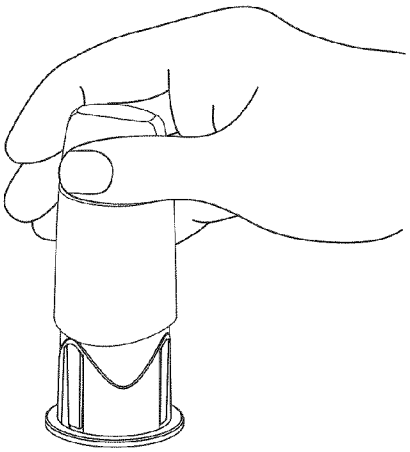

FIG. 71

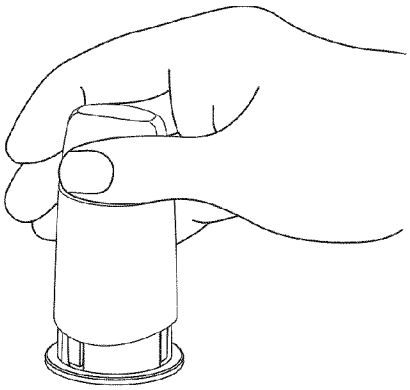

FIG. 72

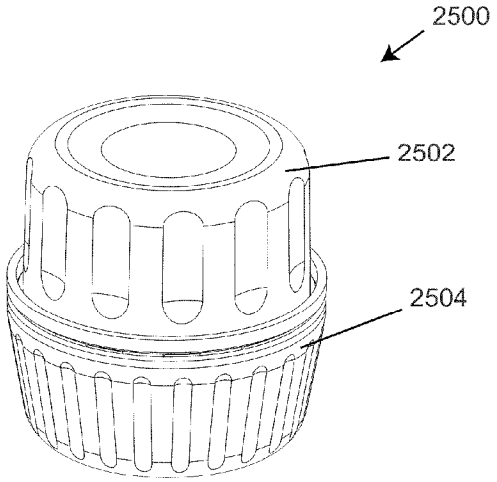

FIG. 73

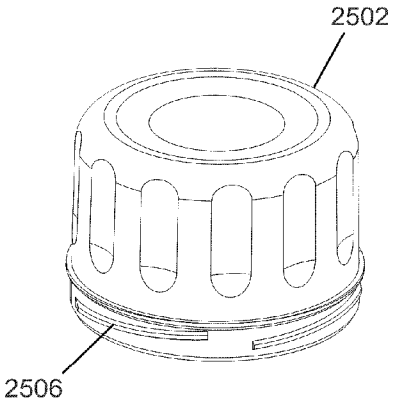

FIG. 74

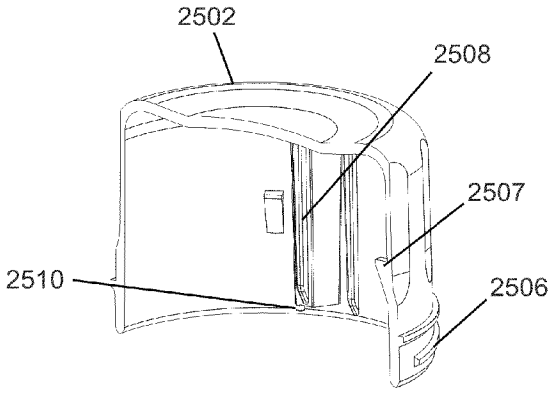

FIG. 75

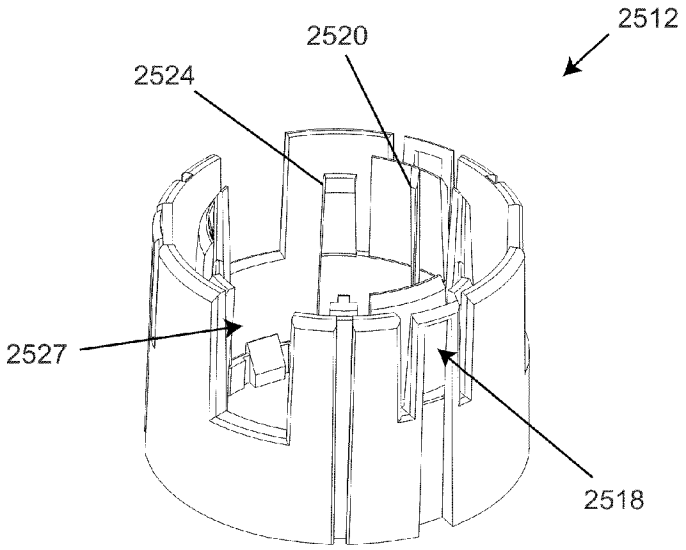

FIG. 76

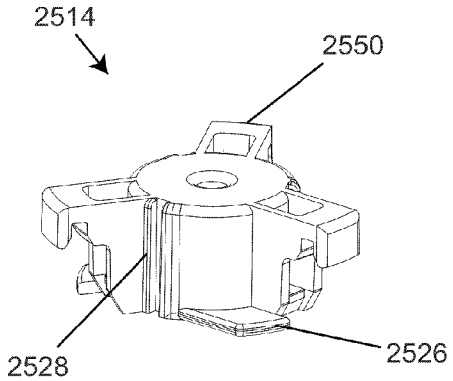

FIG. 77

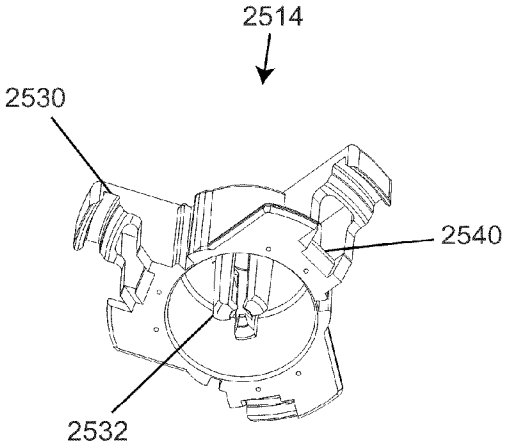

FIG. 78

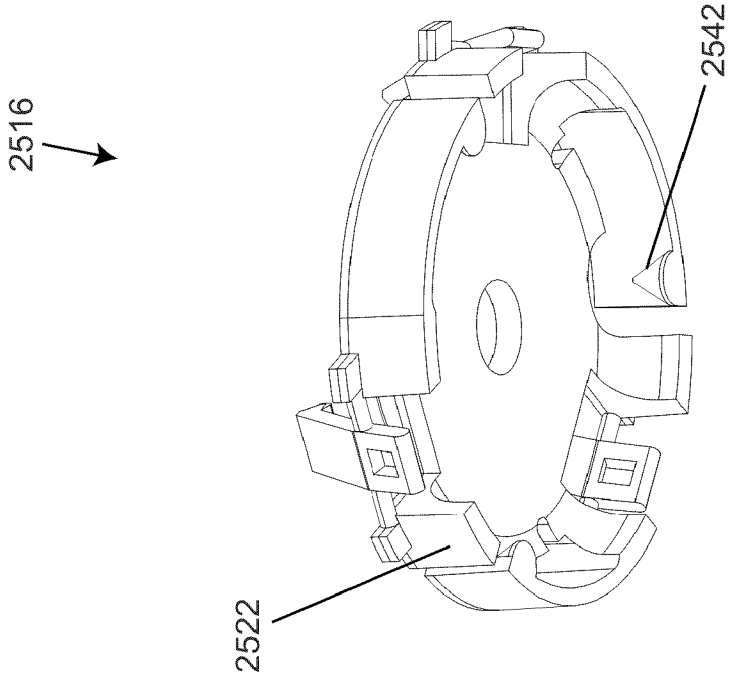

FIG. 80

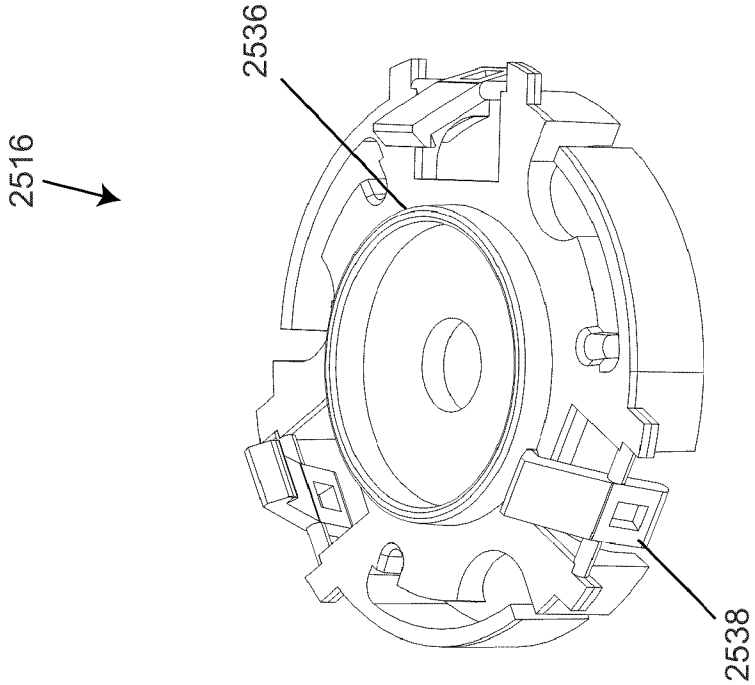

FIG. 79

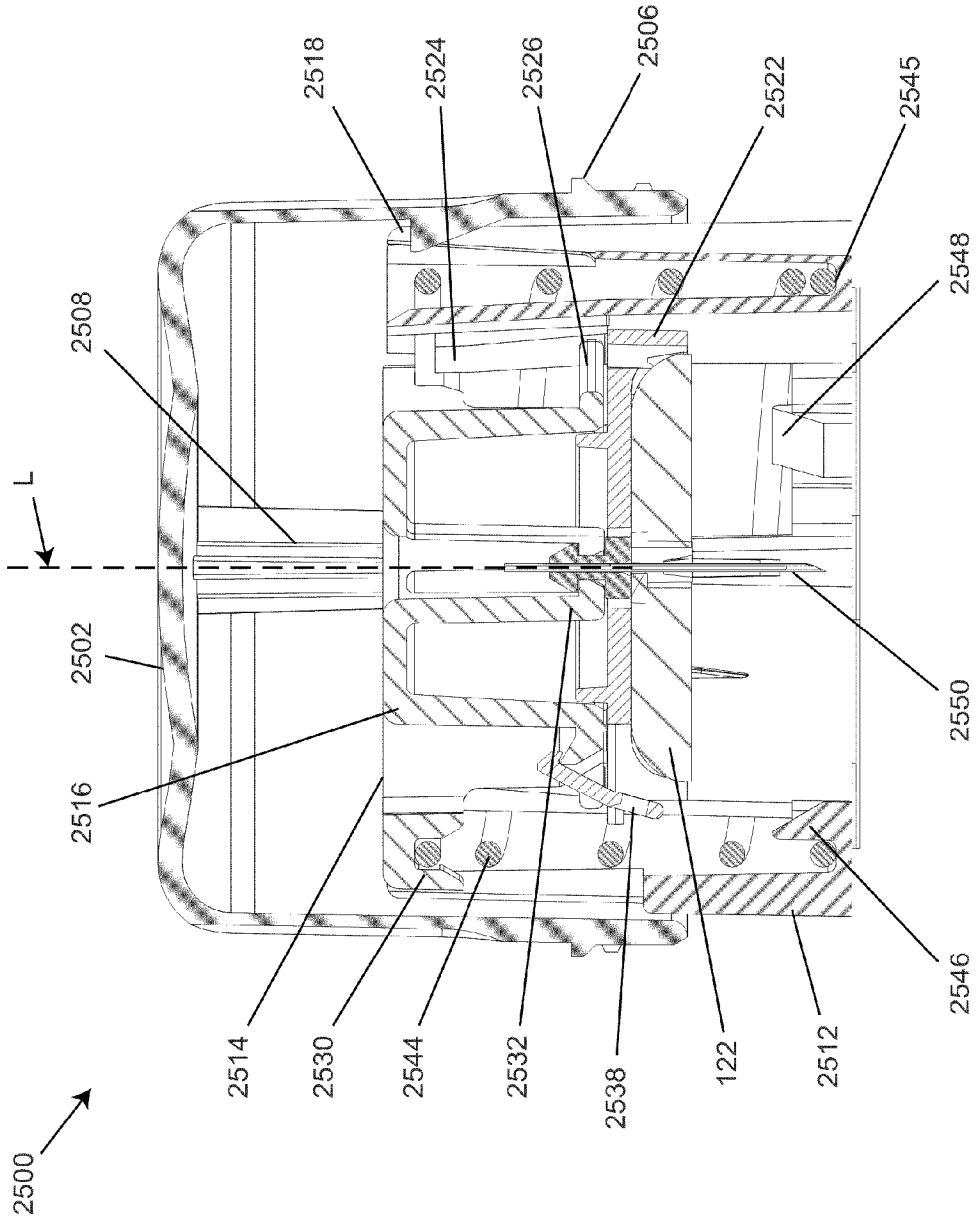
2500
2514
2530
2544
2532
2538
122
2512
2546
2550
2516
2502
L
2508
2518
2524
2526
2506
2522
2545
2548

FIG. 81

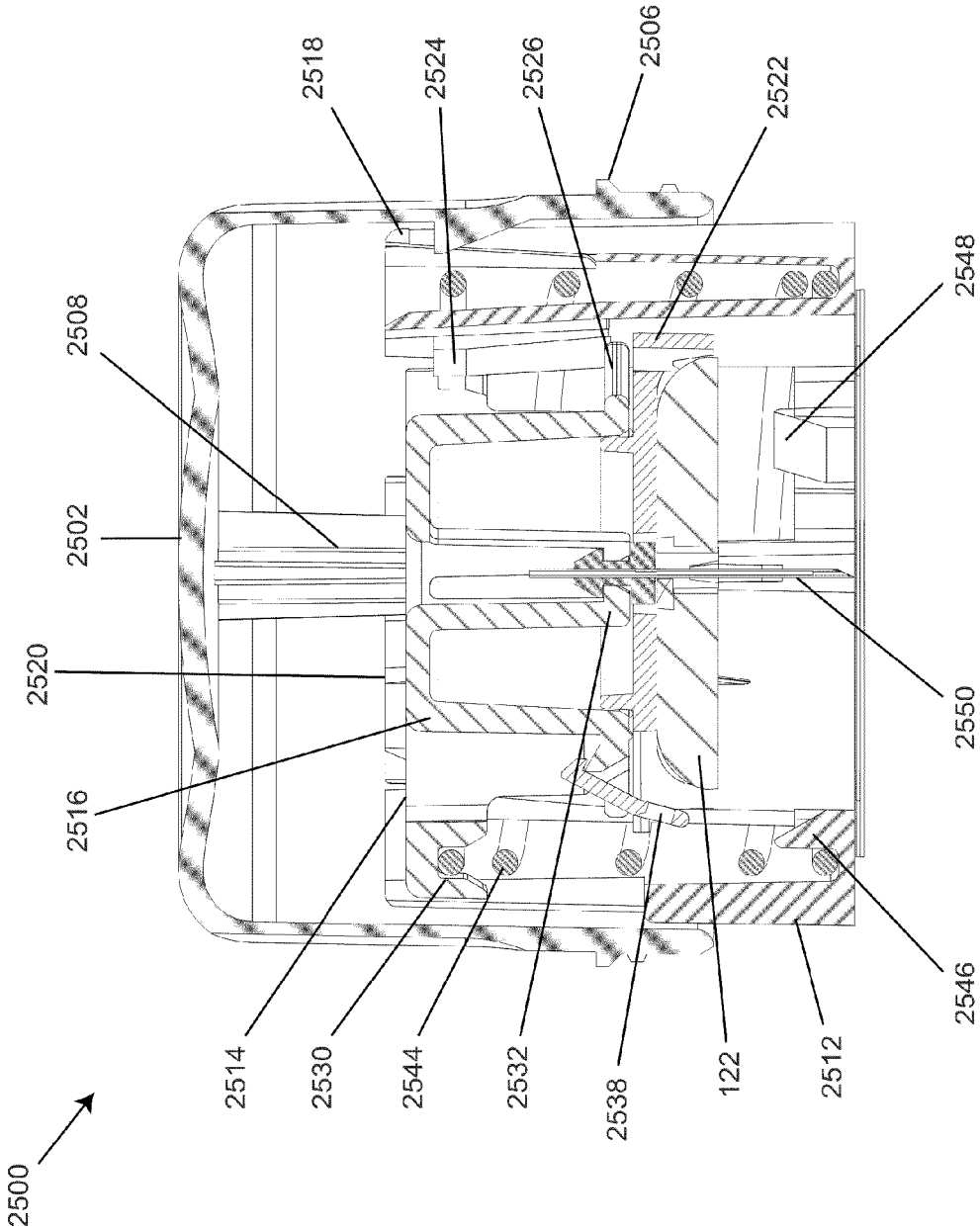
2500
2514
2530
2544
2532
2538
122
2512
2546
2550
2516
2520
2502
2508
2518
2524
2526
2506
2522
2548

FIG. 82

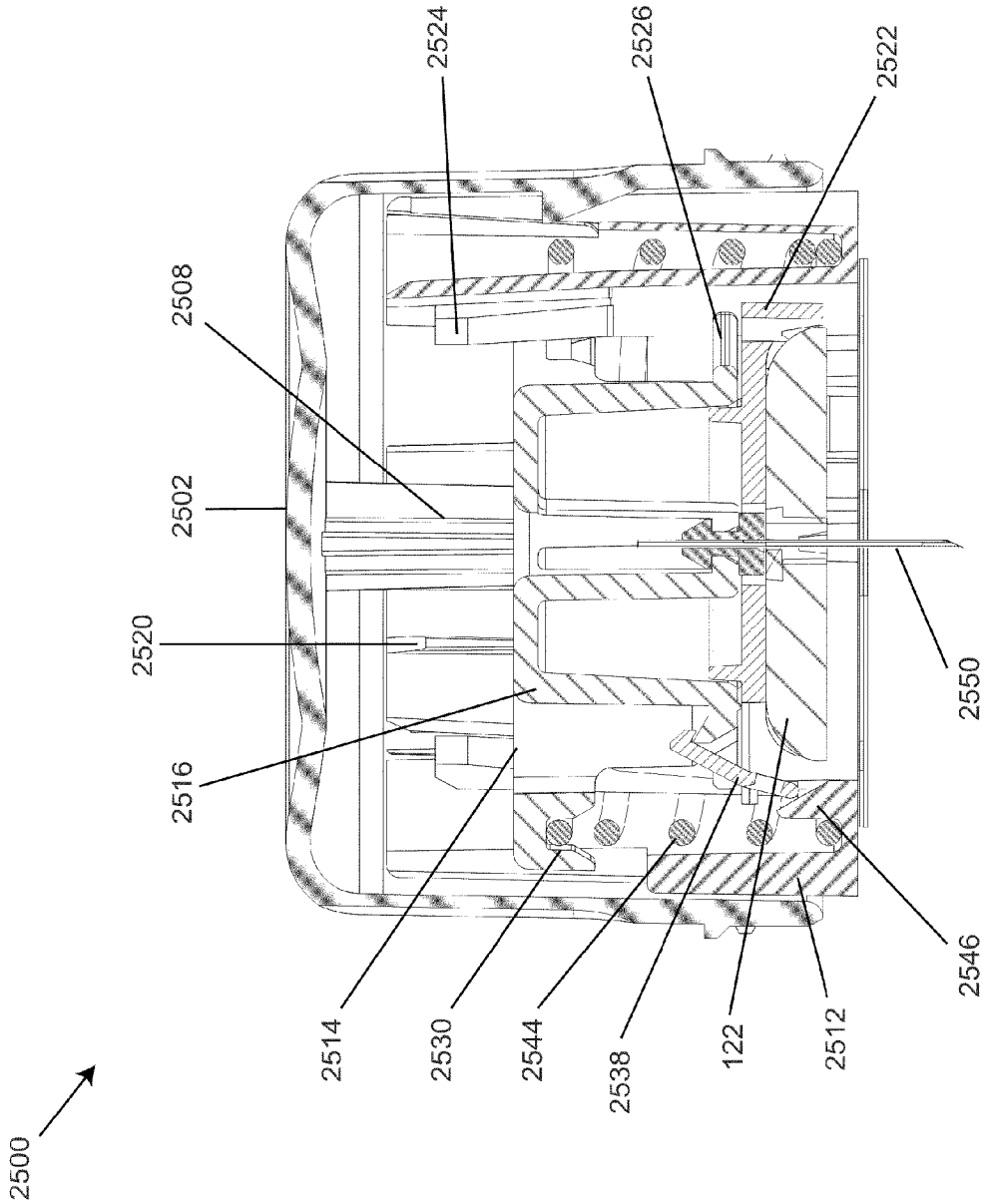
2500
2514
2530
2544
2538
122
2512
2546
2516
2520
2502
2508
2524
2526
2522
2550

FIG. 83

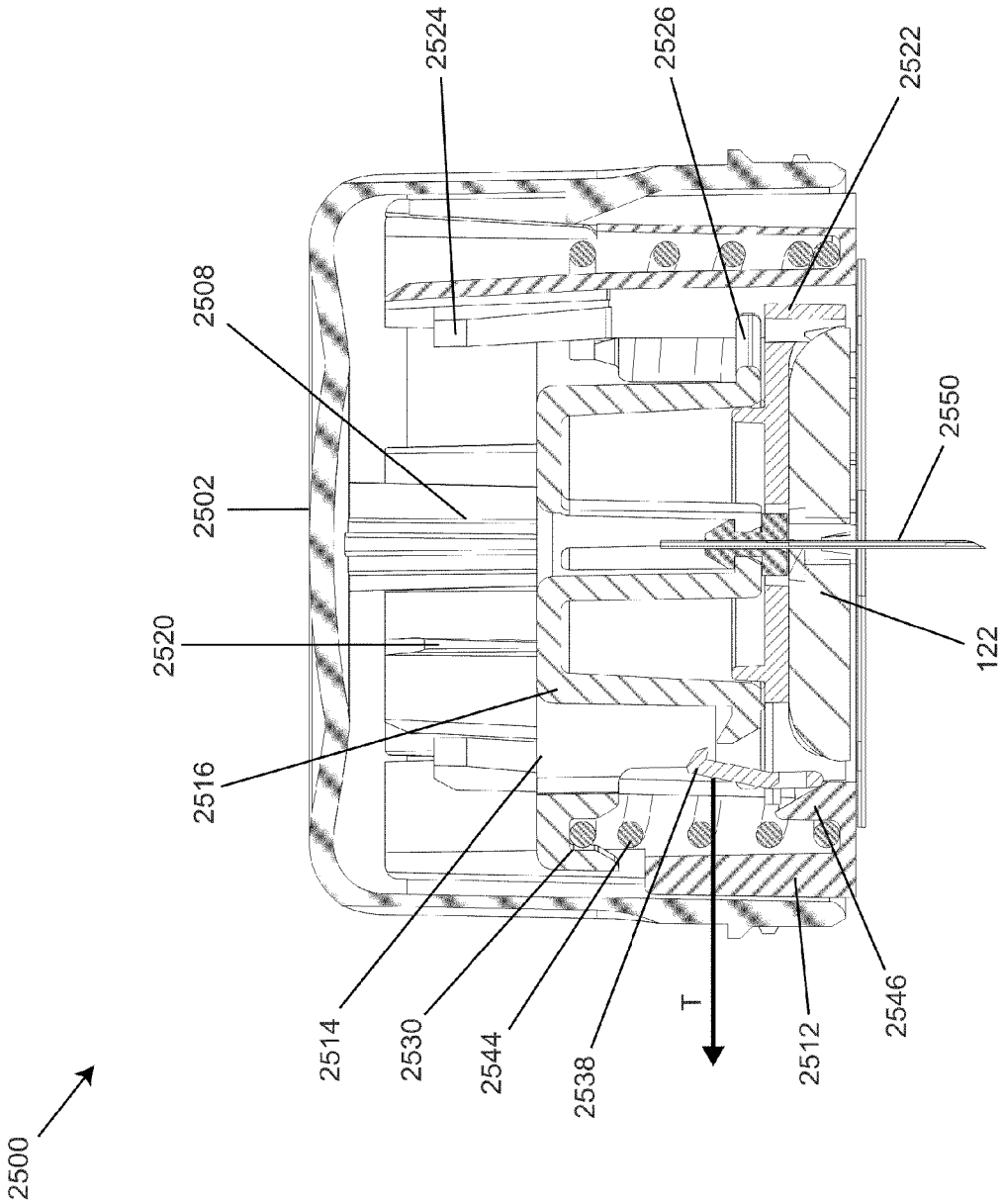
2500
2514
2530
2544
2538
T
2512
2546
2516
2520
2502
2508
2524
2526
2522
2550
122

FIG. 84

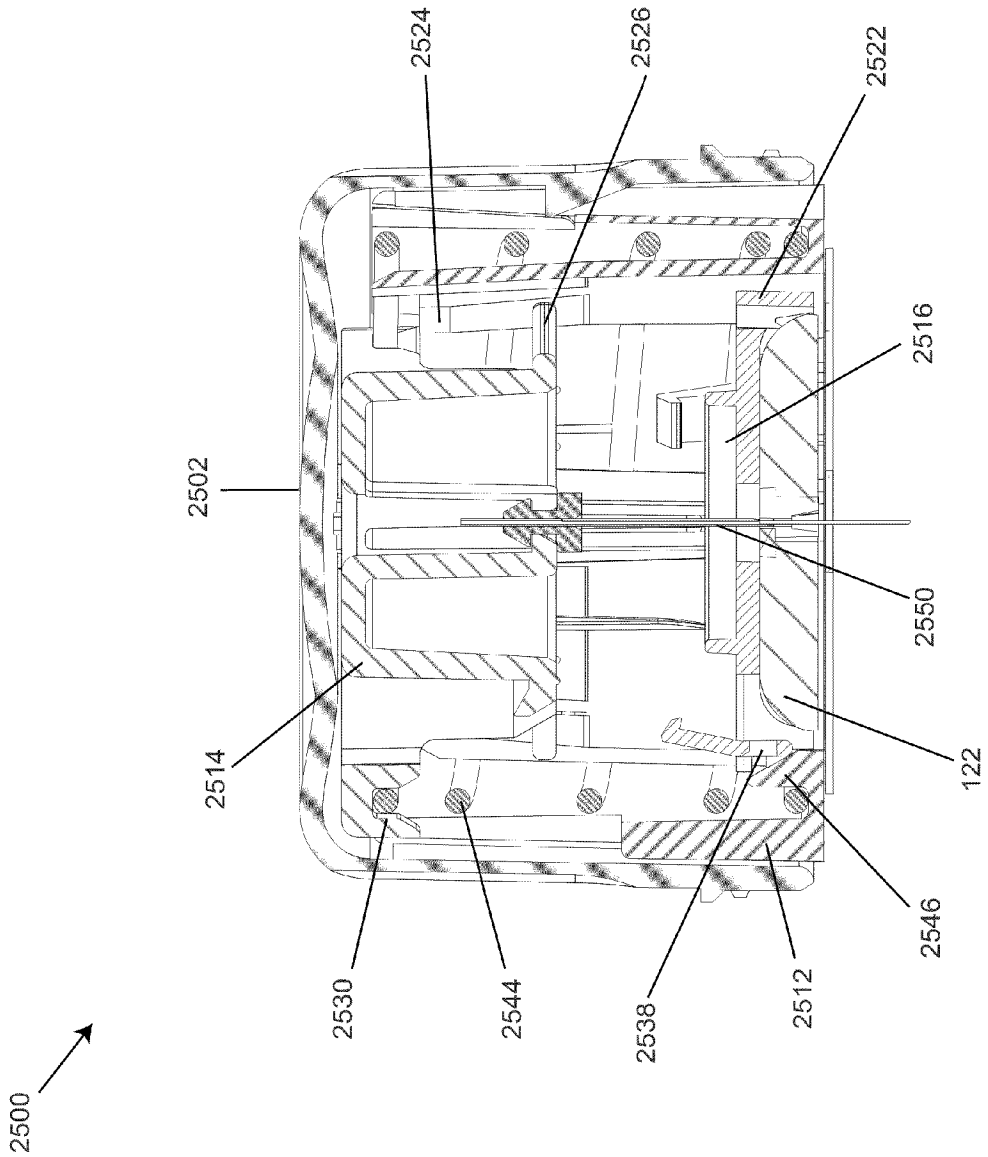
2524
2526
2522
2516
2502
2550
2514
122
2546
2530
2544
2538
2512
2500

FIG. 85

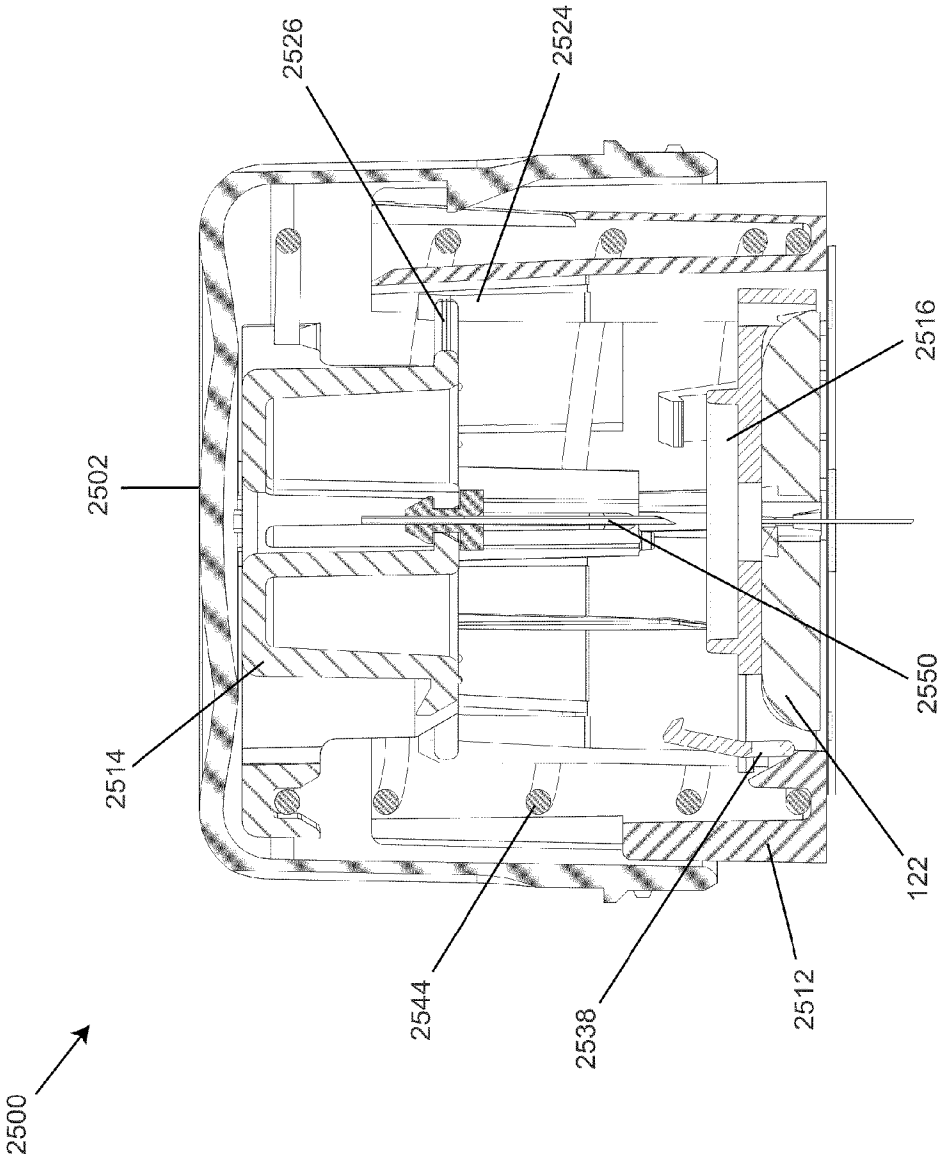

FIG. 86

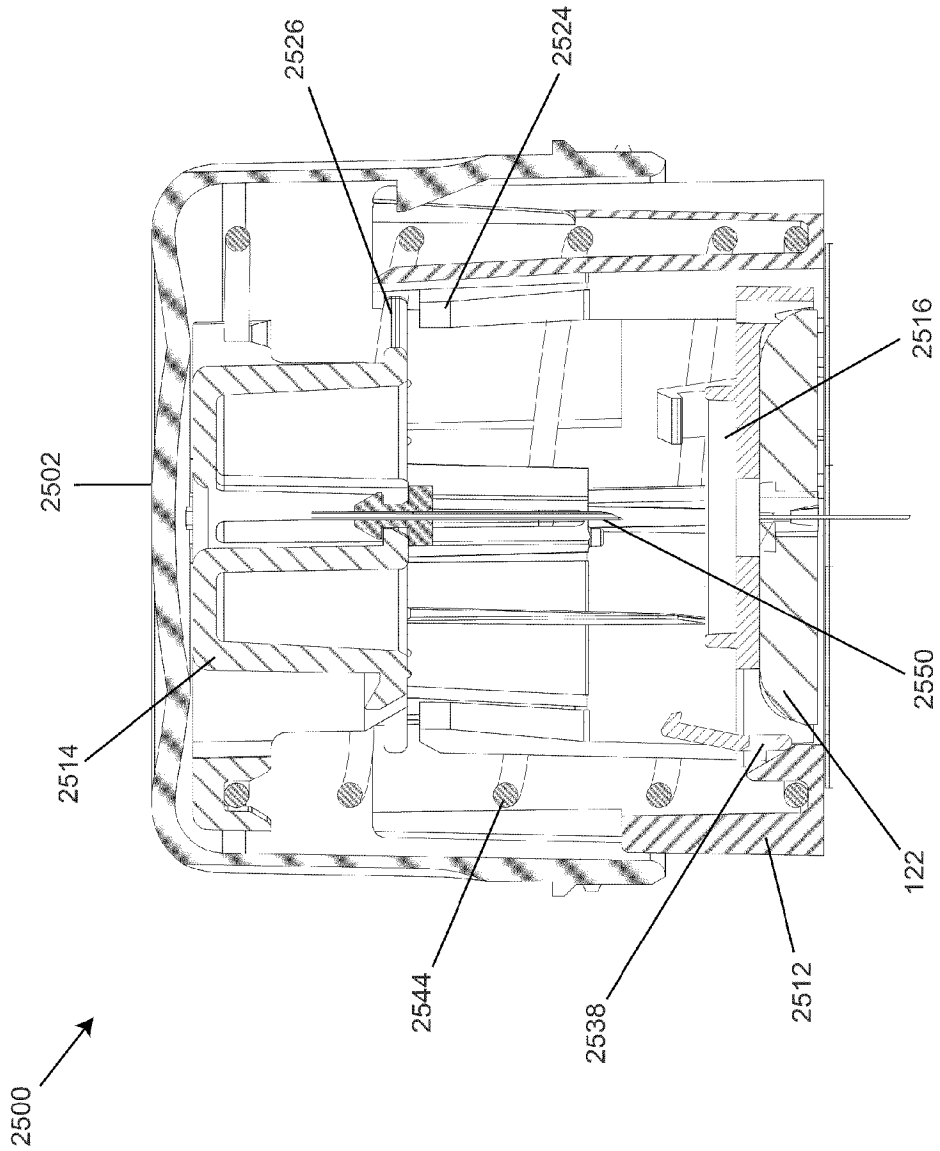

FIG. 87

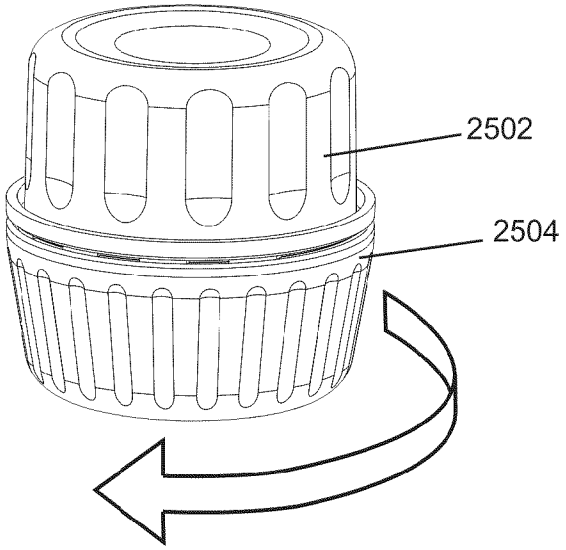

FIG. 88

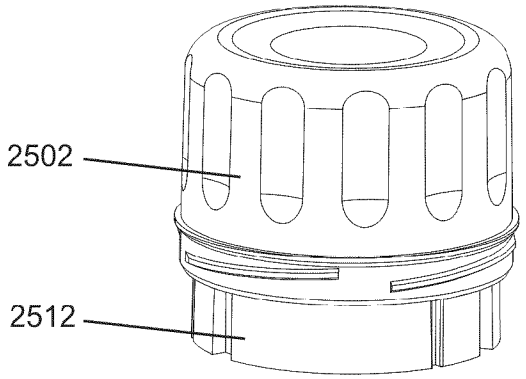

FIG. 89

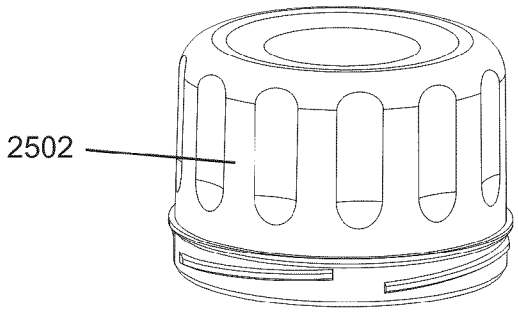

FIG. 90

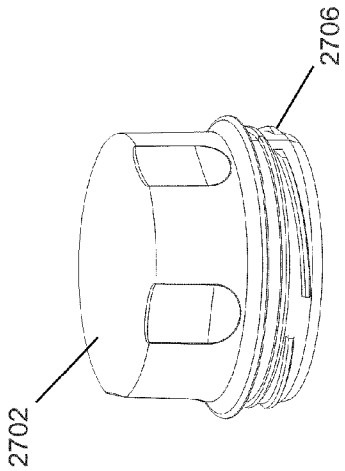

FIG. 92

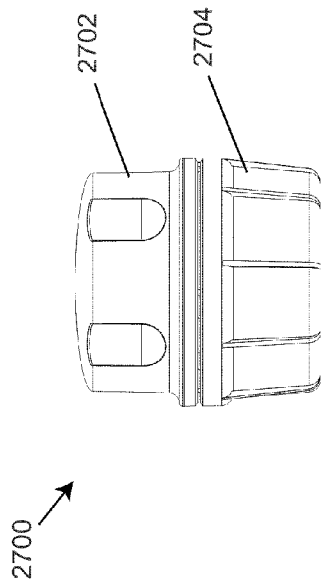

FIG. 91

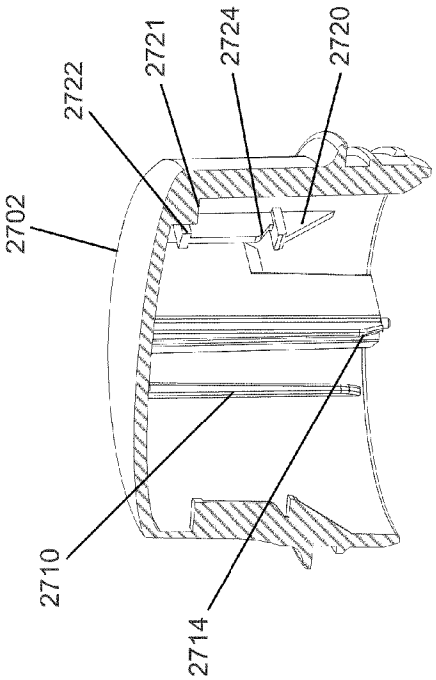

FIG. 93

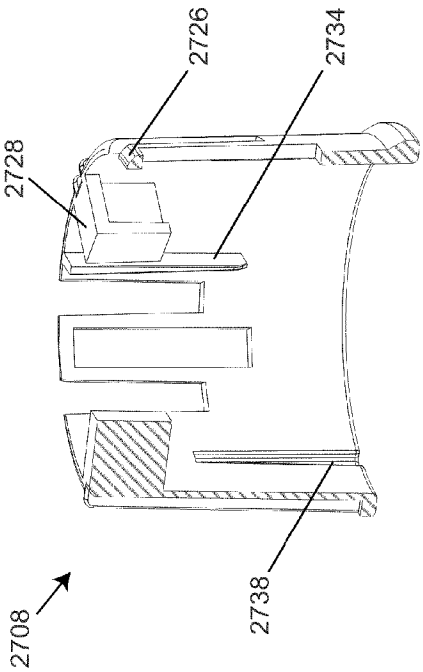

FIG. 95

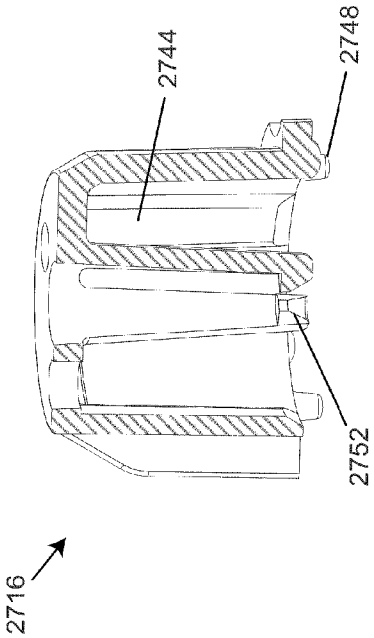

FIG. 97

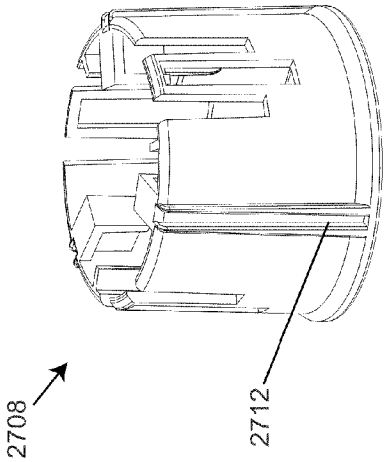

FIG. 94

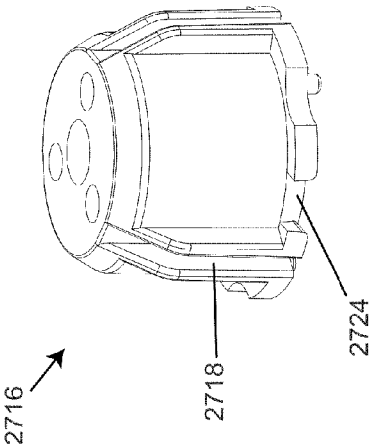

FIG. 96

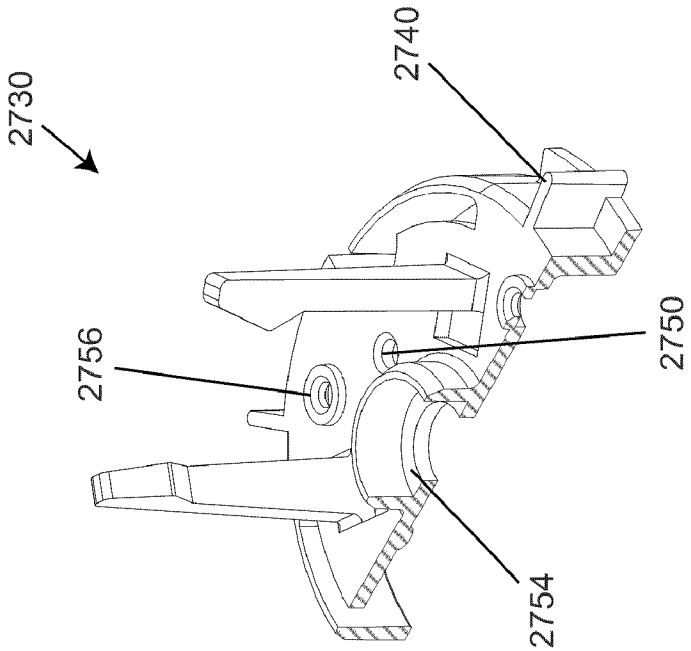

FIG. 99

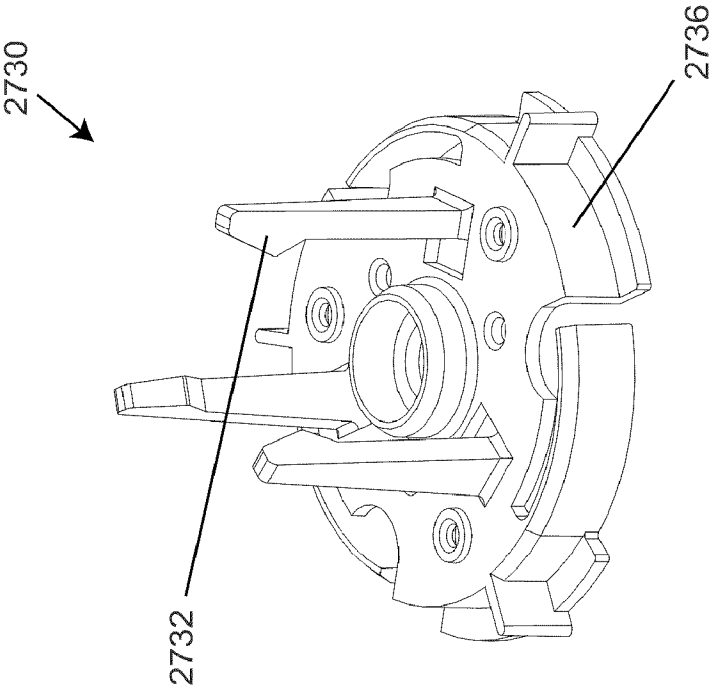

FIG. 98

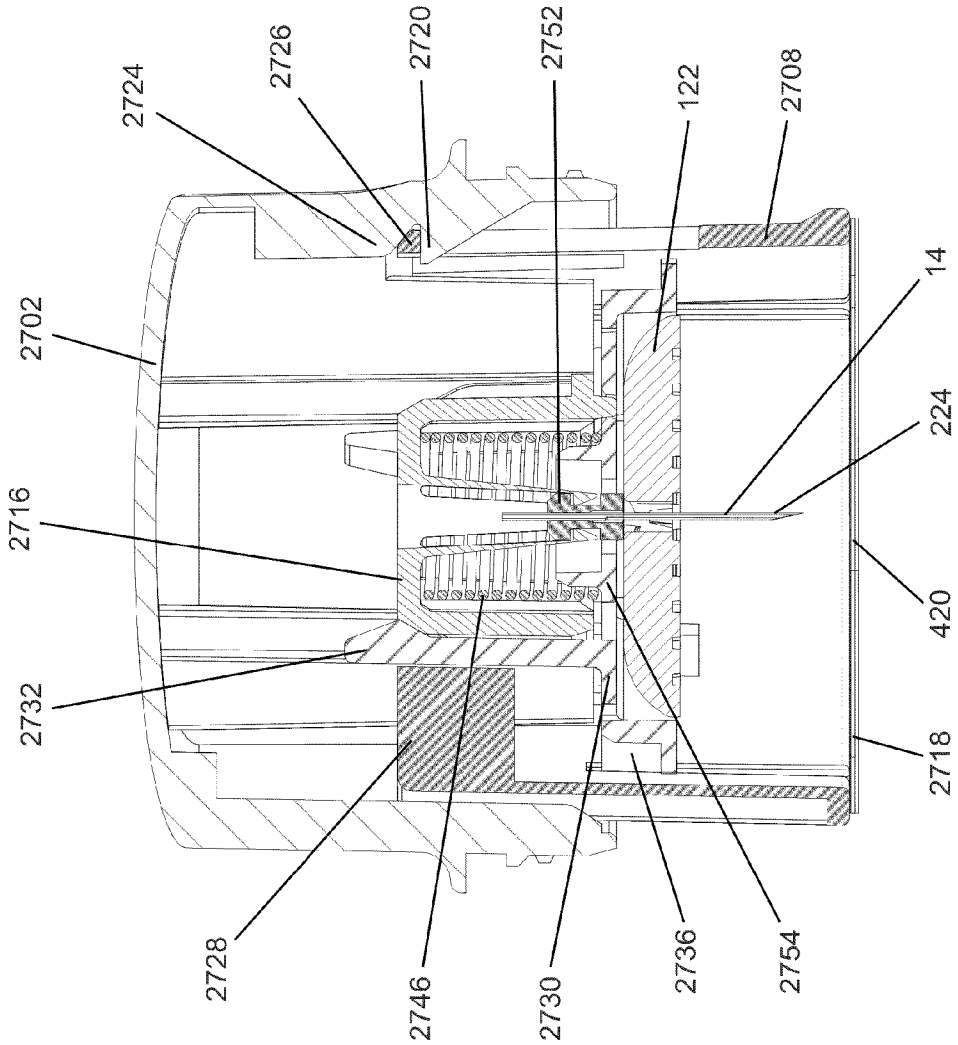
2724
2726
2720
2752
122
2708
2702
14
224
2716
420
2732
2718
2728
2746
2730
2736
2754

FIG. 100

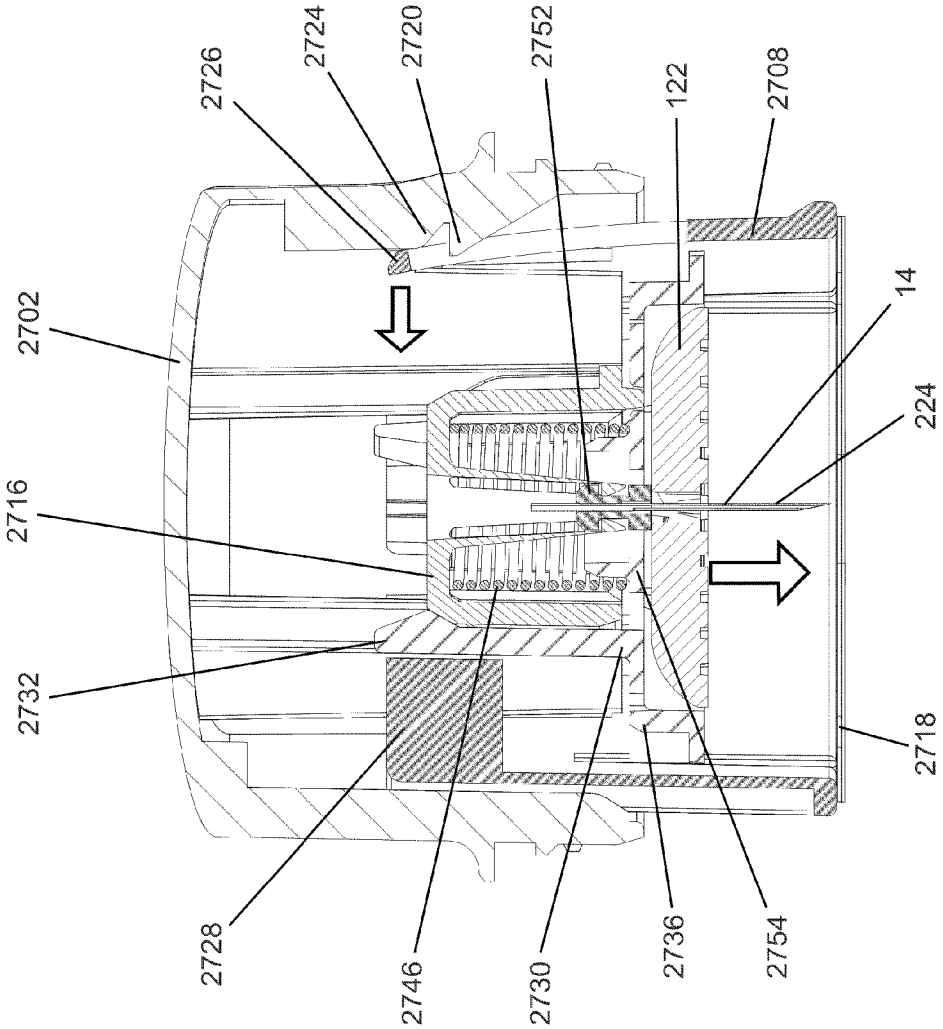
2702
2716
2732
2728
2726
2724
2720
2746
2752
2730
122
2736
2754
2708
14
224
2718

FIG. 101

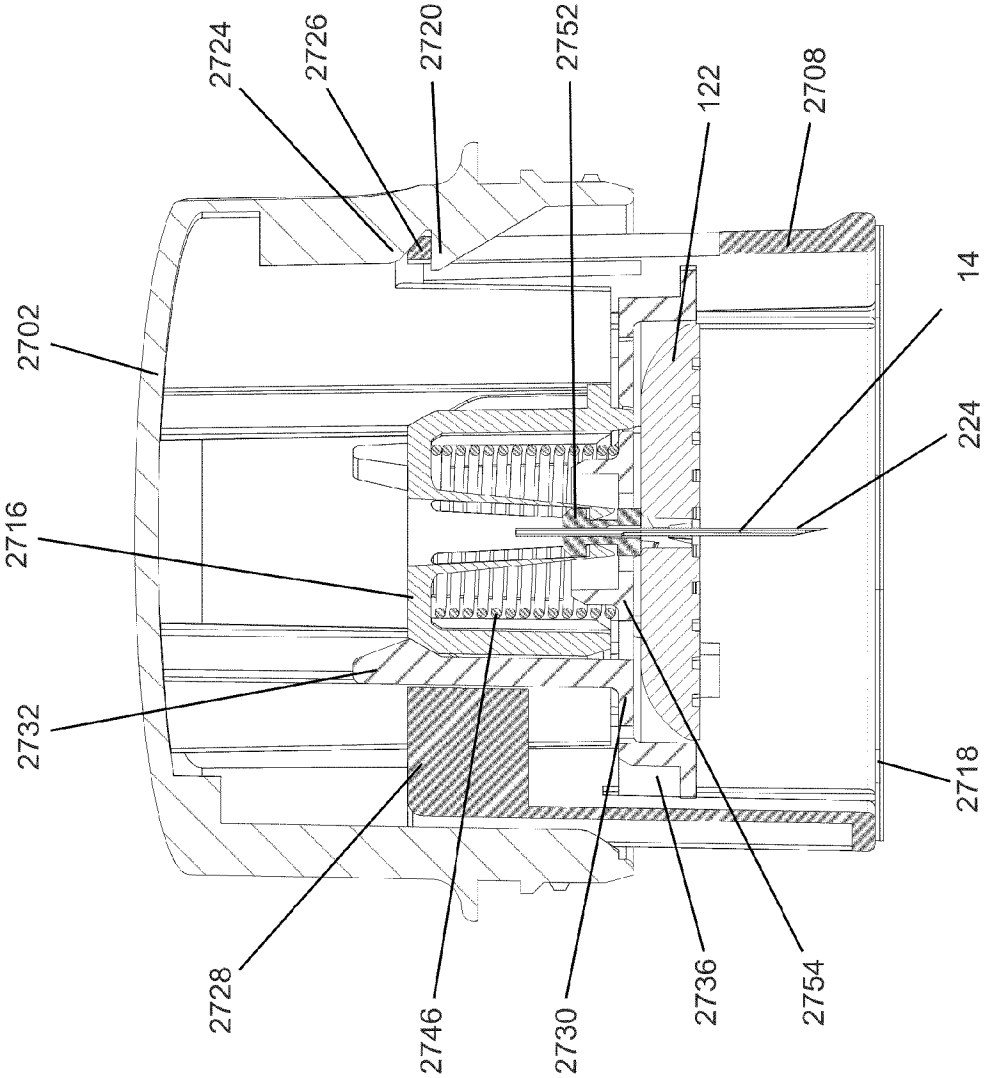
2724
2726
2720
2752
122
2708
2702
14
224
2716
2732
2718
2728
2746
2730
2736
2754

FIG. 102

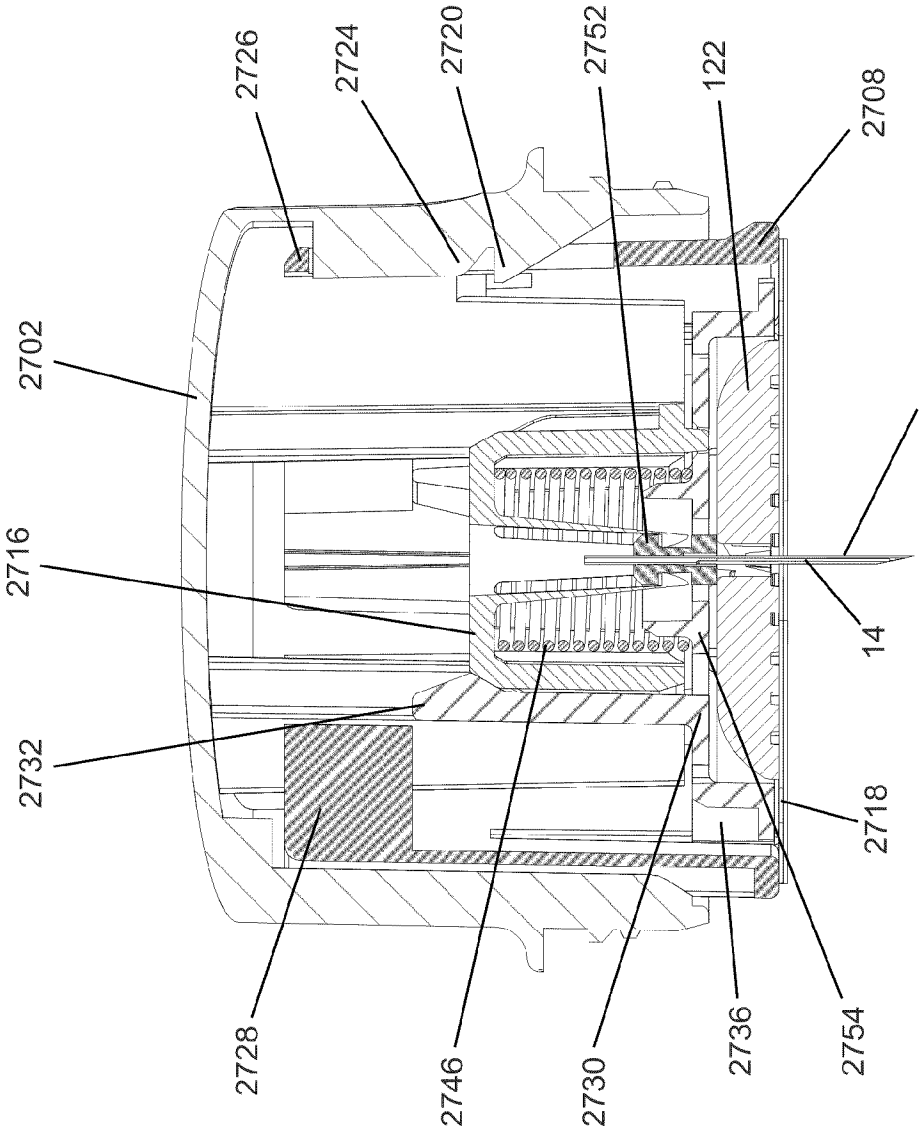
2726
2724
2720
2752
122
2708
2702
224
2716
14
2732
2718
2728
2746
2730
2736
2754

FIG. 103

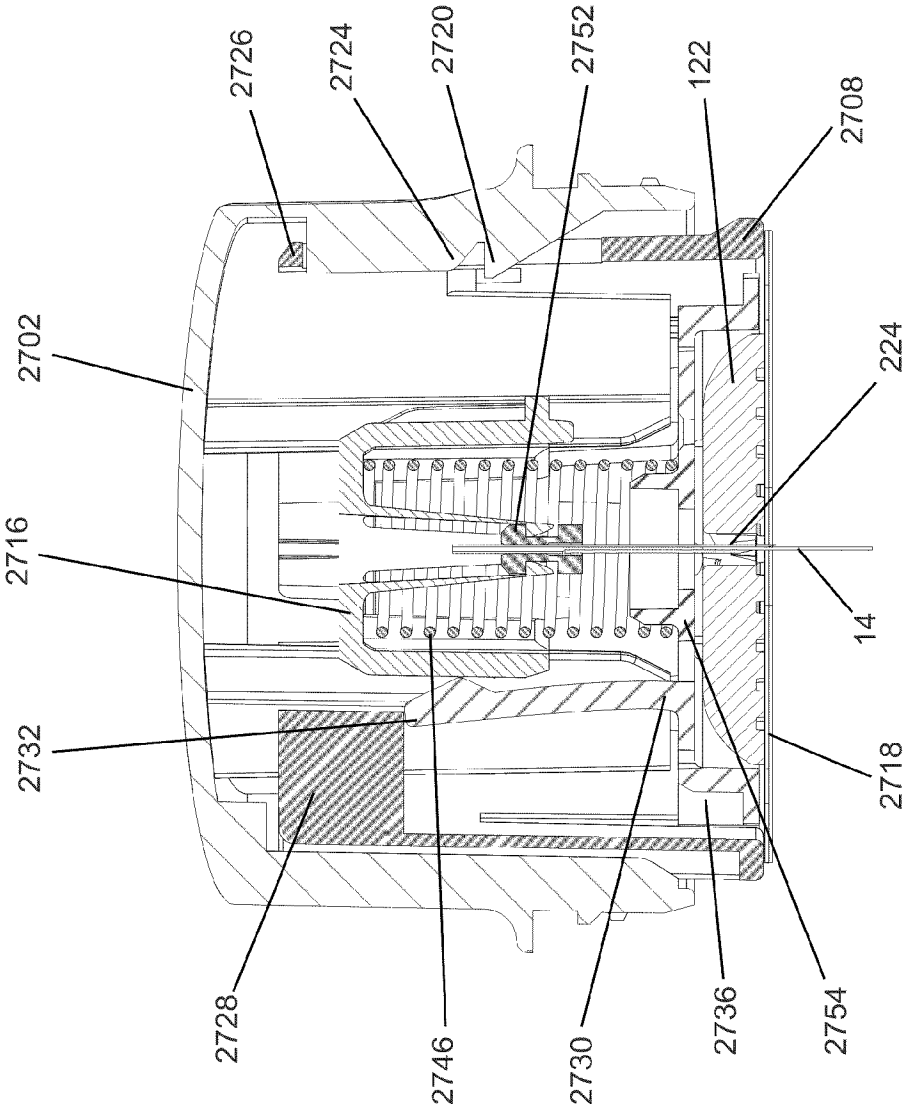
2726
2724
2720
2752
122
2708
2702
224
2716
14
2732
2718
2728
2746
2730
2736
2754

FIG. 104

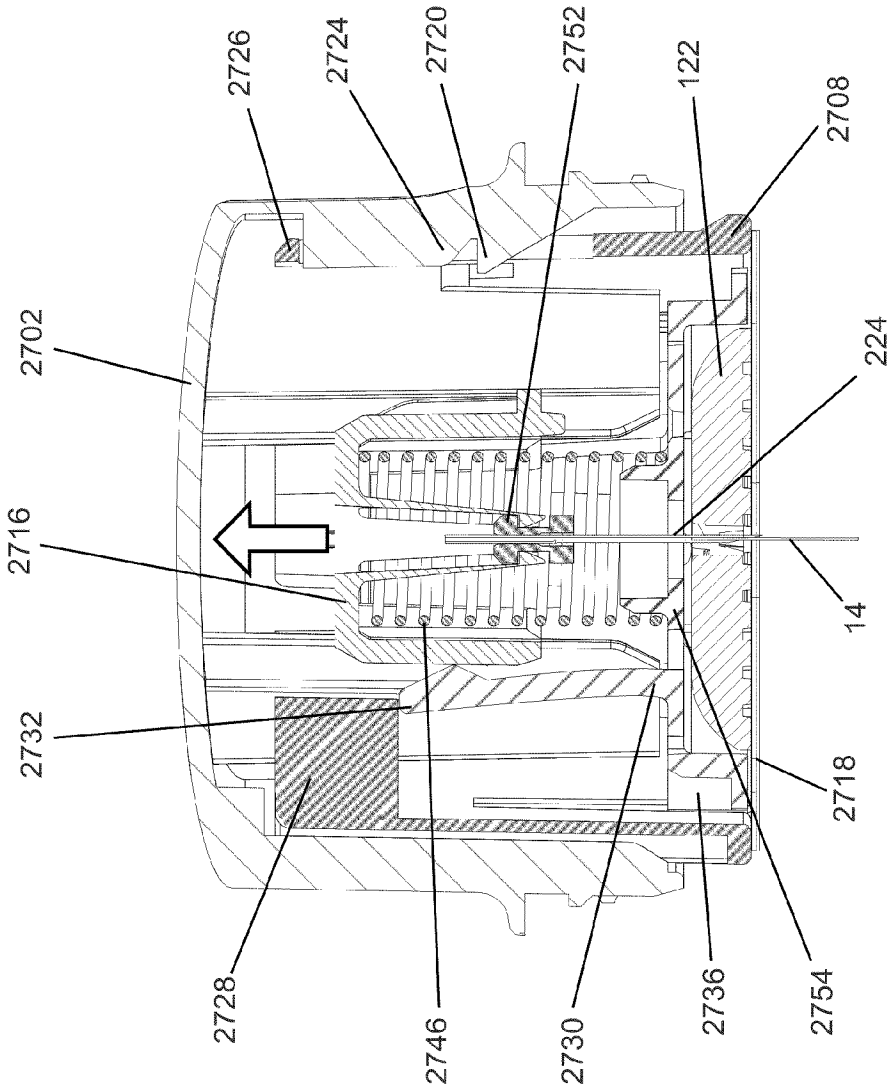
2726
2724
2720
2752
122
2708
2702
224
2716
14
2732
2718
2728
2746
2730
2736
2754

FIG. 105

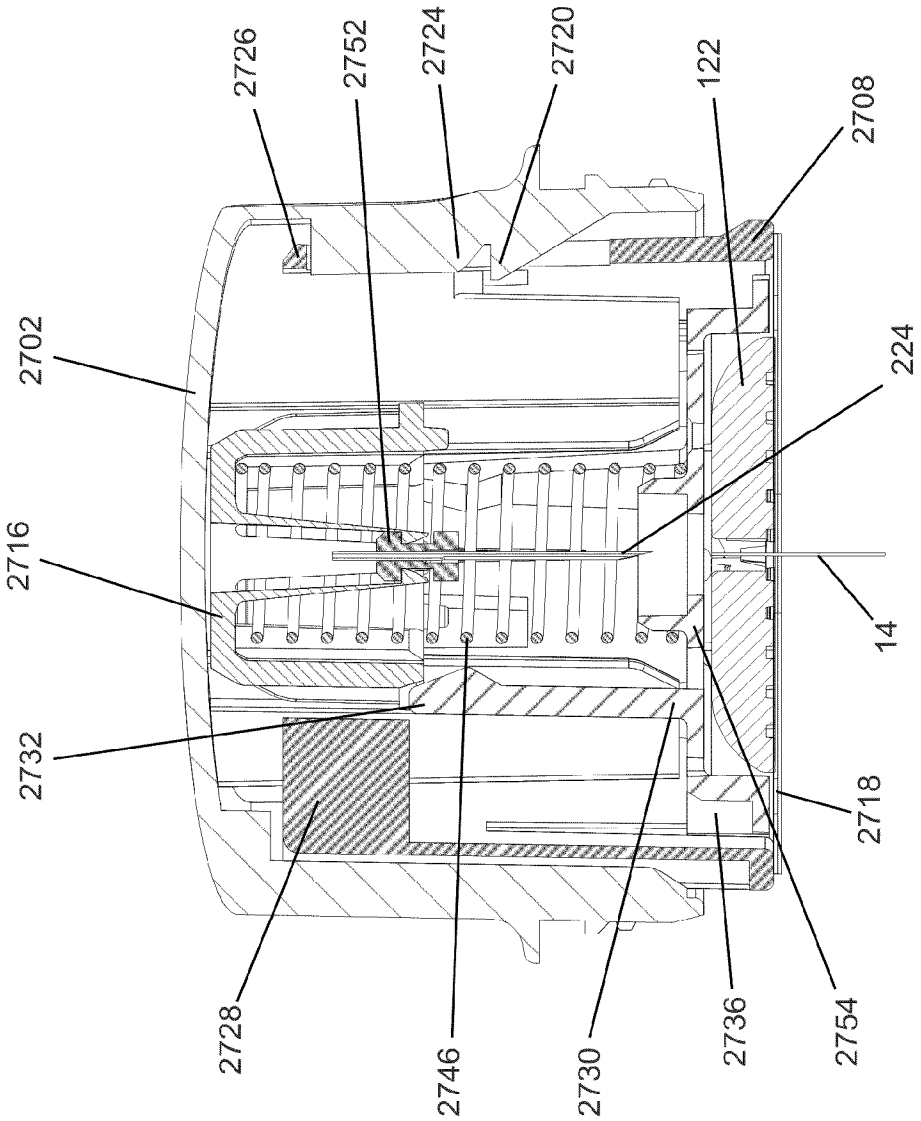
2702
2716
2732
2728
2726
2752
2746
2724
2720
2730
122
2736
2708
224
2754
14
2718

FIG. 106

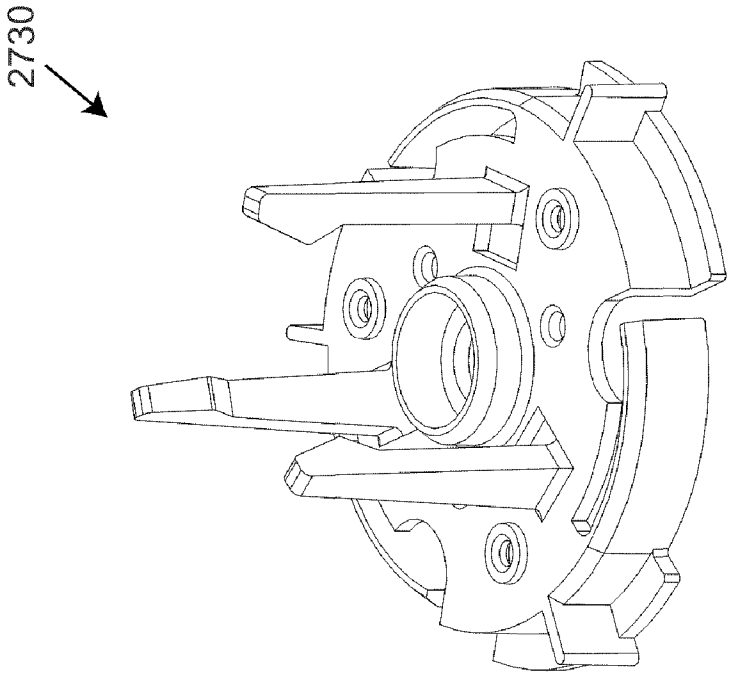

FIG. 108

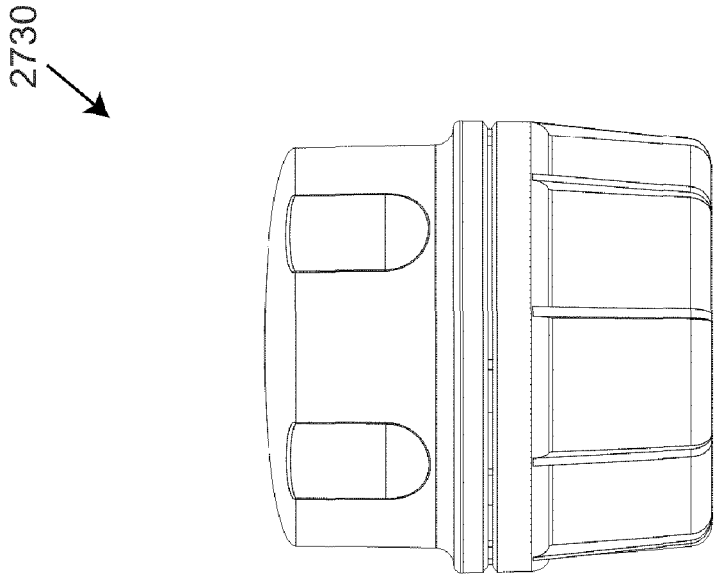

FIG. 107

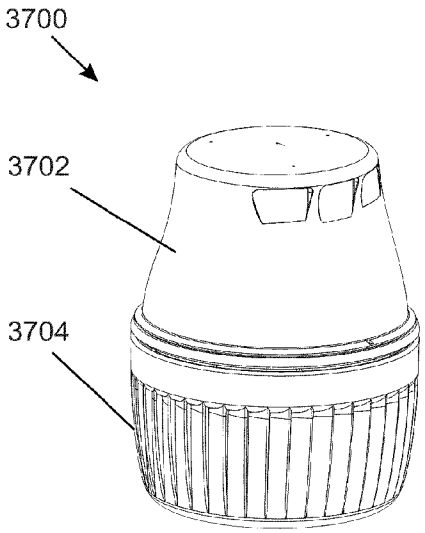

FIG. 109

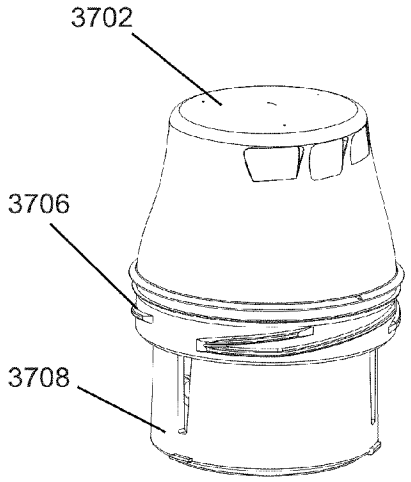

FIG. 110

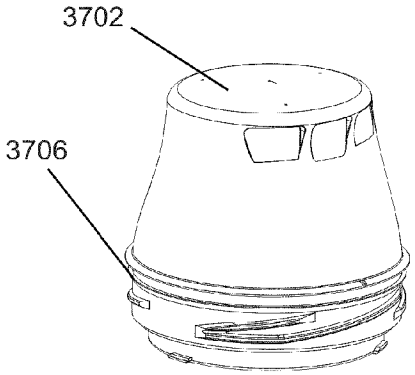

FIG. 111

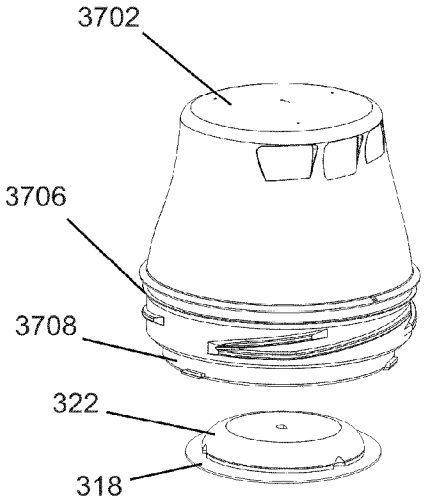

FIG. 112

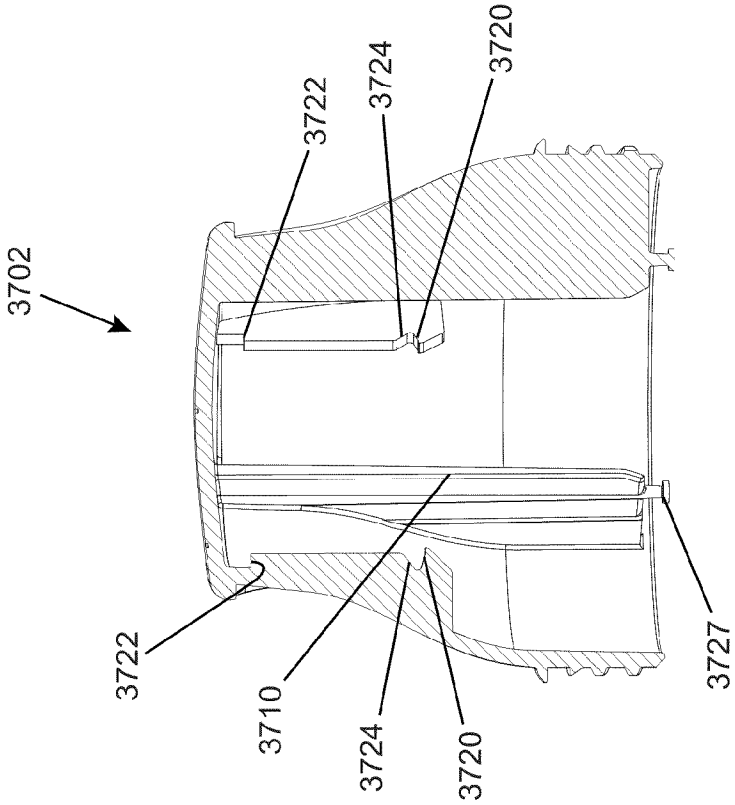

FIG. 114

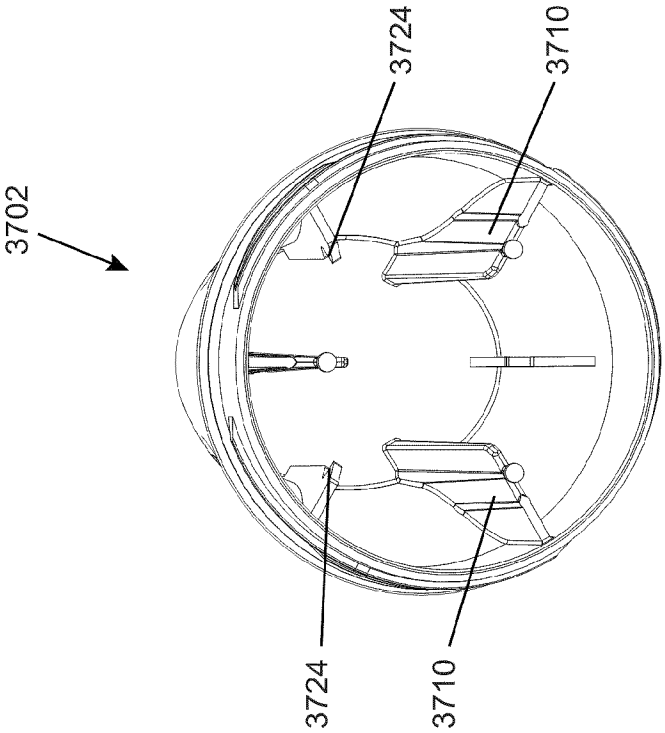

FIG. 113

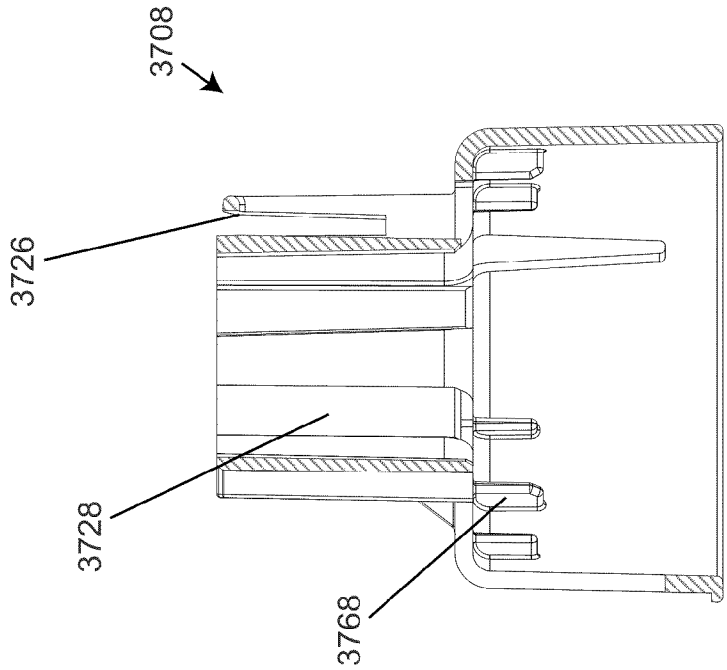

FIG. 116

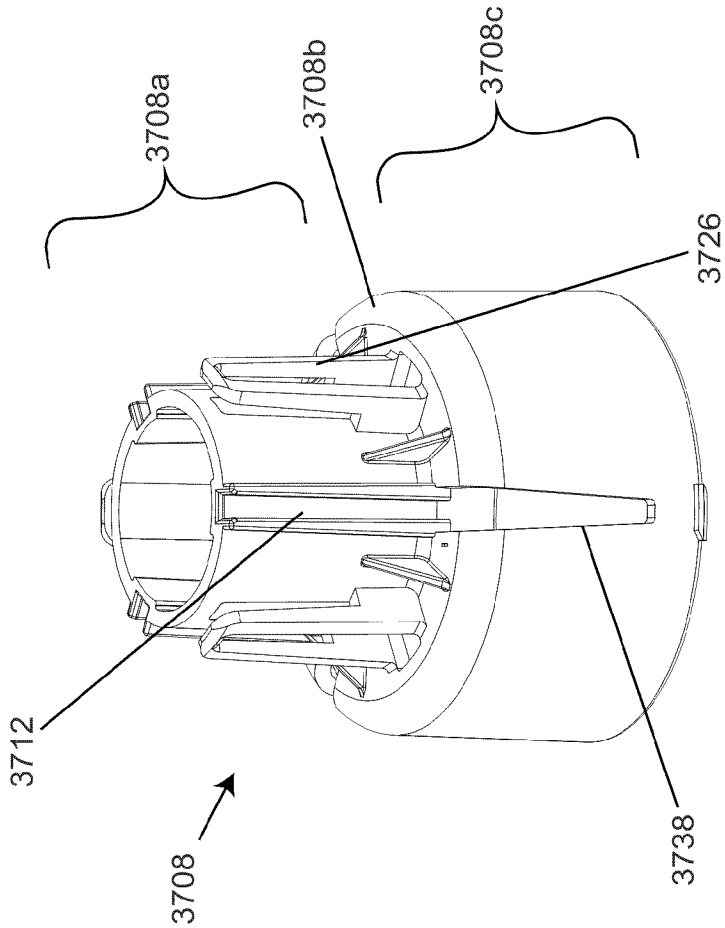

FIG. 115

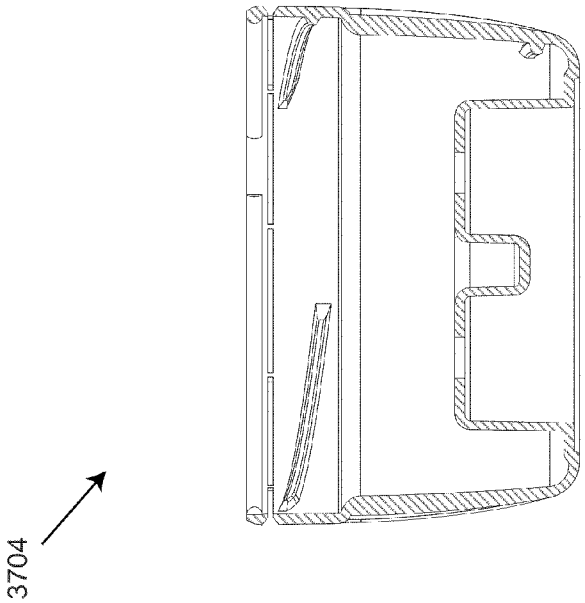

FIG. 119

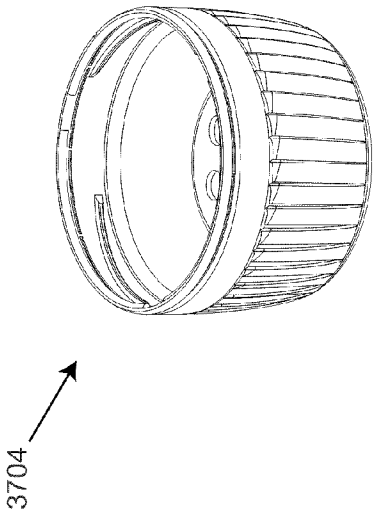

FIG. 117

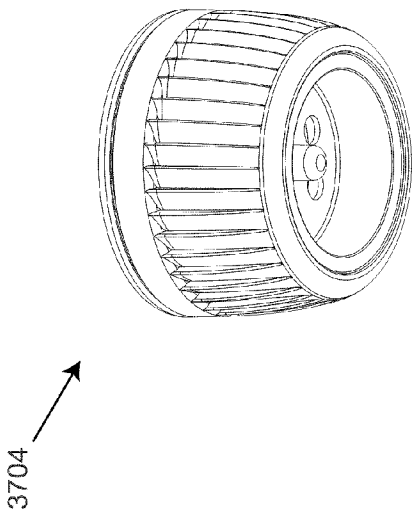

FIG. 118

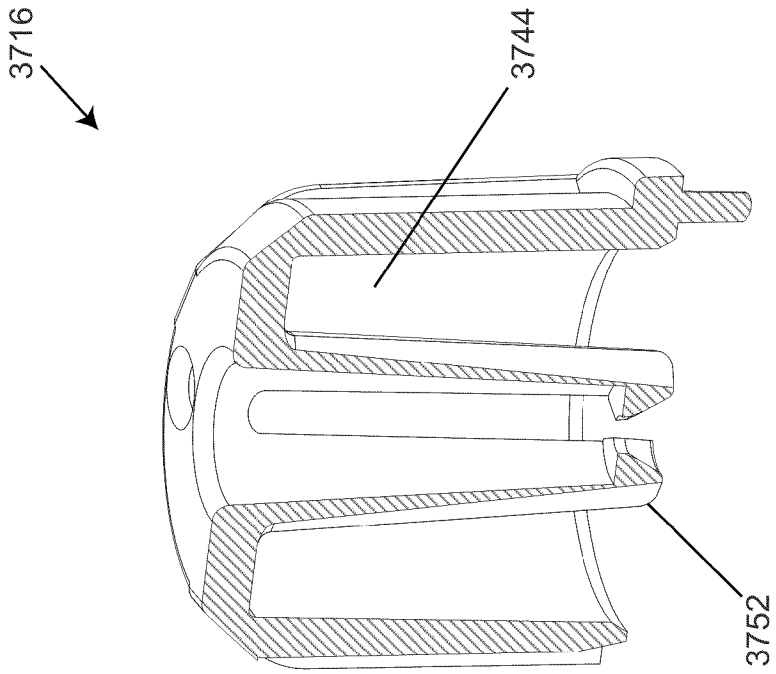

FIG. 121

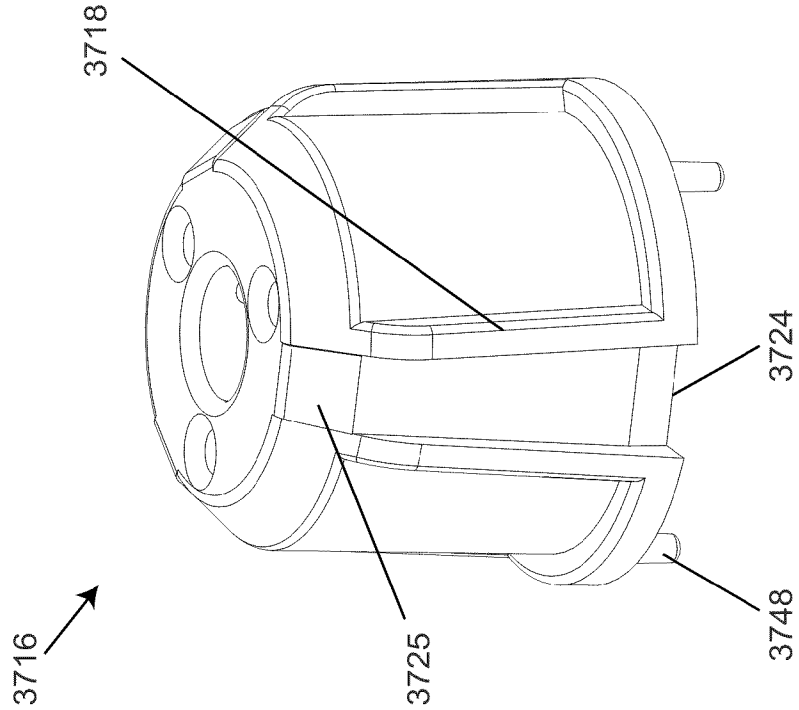

FIG. 120

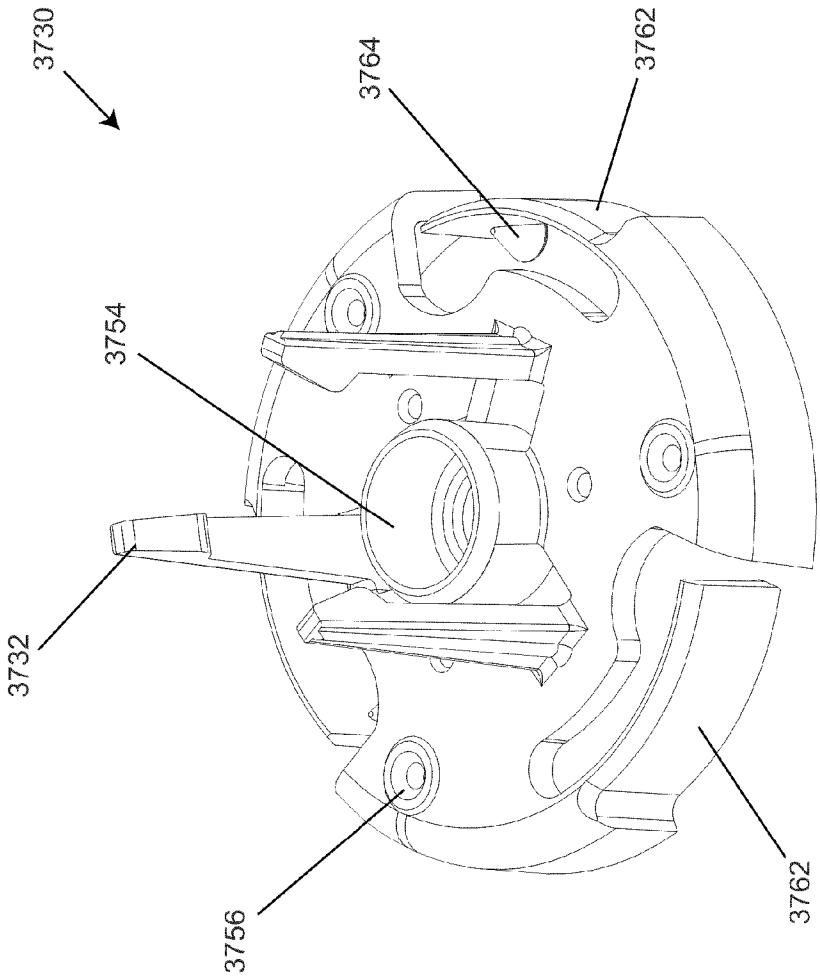

FIG. 122

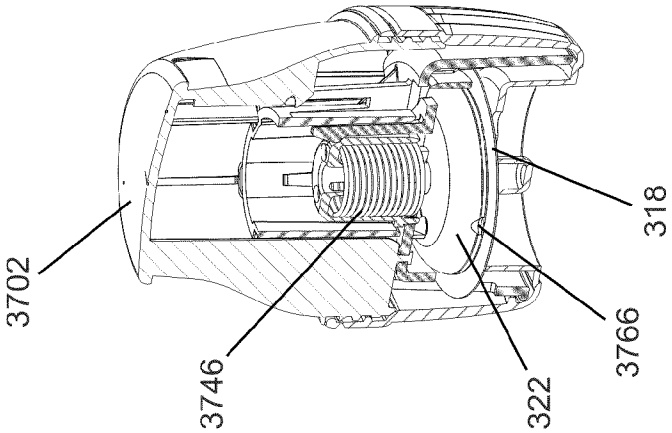

FIG. 125

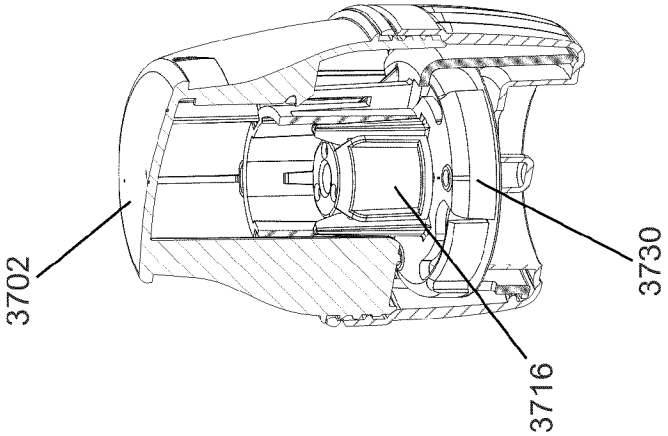

FIG. 124

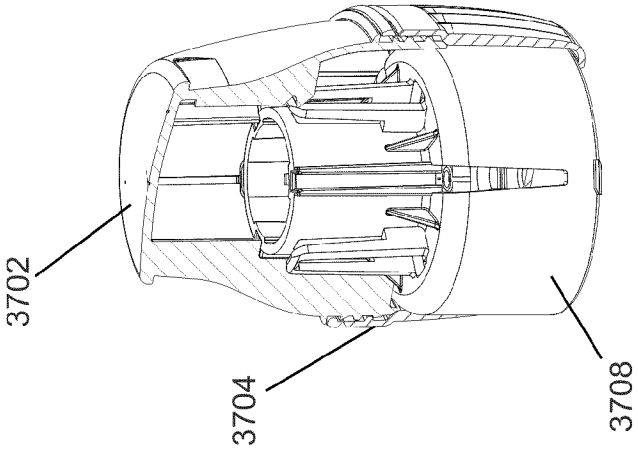

FIG. 123

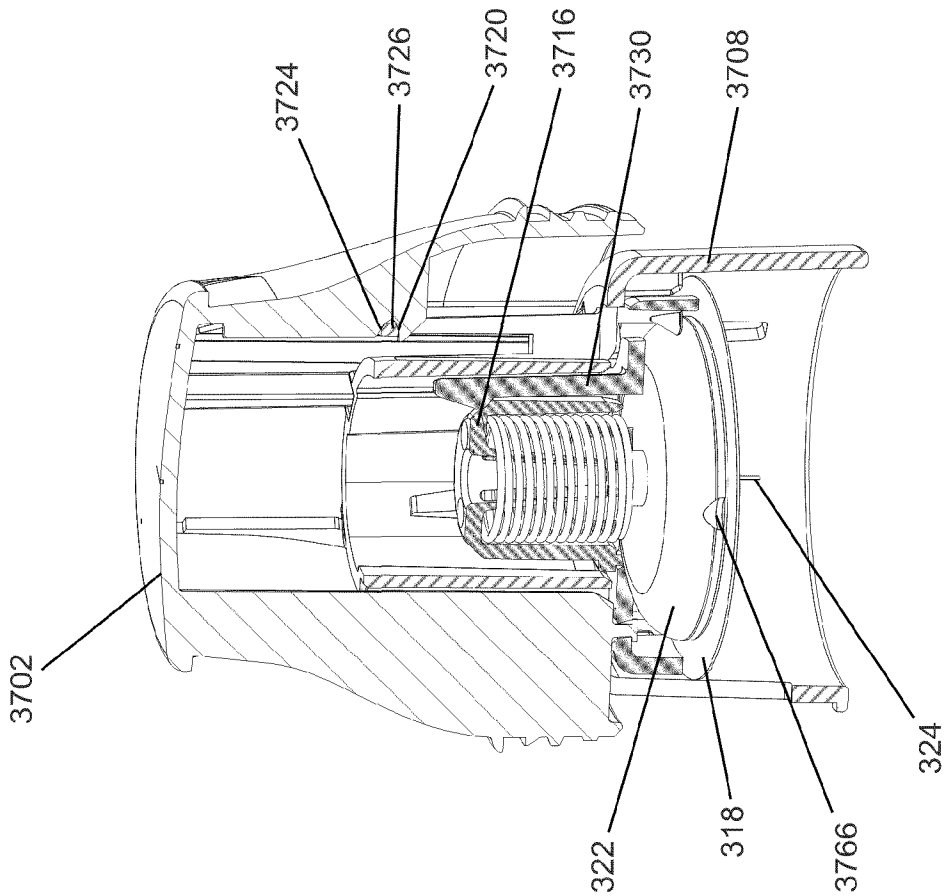

FIG. 126

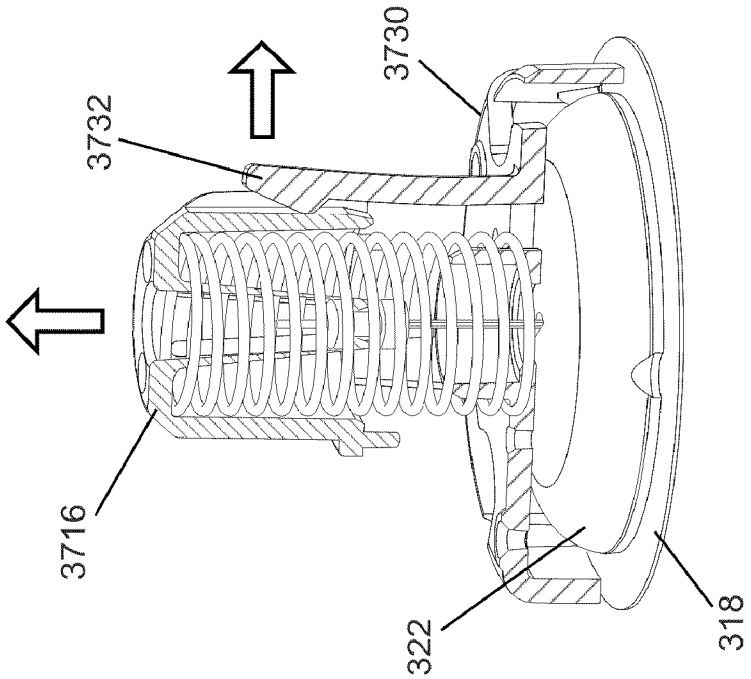

FIG. 128

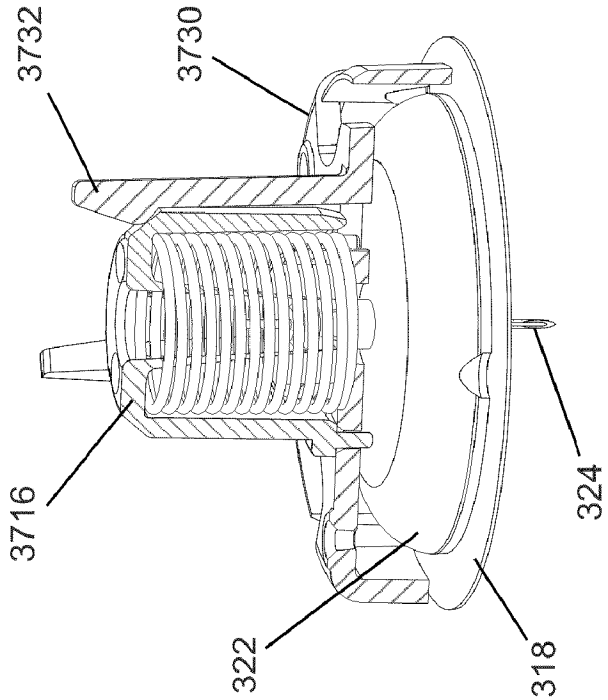

FIG. 127

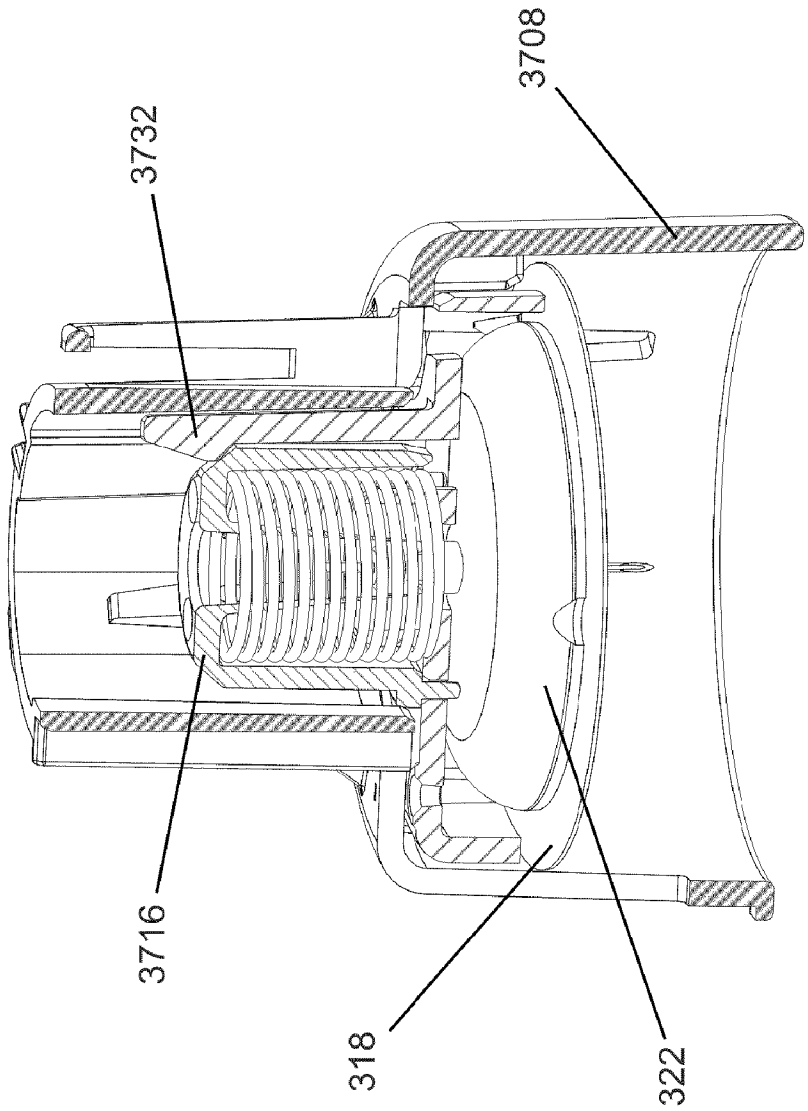

FIG. 129

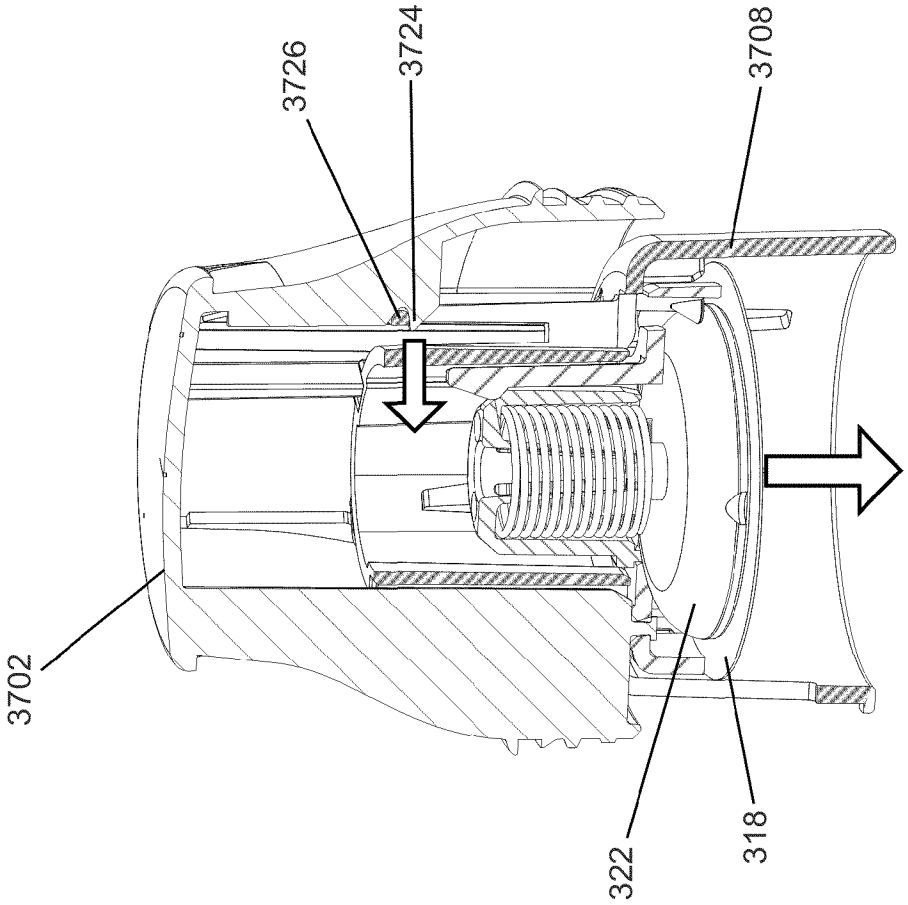

FIG. 130

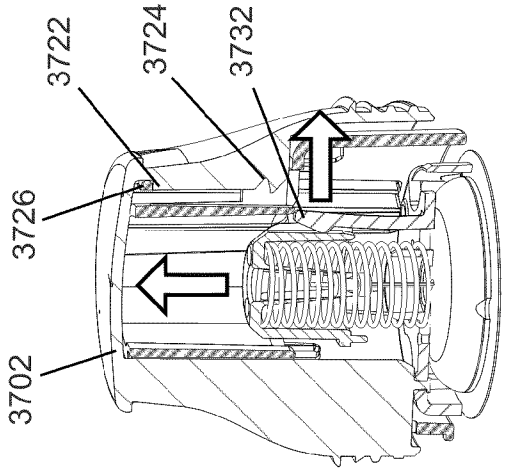

FIG. 133

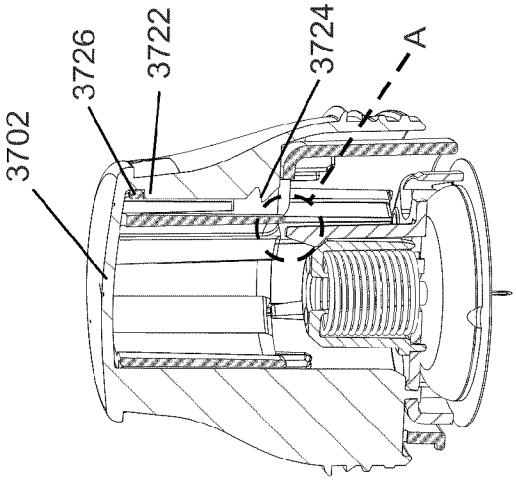

FIG. 132

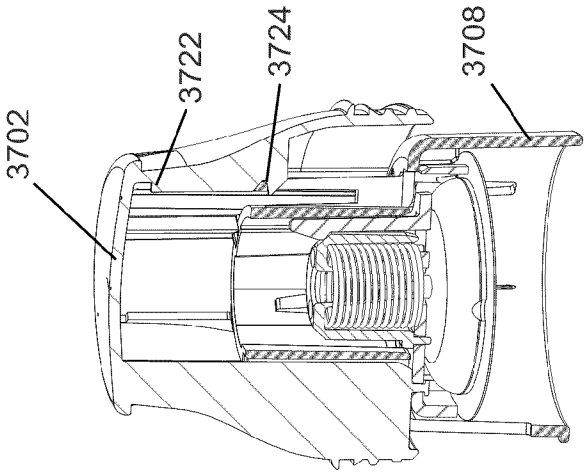

FIG. 131

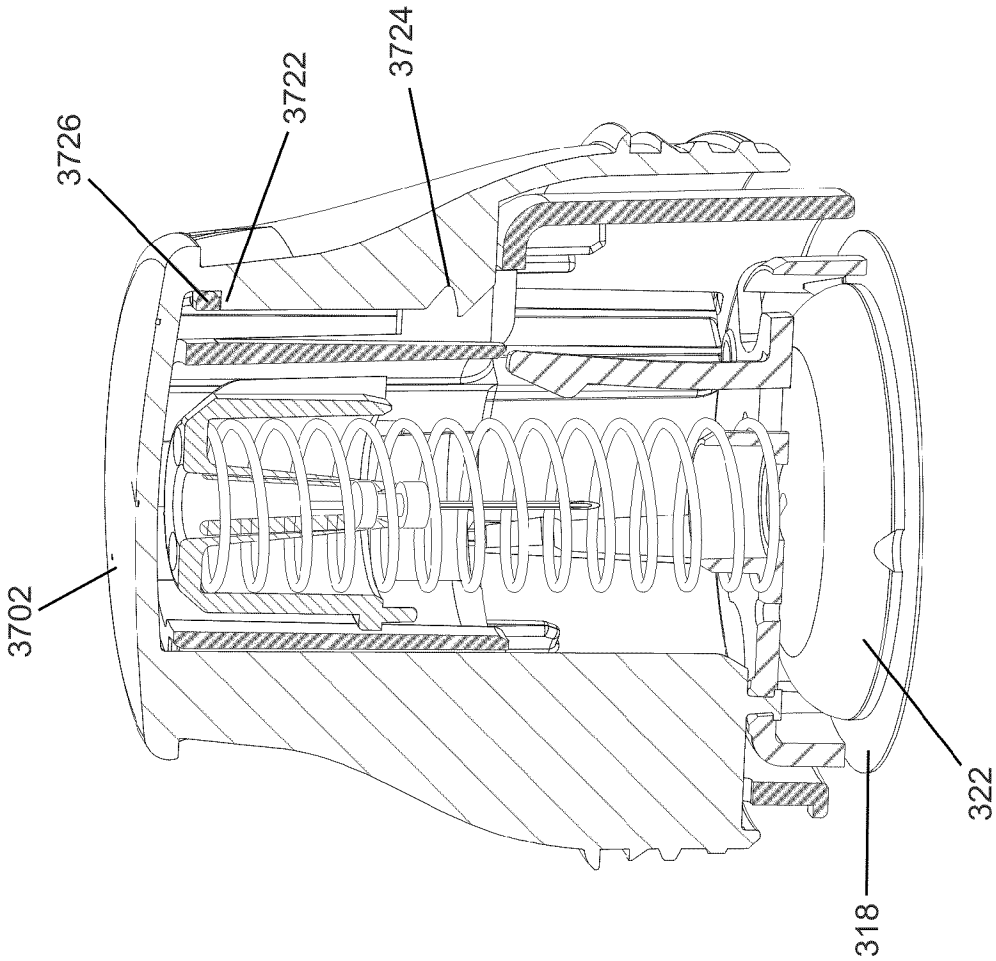

FIG. 134

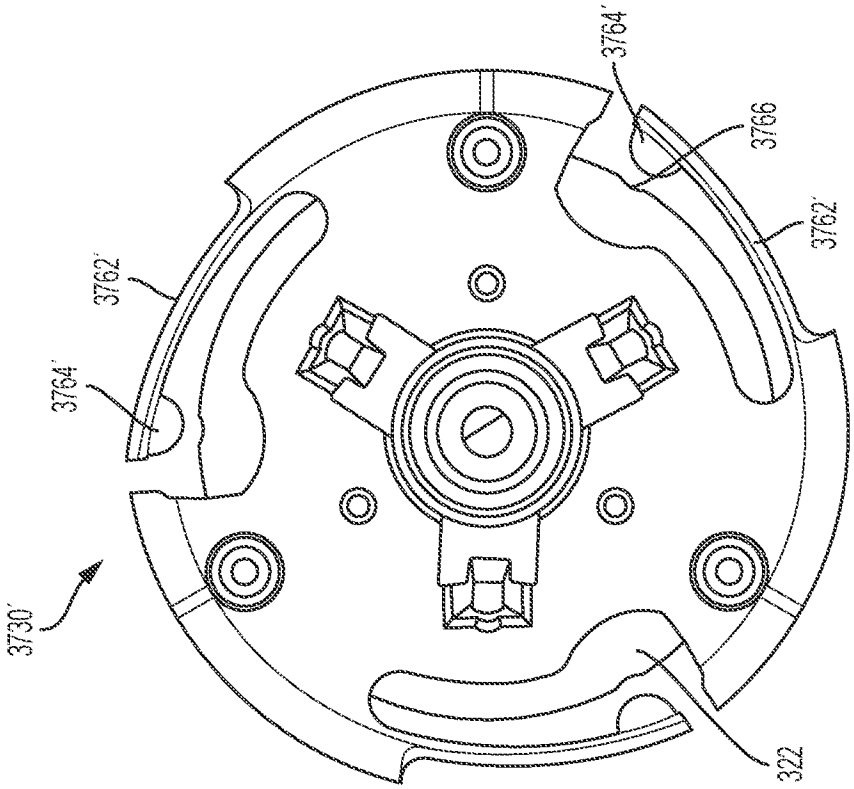

FIG. 136

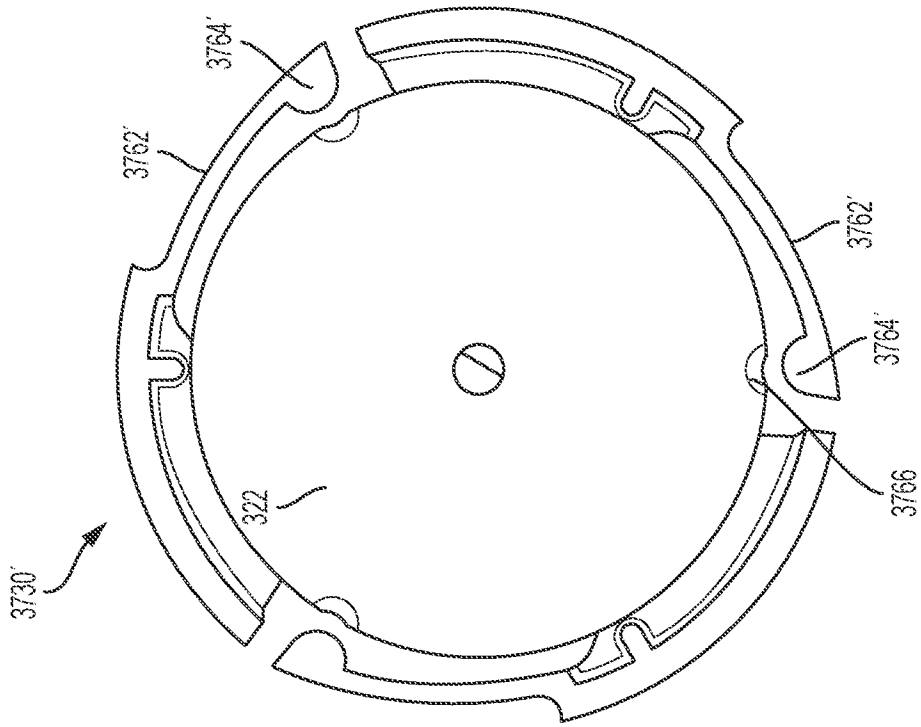

FIG. 135

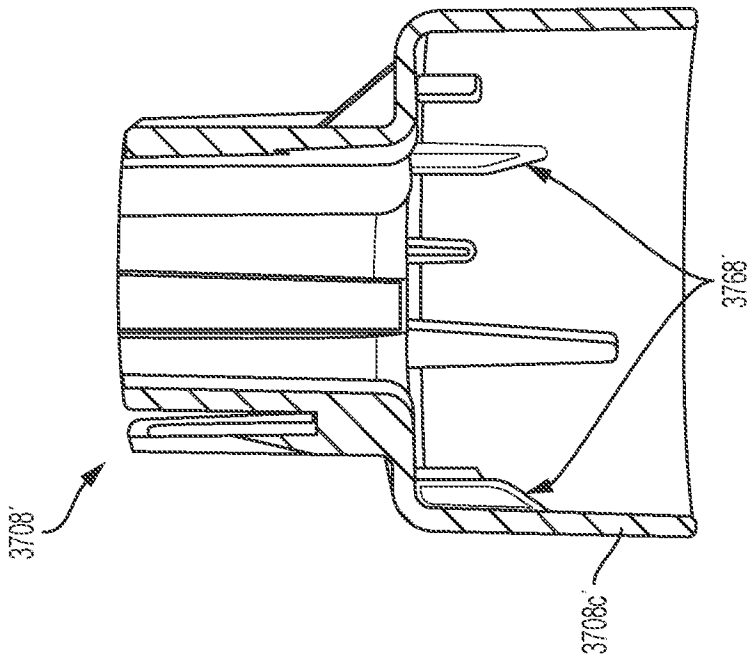

FIG. 138

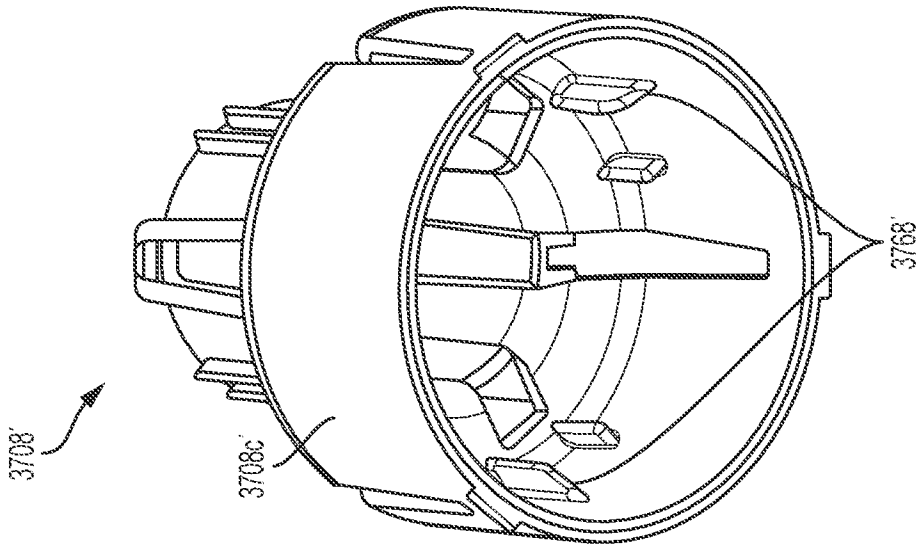

FIG. 137

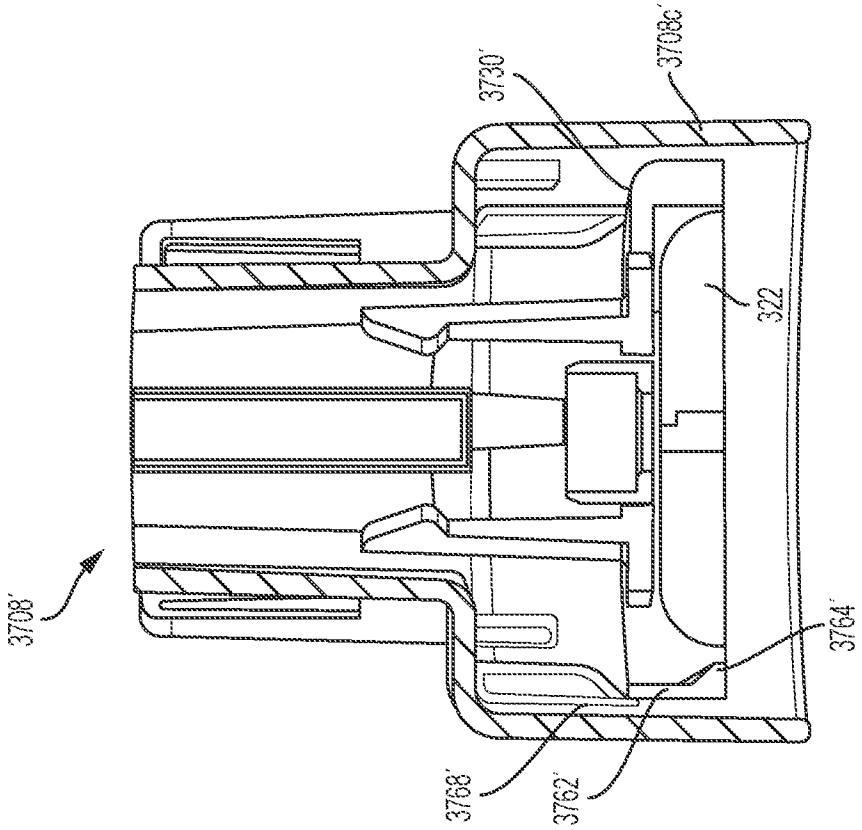

FIG. 140

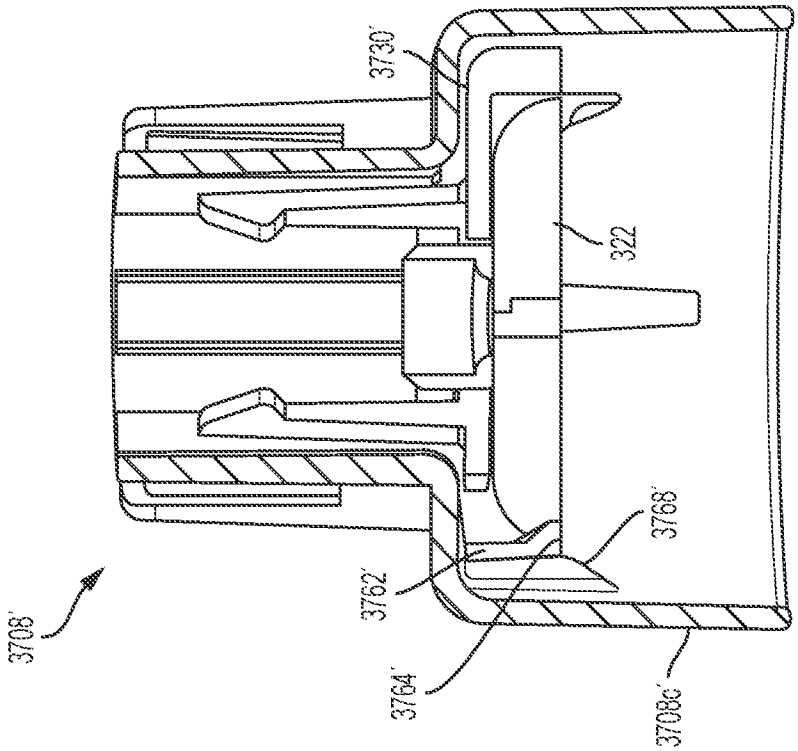

FIG. 139

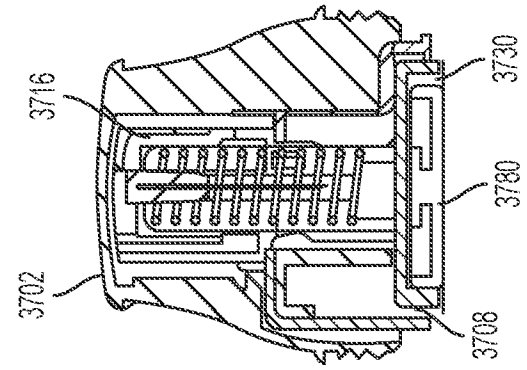

FIG. 144

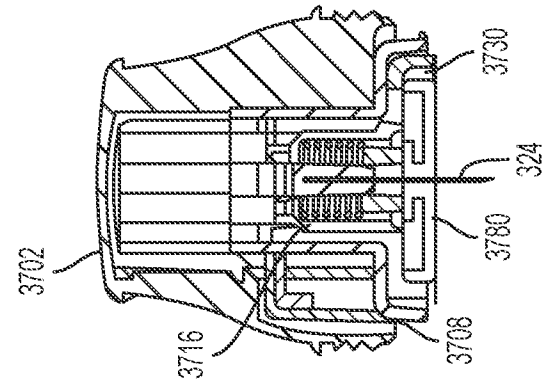

FIG. 143

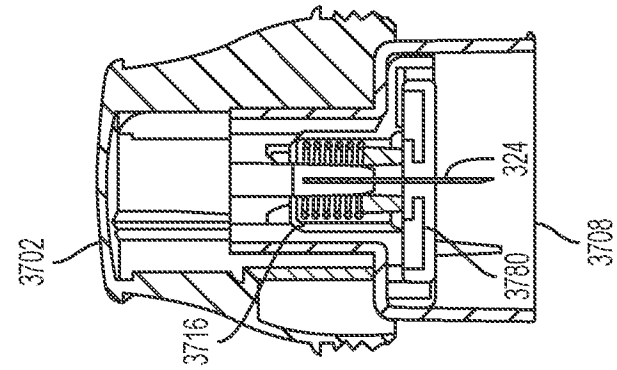

FIG. 142

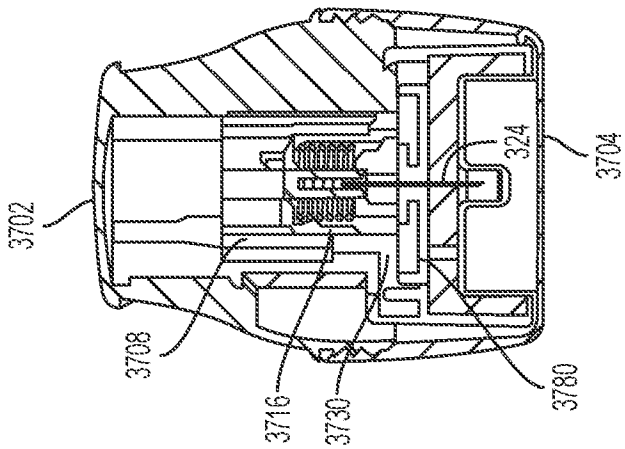

FIG. 141

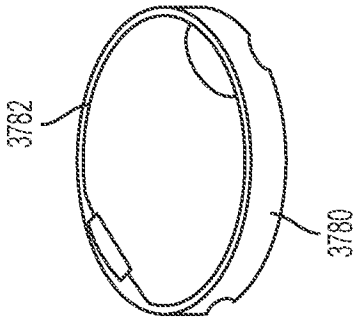

FIG. 147a

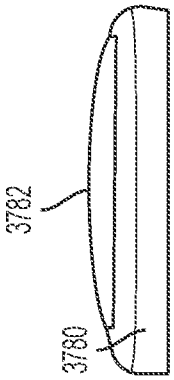

FIG. 147b

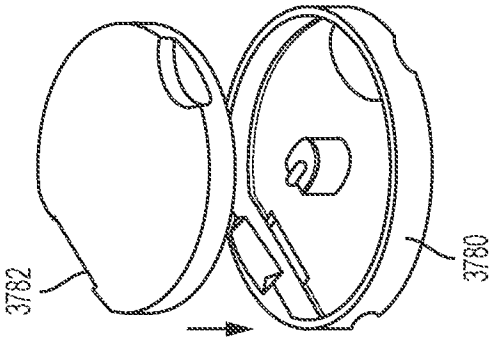

FIG. 146a

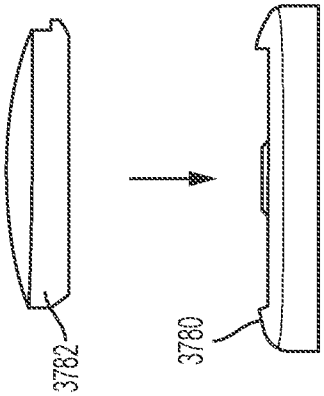

FIG. 146b

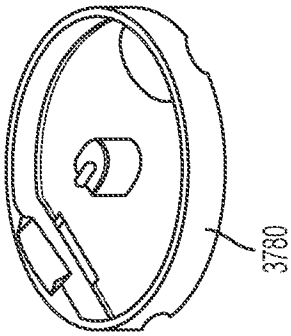

FIG. 145a

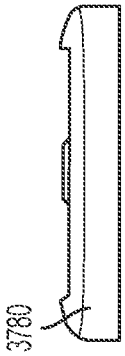

FIG. 145b

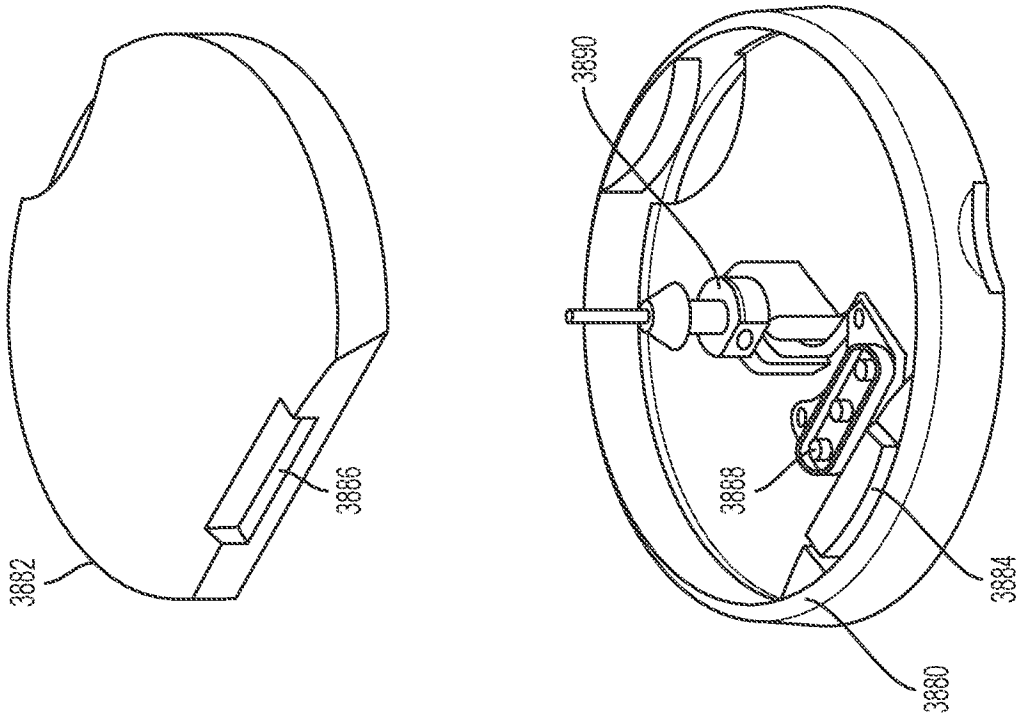

FIG. 148

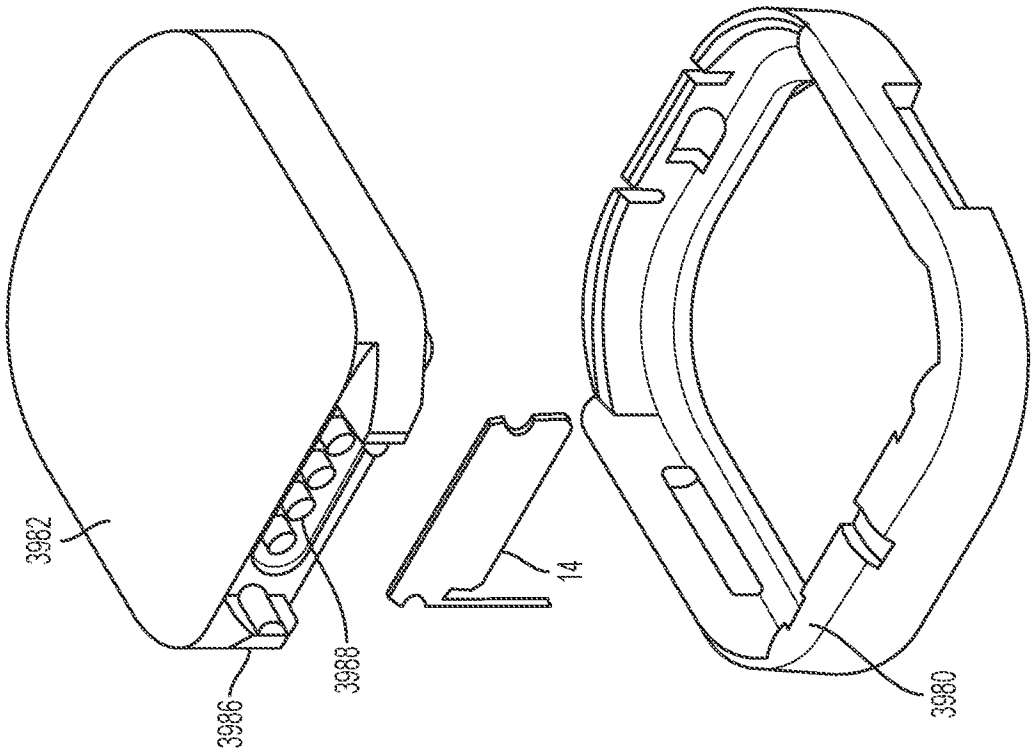

FIG. 149

3900

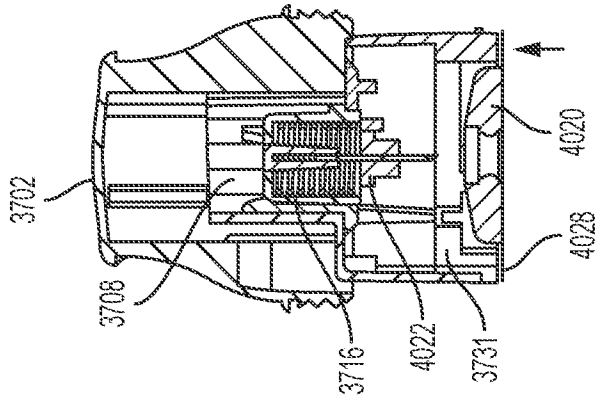

FIG. 153

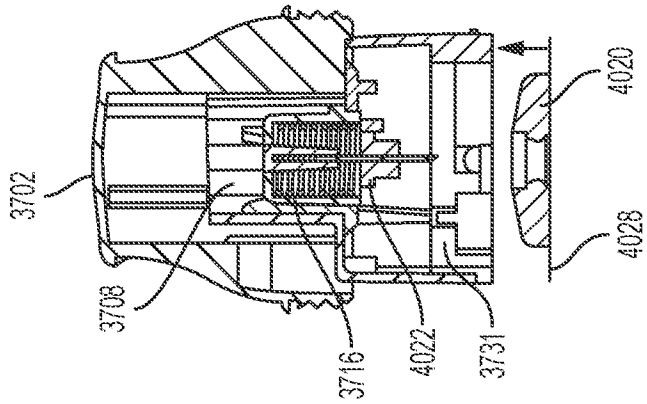

FIG. 152

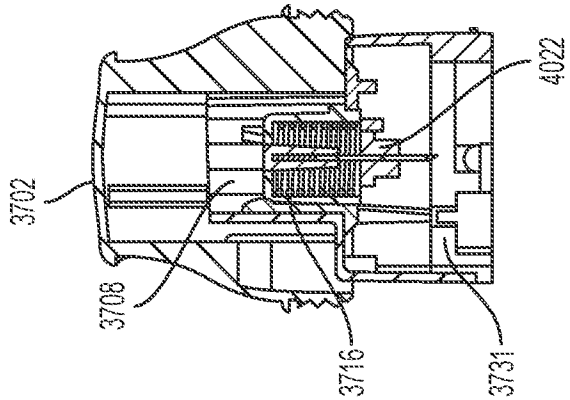

FIG. 151

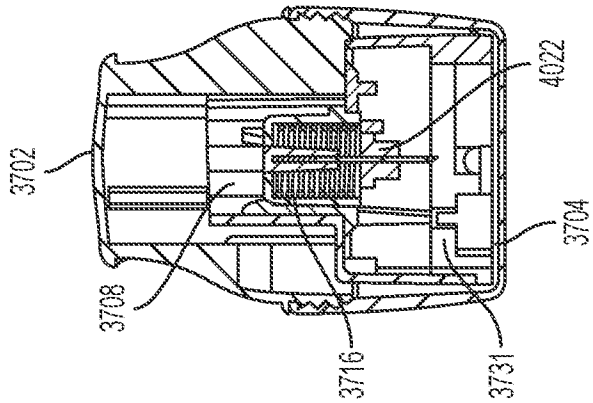

FIG. 150

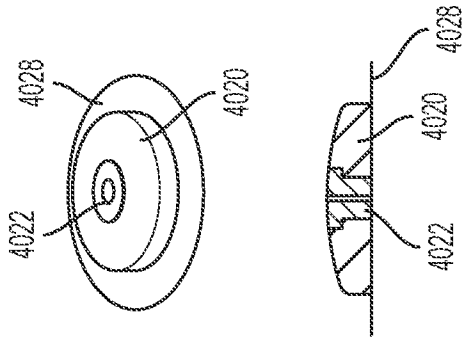

FIG. 156

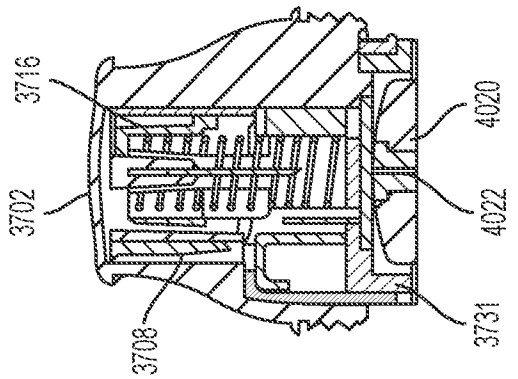

FIG. 155

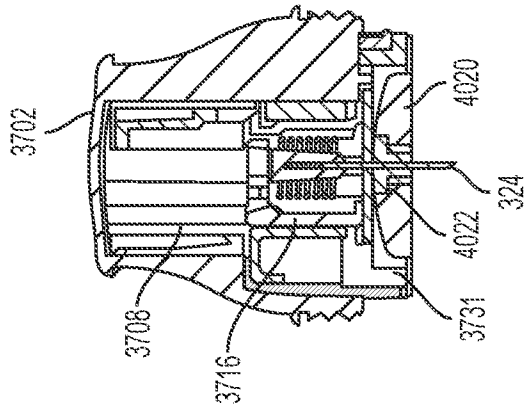

FIG. 154

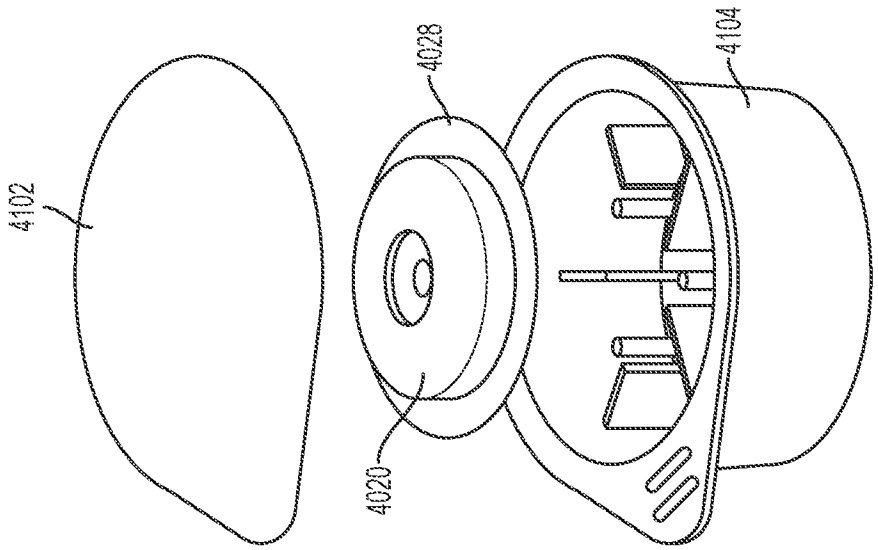

FIG. 158

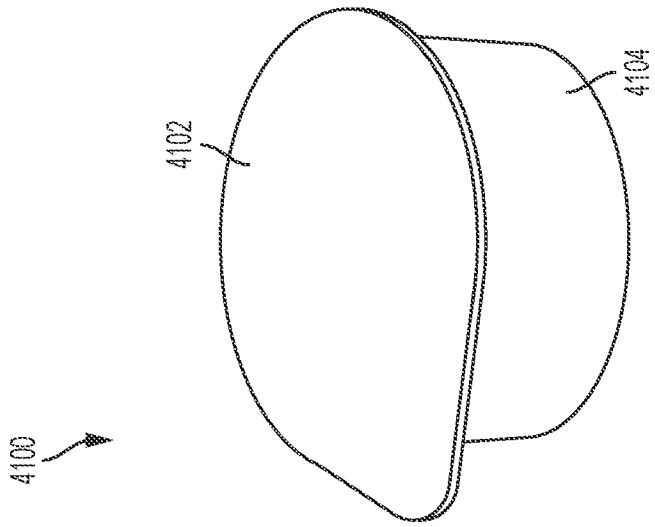

FIG. 157

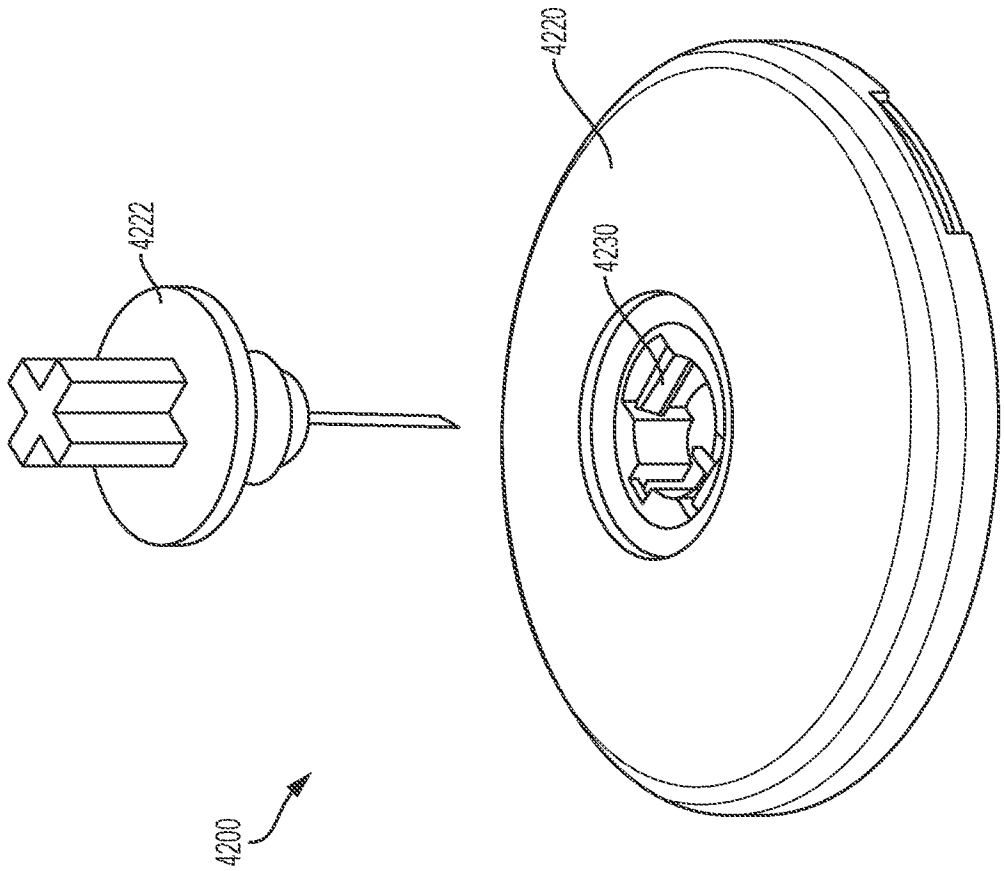

FIG. 159

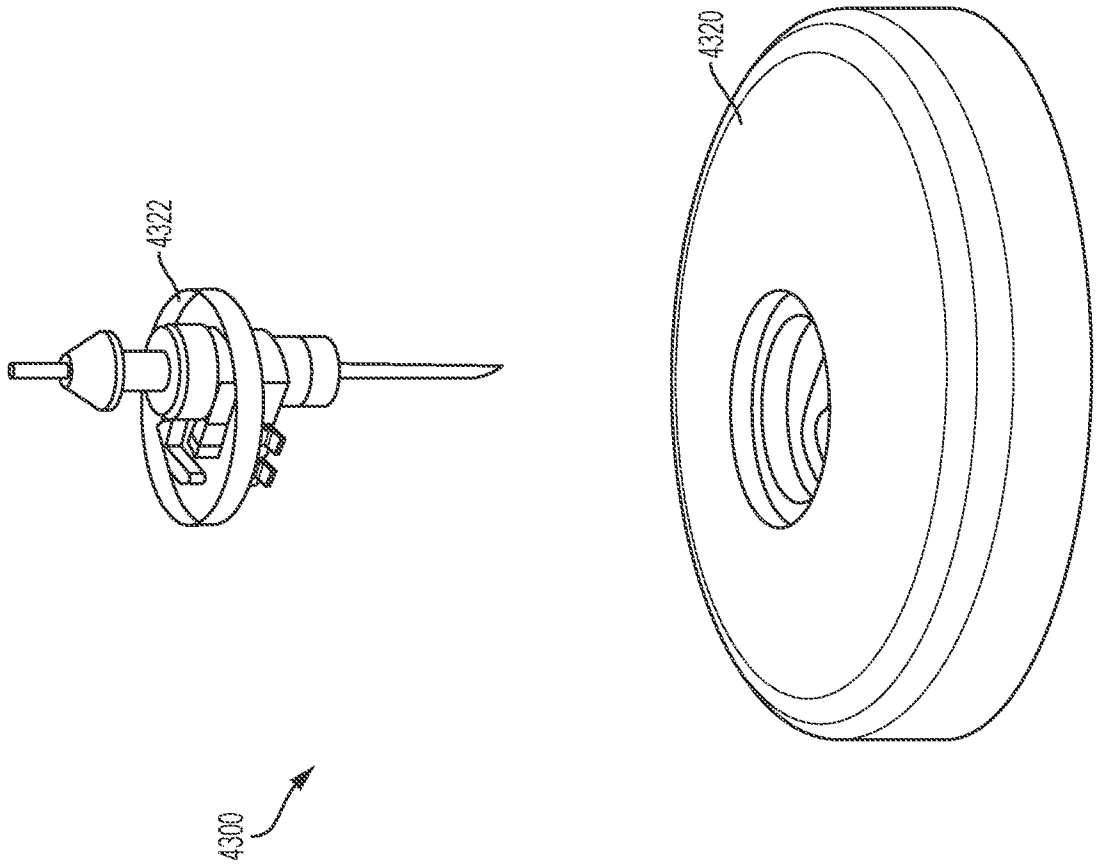

FIG. 160

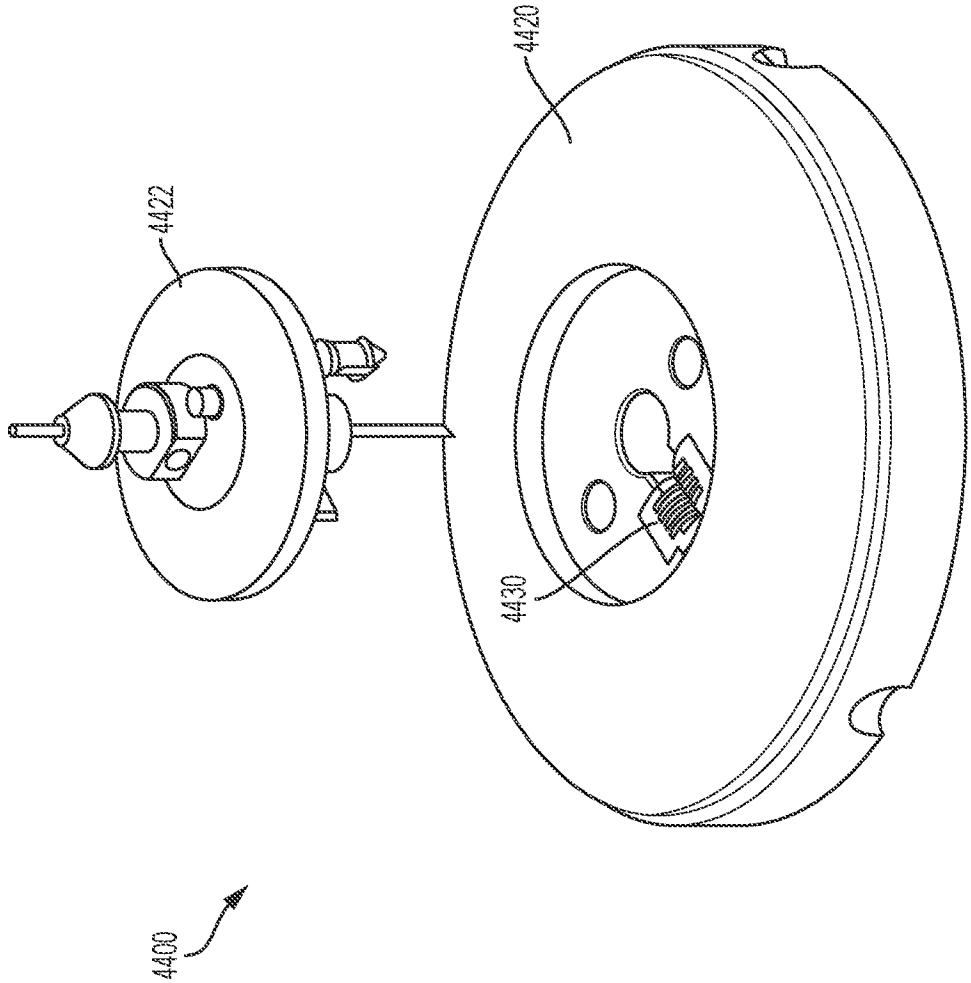

FIG. 161

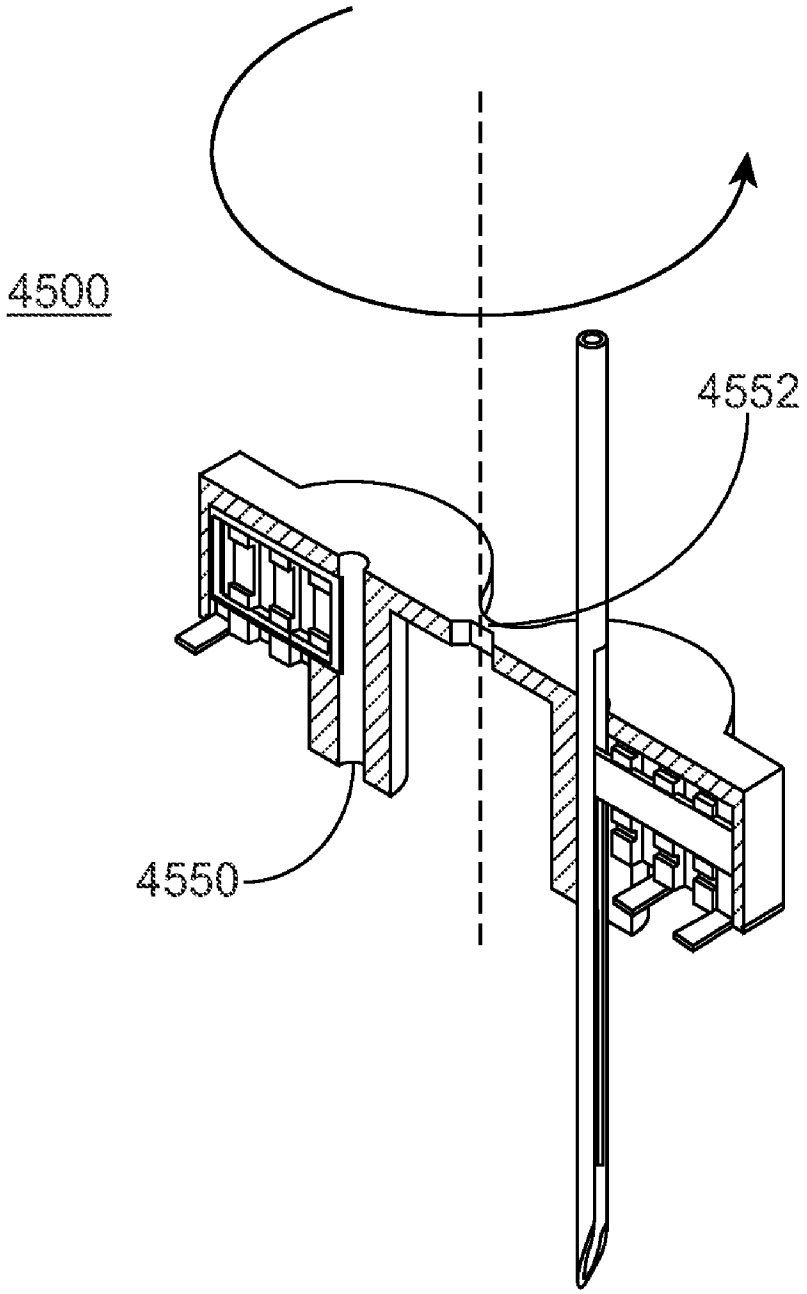

FIG. 162

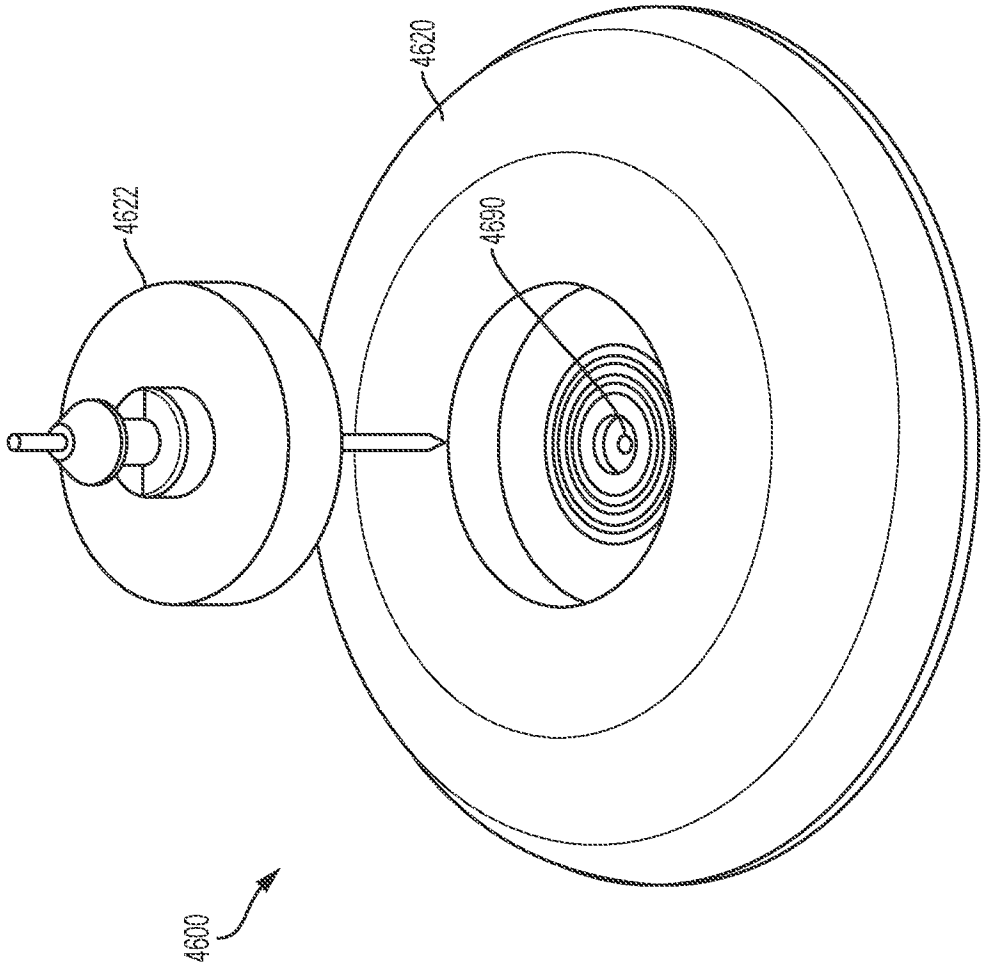

FIG. 163

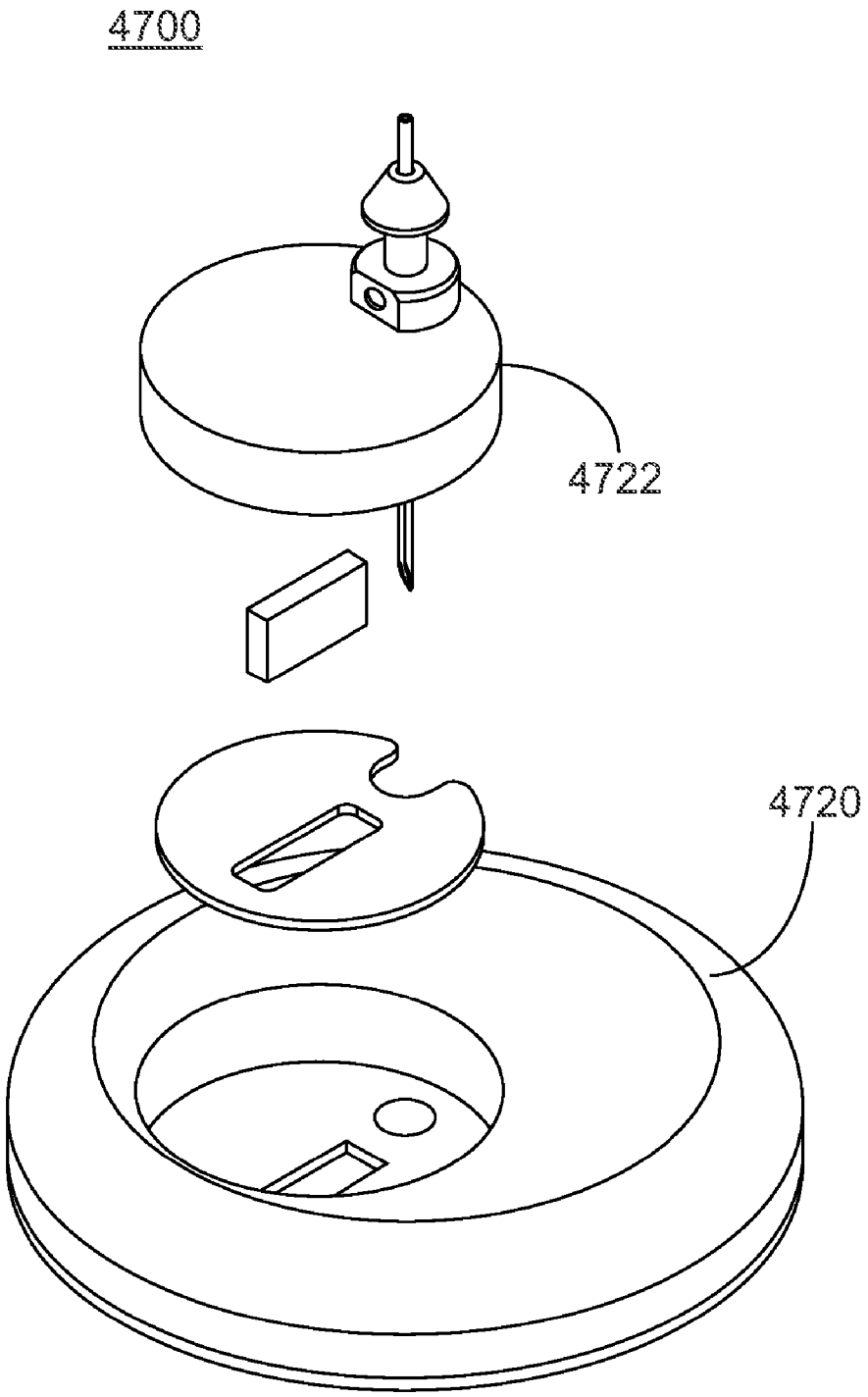

FIG. 164

MEDICAL DEVICE INSERTERS AND PROCESSES OF INSERTING AND USING MEDICAL DEVICES

CROSS-REFERENCE TO RELATED APPLICATIONS

The present application is a continuation of U.S. patent application Ser. No. 16/002,847, filed Jun. 7, 2018, which is a continuation of U.S. patent application Ser. No. 13/436,768, filed Mar. 30, 2012, now U.S. Pat. No. 10,010,280, which is a continuation of U.S. patent application Ser. No. 13/071,461, filed Mar. 24, 2011, now U.S. Pat. No. 9,215,992, which claims the benefit of U.S. Provisional Application Nos. 61/317,243, filed Mar. 24, 2010; 61/345,562, filed May 17, 2010; 61/361,374, filed Jul. 2, 2010; and 61/411,262, filed Nov. 8, 2010, all of which are incorporated herein by reference in their entireties and for all purposes.

INCORPORATION BY REFERENCE

Patents, applications and/or publications described herein, including the following patents, applications and/or publications are incorporated herein by reference for all purposes: U.S. Pat. Nos. 4,545,382; 4,711,245; 5,262,035; 5,262,305; 5,264,104; 5,320,715; 5,356,786; 5,509,410; 5,543,326; 5,593,852; 5,601,435; 5,628,890; 5,820,551; 5,822,715; 5,899,855; 5,918,603; 6,071,391; 6,103,033; 6,120,676; 6,121,009; 6,134,461; 6,143,164; 6,144,837; 6,161,095; 6,175,752; 6,270,455; 6,284,478; 6,299,757; 6,338,790; 6,377,894; 6,461,496; 6,503,381; 6,514,460; 6,514,718; 6,540,891; 6,560,471; 6,579,690; 6,591,125; 6,592,745; 6,600,997; 6,605,200; 6,605,201; 6,616,819; 6,618,934; 6,650,471; 6,654,625; 6,676,816; 6,730,200; 6,736,957; 6,746,582; 6,749,740; 6,764,581; 6,773,671; 6,881,551; 6,893,545; 6,932,892; 6,932,894; 6,942,518; 7,041,468; 7,167,818; and 7,299,082; 7,381,184; 7,740,581; 7,811,231; U.S. Published Application Nos. 2005/0182306, now U.S. Pat. No. 8,771,183; 2006/0091006; 2007/0056858, now U.S. Pat. No. 8,298,389; 2007/0068807, now U.S. Pat. No. 7,846,311; 2007/0095661; 2007/0108048, now U.S. Pat. No. 7,918,975; 2007/0149873, now U.S. Pat. No. 9,014,773; 2007/0149875, now U.S. Pat. No. 8,515,518; 2007/0199818, now U.S. Pat. No. 7,811,430; 2007/0227911, now U.S. Pat. No. 7,887,682; 2007/0233013; 2008/0058625, now U.S. Pat. No. 7,920,907; 2008/0064937; 2008/0066305, now U.S. Pat. No. 7,895,740; 2008/0071157; 2008/0071158; 2008/0081977, now U.S. Pat. No. 7,618,369; 2008/0102441, now U.S. Pat. No. 7,822,557; 2008/0148873, now U.S. Pat. No. 7,802,467; 2008/0161666; 2008/0179187, now U.S. Pat. No. 8,808,515; 2008/0267823; 2008/0319295, now U.S. Pat. No. 8,597,188; 2008/0319296, now U.S. Pat. No. 8,617,069; 2009/0018425, now U.S. Pat. No. 8,160,670; 2009/0247857, now U.S. Pat. No. 8,346,335; 2009/0257911, now U.S. Pat. No. 8,252,229, 2009/0281406; 2009/0294277; 2009/0054748, now U.S. Pat. No. 7,885,698; 2009/0054749; 2010/0030052; 2010/0065441, now U.S. Pat. No. 8,636,884; 2010/0081905, now U.S. Pat. No. 8,983,568; 2010/0081909, now U.S. Pat. No. 8,219,173; 2010/0213057; 2010/0325868, now U.S. Pat. No. 7,866,026; 2010/0326842; 2010/0326843, now U.S. Pat. No. 8,437,827; 2010/0331643; 2011/0046466; U.S. patent application Ser. Nos. 12/624,767, now U.S. Patent Publ. No. 2011/0124993; Ser. No. 12/625,185, now U.S. Pat. No. 8,354,013; Ser. No. 12/625,208, now U.S. Pat. No. 9,042,954; Ser. No. 12/625,524, now U.S. Pat. No. 8,390,455; Ser. No. 12/625,525, now U.S. Pat. No. 8,358,210; Ser. No. 12/625,528, now U.S. Pat. No. 8,115,635; Ser. No. 12/628,177, now U.S. Patent Publ. No. 2010/0076289; Ser. No. 12/628,198, now U.S. Patent Publ. No. 2010/0076291; Ser. No. 12/628,201, now U.S. Patent Publ. No. 2010/0076280; Ser. No. 12/628,203, now U.S. Patent Publ. No. 2010/0076292; Ser. No. 12/628,210, now U.S. Patent Publ. No. 2010/0076293; Ser. No. 12/698,124, now U.S. Patent Publ. No. 2010/0198034; Ser. No. 12/698,129, now U.S. Patent Publ. No. 2010/03243925; Ser. No. 12/699,653, now U.S. Patent Publ. No. 2010/0198142; Ser. No. 12/699,844, now U.S. Pat. No. 8,930,203; Ser. No. 12/714,439, now U.S. Patent Publ. No. 2010/0230285; Ser. Nos. 12/730,193; 12/794,721, now U.S. Pat. No. 8,595,607; Ser. No. 12/807,278, now U.S. Patent Publ. No. 2011/0213225; Ser. No. 12/842,013, now U.S. Patent Publ. No. 2011/0021889; Ser. No. 12/870,818, now U.S. Patent Publ. No. 2011/0073475; Ser. No. 12/871,901, now U.S. Pat. No. 8,514,086; Ser. No. 12/873,301, now U.S. Patent Publ. No. 2011/0054275; Ser. No. 12/873,302, now U.S. Patent Publ. No. 2011/0060196; Ser. No. 13/011,897, now U.S. Patent Publ. No. 2011/0184265; and U.S. Provisional Application Nos. 61/238,646; 61/246,825; 61/247,516; 61/249,535; 61/317,243; 61/325,155; 61/345,562; and 61/359,265.

BACKGROUND

The detection and/or monitoring of glucose levels or other analytes, such as lactate, oxygen, A1C, or the like, in certain individuals is vitally important to their health. For example, the monitoring of glucose is particularly important to individuals with diabetes. Diabetics generally monitor glucose levels to determine if their glucose levels are being maintained within a clinically safe range, and may also use this information to determine if and/or when insulin is needed to reduce glucose levels in their bodies or when additional glucose is needed to raise the level of glucose in their bodies.

Growing clinical data demonstrates a strong correlation between the frequency of glucose monitoring and glycemic control. Despite such correlation, many individuals diagnosed with a diabetic condition do not monitor their glucose levels as frequently as they should due to a combination of factors including convenience, testing discretion, pain associated with glucose testing, and cost.

Devices have been developed for the automatic monitoring of analyte(s), such as glucose, in bodily fluid such as in the blood stream or in interstitial fluid ("ISF"), or other biological fluid. Some of these analyte measuring devices are configured so that at least a portion of the devices are positioned below a skin surface of a user, e.g., in a blood vessel or in the subcutaneous tissue of a user, so that the monitoring is accomplished in vivo.

With the continued development of analyte monitoring devices and systems, there is a need for such analyte monitoring devices, systems, and methods, as well as for processes for manufacturing analyte monitoring devices and systems that are cost effective, convenient, and with reduced pain, provide discreet monitoring to encourage frequent analyte monitoring to improve glycemic control.

SUMMARY

In certain embodiments, an apparatus for inserting a medical device into the skin of a subject is provided, which includes a sheath defining a distal surface for placement on the skin of the subject; a device support movable between a proximal and distal position, and adapted to support the medical device; a sharp support movable between a proxi-

mal and a distal position and adapted to support a sharp for inserting the medical device into the skin of the subject and extending through a portion of said device support, the device support comprising a first engagement member for releasably coupling the sharp support to the device support and a second engagement member for engaging the medical device; a handle movable between a proximal position and a distal position relative to the sheath and adapted to urge the device support and the sharp support from a proximal to a distal position to insert the sharp into the skin of the subject; and a driver for advancing the sharp support towards the proximal position when the sharp support reaches the distal position.

In some embodiments, the handle and sheath define an interlocking configuration which prevents relative movement of the handle with respect to the sheath which is overcome by a force applied to the handle. In some embodiment, the second engagement member includes one or more movable arms for engaging the device. The one or more movable arms are normally biased in a position spaced apart from the medical device in some embodiments. The one or more movable arms may be maintained in engagement with the medical device when the device support is in the proximal position. In some embodiments, the one or more movable arms return to the configuration space apart from the medical device when the device support is in the distal position.

In some embodiments, the engagement member is released from the sharp support when the device support reaches a distal position. In some embodiments, the engagement member is maintained in engagement with the device support by a portion of the sheath.

In some embodiments, a stop is provided to maintain the device support in the proximal position.

In some embodiments, the handle includes a button disposed within an outer housing. The handle may be flush with the top of the outer housing in an initial configuration when the medical device is supported in the device support, and the handle may protrude above the outer housing after the medical device is released from the device support.

In some embodiments, the medical device is an analyte sensor.

A method for using a medical device is provided which includes providing an apparatus comprising a sheath defining a distal surface, a device support adapted to support the medical device, a sharp support adapted to support a sharp extending through a portion of said device support, a handle movable relative to the sheath, and a driver for displacing the sharp support; disposing the distal surface of the sheath on the skin of the subject; and displacing the handle in a first longitudinal direction; displacing the sharp support in the first longitudinal direction, the sharp support displacing the sharp and the medical device. The method further includes inserting the sharp into the skin of the subject; delivering the medical device to the subject; releasing the driver; and displacing the sharp in the second longitudinal direction by the driver.

In some embodiments, the method further includes locking at least a portion of the sheath to the handle.

These and other features, objects, and advantages of the disclosed subject matter will become apparent to those persons skilled in the art upon reading the detailed description as more fully described below.

BRIEF DESCRIPTION OF THE DRAWINGS

A detailed description of various aspects, features, and embodiments of the subject matter described herein is provided with reference to the accompanying drawings, which are briefly described below. The drawings are illustrative and are not necessarily drawn to scale, with some components and features being exaggerated for clarity. The drawings illustrate various aspects and features of the present subject matter and may illustrate one or more embodiment(s) or example(s) of the present subject matter in whole or in part.

FIG. **1** illustrates an analyte monitoring system for real time analyte (e.g., glucose) measurement, data acquisition and/or processing in certain embodiments;

FIG. **2** is a view of an electrochemical sensor in accordance with an embodiment of the disclosed subject matter;

FIG. **3** is a view of the electrochemical sensor of FIG. **2** in a folded configuration in accordance with the disclosed subject matter;

FIG. **4** is a perspective view of an embodiment of an inserter in accordance with one embodiment of the disclosed subject matter;

FIGS. **5-6** are perspective views of the inserter of FIG. **4** in accordance with the disclosed subject matter;

FIGS. **7-8** are sectional, perspective views of the inserter of FIG. **4** in accordance with the disclosed subject matter;

FIGS. **9-10** are schematic views of a needle hub in accordance with one embodiment of the disclosed subject matter;

FIG. **11** is a distal end view of a sharp in accordance with one embodiment of the disclosed subject matter;

FIG. **12** is a side view of a sharp in accordance with one embodiment of the disclosed subject matter;

FIG. **13** is a side view of a sharp in accordance with one embodiment of the disclosed subject matter;

FIG. **14** is a perspective view of a sharp in accordance with one embodiment of the disclosed subject matter;

FIGS. **14**A-B are top views of a sharp in accordance with one embodiment of the disclosed subject matter;

FIG. **14**C is a side view of a sharp in accordance with one embodiment of the disclosed subject matter;

FIG. **15** is a schematic view of an alternate embodiment for forming a sharp to be used in an inserter in accordance with one embodiment of the disclosed subject matter;

FIG. **16** is a perspective view of an inserter in accordance with one embodiment of the disclosed subject matter;

FIG. **17** is a perspective view with parts separated of an inserter in accordance with one embodiment of the disclosed subject matter;

FIG. **17**A is an enlarged perspective view of a portion of an inserter in accordance with one embodiment of the disclosed subject matter.

FIG. **18** is an enlarged sectional view with parts separated of an inserter in accordance with one embodiment of the disclosed subject matter;

FIGS. **19-21** depict an alternative method for retaining a sharp and sensor within the on body housing;

FIG. **22** is a sectional, perspective views of the inserter of FIG. **4** in accordance with the disclosed subject matter;

FIGS. **23-24** are perspective views of the inserter of FIG. **4** in accordance with the disclosed subject matter;

FIGS. **25-26** are perspective views of another embodiment of an inserter in accordance with the disclosed subject matter;

FIGS. **27-32** are perspective views of components of the inserter of FIG. **25** in accordance with the disclosed subject matter;

FIG. **33** is a sectional view of the inserter of FIG. **25** in accordance with the disclosed subject matter;

FIG. **34** is a sectional, perspective view of the inserter of FIG. **25** in accordance with the disclosed subject matter;

FIG. **35** is a perspective view of the inserter of FIG. **25** in accordance with the disclosed subject matter;

FIGS. **36-37** are sectional, perspective views of the inserter of FIG. **25** in accordance with the disclosed subject matter;

FIGS. **38-39** are perspective views of the inserter of FIG. **25** in accordance with the disclosed subject matter;

FIGS. **40-41** are perspective views of another embodiment of an inserter in accordance with the disclosed subject matter;

FIGS. **42-46** are perspective views of components of the inserter of FIG. **40** in accordance with the disclosed subject matter;

FIG. **47** is a sectional views of the inserter of FIG. **40** in accordance with the disclosed subject matter;

FIGS. **48-50** are sectional, perspective views of the inserter of FIG. **40** in accordance with the disclosed subject matter;

FIG. **51** is a cross-sectional view of another inserter in accordance with the disclosed subject matter;

FIG. **52** is an exploded perspective view of the inserter of FIG. **51** in accordance with the disclosed subject matter;

FIGS. **53** and **54** are side views of the inserter of FIG. **51** showing the assembly of various components in accordance with the disclosed subject matter;

FIGS. **55-60** are perspective views of the inserter of FIG. **51** showing the assembly of various components in accordance with the disclosed subject matter;

FIGS. **61-65** are cross-sectional views of the inserter of FIG. **51** in accordance with the disclosed subject matter;

FIGS. **66-68** illustrate a process for utilizing a sterilized versions of the inserter of FIG. **51** in accordance with the disclosed subject matter;

FIG. **69-72** illustrates an alternate process for utilizing a sterilized versions of the inserter of FIG. **51** in accordance with the disclosed subject matter;

FIG. **73** is a perspective view of another inserter in accordance with the disclosed subject matter;

FIG. **74** is a perspective view of a component of the inserter of FIG. **73** in accordance with the disclosed subject matter;

FIG. **75** is a cross-sectional view of a component of the inserter of FIG. **73** in accordance with the disclosed subject matter;

FIGS. **76-80** are perspective views of components of the inserter of FIG. **73** in accordance with the disclosed subject matter;

FIGS. **81-87** are cross-sectional views of the inserter of FIG. **73** in accordance with the disclosed subject matter;

FIGS. **88-90** illustrate a process for utilizing a sterilized version of the inserter of FIG. **73** in accordance with the disclosed subject matter;

FIG. **91** is a perspective view of another inserter in accordance with the disclosed subject matter;

FIGS. **92-99** are additional views of the components of the inserter of FIG. **91** in accordance with the disclosed subject matter;

FIGS. **100-106** are cross-sectional views of the inserter of FIG. **91** in accordance with the disclosed subject matter;

FIGS. **107-108** are views of an alternate embodiment of the inserter of FIG. **91** in accordance with the disclosed subject matter; and

FIGS. **109-134** are views of an alternate embodiment of the inserter of FIG. **73** in accordance with the disclosed subject matter.

FIGS. **135-136** illustrate bottom and top views, respectively, of the medical device carrier in accordance with the disclosed subject matter.

FIGS. **137-138** illustrate the sheath component of an inserter in accordance with the disclosed subject matter.

FIGS. **139-140** illustrate, in cross section, the progressive advancement of the on body housing in accordance with the disclosed subject matter.

FIGS. **141-144** illustrate the advancement of the on body housing within an inserter in accordance with the disclosed subject matter.

FIGS. **145***a*-**147***b* illustrate the attachment of a two piece on body housing in accordance with the disclosed subject matter.

FIG. **148** illustrates a two-piece on body housing in accordance with the disclosed subject matter.

FIG. **149** illustrates another two-piece on body housing in accordance with the disclosed subject matter.

FIGS. **150-156** illustrate the advancement of a two piece on body housing in accordance with the disclosed subject matter.

FIGS. **157-158** illustrate the assembly of the two piece on body housing in accordance with the disclosed subject matter.

FIGS. **159-164** illustrate two piece on body housings in accordance with the disclosed subject matter.

DETAILED DESCRIPTION OF THE EMBODIMENTS

A detailed description of the disclosure is provided herein. It should be understood, in connection with the following description, that the subject matter is not limited to particular embodiments described, as the particular embodiments of the subject matter may, of course, vary. It is also to be understood that the terminology used herein is for the purpose of describing particular embodiments only, and is not intended to be limiting, since the scope of the disclosed subject matter will be limited only by the appended claims.

Where a range of values is provided, it is understood that each intervening value between the upper and lower limit of that range, and any other stated or intervening value in that stated range, is encompassed within the disclosed subject matter. Every range stated is also intended to specifically disclose each and every "subrange" of the stated range. That is, each and every range smaller than the outside range specified by the outside upper and outside lower limits given for a range, whose upper and lower limits are within the range from said outside lower limit to said outside upper limit (unless the context clearly dictates otherwise), is also to be understood as encompassed within the disclosed subject matter, subject to any specifically excluded range or limit within the stated range. Where a range is stated by specifying one or both of an upper and lower limit, ranges excluding either or both of those stated limits, or including one or both of them, are also encompassed within the disclosed subject matter, regardless of whether or not words such as "from," "to," "through," or "including" are or are not used in describing the range.

Unless defined otherwise, all technical and scientific terms used herein have the same meaning as commonly understood by one of ordinary skill in the art to which this disclosed subject matter belongs. Although any methods and materials similar or equivalent to those described herein can also be used in the practice or testing of the present disclosed subject matter, this disclosure may specifically mention certain exemplary methods and materials.

All publications mentioned in this disclosure are, unless otherwise specified, incorporated by reference herein for all purposes, including without limitation to disclose and describe the methods and/or materials in connection with which the publications are cited.

The publications discussed herein are provided solely for their disclosure prior to the filing date of the present application. Nothing herein is to be construed as an admission that the present disclosed subject matter is not entitled to antedate such publication by virtue of prior invention. Further, the dates of publication provided may be different from the actual publication dates, which may need to be independently confirmed.

As used herein and in the appended claims, the singular forms "a," "an," and "the" include plural referents unless the context clearly dictates otherwise.

Nothing contained in the Abstract or the Summary should be understood as limiting the scope of the disclosure. The Abstract and the Summary are provided for bibliographic and convenience purposes and due to their formats and purposes should not be considered comprehensive.

As will be apparent to those of skill in the art upon reading this disclosure, each of the individual embodiments described and illustrated herein has discrete components and features which may be readily separated from or combined with the features of any of the other several embodiments without departing from the scope or spirit of the present disclosed subject matter. Any recited method can be carried out in the order of events recited, or in any other order which is logically possible.

Reference to a singular item includes the possibility that there are plural of the same item present. When two or more items (for example, elements or processes) are referenced by an alternative "or," this indicates that either could be present separately or any combination of them could be present together except where the presence of one necessarily excludes the other or others.

Generally, embodiments of the present disclosure relate to an apparatus for inserting a medical device at least partially into the skin of the patient. Some embodiments relate to in vivo methods and devices for detecting at least one analyte such as glucose in body fluid. Accordingly, embodiments include in vivo analyte sensors configured so that at least a portion of the sensor is positioned in the body of a user (e.g., within the ISF), to obtain information about at least one analyte of the body, e.g., transcutaneously positioned in user's body. In certain embodiments, an in vivo analyte sensor is coupled to an electronics unit that is maintained on the body of the user to process information obtained from the sensor.

In certain embodiments, analyte information is communicated from a first device such as an on body electronics unit to a second device which may include user interface features, including a display, and/or the like. Information may be communicated from the first device to the second device automatically and/or continuously when the analyte information is available, or may not be communicated automatically and/or continuously, but rather stored or logged in a memory of the first device. Accordingly, in many embodiments of the system, analyte information derived by the sensor/on body electronics (for example, on body electronics) is made available in a user-usable or viewable form only when queried by the user such that the timing of data communication is selected by the user. In some embodiments, the display of information is selected by the user, while the timing of data communication is not.

In this manner, analyte information is only provided or evident to a user (provided at a user interface device) in some embodiments when desired by the user even though an in vivo analyte sensor automatically and/or continuously monitors the analyte level in vivo, i.e., the sensor automatically monitors analyte such as glucose on a pre-defined time interval over its usage life. For example, an analyte sensor may be positioned in vivo and coupled to on body electronics for a given sensing period, e.g., about 14 days. In certain embodiments, the sensor-derived analyte information is automatically communicated from the sensor electronics assembly to a remote monitor device or display device for output to a user throughout the 14 day period according to a schedule programmed at the on body electronics (e.g., about every 1 minute or about every 5 minutes or about every 10 minutes, or the like). In certain embodiments, sensor-derived analyte information is only communicated from the sensor electronics assembly to a remote monitor device or display device at user-determined times, e.g., whenever a user decides to check analyte information. At such times, a communications system is activated, and sensor-derived information is then sent from the on body electronics to the remote device or display device.

In still other embodiments, the information may be communicated from the first device to the second device automatically and/or continuously when the analyte information is available, and the second device stores or logs the received information without presenting or outputting the information to the user. In such embodiments, the information is received by the second device from the first device when the information becomes available (e.g., when the sensor detects the analyte level according to a time schedule). However, the received information is initially stored in the second device and only output to a user interface or an output component of the second device (e.g., display) upon detection of a request for the information on the second device.

Accordingly, in certain embodiments an inserter as described herein is used to place a sensor electronics assembly on the body so that at least a portion of the in vivo sensor is in contact with bodily fluid such as ISF. Once the sensor is electrically coupled to the electronics unit, sensor derived analyte information may be communicated from the on body electronics to a display device on-demand by powering on the display device (or it may be continually powered), and executing a software algorithm stored in and accessed from a memory of the display device, to generate one or more request commands, control signal or data packet to send to the on body electronics. The software algorithm executed under, for example, the control of the microprocessor or application specific integrated circuit (ASIC) of the display device may include routines to detect the position of the on body electronics relative to the display device to initiate the transmission of the generated request command, control signal and/or data packet.

Display devices may also include programming stored in memory for execution by one or more microprocessors and/or ASICs to generate and transmit the one or more request command, control signal or data packet to send to the on body electronics in response to a user activation of an input mechanism on the display device such as depressing a button on the display device, triggering a soft button associated with the data communication function, and so on. The input mechanism may be alternatively or additionally provided on or in the on body electronics which may be configured for user activation. In certain embodiments, voice commands or audible signals may be used to prompt

or instruct the microprocessor or ASIC to execute the software routine(s) stored in the memory to generate and transmit the one or more request command, control signal or data packet to the on body device. In the embodiments that are voice activated or responsive to voice commands or audible signals, on body electronics and/or display device includes a microphone, a speaker, and processing routines stored in the respective memories of the on body electronics and/or the display device to process the voice commands and/or audible signals. In certain embodiments, positioning the on body electronics and the display device within a predetermined distance (e.g., close proximity) relative to each other initiates one or more software routines stored in the memory of the display device to generate and transmit a request command, control signal or data packet.

Different types and/or forms and/or amounts of information may be sent for each on demand reading, including but not limited to one or more of current analyte level information (i.e., real time or the most recently obtained analyte level information temporally corresponding to the time the reading is initiated), rate of change of an analyte over a predetermined time period, rate of the rate of change of an analyte (acceleration in the rate of change), historical analyte information corresponding to analyte information obtained prior to a given reading and stored in memory of the assembly. Some or all of real time, historical, rate of change, rate of rate of change (such as acceleration or deceleration) information may be sent to a display device for a given reading. In certain embodiments, the type and/or form and/or amount of information sent to a display device may be preprogrammed and/or unchangeable (e.g., preset at manufacturing), or may not be preprogrammed and/or unchangeable so that it may be selectable and/or changeable in the field one or more times (e.g., by activating a switch of the system, etc.). Accordingly, in certain embodiments, for each on demand reading, a display device will output a current (real time) sensor-derived analyte value (e.g., in numerical format), a current rate of analyte change (e.g., in the form of an analyte rate indicator such as an arrow pointing in a direction to indicate the current rate), and analyte trend history data based on sensor readings acquired by and stored in memory of on body electronics (e.g., in the form of a graphical trace). Additionally, the on skin or sensor temperature reading or measurement associated with each on demand reading may be communicated from the on body electronics to the display device. The temperature reading or measurement, however, may not be output or displayed on the display device, but rather, used in conjunction with a software routine executed by the display device to correct or compensate the analyte measurement output to the user on the display device.

As described, embodiments include inserters for in vivo analyte sensors and on body electronics that together provide body wearable sensor electronics assemblies. In certain embodiments, in vivo analyte sensors are fully integrated with on body electronics (fixedly connected during manufacture), while in other embodiments they are separate but connectable post manufacture (e.g., before, during or after sensor insertion into a body). On body electronics may include an in vivo glucose sensor, electronics, battery, and antenna encased (except for the sensor portion that is for in vivo positioning) in a waterproof housing that includes or is attachable to an adhesive pad. In certain embodiments, the housing withstands immersion in about one meter of water for up to at least 30 minutes. In certain embodiments, the housing withstands continuous underwater contact, e.g., for longer than about 30 minutes, and continues to function properly according to its intended use, e.g., without water damage to the housing electronics where the housing is suitable for water submersion.

Embodiments include sensor insertion devices, which also may be referred to herein as sensor delivery units, or the like. Insertion devices may retain on body electronics assemblies completely in an interior compartment, i.e., an insertion device may be "pre-loaded" with on body electronics assemblies during the manufacturing process (e.g., on body electronics may be packaged in a sterile interior compartment of an insertion device). In such embodiments, insertion devices may form sensor assembly packages (including sterile packages) for pre-use or new on body electronics assemblies, and insertion devices configured to apply on body electronics assemblies to recipient bodies.

Embodiments include portable handheld display devices, as separate devices and spaced apart from an on body electronics assembly, that collect information from the assemblies and provide sensor derived analyte readings to users. Such devices may also be referred to as meters, readers, monitors, receivers, human interface devices, companions, or the like. Certain embodiments may include an integrated in vitro analyte meter. In certain embodiments, display devices include one or more wired or wireless communications ports such as USB, serial, parallel, or the like, configured to establish communication between a display device and another unit (e.g., on body electronics, power unit to recharge a battery, a PC, etc.). For example, a display device communication port may enable charging a display device battery with a respective charging cable and/or data exchange between a display device and its compatible informatics software.

Compatible informatics software in certain embodiments include, for example, but not limited to stand alone or network connection enabled data management software program, resident or running on a display device, personal computer, a server terminal, for example, to perform data analysis, charting, data storage, data archiving and data communication as well as data synchronization. Informatics software in certain embodiments may also include software for executing field upgradable functions to upgrade firmware of a display device and/or on body electronics unit to upgrade the resident software on the display device and/or the on body electronics unit, e.g., with versions of firmware that include additional features and/or include software bugs or errors fixed, etc. Embodiments may include a haptic feedback feature such as a vibration motor or the like, configured so that corresponding notifications (e.g., a successful on-demand reading received at a display device), may be delivered in the form of haptic feedback.

Embodiments include programming embedded on a computer readable medium, i.e., computer-based application software (may also be referred to herein as informatics software or programming or the like) that processes analyte information obtained from the system and/or user self-reported data. Application software may be installed on a host computer such as a mobile telephone, PC, an Internet-enabled human interface device such as an Internet-enabled phone, personal digital assistant, or the like, by a display device or an on body electronics unit. Informatics programming may transform data acquired and stored on a display device or on body unit for use by a user.

Embodiments of the subject disclosure are described primarily with respect to glucose monitoring devices and systems, and methods of glucose monitoring, for convenience only and such description is in no way intended to limit the scope of the disclosure. It is to be understood that

the analyte monitoring system may be configured to monitor a variety of analytes at the same time or at different times.

As described in detail below, embodiments include devices, systems, kits and/or methods to monitor one or more physiological parameters such as, for example, but not limited to, analyte levels, temperature levels, heart rate, user activity level, over a predetermined monitoring time period. Also provided are methods of manufacturing. Predetermined monitoring time periods may be less than about 1 hour, or may include about 1 hour or more, e.g., about a few hours or more, e.g., about a few days of more, e.g., about 3 or more days, e.g., about 5 days or more, e.g., about 7 days or more, e.g., about 10 days or more, e.g., about 14 days or more, e.g., about several weeks, e.g., about 1 month or more. In certain embodiments, after the expiration of the predetermined monitoring time period, one or more features of the system may be automatically deactivated or disabled at the on body electronics assembly and/or display device.

For example, a predetermined monitoring time period may begin with positioning the sensor in vivo and in contact with a body fluid such as ISF, and/or with the initiation (or powering on to full operational mode) of the on body electronics. Initialization of on body electronics may be implemented with a command generated and transmitted by a display device in response to the activation of a switch and/or by placing the display device within a predetermined distance (e.g., close proximity) to the on body electronics, or by user manual activation of a switch on the on body electronics unit, e.g., depressing a button, or such activation may be caused by the insertion device, e.g., as described in U.S. patent application Ser. No. 12/698,129, filed on Feb. 1, 2010, and U.S. Provisional Application Nos. 61/238,646, 61/246,825, 61/247,516, 61/249,535, 61/317,243, 61/345,562, and 61/361,374, the disclosures of each of which are incorporated herein by reference for all purposes.

When initialized in response to a received command from a display device, the on body electronics retrieves and executes from its memory software routine to fully power on the components of the on body electronics, effectively placing the on body electronics in full operational mode in response to receiving the activation command from the display device. For example, prior to the receipt of the command from the display device, a portion of the components in the on body electronics may be powered by its internal power supply such as a battery while another portion of the components in the on body electronics may be in powered down or maintained in a low power state including no power state, inactive mode, or all components may be in an inactive, powered down mode. Upon receipt of the command, the remaining portion (or all) of the components of the on body electronics is switched to active, fully operational mode.

Embodiments of on body electronics may include one or more printed circuit boards with electronics including control logic implemented in ASIC, microprocessors, memory, and the like, and transcutaneously positionable analyte sensors forming a single assembly. On body electronics may be configured to provide one or more signals or data packets associated with a monitored analyte level upon detection of a display device of the analyte monitoring system within a predetermined proximity for a period of time (for example, about 2 minutes, e.g., 1 minute or less, e.g., about 30 seconds or less, e.g., about 10 seconds or less, e.g., about 5 seconds or less, e.g., about 2 seconds or less) and/or until a confirmation, such as an audible and/or visual and/or tactile (e.g., vibratory) notification, is output on the display device indicating successful acquisition of the analyte related signal from the on body electronics. A distinguishing notification may also be output for unsuccessful acquisition in certain embodiments.

In certain embodiments, the monitored analyte level may be correlated and/or converted to glucose levels in blood or other fluids such as ISF. Such conversion may be accomplished with the on body electronics, but in many embodiments will be accomplished with display device electronics. In certain embodiments, glucose level is derived from the monitored analyte level in the ISF.

Analyte sensors may be insertable into a vein, artery, or other portion of the body containing analyte. In certain embodiments, analyte sensors may be positioned in contact with ISF to detect the level of analyte, where the detected analyte level may be used to infer the user's glucose level in blood or interstitial tissue.

Embodiments include transcutaneous sensors and also wholly implantable sensors and wholly implantable assemblies in which a single assembly including the analyte sensor and electronics are provided in a sealed housing (e.g., hermetically sealed biocompatible housing) for implantation in a user's body for monitoring one or more physiological parameters.

Embodiments include analyte monitors that are provided in small, lightweight, battery-powered and electronically-controlled systems. Such systems may be configured to detect physical parameters of subjects, such as signals indicative of in vivo analyte levels using an electrochemical sensor, and collect such signals, with or without processing. Any suitable measurement technique may be used to obtain signals from the sensors, e.g., may detect current, may employ potentiometry, etc. Techniques may include, but are not limited to amperometry, coulometry, and voltammetry. In some embodiments, sensing systems may be optical, colorimetric, and the like. In some embodiments, the portion of the system that performs this initial processing may be configured to provide the raw or at least initially processed data to another unit for further collection and/or processing. Such provision of data may be affected, for example, by a wired connection, such as an electrical, or by a wireless connection, such as an IR or RF connection.

In certain systems, the analyte sensor is in communication with on body electronics. The on-body unit may include a housing in which the on body electronics and at least a portion of the sensor are received.

Certain embodiments are modular. The on-body unit may be separately provided as a physically distinct assembly from a monitor unit, e.g., which displays or otherwise indicates analyte levels to a user. The on-body unit may be configured to provide the analyte levels detected by the sensor and/or other information (such as temperature, sensor life, etc.) over a communication link to the monitor unit. The monitor unit, in some embodiments, may include, e.g., a mobile telephone device, an in vitro glucose meter, a personal digital assistant, or other consumer electronics such as MP3 device, camera, radio, personal computer, etc., or other communication-enabled data-processing device.

The display unit may perform a variety of functions such as but not limited to data storage and/or processing and/or analysis and/or communication, etc., on the received analyte data to generate information pertaining to the monitored analyte levels and/or process the other information. The monitor unit may incorporate a display screen, which can be used, for example, to display measured analyte levels, and/or an audio component such as a speaker to audibly provide information to a user, and/or a vibration device to provide tactile feedback to a user. It is also useful for a user

of an analyte-monitoring system to be able to see trend indications (including the magnitude and direction of any ongoing trend, e.g., the rate of change of an analyte or other parameter, and the amount of time a subject is above and/or below a threshold, such as a hypoglycemic and/or hyperglycemic threshold, etc.); such data may be displayed either numerically, or by a visual indicator such as an arrow that may vary in visual attributes, like size, shape, color, animation, or direction. The monitor unit may further be adapted to receive information from or about an in vitro analyte test strip, which may be manually or automatically entered into the monitor unit. In some embodiments a monitor unit may incorporate an in vitro analyte test strip port and related electronics in order to be able to make discrete (e.g., blood glucose) measurements using an in vitro test strip (see, e.g., U.S. Pat. No. 6,175,752, the disclosure of which is incorporated by reference herein for all purposes).

The modularity of these systems may vary where one or more components may be constructed to be single use and one or more may be constructed to be re-useable. In some embodiments the sensor is designed to be attachable and detachable from the on body electronics (and the on-body unit may be reusable), e.g., so that one or more of the components may be reused one or more times, while in other embodiments, the sensor and on body electronics may be provided as an integrated, undetachable package, which may be designed to be disposable after use, i.e., not re-used.

Embodiments of In Vivo Monitoring Systems

For purpose of illustration, and not limitation, the inserters described herein may be used in connection with an exemplary analyte monitoring system as depicted in FIG. **1**. It is understood that the inserters described herein may be used with any medical device on its own or in connection with a system. FIG. **1** shows an exemplary in vivo-based analyte monitoring system **100** in accordance with embodiments of the present disclosure. As shown, in certain embodiments, analyte monitoring system **100** includes on body electronics **1100** electrically coupled to in vivo analyte sensor **14** (a proximal portion of which is shown in FIG. **1**, and attached to adhesive layer **218** for attachment on a skin surface on the body of a user. On body electronics **1100** includes on body housing **122** that defines an interior compartment.

Also shown in FIG. **1** is insertion device **200** (or insertion devices **300**, **400**, **2400**, **2500**, **2700**, **3700** described herein) that, when operated, transcutaneously positions a portion of analyte sensor **14** through a skin surface and in fluid contact with ISF, and positions on body electronics **1100** and adhesive layer **218** on a skin surface, as will be described in greater detail herein. In certain embodiments, on body electronics **1100**, analyte sensor **14** and adhesive layer **218** are sealed within the housing of insertion device **200** before use, and in certain embodiments, adhesive layer **218** is also sealed within the housing or the adhesive layer can provide a seal for preserving the sterility of the apparatus. Additional details regarding insertion devices are discussed, e.g., in U.S. patent application Ser. No. 12/698,129 and U.S. Provisional Application Nos. 61/238,646, 61/246,825, 61/247,516, 61/249,535, and 61/345,562, the disclosures of each of which are incorporated herein by reference for all purposes.

Referring back to the FIG. **1**, analyte monitoring system **100** includes display device **1200** which includes a display **1220** to output information to the user, an input component **1210** such as a button, actuator, a touch sensitive switch, a capacitive switch, pressure sensitive switch, jog wheel or the like, to input data or command to display device **1200** or otherwise control the operation of display device **1200**. It is noted that some embodiments may include display-less devices or devices without any user interface components. These devices may be functionalized to store data as a data logger and/or provide a conduit to transfer data from on body electronics and/or a display-less device to another device and/or location. Embodiments will be described herein as display devices for exemplary purposes which are in no way intended to limit the embodiments of the present disclosure. It will be apparent that display-less devices may also be used in certain embodiments.

In certain embodiments, on body electronics **1100** may be configured to store some or all of the monitored analyte related data received from analyte sensor **14** in a memory during the monitoring time period, and maintain it in memory until the usage period ends. In such embodiments, stored data is retrieved from on body electronics **1100** at the conclusion of the monitoring time period, for example, after removing analyte sensor **14** from the user by detaching on body electronics **1100** from the skin surface where it was positioned during the monitoring time period. In such data logging configurations, real time monitored analyte level is not communicated to display device **1200** during the monitoring period or otherwise transmitted from on body electronics **1100**, but rather, retrieved from on body electronics **1100** after the monitoring time period.

In certain embodiments, input component **1210** of display device **1200** may include a microphone and display device **1200** may include software configured to analyze audio input received from the microphone, such that functions and operation of the display device **1200** may be controlled by voice commands. In certain embodiments, an output component of display device **1200** includes a speaker for outputting information as audible signals. Similar voice responsive components such as a speaker, microphone and software routines to generate, process and store voice driven signals may be provided to on body electronics **1100**.

In certain embodiments, display **1220** and input component **1210** may be integrated into a single component, for example a display that can detect the presence and location of a physical contact touch upon the display such as a touch screen user interface. In such embodiments, the user may control the operation of display device **1200** by utilizing a set of pre-programmed motion commands, including, but not limited to, single or double tapping the display, dragging a finger or instrument across the display, motioning multiple fingers or instruments toward one another, motioning multiple fingers or instruments away from one another, etc. In certain embodiments, a display includes a touch screen having areas of pixels with single or dual function capacitive elements that serve as LCD elements and touch sensors.

Display device **1200** also includes data communication port **1230** for wired data communication with external devices such as remote terminal (personal computer) **1700**, for example. Example embodiments of the data communication port **1230** include USB port, mini USB port, RS-232 port, Ethernet port, Firewire port, or other similar data communication ports configured to connect to the compatible data cables. Display device **1200** may also include an integrated in vitro glucose meter, including in vitro test strip port **1240** to receive an in vitro glucose test strip for performing in vitro blood glucose measurements.

Referring still to FIG. **1**, display **1220** in certain embodiments is configured to display a variety of information—some or all of which may be displayed at the same or different time on display **1220**. In certain embodiments the

displayed information is user-selectable so that a user can customize the information shown on a given display screen. Display **1220** may include but is not limited to graphical display **1380**, for example, providing a graphical output of glucose values over a monitored time period (which may show important markers such as meals, exercise, sleep, heart rate, blood pressure, etc., numerical display **1320**, for example, providing monitored glucose values (acquired or received in response to the request for the information), and trend or directional arrow display **1310** that indicates a rate of analyte change and/or a rate of the rate of analyte change, e.g., by moving locations on display **1220**.

As further shown in FIG. **1**, display **1220** may also include date display **1350** providing for example, date information for the user, time of day information display **1390** providing time of day information to the user, battery level indicator display **1330** which graphically shows the condition of the battery (rechargeable or disposable) of the display device **1200**, sensor calibration status icon display **1340** for example, in monitoring systems that require periodic, routine or a predetermined number of user calibration events, notifying the user that the analyte sensor calibration is necessary, audio/vibratory settings icon display **1360** for displaying the status of the audio/vibratory output or alarm state, and wireless connectivity status icon display **1370** that provides indication of wireless communication connection with other devices such as on body electronics, data processing module **1600**, and/or remote terminal **1700**. As additionally shown in FIG. **1**, display **1220** may further include simulated touch screen button **1250**, **1260** for accessing menus, changing display graph output configurations or otherwise for controlling the operation of display device **1200**.

Referring back to FIG. **1**, in certain embodiments, display **1220** of display device **1200** may be additionally, or instead of visual display, configured to output alarms notifications such as alarm and/or alert notifications, glucose values etc., which may be audible, tactile, or any combination thereof. In one aspect, the display device **1200** may include other output components such as a speaker, vibratory output component and the like to provide audible and/or vibratory output indication to the user in addition to the visual output indication provided on display **1220**. Further details and other display embodiments can be found in, e.g., U.S. patent application Ser. No. 12/871,901, U.S. Provisional Application Nos. 61/238,672, 61/247,541, 61/297,625, the disclosures of each of which are incorporated herein by reference for all purposes.

After the positioning of on body electronics **1100** on the skin surface and analyte sensor **14** in vivo to establish fluid contact with ISF (or other appropriate body fluid), on body electronics **1100** in certain embodiments is configured to wirelessly communicate analyte related data (such as, for example, data corresponding to monitored analyte level and/or monitored temperature data, and/or stored historical analyte related data) when on body electronics **1100** receives a command or request signal from display device **1200**. In certain embodiments, on body electronics **1100** may be configured to at least periodically broadcast real time data associated with monitored analyte level which is received by display device **1200** when display device **1200** is within communication range of the data broadcast from on body electronics **1100**, i.e., it does not need a command or request from a display device to send information.

For example, display device **1200** may be configured to transmit one or more commands to on body electronics **1100** to initiate data transfer, and in response, on body electronics **1100** may be configured to wirelessly transmit stored analyte related data collected during the monitoring time period to display device **1200**. Display device **1200** may in turn be connected to a remote terminal **1700** such as a personal computer and functions as a data conduit to transfer the stored analyte level information from the on body electronics **1100** to remote terminal **1700**. In certain embodiments, the received data from the on body electronics **1100** may be stored (permanently or temporarily) in one or more memory of the display device **1200**. In certain other embodiments, display device **1200** is configured as a data conduit to pass the data received from on body electronics **1100** to remote terminal **1700** that is connected to display device **1200**.

Referring still to FIG. **1**, also shown in analyte monitoring system **1000** are data processing module **1600** and remote terminal **1700**. Remote terminal **1700** may include a personal computer, a server terminal a laptop computer or other suitable data processing devices including software for data management and analysis and communication with the components in the analyte monitoring system **1000**. For example, remote terminal **1700** may be connected to a local area network (LAN), a wide area network (WAN), or other data network for uni-directional or bi-directional data communication between remote terminal **1700** and display device **1200** and/or data processing module **1600**.

Remote terminal **1700** in certain embodiments may include one or more computer terminals located at a physician's office or a hospital. For example, remote terminal **1700** may be located at a location other than the location of display device **1200**. Remote terminal **1700** and display device **1200** could be in different rooms or different buildings. Remote terminal **1700** and display device **1200** could be at least about one mile apart, e.g., at least about 100 miles apart, e.g., at least about 1000 miles apart. For example, remote terminal **1700** could be in the same city as display device **1200**, remote terminal **1700** could be in a different city than display device **1200**, remote terminal **1700** could be in the same state as display device **1200**, remote terminal **1700** could be in a different state than display device **1200**, remote terminal **1700** could be in the same country as display device **1200**, or remote terminal **1700** could be in a different country than display device **1200**, for example.

In certain embodiments, a separate, optional data communication/processing device such as data processing module **1600** may be provided in analyte monitoring system **1000**. Data processing module **1600** may include components to communicate using one or more wireless communication protocols such as, for example, but not limited to, infrared (IR) protocol, Bluetooth® protocol, Zigbee protocol, and 802.11 wireless LAN protocol. Additional description of communication protocols including those based on Bluetooth® protocol and/or Zigbee protocol can be found in U.S. Patent Publication No. 2006/0193375, incorporated herein by reference for all purposes. Data processing module **1600** may further include communication ports, drivers or connectors to establish wired communication with one or more of display device **1200**, on body electronics **1100**, or remote terminal **1700** including, for example, but not limited to USB connector and/or USB port, Ethernet connector and/or port, FireWire connector and/or port, or RS-232 port and/or connector.

In certain embodiments, data processing module **1600** is programmed to transmit a polling or query signal to on body electronics **1100** at a predetermined time interval (e.g., once every minute, once every five minutes, or the like), and in response, receive the monitored analyte level information from on body electronics **1100**. Data processing module

1600 stores in its memory the received analyte level information, and/or relays or retransmits the received information to another device such as display device 1200. More specifically in certain embodiments, data processing module 1600 may be configured as a data relay device to retransmit or pass through the received analyte level data from on body electronics 1100 to display device 1200 or a remote terminal (for example, over a data network such as a cellular or WiFi data network) or both.

In certain embodiments, on body electronics 1100 and data processing module 1600 may be positioned on the skin surface of the user within a predetermined distance of each other (for example, about 1-12 inches, or about 1-10 inches, or about 1-7 inches, or about 1-5 inches) such that periodic communication between on body electronics 1100 and data processing module 1600 is maintained. Alternatively, data processing module 1600 may be worn on a belt or clothing item of the user, such that the desired distance for communication between the on body electronics 1100 and data processing module 1600 for data communication is maintained. In a further aspect, the housing of data processing module 1600 may be configured to couple to or engage with on body electronics 1100 such that the two devices are combined or integrated as a single assembly and positioned on the skin surface. In further embodiments, data processing module 1600 is detachably engaged or connected to on body electronics 1100 providing additional modularity such that data processing module 1600 may be optionally removed or reattached as desired.

Referring again to FIG. 1, in certain embodiments, data processing module 1600 is programmed to transmit a command or signal to on body electronics 1100 at a predetermined time interval such as once every minute, or once every 5 minutes or once every 30 minutes or any other suitable or desired programmable time interval to request analyte related data from on body electronics 1100. When data processing module 1600 receives the requested analyte related data, it stores the received data. In this manner, analyte monitoring system 1000 may be configured to receive the continuously monitored analyte related information at the programmed or programmable time interval, which is stored and/or displayed to the user. The stored data in data processing module 1600 may be subsequently provided or transmitted to display device 1200, remote terminal 1700 or the like for subsequent data analysis such as identifying frequency of periods of glycemic level excursions over the monitored time period, or the frequency of the alarm event occurrence during the monitored time period, for example, to improve therapy related decisions. Using this information, the doctor, healthcare provider or the user may adjust or recommend modification to the diet, daily habits and routines such as exercise, and the like.

In another embodiment, data processing module 1600 transmits a command or signal to on body electronics 1100 to receive the analyte related data in response to a user activation of a switch provided on data processing module 1600 or a user initiated command received from display device 1200. In further embodiments, data processing module 1600 is configured to transmit a command or signal to on body electronics 1100 in response to receiving a user initiated command only after a predetermined time interval has elapsed. For example, in certain embodiments, if the user does not initiate communication within a programmed time period, such as, for example about 5 hours from last communication (or 10 hours from the last communication, or 24 hours from the last communication), the data processing module 1600 may be programmed to automatically transmit a request command or signal to on body electronics 1100. Alternatively, data processing module 1600 may be programmed to activate an alarm to notify the user that a predetermined time period of time has elapsed since the last communication between the data processing module 1600 and on body electronics 1100. In this manner, users or healthcare providers may program or configure data processing module 1600 to provide certain compliance with analyte monitoring regimen, so that frequent determination of analyte levels is maintained or performed by the user.

In certain embodiments, when a programmed or programmable alarm condition is detected (for example, a detected glucose level monitored by analyte sensor 14 that is outside a predetermined acceptable range indicating a physiological condition) which requires attention or intervention for medical treatment or analysis (for example, a hypoglycemic condition, a hyperglycemic condition, an impending hyperglycemic condition or an impending hypoglycemic condition), the one or more output indications may be generated by the control logic or processor of the on body electronics 1100 and output to the user on a user interface of on body electronics 1100 so that corrective action may be timely taken. In addition to or alternatively, if display device 1200 is within communication range, the output indications or alarm data may be communicated to display device 1200 whose processor, upon detection of the alarm data reception, controls the display 1220 to output one or more notification.

In certain embodiments, control logic or microprocessors of on body electronics 1100 include software programs to determine future or anticipated analyte levels based on information obtained from analyte sensor 14, e.g., the current analyte level, the rate of change of the analyte level, the acceleration of the analyte level change, and/or analyte trend information determined based on stored monitored analyte data providing a historical trend or direction of analyte level fluctuation as function time during monitored time period. Predictive alarm parameters may be programmed or programmable in display device 1200, or the on body electronics 1100, or both, and output to the user in advance of anticipating the user's analyte level reaching the future level. This provides the user an opportunity to take timely corrective action.

Information, such as variation or fluctuation of the monitored analyte level as a function of time over the monitored time period providing analyte trend information, for example, may be determined by one or more control logic or microprocessors of display device 1200, data processing module 1600, and/or remote terminal 1700, and/or on body electronics 1100. Such information may be displayed as, for example, a graph (such as a line graph) to indicate to the user the current and/or historical and/or and predicted future analyte levels as measured and predicted by the analyte monitoring system 1000. Such information may also be displayed as directional arrows (for example, see trend or directional arrow display 1310) or other icon(s), e.g., the position of which on the screen relative to a reference point indicated whether the analyte level is increasing or decreasing as well as the acceleration or deceleration of the increase or decrease in analyte level. This information may be utilized by the user to determine any necessary corrective actions to ensure the analyte level remains within an acceptable and/or clinically safe range. Other visual indicators, including colors, flashing, fading, etc., as well as audio indicators including a change in pitch, volume, or tone of an audio output and/or vibratory or other tactile indicators may also be incorporated into the display of trend data as means of notifying the user of the current level and/or direction

and/or rate of change of the monitored analyte level. For example, based on a determined rate of glucose change, programmed clinically significant glucose threshold levels (e.g., hyperglycemic and/or hypoglycemic levels), and current analyte level derived by an in vivo analyte sensor, the system **1000** may include an algorithm stored on computer readable medium to determine the time it will take to reach a clinically significant level and will output notification in advance of reaching the clinically significant level, e.g., 30 minutes before a clinically significant level is anticipated, and/or 20 minutes, and/or 10 minutes, and/or 5 minutes, and/or 3 minutes, and/or 1 minute, and so on, with outputs increasing in intensity or the like.

Referring again back to FIG. **1**, in certain embodiments, software algorithm(s) for execution by data processing module **1600** may be stored in an external memory device such as an SD card, microSD card, compact flash card, XD card, Memory Stick card, Memory Stick Duo card, or USB memory stick/device including executable programs stored in such devices for execution upon connection to the respective one or more of the on body electronics **1100**, remote terminal **1700** or display device **1200**. In a further aspect, software algorithms for execution by data processing module **1600** may be provided to a communication device such as a mobile telephone including, for example, WiFi or Internet enabled smart phones or personal digital assistants (PDAs) as a downloadable application for execution by the downloading communication device.

Examples of smart phones include Windows®, Android™, iPhone® operating system, Palm® WebOS™, Blackberry® operating system, or Symbian® operating system based mobile telephones with data network connectivity functionality for data communication over an internet connection and/or a local area network (LAN). PDAs as described above include, for example, portable electronic devices including one or more microprocessors and data communication capability with a user interface (e.g., display/output unit and/or input unit, and configured for performing data processing, data upload/download over the internet, for example. In such embodiments, remote terminal **1700** may be configured to provide the executable application software to the one or more of the communication devices described above when communication between the remote terminal **1700** and the devices are established.

In still further embodiments, executable software applications may be provided over-the-air (OTA) as an OTA download such that wired connection to remote terminal **1700** is not necessary. For example, executable applications may be automatically downloaded as software download to the communication device, and depending upon the configuration of the communication device, installed on the device for use automatically, or based on user confirmation or acknowledgement on the communication device to execute the installation of the application. The OTA download and installation of software may include software applications and/or routines that are updates or upgrades to the existing functions or features of data processing module **1600** and/or display device **1200**.

Referring back to remote terminal **1700** of FIG. **1**, in certain embodiments, new software and/or software updates such as software patches or fixes, firmware updates or software driver upgrades, among others, for display device **1200** and/or on body electronics **1100** and/or data processing module **1600** may be provided by remote terminal **1700** when communication between the remote terminal **1700** and display device **1200** and/or data processing module **1600** is established. For example, software upgrades, executable programming changes or modification for on body electronics **1100** may be received from remote terminal **1700** by one or more of display device **1200** or data processing module **1600**, and thereafter, provided to on body electronics **1100** to update its software or programmable functions. For example, in certain embodiments, software received and installed in on body electronics **1100** may include software bug fixes, modification to the previously stalled software parameters (modification to analyte related data storage time interval, resetting or adjusting time base or information of on body electronics **1100**, modification to the transmitted data type, data transmission sequence, or data storage time period, among others). Additional details describing field upgradability of software of portable electronic devices, and data processing are provided in U.S. application Ser. Nos. 12/698,124, 12/794,721, 12/699,653, and 12/699,844, and U.S. Provisional Application Nos. 61/359,265, and 61/325,155 the disclosures of which are incorporated by reference herein for all purposes.

The Sensor

The analyte sensor **14** of the analyte measurement system **100** may be used to monitor levels of a wide variety of analytes. Analytes that may be monitored include, for example, acetylcholine, amylase, bilirubin, cholesterol, chorionic gonadotropin, creatine kinase (e.g., CK-MB), creatine, DNA, fructosamine, glucose, glutamine, growth hormones, hormones, ketones, lactate, peroxide, prostate-specific antigen, prothrombin, RNA, thyroid-stimulating hormone, and troponin. The concentration of drugs, such as, for example, antibiotics (e.g., gentamicin, vancomycin, and the like), digitoxin, digoxin, drugs of abuse, theophylline, and warfarin, may also be monitored. One or more analyte may be monitored by a given sensor. In those embodiments that monitor more than one analyte, the analytes may be monitored at the same or different times, which may use the same on body electronics (e.g., simultaneously) or with different on body electronics.

In one embodiment of the present disclosure, sensor **14** is physically positioned in or on the body of a user whose analyte level is being monitored. Sensor **14** may be configured to continuously sample the analyte level of the user and convert the sampled analyte level, e.g., glucose concentration into a corresponding data signal, e.g., a current or voltage, for input into on body electronics. Alternatively, sensor **14** may be configured to sample analyte levels on demand. The on body electronics may amplify, filter, average, and/or otherwise process signal provided by the sensor.

An embodiment of the sensor **14** is illustrated in FIG. **2**. It is understood that the inserters described herein can be used with other medical devices. The shape(s) described herein are exemplary only. Other sensor shapes are contemplated. In some embodiments, sensor **14** includes a substrate which is a dielectric, e.g., a polymer or plastic material, such as polyester or polyamide. In this embodiment, the sensor is constructed so that a portion is positionable beneath skin and a portion is above skin. Accordingly, sensor **14** includes an insertion or internal portion **30** and an external or electrical contact portion **32**. In some embodiments, the contact portion **32** includes several conductive contacts **36**, **38**, and **40** (herein shown as three contacts) for connection to other electronics, e.g., at the on body electronics **1100**. (See FIG. **1**.) The contacts provided in this embodiment are for a working electrode, a reference electrode, and a counter electrode. In some embodiments, two or more working electrodes are provided. The operative portions of these

electrodes, that is, working electrode, reference electrode, and counter electrode (not individually shown), are provided at the insertion portion, e.g., at the distal end of insertion portion **30**, e.g., portion **34**. In some embodiments, one or more electrodes may be external to the body, e.g., an external counter electrode. The contact and operative portions of the electrodes are connected by circuit traces **42**, **44**, and **46** running on the surface of the substrate. In some embodiments, the traces are provided in channels, or may be embedded within the substrate, or may traverse different sides of the substrate. The conductive contacts, conductive traces, and electrodes are fabricated from conductive material, such as platinum, palladium, gold, carbon, or the like. More than one material may be used for a given sensor. Further details of sensors are described, e.g., in U.S. Pat. Nos. 6,175,572 and 6,103,033, which are incorporated by reference herein for all purposes.

Sensor **14** may include a proximal retention portion **48**. The insertion portion **30** and the proximal retention portion **48** are sized and configured to be positioned with a sharp for installation into the skin of a subject, as described herein. In use, the sensor **14** may be configured to bend (e.g., along the line B) and therefore be positioned in two substantially perpendicular, intersecting planes. Such bending may occur prior to or during coupling to the on body electronics as described below. (See FIG. **17**).

Portions **48** and **52** provide a path for electrical connections, e.g., the conductive traces, between the proximal and distal portions of the sensor. Sensor **14** is further provided with a notch or cut-out **54**. Such configuration facilitates the sensor **14** to bend (e.g., along the line indicated by line B) such that retention portion **48** remains upright and therefore be positioned in two substantially perpendicular, intersecting planes, as illustrated in FIG. **3**. As will be described below, the sensor tab **50** can be encased in the on body housing **122** to aid in securing and positioning the sensor **14**. Proximal retention portion **48** maintains its longitudinal alignment with insertion portion **30** for positioning within an insertion sharp.

Embodiments of analyte sensors have been described herein to operate electrochemically, through an arrangement of electrodes having chemical sensing layers applied thereto, by generating an electrical current proportional to the volume of a redox reaction of the analyte (and indicative of analyte concentration), catalyzed by an analyte-specific oxidizing enzyme. Embodiments exist in which the number of electrodes provided to bring about and detect the level of these reactions is two, three, or a greater number. However, other types of sensors may be employed as described herein.

A portion of sensor **14** may be situated above the surface of the skin, with a distal portion **30** penetrating through the skin and into the subcutaneous space in contact with the user's biofluid, such as ISF. Further details regarding the electrochemistry of sensor **14** is provided in U.S. Pat. Nos. 5,264,104; 5,356,786; 5,262,035; 5,320,725; and 6,990,366, each of which is incorporated by reference herein for all purposes.

In some embodiments, the sensor is implantable into a subject's body for a usage period (e.g., a minute or more, at least one day or more, about one to about 30 days or even longer, about three to about fourteen days, about three to about seven days, or in some embodiments, longer periods of up to several weeks) to contact and monitor an analyte present in a biological fluid. In this regard, the sensor can be disposed in a subject at a variety of sites (e.g., abdomen, upper arm, thigh, etc.), including intramuscularly, transcutaneously, intravascularly, or in a body cavity.

In some embodiments, sensor **14** is employed by insertion and/or implantation into a user's body for some usage period. In such embodiments, the substrate may be formed from a relatively flexible material.

While the embodiments illustrated in FIGS. **2-3** have three electrodes, other embodiments can include a fewer or greater number of electrodes. For example, a two-electrode sensor can be utilized. The sensor **14** may be externally-powered and allow a current to pass which is proportional to the amount of analyte present. Alternatively, the sensor **14** itself may act as a current source in some embodiments. In some two-electrode embodiments, the sensor may be self-biasing and there may be no need for a reference electrode. An exemplary self-powered, two-electrode sensor is described in U.S. patent application Ser. No. 12/393,921, filed Feb. 26, 2009, and entitled "Self-Powered Analyte Sensor," which is hereby incorporated by reference herein for all purposes. The level of current provided by a self-powered sensor may be low, for example, on the order of nanoamperes, in certain embodiments.

Insertion Assembly

Insertion assemblies are provided, which are used to install a medical device to the subject. In some embodiments, an insertion assembly includes an inserter and the medical device itself. The inserter can be configured to insert various medical devices into the subject, such as for example, an analyte sensor, an infusion set, or a cannula. In some embodiments, the inserter can be configured to install a combination of such devices, e.g., a combined sensor/infusion set, etc., at the same or different times or locations. For example, in certain embodiments a given inserter can be configured to install a first device and a second device at different times. In this regard, the inserter can be reusable. For example, an inserter may be modifiable to be used with more than one medical device, to include more than one type of medical device, e.g., by attaching an adapter and/or removing detaching a portion of an inserter. The inserter can install the medical device in, under, or through the skin of the subject, or place the medical device on the surface of the skin. The medical device can include features or structures, e.g., barbs, tabs, adhesive, etc., to maintain the device in position with respect to the skin after insertion. The inserter device may also be used as a lancet, e.g., to pierce the skin without inserting or installing a medical device.

In some embodiments, an insertion assembly includes an inserter, an analyte sensor, and a power supply. The power supply may be applied to the patient, e.g., to the surface of the skin, simultaneously with the analyte sensor by the inserter. In other embodiments, the battery is installed after or before installation of the analyte sensor. In such case the power supply may be applied by the inserter or separately. The power supply may be used to provide a current or a potential to the sensor and/or to provide power for communication of one or more signals to the monitor unit.

In some embodiments, an insertion assembly includes an inserter, a medical device such as an analyte sensor, and on body electronics. The on body electronics may be deployed and/or installed simultaneously with the analyte sensor by the inserter. In other embodiments, the on body electronics are installed after or before installation of the analyte sensor. For example, the analyte sensor may be installed by the inserter, and the on body electronics may be subsequently installed.

In some embodiments, the on body electronics provide a voltage or current to the analyte sensor. In some embodi-

ments, the on body electronics process signals provided by the analyte sensor. In further embodiments, the on body electronics may include communications functionality for providing signal relating to signal provided by the analyte sensor to a further component, such as, e.g., a monitor unit, a computer, or other component. In some embodiments, communications circuitry, such as an RFID antenna, is provided. The power supply may be used to power some or all of these functions. In some embodiments, power is provided from the monitor unit, e.g., via inductive coupling.

An inserter can include a plurality of different components. For example, an inserter may include one or more components for advancing a sharp towards the skin of the subject. The sensor and on body electronics may be supported by a support structure, such as a carriage. A driver may be provided for advancing the sharp and/or the analyte sensor/support structure towards the skin of the patient. In some embodiments, the actuator is directly or indirectly coupled to the sharp and/or support structure, such that manual force applied by the user to the actuator is transferred to the sharp and/or support structure. In some embodiments, the applied force drives the sharp and/or support structure between a retracted position (disposed within the insertion device) and an advanced position (disposed towards the skin of the patient). In some embodiments, the sensor and on body electronics is maintained in a retracted position prior to installation by contacting projections extending inwardly from a recess in the inserter. In accordance with this embodiment, the sensor and on body electronics are temporarily maintained operatively between the support structure and the projections disposed on the interior wall of the sheath.

An inserter can also include one or more components for retracting the sharp, while allowing the analyte sensor and optional on body electronics to remain on the subject. The components for retracting the sharp can include a retractor. It is understood that the retractor and the actuator may be the same structure or include some common components. In some embodiments, the retractor is directly or indirectly coupled to the sharp such that the manual force applied by the user is transferred from the retractor to the sharp to retract the sharp from the skin. In other embodiments, a drive assembly may be provided to retract the sharp. For example, the drive assembly may include a spring, motor, hydraulic piston, etc., to retract the sharp away from the skin of the subject. The drive assembly may also include a linear drive component.

In some embodiments, the retractor withdraws the sharp upon actuation by the user. In such cases, the user actuates the retractor when it is desired to withdraw the sharp. For example, the retractor may include a release switch. Upon activation of the release switch, the drive assembly, e.g., the spring or other driver, retracts the sharp from the skin. In other embodiments, the retractor and the actuator include common components. After activating the actuator to advance the sharp and the analyte sensor, the user releases the actuator, which allows the drive assembly to withdraw the sharp from the skin.

In some embodiments, the retractor withdraws the sharp without further user interaction after actuation of insertion. For example, the inserter may include features or components which automatically retract the sharp upon advancement of the sharp and support structure by a predetermined amount. Inserter devices, in which no further action by the user is required to initiate withdrawal of the sharp after insertion, are referred to herein as having "automatic" withdrawal of the sharp.

Inserter Devices

An inserter **200** in accordance with an exemplary embodiment is illustrated in FIG. **4**. Inserter **200** includes a housing **202** and a removable distal cap **204** for maintaining a sterile environment for the medical device and sharp housed therein. In some embodiments, inserter **200** has a maximum diameter, of about 30 mm to about 60 mm, e.g., about 40 mm, about 43 mm, about 43.5 mm, about 50.5 mm, about 54.5 mm, etc. In some embodiments, inserter **200** has a maximum height of about 40 mm to about 80 mm, e.g., about 44 mm, about 46 mm, about 50 mm, about 53 mm, about 67 mm, about 71 mm, etc. In some embodiments, inserter **200** has a volume of about 35 cm^3 to about 110 cm^3, e.g., about 40 cm^3, about 41 cm^3, about 50 cm^3, about 60 cm^3, about 61 cm^3, about 62 cm^3, about 69 cm^3, about 70 cm^3, about 79 cm^3, about 90 cm^3, about 106 cm^3, etc. In the case of inserter **200**, the dimensions are defined with respect to the housing **202**.

Housing **202** and distal cap **204** may be fabricated from any suitable materials such as metal, plastic, etc. In some embodiments cap **204** may be fabricated from a polymer or plastic material. Also provided is a removable proximal cover **206**, which, among other things, prevents accidental deployment of the inserter **200** and maintains a sterile environment. In some embodiments, proximal cover **206** is a sheet of material such as a foil sheet or the like secured to the upper surface of housing **202** using an adhesive, and may include a tab **208** to assist removal of the cover **206**. Proximal cover **206** may also be a plastic sheet or member that forms a seal with housing **202**. In some embodiments, proximal cover **206** may include a pull tab or a perforated section for easy removal.

As illustrated in FIG. **5**, proximal cover **206** and distal cap **204** are shown removed from inserter **200**. Distal cap **204** is secured to housing **202**, e.g., by use of threads **210**. In some embodiments, distal cap **204** is secured by a friction fit, snap fit, a bayonet mount, an adhesive, etc. The distal portion of cap **204** may include a recess for retaining a desiccant therein. In some embodiments, a silica gel or molecular sieves may be used. Such material can be in granular form (pellets) or pressed into tablets, or otherwise. In some embodiments, silica gel tablets are used. Embodiments may include desiccant and/or packaging as described in U.S. patent application Ser. No. 12/714,439, which is incorporated by reference herein for all purposes. Cap **204** may be provided with one or more apertures, which allows for passage of air to the desiccant to remove moisture from the interior of the inserter **200**.

Housing **202** includes a distal portion **212** for placement on the skin of a subject. Inserter **200** includes an actuator **214** to advance a medical device into the skin of the subject. In some embodiments, actuator **214** is disposed within an opening **216** in housing **202** and can be longitudinally moveable within housing **202**.

The distal portion of inserter **200** is illustrated in FIG. **6**. In some embodiments, an adhesive pad **218**, having adhesive material **218** on both faces, is provided across the distal portion **212** of the housing **202**. A central aperture **220** may be provided in adhesive pad **218**. As will be described in greater detail herein, inserter **200** supports a medical device, such as on body housing **122** (not shown) and a sharp **224**. In some embodiments, on body housing **122**, includes an analyte sensor **14**. During insertion, sharp **224** passes through aperture **220** and into the skin of the subject carrying at least the sensor **14** with it.

FIG. **7** illustrates inserter **200** in cross-section, in an initial configuration prior to use, after removal of the distal cap **204**. Actuator **214** may be cylindrical in shape (or other shape as appropriate) and, including an upper contact surface **226**, capable of being depressed by a user and/or a mechanism, as described herein. Actuator **214** may further include side walls **228** extending downwardly from upper surface **226**, and which engage or otherwise contact the upper surface of carriage **230**. Carriage **230** provides a support for holding the medical device, such as on body housing **122**, prior to and during installation. In some embodiments, carriage **230** includes a distal portion **232**, which may be configured to form a substantially concave recess **232***a* as shown in this embodiment, for supporting the medical device therein. In some embodiments, the on body housing **122** is supported within the recess **232***a* of carriage **230** in a snap-fit or other relationship. In some embodiments, carriage **230** does not include a recess. In such embodiments, carriage may include one or more projections which contact and/or advance the on body housing **122**. (See, e.g., FIGS. **122**, **135-136** herein.)

In FIG. **8** the longitudinal axis L of the inserter **200** is illustrated. Extending distally from the upper surface **226** of actuator **214** and substantially parallel to the longitudinal axis is a support member **234**, which may have an elongated configuration. Support member **234** supports needle hub **236**, from which sharp **224** extends longitudinally within the inserter **200**. In some embodiments, the sharp **224** is supported at an oblique angle, e.g., between about 0° and 90° with respect to the skin surface. Needle hub **236** can be secured to support member **234** via an interlocking O-ring configuration, adhesive, or other techniques known in the art. Support member **234** can be omitted and needle hub **236** can be secured to the actuator **214** directly in some embodiments, e.g., by manufacturing needle hub **236** as a single component with actuator **214** or by otherwise adhering needle hub **236** to actuator **214**.

In some embodiments, sharp **224** is a solid needle, for example, if inserter **200** is used to insert a cannula. In some embodiments, sharp **224** is provided with a substantially cylindrical configuration defining an interior bore, e.g., a rigid cylindrical member or a hypodermic-style needle. Sharp **224** may also be provided with an elongated longitudinal opening or gap in the wall of the sharp **224** (see, sharp **224** in FIGS. **11-18**). In some embodiments, sharp **224** is fabricated from a sheet of metal, and folded into a substantially "V" or "U" or "C" configuration in cross-section to define the longitudinal recess.

Needle hub **236** is further illustrated in FIGS. **9-10**. Needle hub **236** supports sharp **224**, having a sharpened distal portion **260**. In some embodiments, as discussed herein, a longitudinal wall opening or gap **262** is provided in at least a portion of the wall of the sharp **224**. The length N of the gap **262** is selected to be commensurate with the length of the insertion portion **30** through to the proximal retention portion **48** of the sensor **14** where the bend at line B occurs (See FIGS. **2-3**), and in certain embodiments may be about 3 mm to about 50 mm, e.g., about 5 mm, or about 10 mm, or about 15 mm, or about 20 mm. The length L of the sharp **224** may be about 3 mm to about 50 mm, e.g., 5 mm or more, or about 10 mm, or about 20 mm, or about 30 mm, or about 50 mm, and is selected based upon the length of the insertion portion **30** of a sensor and the desired depth of the insertion portion **30** of the sensor **14**. In some embodiments, the distance or spacing between the two edges of the gap is about 0.2 mm to about 0.5 mm, e.g., about 0.22 mm, about 0.25 mm, etc. (See, spacing **257** in FIG. **11**).

The distal portion **260** of sharp **224** is illustrated in greater detail in FIGS. **11-13**. As illustrated in FIG. **11**, sharp **224** has a substantially "C"- or "U"-shaped profile in this embodiment, but may have other configurations, e.g., substantially "V"-shaped. A longitudinal gap **262** is provided in the wall of the sharp **224**. FIG. **12** illustrates distal portion **260** is provided with an angled tip. In some embodiments, the angled tip may be provided with a first angled tip portion **264** and a second steep-angled tip portion **266**. The exemplary configuration, which includes multiple edges and faces, provides a sharp point to reduce penetration force, trauma, and bleeding for the subject. The distal section of the sensor body has a width sized to fit within the gap **262** of the insertion sharp **224** having a diameter less than about 20 to about 26 gauge, e.g., 21 gauge to about 25 gauge, where in certain embodiments the sharp is 21 gauge or 23 gauge or 25 gauge. Such sharp may be used with a sensor having a width or diameter—at least the portion that is carried by the sharp—of about 0.20 mm to about 0.80 mm, e.g., about 0.25 mm to about 0.60 mm, where in some embodiments the width or diameter of at least a portion of a sensor is 0.27 mm or 0.33 mm or 0.58 mm. In some embodiments, sharp **224** is fabricated from a sheet of metal and folded into a substantially "V" or "U" or "C" configuration in cross-section.

Various technologies can be used to manufacture a folded sheet of metal to form sharp **224**. For example, etched-sheet metal technology can be used to form the sharp **224**. In this manner, the sharp can be formed having a very sharp edge so that penetration through the skin during insertion is less painful. In other embodiments, a progressive die technology may be utilized to form a complex sheet-metal shape that has a sharp edge as depicted in FIG. **14**. In some embodiments, the sharp **224** can be molded with a plastic cap so that the sharp can be handled during the inserter assembly process. Further, the die cut sharp may be molded with plastic to reinforce the "V," "U," or "C" shaped sheet metal configuration. In some embodiments, a "U" shaped cross-section can be provided with having flat, rather than curved walls. The "U" shaped configuration provides the advantage that they can more securely and closely hold the sensor. Also, the "U" shaped configuration provides the advantage that it has a reduced cross-section when compared with a comparable circular cross section. Further details of the tip of sharp **224** are illustrated in FIGS. **14**A-C. As illustrated in FIGS. **14**A-B, a top view of the sharp **224** is shown. This represents a flat portion of the sharp, e.g., the bottom of the "U" configuration. A tip is formed by first distal edges **263** closest to the distal tip and second distal edges **265** between the first distal edges **263** and the substantially parallel side walls **269**. In some embodiments, the first distal edges **263** form an "included tip" angle of about 15 degrees, about 30 degrees, or about 60 degrees. Such angle is symmetrical, that is, equal angles from the longitudinal axis of the sharp **224**. The second distal edges **265** provide a somewhat less acute angle than the first distal edges **263**. In some embodiments, the "lead in" angle may be about 20 degrees, about 45 degrees, or about 65 degrees. By having a tip defined by two angles, a first, smaller "included angle" and a second, larger "lead in angle," allows the tip to meet several objectives. First, the small included angle allows the tip to pierce the skin with less trauma. Second, by broadening out to a larger angle, the overall length of the tip is reduced, and strength of the tip is increased. FIG. **14**C illustrates a side view of the sharp **224** and illustrates the side walls **269**. An additional angle, i.e., the "lead-out" angle is provided by the rising edge **267** of the sharp. The edge **267** provides the ability to

separate the tissue to allow placement of the sensor **14**. In other embodiments, a laser-cut sharp can be formed. In this manner, the laser can be used to form the wall opening or gap **262** and first-angled tip portion **264** and a second, steep-angled tip portion **266**.

In another embodiment, sharp **224** may be formed from a standard hypodermic needle utilizing the method depicted in FIG. **15**. First, the hypodermic needle (having a circular cross-section) is cut to the desired length for sharp **224**. Next, the hypodermic needle is compressed so that its cross-section is permanently deformed from a circular shape to an oval shape. The tip of the hypodermic needle is then ground to a bevel to produce a sharp point to reduce the required penetration force, as previously discussed. Finally, the top section of the needle is removed by appropriate techniques (e.g., grinding, electropolish, etc.). The resulting sharp **224** has a "U"-shaped configuration and provides ample space for the insertion of sensor **14**. In some embodiments, the tip-grinding step and the compression step may be carried out in reversed order.

Due to the compression step, a user may initially start with a larger diameter hypodermic needle so that the finished sharp **224** will have similar dimensions to the previously described sharps.

FIGS. **16-18** illustrate the position of on body housing **122** with respect to the needle hub **236** and sharp **224**. The on body housing **122** can be configured to hold at least a portion of sensor **14** and on body electronics **1100** (also referred to herein as electronics **80**). As illustrated in FIG. **16**, the sharp **224** extends through an aperture **168** in the on body housing **122**. Thus, in some embodiments, the sharp **224** is uncoupled to on body housing **122**. The distal portion of sensor **14** is positioned within the sharp **224**. As further illustrated in FIG. **17**, on body electronics **1100** and sensor hub **123** are positioned within on body housing **122**. Sensor **14** may include an optional positioning structure, or slit **127**, which receives a positioning member, such as tab **129** of sensor hub **123**. A power supply **82**, such as a battery, e.g., a single use disposable battery, or rechargeable battery, is optionally provided.

FIG. **17**A illustrates a detail of sensor hub **123**, which includes an aperture **190** through which sharp **224** and sensor **14** are configured to pass through. In some embodiments, aperture **190** is provided with an additional side channel **192** continuous with the aperture **190**. Side channel **192** is positioned in the location in which the pointed tip **260** of the sharp **224** would first pass through the aperture. Ideally, the tip **260** passes through the aperture without contacting the sensor hub **123**. However, if there is any misalignment, the tip **260** makes contact with the sensor hub **123** and may be damaged and/or it may become jammed or otherwise unable to pass through the aperture. The side channel **192** provides additional clearance for the tip **260** to pass through the aperture undamaged.

FIG. **18** illustrates in cross-section the orientation of the on body housing **122** with respect to the sharp **224** of inserter **200**. As discussed herein, sensor **14** is disposed in a substantially bent configuration in some embodiments, such that a portion of the sensor, e.g., the insertion portion **30** and the proximal retention portion **48**, are substantially vertical (e.g., substantially aligned with the longitudinal axis of the inserter **200** and substantially perpendicular to the skin surface) and the contact portion **32** (shown in profile) is oriented in a substantially horizontal configuration, and in electrical contact with on body electronics **1100**. The sensor tab **50** can be encapsulated in the plastic of the on body housing **122** and secured in place. The notch **56** provides further stability to the sensor **14**, e.g., by allowing the sensor tab **50** to be encased by the material of the on body housing **122**, and further provides a means for vertically orienting the sensor **14** during mounting, e.g., by allowing vertical positioning of the notch **56** with respect the on body housing **122**.

The sensor **14**, mounted with the on body housing **122**, can be disposed within a recess of the carriage **230** such as a concave recess in the carriage **230**. Alternatively, the sensor **14**, mounted with the on body housing **122** can be disposed between the support structure and one or more projections extending from the wall of the sheath **242** (not shown). In yet another alternative, the sensor **14** mounted with the on body housing **122** can be held in position by a releasable friction fit coupling to the sharp **224**. In this manner, the carriage need not have a recess within which the sensor mounted with the on body housing is disposed. In the initial configuration of the inserter **200** (see, e.g., FIG. **7**) the sharp **224** extends through a longitudinal aperture **168** formed in a carriage **230**. In some embodiments, the aperture **168** is appropriately sized, such that neither the sharp **224** nor needle hub **236** is in contact with the carriage **230**. Accordingly, the needle hub **236** (and sharp **224**) on the one hand, and the carriage **230** and the on body housing **122**, on the other hand, move simultaneously but independently from one another. In other embodiments, a friction fit may be provided between the aperture and the sharp.

The insertion portion **30** and proximal retention portion **48** of the sensor **14** are disposed within a longitudinal bore **162** within the sharp **224** (See, e.g., FIG. **7**). The proximal retention portion **48** is disposed within the longitudinal bore of the sharp **224** and provides additional stability to the mounting of the sensor **14** within the sharp **224**. The longitudinal wall gap or opening **262** of sharp **224** is aligned with the sensor **14**, such that the tab **50** and the contact portion **32** extend laterally outward from the sharp **224**.

In some embodiments, a resilient member **70** may be included to provide frictional contact with the sharp **224** and/or the sensor **14**. Such frictional contact provides additional stability between the on body housing **122** and sharp **224**, as depicted in FIGS. **19-21**. In some embodiments, resilient member **70** may be formed as a spherical, ovoid, cylindrical, cube-shaped member, etc. Resilient member **70** may be formed from any elastomeric material, e.g., molded plastic components, rubber, nitrile, viton, urethane, etc.

In some embodiments, resilient member **70** is press-fit into a recess, such as an eccentric bore **72** located in on body housing **122** (FIG. **21**). When sharp **224** is inserted within an aperture in the on body housing **122**, the resilient member **70** exerts a pressure on sharp **224** and sensor **14** to hold them firmly in groove **74**. In some embodiments, groove **74** is a V-shape. Alternatively, groove **74** may be U-shaped depending on the configuration of sensor **14** and sharp **224**. In some embodiments, resilient member **70** is provided with a flattened or recessed surface which abuts sharp **224**.

The sensor **14**, mounted with the on body housing **122**, is carried by the carriage, e.g., disposed within the concave recess **232***a* in the carriage **230**, as described hereinabove (see, e.g., FIGS. **16-21**). In the initial configuration of the inserter **200** (see, e.g., FIG. **7**), the sharp **224** extends through a longitudinal aperture formed in the carriage **230**. In some embodiments, the aperture is appropriately sized, such that neither the sharp **224** nor needle hub **236** is in contact with the carriage **230**. In other words, in some embodiments a clearance may be provided between the surfaces of the carriage and the sharp and needle hub. In some cases, sharp **224** is capable of substantial lateral

movement or "play" with respect to aperture. Accordingly, the needle hub **236** (and sharp **224**) on the one hand, and the carriage **230** and the on body housing **122**, on the other hand, can move simultaneously but independently from one another.

Referring back to FIG. **17**, the insertion portion **30** and proximal retention portion **48** of the sensor **14** are disposed within a longitudinal bore of the sharp **224**. The proximal retention portion **48** is disposed within the longitudinal bore **225** of the sharp **224** and provides additional stability to the disposition of the sensor **14** within longitudinal bore **225** of the sharp **224**. The longitudinal wall gap of sharp **224** is aligned with the sensor **14**, such that the tab **50** and the contact portion **32** extend laterally outward from the sharp **224**.

With continued reference to FIG. **7**, an optional sheath **242** is positioned within housing **202**, having an annular configuration and including a circumferential recess **244** in which a retraction spring **246** is positioned. The distal portion of spring **246** contacts a spring retention portion **248** in sheath **242**. The proximal portion of spring **246** contacts one or more tabs **250** extending laterally outwardly from actuator **214**. In the initial configuration, the spring **246** may be in a semi-compressed state, i.e., not fully compressed, nor fully extended. It is understood that sheath **242** may be omitted from inserter **200**, and a recess, such as recess **244**, provided within housing **202**. Similarly, recess **244** may be omitted entirely, and spring **246** or other actuator may be disposed between stops in housing **202**.

Depression of the actuator **214** causes distal longitudinal movement of the carriage **230** and sharp **224**, from a proximal position (spaced apart from the skin of the subject) to a distal position (closer to the skin of the subject). During such downward, distal movement, spring **246** is further compressed between spring retention portion **248** and flanges **270**.

As illustrated in FIG. **8**, depression of the contact surface **226** moves the actuator side walls **228** and the tabs **250** downwardly distally against the bias of spring **246**. Contact of the side wall **228** of the actuator **214** with the upper surface of the carriage **230** during depression of the actuator **214** imposes a downward force and consequential distal movement of the carriage **230**. As the sharp **224** is urged distally, it carries the sensor insertion portion **30** into the subcutaneous portion of the subject's skin S.

As illustrated in FIG. **7**, flanges **270** are disposed in the inner wall of sheath **242**. When carriage **230** reaches a distal position, as shown in FIG. **8**, the flanges **270** engage the proximal (upper) surface of the carriage **230**, and thereby inhibit proximal movement of the carriage **230** (see also FIG. **24**). The distal (lower) surface of the on body housing **122** engages the upper surface of adhesive pad **218**, thereby becoming adhered to the skin surface S of the subject. As the flanges **270** engage the carriage **230**, the flanges **270** also engage fingers **274** disposed on the proximal face of the carriage **230**. Fingers **274** are pivoted inwards by flanges **270**. Such pivoting of fingers **274** causes fingers **274** to become disengaged from retention tab **250** on actuator **214**. Spring **246** is thereby permitted to decompress and expand, and thereby provide an upward force on actuator **214**. If the user or some apparatus provides no downward force, or minimal downward force to overcome the bias of spring **246**, the actuator **214**, along with needle hub **236** and sharp **224** move proximally, withdrawing the sharp **224** from the skin S of the subject.

As shown in FIGS. **22** and **23**, the actuator **214** and coupled sharp **224** advances to a more proximal position than at the initial configuration illustrated in FIGS. **5** and **7** due to the decoupling of actuator **214** from carrier **30**. Thus, the sharp **224** retracts from a distal position to a proximal position after installation of the on body housing **122** and insertion of at least a portion of the sensor.

A further embodiment of an inserter is illustrated in FIGS. **25-39** and designated inserter **300**. In some embodiments, inserter **300** has a maximum diameter of about 30 mm to about 60 mm, e.g., about 40 mm, about 43 mm, about 43.5 mm, about 50.5 mm, about 54.5 mm, etc. In some embodiments, inserter **300** has a maximum height of about 40 mm to about 80 mm, e.g., about 44 mm, about 46 mm, about 50 mm, about 53 mm, about 67 mm, about 71 mm, etc. Such height is defined by the total length of the housing **302** and the sheath **342**. In some embodiments, inserter **300** has a volume of about 35 cm^3 to about 110 cm^3, e.g., about 40 cm^3, about 41 cm^3, about 50 cm^3, about 60 cm^3, about 61 cm^3, about 62 cm^3, about 69 cm^3, about 70 cm^3, about 79 cm^3, about 90 cm^3, about 106 cm^3, etc. Such dimensions are defined by the total length of the housing **302** and the sheath **342**.

As illustrated in FIGS. **25-26**, inserter **300** in certain embodiments includes, e.g., a handle **302**, a sheath **342**, and a removable distal cap **304** for maintaining a sterile environment for the medical device and sharp housed therein. FIG. **26** illustrates that distal cap **304** is removed from handle **302**. Distal cap **304** is secured to handle **302** by one of a number of securement means, e.g., by use of threads **310**. Sheath **342** defines a distal surface **312** for placement on the skin of a subject. Inserter **300** may be utilized to advance a medical device into the skin of the subject. In some embodiments, handle **302** is advanced relative to sheath **342** in order to advance the medical device into the skin of the patient.

The components of inserter **300** in certain embodiments are illustrated in FIGS. **27-32**. As illustrated in FIG. **27**, handle **302** may include threads **310** for attachment of cap **304** via threads **311** (as illustrated in FIG. **29**). It is understood that other securement techniques, such as a snap-fit or friction-fit may be used to secure cap **304**. Cap **304** may include a receptacle **325** for positioning of the sharp **324**. Sheath **342**, as illustrated in FIG. **28**, includes longitudinal notches **382**.

Projections **386** on carriage **330**, as illustrated in FIG. **30**, are configured to engage sheath to secure carriage **330** within the inserter **300**, thereby preventing release of the carriage **330** from the inserter **300**. When the projections **386** of carrier reach the bottom of the notches **382**, such bottom surface acts as the retention portion that prevents the carriage **330** from falling out of the inserter **300**. Projections **375** engage with the triangular latch features **370** of the sheath **342** as illustrated in FIGS. **34** and **36**.

Carriage **330** also is provided with fingers **375** which engage a shoulder wall **376** of sharp **324** (as illustrated in FIG. **34**), as will be described in greater detail herein.

In certain embodiments, inserter **300** also includes a spring retention component **348**, as illustrated in FIG. **31**. Spring retention component **348** defines an upper surface **349**, which engages spring **346** (as illustrated in FIG. **34**). Spring retention component **348** also includes locking towers **351** including projections, which engage apertures **328** of needle carrier **334** to prevent accidental deployment of the sharp **324** after use of the inserter **300** is completed.

Inserter **300** is illustrated in cross-section in FIG. **33** prior to use. Cap **304** is attached to the distal portion of inserter **300**, via securement means, such as inter-engagement of threads **310** and **311**. Cap **304** includes a desiccant tablet

390; a seal, such as a foil seal 392; and a Tyvek® layer 394, which allows breathability between the desiccant tablet 390 and the interior of the inserter 300.

As illustrated in FIG. 34, the inserter 300 includes an initial configuration in which the handle 302 is disposed in a proximal position with respect to the sheath 342. In such configuration, the sharp 324 is disposed in a configuration spaced apart from the aperture 320 of the adhesive layer 318. The distal portion of inserter 300 is illustrated in FIG. 35.

With continued reference to FIG. 34, the longitudinal axis L of the inserter 300 is illustrated. Extending distally from the upper surface of handle 302 is an inner wall portion 326 and intermediate wall portion 374. Support member 334 extends from wall portion 326 and supports needle hub 336, from which sharp 324 extends longitudinally within the inserter 300. In some embodiments, the sharp is supported at an oblique angle, e.g., between 0° and 90° with respect to the skin surface.

Sheath 342 is positioned within handle 302, having an annular configuration in which a retraction spring 346 is positioned. The distal portion of spring 346 contacts a surface 349 of spring retention component 348. The proximal portion of spring 346 contacts the inner surface 350 of handle 302. In the initial configuration, the spring 346 is in an extended or semi-extended configuration.

FIG. 36 illustrates inserter 300 in cross-section, during insertion. Depression of handle 302 with respect to sheath 342 against the bias of spring 346 causes distal longitudinal movement of the carriage 330 and sharp 324, from a proximal position towards a distal position. During such downward, distal movement, spring 346 is compressed between surface 349 of spring retention component 348 and surface 350 of handle 302. As the sharp 324 is urged distally by housing 302, it carries the sensor insertion portion 30 of sensor 14 into the subject's skin S.

As carriage 330 reaches a distal position, the distal surface of the on body housing 122 engages the upper surface of adhesive pad 318, thereby becoming adhered to the skin surface S of the subject. Also, flange 370 engages fingers 375 disposed on the carriage 330. Fingers 375 are pivoted outwards by flanges 370 in direction T. Such pivoting of fingers 375 causes fingers 375 to become disengaged from slots 376 in intermediate housing walls 374. Carriage 330 is thereby disengaged from handle 302 and needle carrier 334.

As illustrated in FIG. 37, handle 302, along with needle hub 336 and sharp 324 are permitted to move proximally, while the sheath 342 and on body housing 122 remain adjacent to the skin of the subject. If the user or some apparatus provides no downward force, or minimal downward force to the handle 302 to overcome the bias of spring 346, spring 346 is permitted to expand, thereby withdrawing the sharp 324 from the skin S of the subject.

Upon reaching the proximal position, flanges 328 on needle carrier 334 engage locking towers 351 of needle floor component 348. The inter-engagement of flanges 328 and locking towers 351 prevents inadvertent deployment of sharp 324 after installation of the medical device.

A further embodiment of an inserter is illustrated in FIGS. 40-50, and designated inserter 400. In some embodiments, inserter 400 has a maximum diameter of about 30 mm to about 60 mm, e.g., about 40 mm, about 43 mm, about 43.5 mm, about 50.5 mm, about 54.5 mm, etc. In some embodiments, inserter 400 has a maximum height of about 40 mm to about 80 mm, e.g., about 44 mm, about 46 mm, about 50 mm, about 53 mm, about 67 mm, about 71 mm, etc. In some embodiments, inserter 400 has a volume of about 35 cm^3 to about 110 cm^3, e.g., about 40 cm^3, about 41 cm^3, about 50 cm^3, about 60 cm^3, about 61 cm^3, about 62 cm^3, about 69 cm^3, about 70 cm^3, about 79 cm^3, about 90 cm^3, about 106 cm^3, etc. The maximum height is measured from the top of the housing 402 to the distal surface 412. The volume is measured as the combined volume of the housing 402 and the sheath 442 in an expanded position.

Inserter 400 generally includes, e.g., a handle 402, sheath 442, and a removable distal cap 404 for maintaining a sterile environment for the medical device and sharp housed therein. As illustrated in FIG. 41, distal cap 404 is shown removed from handle 402. Distal cap 404 is detachably secured to handle 402, e.g., by use of threads 410. Sheath 442 includes a distal surface 412 for placement on the skin of a subject. Inserter 400 may be utilized to advance a medical device into the skin of the subject. In some embodiments, handle 402 is advanced relative to sheath 442 in order to advance the medical device distally and into the skin of the patient.

The components of inserter 400 are illustrated in FIGS. 42-46. As illustrated in FIG. 42, handle 402 includes threads 410 for attachment of cap 404 via threads 411 (as illustrated in FIG. 44). Cap 404 may include a receptacle 425 for positioning of the sharp 424. Sheath 442, as illustrated in FIG. 43, includes longitudinal notches 482. Projections 486 on carriage 430, as illustrated in FIG. 45, are configured to engage sheath 442 to secure carriage 430 within inserter 400, thereby preventing release of the carriage from the inserter. Sheath 442 also includes notches 484 which receive projection 475 of carriage 430. The bottom of the notches acts as the retention portion that prevents the carriage 430 from falling out of the inserter 400. Projections 475 engage with the latch features 470 of the sheath 442 as illustrated in FIGS. 49 and 50. Carriage 430 also is provided with fingers 474 which engage a shoulder wall 476 of needle carrier 436, as illustrated in FIGS. 48-49, and as will be described in greater detail herein.

Sheath 442 also includes a spring retention portion 448, provided at the distal end of circumferential notch 496, as illustrated in FIG. 48. Needle carrier 434, as illustrated in FIG. 46, includes wings 450, which provide an upper engagement surface for spring 446. Wings 450 also include a shoulder 476 for engagement with fingers 474 of carriage 430.

Inserter 400 is illustrated in cross-section in FIG. 47 in a state prior to use and prior to removal of cap 404, which is shown attached to the distal portion of handle 402, via inter-engagement of threads 410 and 411. Cap 404 includes a desiccant tablet 490, a seal such as a foil seal 492, and a Tyvek® layer 494, which allows breathability between the desiccant tablet 490 and the interior of the inserter 400.

As illustrated in FIG. 48, the inserter 400 is shown in an initial configuration in which handle 402 is disposed in a proximal position with respect to the sheath 442. In such configuration, the sharp 424 is disposed in a configuration spaced apart from the aperture 420 of the adhesive layer 418. The longitudinal axis L of the inserter 400 is illustrated. Extending distally from the upper surface of handle 402 is inner wall 475. The distal end portions of wall 475 provide a downward force on the carriage 430 upon depression of the handle 402 by a user. Alternatively, instead of handle having a distally extending inner wall, the carriage can include one or more upwardly extending walls or projections (not shown). The one or more upwardly extending inner walls or projections can have a length sufficient to either contact the upper surface of 402 or, alternatively, contact corresponding downwardly extending inner walls of the handle 402. In this manner, depression of handle 402 by a user provides a

downward force on the one or more upwardly extending walls or projections of the carriage to advance the carriage (and on-body unit) distally to an installation and insertion position. (See FIGS. **49-50**.) In one embodiment a downwardly extending wall of the handle **402** and a corresponding upwardly extending wall of the carriage are aligned such that depression of the handle **402** by a user allows the upwardly extending wall and the downwardly extending wall to make direct contact, thereby permitting the carriage **430** and on-body unit to advance distally. In such embodiment, the downwardly extending inner wall of the handle has a distal end that is disposed proximally of the proximal most end of sheath **442**.

Needle carrier **434** can be axially moveable within handle **402**. Needle carrier **434** supports needle hub **436**, from which sharp **424** extends longitudinally within inserter **400**. In some embodiments, sharp **424** is supported at an oblique angle, e.g., between and including about 0° and 90° with respect to the skin surface. Initially, needle carrier **434** is coupled to carriage **430** via inter-engagement of fingers **474** of carriage **430** with shoulder **476** of needle carrier **434**. Spring **446** is disposed between spring retention portion **448** of sheath **442** and wings **450** (FIG. **46**) of needle carrier **434**. Initially, spring **446** is in an expanded or semi-expanded state while handle **402** is disposed proximally from sheath **442**. In another exemplary embodiment, needle carrier **434** can be secured to handle **402**, for example, secured to downwardly extending inner wall **475**. In this manner, needle carrier and carriage **430** are longitudinally moveable along the line defined by L shown in FIG. **48** with respect to sheath **442**. In this regard, needle carrier **434** includes one or more apertures to receive one or more downwardly extending inner walls **475** of handle **402**. In some embodiments, neither the needle carrier **434** nor the carriage **430** are in slidable contact with sheath **442**, e.g., spaced apart from sheath **442**, during longitudinal movement of the needle carrier **434** and/or carriage **430**.

FIG. **49** illustrates inserter **400** in cross-section, during insertion. Depression of handle **402** with respect to sheath **442**, against the bias of spring **446**, causes distal longitudinal movement of the carriage **430** and needle carrier **434**, from a proximal position towards a distal position. During such downward proximal movement, spring **446** is compressed between spring retention portion **448** and wings **450** (FIG. **46**) of needle carrier **434**. As the sharp **424** is urged distally, it carries the sensor insertion portion **30** of sensor **14** (FIG. **17**) into the subcutaneous portion of the subject's skin S.

As carriage **430** reaches a distal position (close to the skin of the subject), the distal surface of the on body housing **122** engages the upper surface of adhesive pad **418**, thereby becoming adhered to the skin surface S of the subject. Flange **470** engages fingers **474** disposed on the carriage **430**. Fingers **474** are pivoted outwards by flanges **470** in direction T. Such pivoting of fingers **474** causes fingers **474** to become disengaged from shoulder **476** of needle carrier **434**. Needle carrier **434** is thereby disengaged from carriage **430**. Such pivoting of fingers **474** also engages opening in **474** with flange **470**, thus locking carriage **430** in the distal position.

As illustrated in FIG. **50**, disengagement of the needle carrier **434** from the carriage **430** permits the spring **446** to expand, thereby advancing the needle carrier **434** to a proximal position (away from the skin of the subject) and withdrawing the sharp **424** from under the skin surface S of the subject while leaving the sensor **14** in the skin. Once the sharp **424** has been withdrawn from the subject, it is no longer accessible from the distal portion of the inserter **400** and unable to make contact by accident with the subject's skin because it is positioned at a proximal position within the carrier handle **402**.

An inserter **2400** in accordance with another exemplary embodiment is illustrated in FIG. **51**. In some embodiments, inserter **2400** has a maximum diameter, of about 30 mm to about 60 mm, e.g., about 40 mm, about 43 mm, about 43.5 mm, about 50.5 mm, about 54.5 mm, etc. In some embodiments, inserter **2400** has a maximum height of about 40 mm to about 80 mm, e.g., about 44 mm, about 46 mm, about 50 mm, about 53 mm, about 67 mm, about 71 mm, etc. In some embodiments, inserter **2400** has a volume of about 35 cm^3 to about 110 cm^3, e.g., about 40 cm^3, about 41 cm^3, about 50 cm^3, about 60 cm^3, about 61 cm^3, about 62 cm^3, about 69 cm^3, about 70 cm^3, about 79 cm^3, about 90 cm^3, about 106 cm^3, etc. The height is measured from the distal surface of the housing **2402** (adjacent to adhesive **218**) to the top surface. The volume is measure by the volume of the housing **2402**.

With reference to FIG. **51**, inserter **2400** includes a housing **2402** and a removable distal cap **2412** for protecting the medical device and sharp housed therein. Housing **2402** and distal cap **2412** may be fabricated from any suitable materials such as metal, plastic, etc. In some embodiments, cap **2412** may be fabricated from a polymer or plastic material.

An exploded view of the components of inserter **2400** is illustrated in FIG. **52**. As shown, inserter **2400** generally comprises plunger **2405**, spring **2406**, housing **2402**, sharp **2404** (not shown in FIG. **52**), on body housing **122**, sharp holder **2408**, adhesive patch **218**, and cap **2412** when fully assembled.

A more detailed view of sharp holder **2408** is shown in FIG. **53**. Needle holder **2408** retains sharp **2404** in a fixed position with respect to itself within inserter **2400**, thereby allowing it to safely penetrate a subject's skin during later use.

To assemble inserter **2400**, sharp **2404** and hub **2408** are inserted through an opening in on body housing **122** as shown in FIG. **54**. Needle holder **2408** prevents sharp **2404** from being fully inserted through on body housing **122**. In some embodiments, on body housing **122** includes an analyte sensor **14** and on body electronics **1100**.

Next, plunger **2405**, spring **2406**, and housing **2402** are assembled as shown in FIGS. **55-57**. Plunger **2405** contains a spring retention member which is inserted through the center of spring **2406**. Lip **2414** of plunger **2405** engages inner wall **2416** of housing **2402** when assembled (FIG. **51**). This causes spring **2406** to be contained between lip **2418** of housing member **2402** and the bottom surface **2424** of plunger **2405**. The resulting sub-assembly of inserter **2400** shown in allows plunger **2405** to move between a proximal position, with spring **2406** in a preloaded condition, and a distal position, wherein bottom surface **2424** engages wall **2426** of housing **2402**.

The on body housing assembly shown in FIG. **54** is then inserted into the inserter sub-assembly shown in FIGS. **55-57**. As shown in FIG. **57**, on body housing **122** is inserted into housing **2402** with the tip of sharp **2404** pointing away from plunger **2405**. The resulting assembly is depicted in FIG. **58**. As shown in FIG. **51**, grooves on sharp holder **2408** engage tabs **2422** on plunger **2405**. The on body housing **122** is axially retained in the housing **2402** by the housing arms detent features **2440**.

Finally, adhesive patch **218** is placed over the opening of housing **2402** and cap **2412** is friction fit over housing **2402** as shown in FIG. **59**. The fully assembled inserter **2400** is

depicted in FIG. **60**. In some embodiments, adhesive pad **218** has an adhesive material on both faces. A central aperture **220** may be provided in adhesive pad **218** to allow sharp **2404** to be deployed into the skin of a subject. During insertion, sharp **2404** passes through aperture **220** and into the skin of the subject carrying at least the sensor with it.

FIG. **61** illustrates inserter **2400** in cross-section, in an initial configuration prior to use, after removal of the distal cap **2412**. As shown, sharp **2404** extends longitudinally within the inserter **2400**. In some embodiments, sharp **2404** is supported at an oblique angle, e.g., between and including about 0° and 90° with respect to the skin surface.

In some embodiments, sharp **2404** is provided with a substantially cylindrical configuration defining an interior bore, e.g., a rigid cylindrical member or a hypodermic-style needle. Sharp **2404** may also be provided with an elongated longitudinal opening or gap in the wall of the sharp **2404**. In some embodiments, sharp **2404** is fabricated from a sheet of metal, and folded into a substantially "V" or "U" or "C" configuration in cross-section to define the longitudinal recess.

Depression of plunger **2405** causes distal longitudinal movement of on body housing **122** and sharp **2404**, from a proximal position to a distal position. During such downward, distal movement, spring **246** is further compressed between lip **2418** and bottom surface **2424**. Detent **2440** provides a minimum force threshold to overcome before on body housing **122** can continue on its downward distal movement. Beyond a minimum force threshold, detent **2440** is pushed outward by on body housing **122**, and on body housing **122** then translates onto ramp **2442**. The friction between on body housing **122** and ramp **2442** of the housing hold the on body housing **122** up against plunger **2405**.

As illustrated in FIG. **62**, depression of plunger **2405** advances the inserter **2400** from an initial configuration to a deployed configuration. Contact of plunger **2405** and hub **2408** during depression of plunger **2405** imposes a downward force and consequential distal movement of sharp **2404**. As the sharp **2404** is urged distally, it carries the sensor insertion portion **30** into the subcutaneous portion of the subject's skin S. Contact of plunger **2405** and sensor housing **122** during depression of plunger **2405** imposes a downward force and consequential distal movement of sensor housing **122**. Lip features **2414** of plunger **2405** maintain parallelism of sensor housing **122** to subject skin S during distal movement.

When plunger **2405** reaches a distal position, as shown in FIG. **63**, bottom surface **2424** engages wall **2426** and prevents further downward movement. The distal (lower) surface of on body housing **122** engages the upper surface of adhesive pad **218**, thereby becoming adhered to the skin surface S of the subject.

As the subject or some apparatus removes force from plunger **2405**, spring **2406** urges plunger **2405** toward its proximal position (away from the skin surface) as shown in FIG. **64**, leaving on body housing **122** adhered to the skin surface S of the subject. Tabs **2427** provide additional downward force to the on body housing **122** to assist holding it to adhesive patch **218** while the sharp **2404** is withdrawn through on body housing **122**. Eventually, the upward force exerted by spring **2406** returns inserter **2400** to its initial configuration as illustrated in FIG. **65**.

In some embodiments, inserter **2400** may be distributed in a sterilized package **2480** as depicted in FIG. **66**. To use inserter **2400** in this configuration, a user would first clean the insertion site on the skin with alcohol. The user would then remove inserter **2400** from sterilized package **2480** as shown in FIG. **66**. Next a user would place the inserter on the insertion site and push down on plunger **2405** until on body housing **122** is adhered to the subject's skin as shown in FIGS. **67-68**. The user would then release the plunger **2405**. Finally, the user would remove inserter **2400** from the insertion site and dispose of the inserter.

A further embodiment of an inserter is illustrated in FIGS. **73-87**, and designated inserter **2500**. In some embodiments, inserter **2500** has a maximum diameter of about 30 mm to about 60 mm, e.g., about 40 mm, about 43 mm, about 43.5 mm, about 50.25 mm, about 52 mm, etc. In some embodiments, inserter **2500** has a maximum height of about 40 mm to about 80 mm, e.g., about 44 mm, about 46 mm, about 50.25 mm, about 53 mm, about 67 mm, about 71 mm, etc. In some embodiments, inserter **2500** has a volume of about 35 cm^3 to about 110 cm^3, e.g., about 40 cm^3, about 41 cm^3, about 50 cm^3, about 60 cm^3, about 61 cm^3, about 62 cm^3, about 69 cm^3, about 70 cm^3, about 79 cm^3, about 90 cm^3, about 106 cm^3, etc. The height of the inserter is measured from the top of housing **2502** to the distal surface of the sheath **2512** that is intended to contact the skin of the subject. The volume of the inserter may be measured as the volume of the housing and the portion of the sheath **2512** that may extend from the housing **2502**.

Inserter **2500** generally includes, e.g., a handle **2502**, sheath **2512**, and a removable distal cap **2504** for maintaining a sterile environment for the medical device and sharp housed therein (FIG. **73**). As illustrated in FIGS. **74-75**, handle **2502** is shown removed from distal cap **2504**. Distal cap **2504** is detachably secured to handle **2502**, e.g., by use of threads **2506**. It is understood that cap may be secured using snap-fit or press-fit configuration. Inserter **2500** may be utilized to advance a medical device into the skin of the subject. In some embodiments, handle **2502** is advanced relative to sheath **2512** in order to advance the medical device distally and into the skin of the patient.

Handle **2502** further includes needle carrier guides **2508** which allow the needle carrier **2514** to slidingly move relative to distal cap **2504**. In an alternate embodiment, a detent prevents sheath **2512** from moving towards a "firing position" until a minimum force is applied. Location feature **2510** allows for the proper positioning of carriage **2516** when engaged.

Further components of inserter **2500** are illustrated in FIGS. **76-80**. Sheath **2512**, as illustrated in FIG. **76**, may include longitudinal notches **2518** which snap into detents **2507**. Retention members, such as ribs **2520**, pinch spring arms **2522** located on carriage **2516** to prevent on body housing **122** from falling out of inserter **2500**. Ribs **2520** do not extend to the bottom of sheath **2512**, thus allowing carriage **2516** to release on body housing **122** when it has traveled to the bottom of sheath **2512** during insertion. Interfering structure, such as locking beam **2524**, prevents inserter **2500** from being used again once needle carrier **2514** passes the locking beam (FIG. **87**). Specifically, locking feature **2526** of needle carrier **2514** engages with locking beam **2524** to prevent further use of inserter **2500**.

Needle carrier **2514** is illustrated in greater detail in FIGS. **77-78**. In some embodiments, needle carrier **2514** includes guides, such as rail guides **2528**, which interface with rail guides **2508**, thereby allowing needle carrier **2514** to slidingly move relative to handle **2502**. Notches **2527** are provided in sheath **2512** which has a larger dimension than the wings of needle carrier **2514**, such that the needle carrier **2514** does not contact sheath **2512** during longitudinal movement of needle carrier **2514**. Needle carrier **2514** also comprises detents/notches **2530** which interface with the

upper edge of the spring when inserter **2500** is fully assembled (see FIGS. **81-87**). In some embodiments, needle carrier **2514** comprises an attachment feature **2532** capable of accommodating a custom needle hub or attachment.

Carriage **2516** is illustrated in greater detail in FIGS. **79-80**. As shown, carriage **2516** may comprise latches **2538** which connect it to needle carrier **2514** by locking with latches **2540**. Spring hook **2542** allows for support for retaining on body housing **122** when the inserter has not been fired and allows for release of on body housing **122** when it has been attached to the skin of the user. (See, FIGS. **122**, **125**, **135-140**.)

Inserter **2500** is illustrated in cross-section in FIG. **81** in a state prior to use in which handle **2502** is disposed in a proximal position with respect to the sheath **2512**. In such configuration, the sharp **2550** is disposed in a configuration spaced apart from the aperture **420** of the adhesive layer (not shown). The longitudinal axis L of the inserter **2500** is illustrated. The upper surface of spring **2544** is retained in inserter **2500** by detents/notches **2530** located on needle carrier **2514**. The bottom surface of spring **2544** is retained by spring floor **2545** located on sheath **2512**. Initially, spring **2544** is in an expanded or semi-expanded state while handle **2502** is disposed proximally from sheath **2512**.

Extending distally from the upper surface of handle **2502** is inner wall **2508**. In some embodiments, the distal end portions of wall **2508** provide a downward force on carriage **2516** upon depression of handle **2502** by a user. Alternatively, instead of handle **2502** having a distally extending inner wall **2508**, carriage **2516** can include one or more upwardly extending walls or projections (not shown). The one or more upwardly extending inner walls or projections of the carriage **2516** can have a length sufficient to either contact the inside of the upper surface of handle **2502** or, alternatively, contact corresponding downwardly extending inner walls of handle **2502**. In this manner, depression of handle **2502** by a user provides a downward force on the one or more upwardly extending walls or projections of carriage **2516** to advance carriage **2516** (and on body housing **122**) distally to an installation and insertion position (FIG. **84**). In such embodiment, the downwardly extending inner wall of the handle has a distal end that is disposed proximally of the proximal most end of sheath **2512**.

Sharp **2550** extends longitudinally from needle carrier **2514** within inserter **2500**. In some embodiments, sharp **2550** is supported at an oblique angle, e.g., between about 0° and 90° with respect to the skin surface.

FIG. **82** illustrates inserter **2500** in cross-section after a user applies an initial downward force to button **2502**. Further depression of handle **2502** with respect to sheath **2512**, against the bias of spring **2544**, causes distal longitudinal movement of the carriage **2516** and needle carrier **2514**, from a proximal position towards a distal position as shown in FIG. **83**. During such downward proximal movement, spring **2544** is compressed between detents/notches **2530** and retention tab **2546**. As sharp **2550** is further urged distally, it carries the sensor insertion portion **30** of sensor **14** (FIG. **17**) into the subject's skin S.

As carriage **2516** reaches a distal position (near the subject's skin) as shown in FIG. **83**, the distal surface of the on body housing **122** engages the upper surface of adhesive pad (not shown), thereby becoming adhered to the skin surface S of the subject. Latch **2538** engages the upper surface of retention tab **2546** as shown in FIG. **84**. As a result, the top portion of latch **2538** is pivoted outward in direction T. Such pivoting of latch **2538** causes needle carrier to become disengaged from carriage **2516**.

As illustrated in FIG. **85**, disengagement of the needle carrier **2514** from the carriage **2516** permits spring **2544** to expand, thereby advancing the needle carrier **2514** to a proximal position and withdrawing the sharp **2550** from the skin S of the subject while leaving the on body housing **122** attached to the skin. As the sharp is withdrawn (FIG. **86**), locking feature **2526** advances past locking beam **2524** because of the upward force exerted on needle carrier **2514** by spring **2544**.

Referring now to FIG. **87**, once the sharp **2550** has been withdrawn from the subject, button **2502** cannot be pressed again because any downward movement will be blocked by the interaction of locking beam **2524** and locking feature **2526**.

In some embodiments, inserter **2500** may come in a sterilized package which is capable of a one-time use as shown in FIGS. **88-90**. To use inserter **2500** in this manner, a user would first sterilize the insertion site on the skin with alcohol. The subject would then twist off cap **2504** as shown in FIG. **88**. Next a subject would place the inserter on the sterilized insertion site and push down on inserter **2500** until on body housing **122** is adhered to the subject's skin as shown in FIGS. **89-90**. Finally, the subject would remove inserter **2500** from the insertion site and dispose of the inserter. In this manner, the inserter **2500** itself serves as its own sterilized packaging. This procedure applies also to the other inserters described herein.

A further embodiment of an inserter is illustrated in FIGS. **91-108**, and designated inserter **2700**. In some embodiments, inserter **2700** has a maximum diameter of about 30 mm to about 60 mm, e.g., about 40 mm, about 43 mm, about 43.5 mm, about 46 mm, about 50 mm, etc. In some embodiments, inserter **2700** has a maximum height of about 40 mm to about 80 mm, e.g., about 44 mm, about 46 mm, about 49.5 mm, about 55 mm, about 67 mm, about 71 mm, etc. In some embodiments, inserter **2700** has a volume of about 35 cm^3 to about 110 cm^3, e.g., about 40 cm^3, about 41 cm^3, about 50 cm^3, about 60 cm^3, about 61 cm^3, about 62 cm^3, about 69 cm^3, about 70 cm^3, about 79 cm^3, about 90 cm^3, about 106 cm^3, etc. The maximum height refers to the height defined from the top of the housing **2702** to the portion of the sheath **2708** that contacts the subject's skin. The volume is measured as the volume of the housing **2702** and the portion of the sheath **2708** extending from the housing.

Inserter **2700** generally includes, e.g., a housing **2702** (FIGS. **92-93**), sheath **2708** (FIGS. **94-95**), and a removable distal cap **2704** for maintaining a sterile environment for the medical device and sharp housed therein (FIG. **91**). As illustrated in FIGS. **92-93**, housing **2702** is shown removed from distal cap **2704**. Distal cap **2704** is detachably secured to housing **2702**, e.g., by use of threads **2706**. It is understood that cap may be secured using snap-fit or press-fit configuration. Inserter **2700** may be utilized to advance a medical device into the skin of the subject. Sheath **2708** generally defines a cavity or open space, within which sharp carrier **2716** and medical device carrier **2730** are moveable. In some embodiments, housing **2702** is advanced relative to sheath **2708** in order to advance the medical device distally and into the skin of the patient.

Housing **2702** includes sheath guide rail **2710** which interfaces with rail guides **2712** located on sheath **2708** (FIG. **94**), thereby allowing housing **2702** to slidingly move longitudinally relative to sheath **2708**. Housing **2702** may further include sharp carrier guide rail **2714** which interfaces with rail guides **2718** located on sharp carrier **2716** (FIG.

97). Sheath **2708**, sharp carrier **2716**, and housing **2702** may alternatively move relative to one another without the use of guide rails.

Ledge **2720** and/or ledge **2722** are provided on an interior portion of housing **2702**. Ledge **2720** engages sheath **2708** to hold sheath **2708** in a pre-use position prior to insertion of the medical device. Ledge **2722** engages sheath **2708** to secure sheath **2708** in a post-use position after insertion of the medical device. Housing **2702** further includes detent **2724** which prevents housing **2702** from moving relative to sheath **2708** until a minimum force has been applied, e.g., distally by user to housing **2702**. The sheath **2708** is secured to the housing **2702** via snap **2726**. Snap **2726** snaps into the housing detent **2724**. (In some embodiments, it is pinched between ledge **2720** and detent **2724**, thus controlling its longitudinal position relative to the housing **2702**). The needle carrier **2716** is located and secured to the medical device carrier **2730** (located via interaction of locating features **2748** and **2750** and secured via interaction of carrier arms **2732** and angled top surface of **2716**). The ledge **2720** is a controlled surface onto which the top of sheath surface **2728** will engage at the end of the insertion stroke to prevent further relative movement in some embodiments.

Further components of inserter **2700** are illustrated in FIGS. **94-99**. Sheath **2708** is a generally cylindrical component. As illustrated in FIGS. **94-95**, sheath **2708** may include attachment snaps **2726** which are biased into detent **2724** of housing **2702** to create a minimum force that must be overcome in order to advance sharp **224** into the subject's skin and install the on body housing **122**. The interaction of the snap **2726** with the detent **2724** and ledge **2720** holds the assembly in a slop/rattle free position. In some embodiments, the force to be overcome can be about 0.5 lbf to about 5 lbf., e.g., about 1 lbf, about 2 lbf, about 3 lbf, about 4 lbf, etc. Support wall **2728** prevents carrier arms **2732** on carrier **2730** from bending outwardly, clear of sharp carrier **2716**. Ribs **2734** pinch carrier arms **2732** on carrier **2730**, thus preventing on body housing **122** from falling out of inserter **2700** when sheath **2708** is in the extended position. Ribs **2734** are not present at the bottom of sheath **2708**, thus allowing room for spring arms **2736** on carrier **2730** to release on body housing **122** when carrier **2730** has traveled to the bottom of sheath **2708**. Slot **2738**, located on sheath **2708**, interfaces with locating feature **2740** on carrier **2730**, thus orienting carrier **2730** to sheath **2708** during assembly. Once force is overcome to allow carrier **2730** to move distally towards the subject's skin, no further force is required to retract the sharp **324** from the subject's skin.

Referring next to FIGS. **96-97**, depicted is sharp carrier **2716** in a perspective and cross-sectional view, respectively. Sharp carrier **2716** contains notches **2724** which allow clearance for the passage of carrier arms **2732** located on medical device carrier **2730**. Guidance walls **2744** securely hold spring **2746** in place (FIG. **100**). Locating features **2748**, e.g., bosses or tabs, align with locating features **2750**, e.g., recesses or apertures, on carrier **2730**. Snap features **2752** secure sharp **224** securely within inserter **2700**. It is contemplated that sharp **224** may be secured to sharp carrier **2716** by other techniques, e.g., friction fit, adhesive, welding, etc.

Medical device carrier **2730** is depicted in more detail in FIGS. **98-99**. As shown, carrier **2730** contains spring locating ring **2754** which receives one end of spring **2746**. In some embodiments, spring **2746** surrounds spring locating ring **2754**. In some embodiments, the inner area remains clear to leave room for the deflection of sharp carrier feature snaps **2752** that move outwardly when the sharp is inserted. Carrier **2730** further comprises locating features **2756** which interface with locating features on housing **2702**. (See FIGS. **135-136**).

Inserter **2700** is illustrated in cross-section in FIG. **100** in a state prior to use in which housing **2702** is disposed in a proximal position with respect to the sheath **2708**. In such orientation, sharp **224** is disposed in a configuration spaced apart from the aperture **420** of the adhesive layer **118**. The upper surface of spring **2746** is retained in inserter **2700** by sharp carrier **2716**. The bottom surface of spring **2746** is retained by spring location ring **2754**. Initially, spring **2746** is in a compressed or semi-compressed state while housing **2702** is disposed proximally from sheath **2708**.

Sharp **224** extends longitudinally from sharp carrier **2716** within inserter **2700**. In some embodiments, sharp **224** is supported at an oblique angle, e.g., between and including about 0° and 90° with respect to the skin surface.

FIG. **101** illustrates inserter **2700** in cross-section after a user applies an initial downward force to housing **2702**. In some embodiments, a predetermined minimum force must be used so that attachment snaps **2726** advance past detent **2724**.

After detent **2724** has been overcome, e.g., snap **2726** is radially displaced, further depression of housing **2702** with respect to sheath **2708** causes distal longitudinal movement of the carrier **2730** and sharp carrier **2716**, from a proximal position towards a distal position as shown in FIG. **103**. As sharp **224** is further urged distally, it carries the sensor insertion portion **30** of sensor **14** (FIG. **17**) into the subcutaneous portion of the subject's skin S.

As carrier **2716** reaches a distal position (FIG. **103**), the distal surface of the on body housing **122** engages the upper surface of adhesive pad **2718**, thereby becoming adhered to the skin surface S of the subject. Concurrently, carrier arms **2732** are advanced distally and clear the support wall **2728**. This allows carrier arms **2732** to deflect radially outwardly. (See, FIG. **104**). When carrier arms **2732** deflect radially outwardly, shoulder portions of carrier arms **2732** are no longer in an interference relationship with the sharp carrier **2716**. Thus spring **2746** is permitted to expand as shown in FIG. **105**, thereby advancing the sharp carrier **2716** to a proximal position and withdrawing the sharp **224** from the skin S of the subject while leaving the on body housing **122** attached to the skin. Handle **2702** is maintained in the distal position. Sheath snap **2726** of the sheath **2708** have now moved up to lock over feature **2722** of the housing **2702**. Now the housing **2702** and the sheath **2708** can no longer move longitudinally with respect to each other, and provides an indication to a user that the inserter has been used. In FIG. **106**, the medical device carrier **2730** acts as a needle guard to prevent a user for touching the needle.

In some embodiments, the changing interaction of sheath snap **2726** with the housing detent/ledges **2720**, **2724**, and **2722** determine whether the sheath **2708** is locked. When snap **2726** is in the pre-fire position, ledge **2720** prevents sheath **2708** from being pulled out of the housing **2702**. In this position, detent **2724** may also impede the movement of pushing the sheath **2708** into the housing **2702**. When the detent is overcome by at least a minimum force, the sheath **2704** moves longitudinally with respect to the housing **2702** until the snap **2726** snaps over housing ledge **2722**. At this point, ledge **2722** prevents the sheath **2708** from being pulled out of the housing again, but from a new position (this position may be referred to as the used/post-fire position). Sharp carrier snap **2752** function is to hold onto the sharp **224**. In some embodiments, the sharp carrier **2716** is held in the post-fire position relative to the housing **2702** by, e.g., an

interference between the rails of the housing **2714** and the guide rails of the sharp carrier **2718** (this interference is only present once the sharp carrier is fully retracted) and/or by medical device carrier projections interfering with the bottom/floor of the sharp carrier (See, e.g., FIG. **106**). In another embodiment of inserter **2700**, adhesive pad **118** may be attached directly to on body housing **122**. This necessitates a different shape of inserter **2700** as depicted in FIG. **107**. Additionally, carrier **2730** is slightly wider to accommodate adhesive pad **118** attached to on body housing **122** (FIG. **108**).

A further embodiment of an inserter is illustrated in FIGS. **109-134**. In some embodiments, inserter **3700** has a maximum diameter of about 30 mm to about 60 mm, e.g., about 40 mm, about 43 mm, about 43.5 mm, about 46 mm, about 50 mm, etc. In some embodiments, inserter **3700** has a maximum height of about 40 mm to about 80 mm, e.g., about 44 mm, about 46 mm, about 49.5 mm, about 55 mm, about 67 mm, about 71 mm, etc. In some embodiments, inserter **3700** has a volume of about 35 cm^3 to about 110 cm^3, e.g., about 40 cm^3, about 41 cm^3, about 50 cm^3, about 60 cm^3, about 61 cm^3, about 62 cm^3, about 69 cm^3, about 70 cm^3, about 79 cm^3, about 90 cm^3, about 106 cm^3, etc. The maximum height refers to the height defined from the top of the housing **3702** to the portion of the sheath **3708** that contacts the subject's skin. The volume is measured as the volume of the housing **3702** and the portion of the sheath **3708** extending from the housing.

FIGS. **109-112** depict the various stages of insertion from an initial stage in which the cap is attached (FIG. **109**), to removal of the cap (FIG. **110**), deployment of the sharp and on body housing unit (FIG. **111**) and removal of the inserter from the subject's skin (FIG. **112**).

Inserter **3700** generally includes, e.g., a housing **3702** (FIGS. **109**, **113-114**), sheath **3708** (FIGS. **115-116**), and a removable distal cap **3704** (FIGS. **117-119**) for maintaining a sterile environment for the medical device and sharp housed therein. As illustrated in FIGS. **109** and **117-119**, housing **3702** is shown removed from distal cap **3704**. Distal cap **3704** is detachably secured to housing **3702**, e.g., by use of threads **3706**. It is understood that in some embodiments, the cap may be secured using snap-fit or press-fit configuration.

Inserter **3700** may be utilized to advance a medical device into the skin of the subject. Sheath **3708** generally encloses or defines a cavity, within which sharp carrier **3716** (FIGS. **120-121**) and medical device carrier **3730** (FIG. **122**) are moveable. In some embodiments, housing **3702** is advanced relative to sheath **3708** in order to advance the medical device distally and into the skin of the patient.

Housing **3702** includes sheath guide rail **3710** which interfaces with rail guides **3712** located on sheath **3708**, thereby allowing housing **3702** to slidingly move relative to sheath **3708**. Sheath **3708**, sharp carrier **3716**, and housing **3702** may alternatively move relative to one another without the use of guide rails. The housing can include a distally extending sidewall having a non-linear or arcuate shape. In the embodiment illustrated in FIGS. **109-134** the housing is configured with an undulating sidewall which transitions from a concave portion (upper portion of housing **3702**) to a convex portion (lower portion of housing **3702**). (FIG. **114**). This contour enhances the user's tactile recognition and provides a more ergonomic gripping surface which reduces accidental slippage by the user's hand. Further, the housing is configured with a cavity sized to receive the sheath **3708**, as described in further detail below.

Housing ledge **3720** and/or ledge **3722** are provided on an interior portion of housing **3702**. Ledge **3720** engages sheath **3708** to hold sheath **3708** in a pre-use position prior to insertion of the medical device. Ledge **3722** engages sheath **3708** to secure sheath **3708** in a post-use position after insertion of the medical device. Housing **3702** further includes detent **3724** which prevents housing **3702** from moving relative to sheath **3708** until a minimum force has been applied, e.g., distally by user to housing **3702**. The sheath **3708** is secured to the housing **3702** via retention features **3726**, which can be configured, e.g., as a snap. Retention feature **3726** snaps into the housing detent **3724** (In some embodiments, it is pinched between ledge **3720** and detent **3724**, thus controlling its height relative to the housing **3702**). In some embodiments, the surfaces of the housing ledges **3720**, **3722**, **3724** and retention features **3726** are configured to engage in a single point of contact or a plurality of discrete points of contact, e.g., line. Such discrete points of contact are advantageous over conformal surface-to-surface contact in that a more thorough sterilization process can be performed. A variety of sterilization mediums can be employed, e.g., Ethylene Oxide (EtO), wherein the gaseous medium is delivered over the various inserter components. Accordingly, the discrete points of contact allow for a greater surface area of each inserter component to be exposed to the gaseous medium, thereby providing for a more thorough and rapid sterilization process. The housing includes distally extending protrusions **3727** which are received in apertures **3756** of the medical device carrier **3730** to couple the housing and medical device carrier, by such techniques as, e.g., heat staking, ultrasonic bonding, adhesive bonding, snap fit, etc. Coupling the housing and the medical device is performed, in some embodiments, by e.g., heat staking, ultrasonic bonding, adhesive bonding, snap fit, etc. Consequently, there is no relative movement between the housing **3702** and the medical device carrier **3730**.

Sheath **3708** is generally formed as a unitary tubular member having proximal **3708***a* and distal **3708***c* cylindrical portions. In some embodiments, the portions **3708***a* and **3708***c* have an elliptical, square, hexagonal, or other cross-section. As illustrated in FIGS. **115-116**, the distal cylindrical portion **3708***c* (i.e., the lower portion) can be formed with a greater diameter than the proximal portion **3708***a*, with the proximal and distal portions integrally connected via a shelf **3708***b*. Accordingly, the sheath **3708** can be formed as a single-piece and generally cylindrical member with the proximal portion having sufficient rigidity to prevent displacement of the carrier arms **3732**, as described in further detail below. Sheath **3708** can include retention members **3726**, e.g., detent snaps, which are biased into detent **3724** of housing **3702** to create a minimum force that must be overcome in order to advance sharp **324** into the subject's skin and install the on body housing **322**. The retention members **3726** can extend proximally from the shelf **3708***b* of the sheath and be formed as a separate member such that the retention members are spaced or offset from the cylindrical wall of the sheath. The actuation force of the inserter is determined by the stiffness of retention members **3726** (which is a function of length, thickness, and cross section) as well as the steepness of the angle of detent **3724** of the housing. In some embodiments, the force to be overcome can be about 0.5 lbf to about 5 lbf., e.g., about 1 lbf, about 2 lbf, about 3 lbf, about 4 lbf, etc.

As described above, the proximal portion **3708***a* of the sheath is sized such that an interior support wall surface **3728** prevents carrier arms **3732** on medical device carrier

3730 from displacement or bending outwardly, clear of sharp carrier 3716. Maintaining the carrier arms 3732 in a fixed or constrained position within the sheath allows a user to accurately know the relative positioning of the needle within the inserter. Conversely, the distal portion 3708*c* of the sheath is sized such that the diameter of the interior wall surface is greater than the carrier arms 3732, thus allowing room for spring arms 3732 on carrier 3730 to expand or displace radially outward thereby releasing the sharp carrier 3716 to retract to the proximal position. Guide rails 3712 are included on the exterior surface of the proximal portion of the sheath 3708*a*. The guide rails 3712 remain engaged with the housing guide rail 3710 of the housing throughout the insertion operation, i.e., from advancement of the housing from the proximal position to the distal position. Thus even prior to insertion, rotational position of the housing and sheath is controlled, and "rocking" is minimized. In general, rocking is minimized by increasing the length of engagement with respect to the diameter of engagement. In the embodiment disclosed herein, the length of engagement between the sheath and housing, i.e. along the longitudinal axis, is relatively large while the diameter at which the engagement occurs is relatively small, i.e. at proximal portion of sheath 3708*a*. Additionally, sheath 3708 includes a slot 3738 extending distally from the shelf 3708*b* and configured to receive the guide rail 3710 of the housing upon delivery of the medical device and insertion of the sharp into the subject.

Referring next to FIGS. 120-121, depicted is sharp carrier 3716 in a perspective and cross-sectional view, respectively. Sharp carrier 3716 contains notches 3724 which allow clearance for the passage of carrier arms 3732 located on medical device carrier 3730. Guidance walls 3744 securely hold spring 3746 in place (FIGS. 127-128). The top or proximal edge of the sharp carrier includes a chamfered or sloped edge 3725. Locating features 3748, e.g., standoffs or distally extending protrusions, aligned with locating features 3750, e.g., recesses or apertures, on carrier 3730. Accordingly, the sharp carrier 3716 is located and secured to the medical device carrier 3730 (located via interaction of locating features 3748 and 3750 and secured via interaction of carrier arms 3732 and angled edge surface of 3725. These locating features can extend through the medical device carrier 3730 and directly engage the on body housing 322. Accordingly, when a user actuates the inserter, the sharp carrier drives the on body housing 322 and sharp 324 towards the subject via the protrusions 3748. The direct coupling of the sharp carrier enhances the control of the positioning of on body housing 322, and prevents skewing of the on body housing 322 or sharp 324. Additionally, snap features 3752 secure sharp 324 securely within inserter 3700. It is contemplated that sharp 324 may be secured to sharp carrier 3716 by other techniques, e.g., friction fit, adhesive, welding, etc.

Medical device carrier 3730 is depicted in more detail in FIG. 122. As shown, carrier 3730 contains spring locating ring 3754 that receives one end of spring 3746. In some embodiments, spring 3746 surrounds spring locating ring 3754. In some embodiments, the inner area remains clear to leave room for the deflection of sharp carrier feature snaps 3752 that deflect out when the sharp is inserted. As described above, carrier 3730 further comprises locating features 3756 which interface with locating features on housing 3702. Furthermore, detents can be formed at the end of carrier arms 3732 of the medical device carrier to abut or otherwise the sloped edge 3725 of the sharp carrier. As described above, the detents on carrier arms 3732 are configured to engage the edge 3725 of the sharp carrier in a discrete point of contact fashion in order to realize the aforementioned sterilization advantages. Additionally, these surfaces can be configured with rounded surfaces that ensure that there is no surface to "snag" during the release of the sharp carrier. The medical device carrier 3700 further includes one or more housing gripping arms 3762 (e.g., three are depicted in FIG. 122) which hold the on body housing 322 in place. In some embodiments, gripping arms 3762 are provided with engagement boss 3764 which are configured to engage with corresponding recesses 3766 provided on the side walls of the on body housing 322. Such engagement of the recesses 3766 with the gripping arms 3762 maintains the proper height location of the on body housing 322. Ribs 3768 or other projections on the interior surface of the distal portion 3708*c* of the sheath 3708 hold these gripping arms 3762 securely in place against the on body housing 322 while the sheath is fully extended. When the medical device carrier 3730 advances along the sheath 3708 to reach the proximal position during use, the gripping arms 3762 are no longer supported by the sheath 3708 and the force of the adhesive skin patch 318 overcomes the retention force of the gripping arms 3762.

Inserter 3700 is illustrated in cross-section in FIGS. 123-125 in a state prior to use in which housing 3702 is disposed in a proximal position with respect to the sheath 3708 and the cap 3704 secured to the housing. FIG. 126 illustrates a cross-sectional view of the inserter in a state prior to use after the cap 3704 has been removed. The upper surface of spring 3746 is retained in inserter 3700 by sharp carrier 3716. The bottom surface of spring 3746 is retained by spring location ring 3754 of the medical device carrier 3730. Initially, spring 3746 is in a compressed or semi-compressed state while housing 3702 is disposed proximally from sheath 3708.

Sharp 324 extends longitudinally from sharp carrier 3716 within inserter 3700. In some embodiments, sharp 324 is supported at an oblique angle, e.g., between and including about 0° and 90° with respect to the skin surface.

FIGS. 127-128 depict the relationship between the medical device carrier 3730 and the sharp carrier 3716 (with the housing 3702 and sheath 3708 omitted for sake of clarity). FIG. 127 depicts the initial position of the medical device carrier 3730 and the sharp carrier 3716 with the carrier arms 3732 engaged with the sloped edge 3725 of the sharp carrier. In this position there is no relative movement between the medical device carrier 3730 and the sharp carrier 3716. However, the carrier arms 3732 are not of sufficient rigidity or bias to counteract the bias of the spring 3746 in order to maintain the sharp carrier in the position shown in FIG. 127 without support from the sheath, as shown in FIG. 129. Accordingly, the spring 3746 urges the sharp carrier 3716 in the proximal direction thereby displacing the carrier arms 3732 radially outward as shown in FIG. 128.

FIG. 130 illustrates inserter 3700 in cross-section after a user applies an initial downward force to housing 3702. In some embodiments, a predetermined minimum force must be used so that attachment snaps 3726 advance past detent 3724.

After detent 3724 has been overcome, e.g., snap 3726 of the sheath is displaced radially inward, further depression of housing 3702 with respect to sheath 3708 causes distal longitudinal movement of the medical device carrier 3730 and sharp carrier 3716, from a proximal position towards a distal position as shown in FIGS. 131-132. During this phase of insertion, the interior surface of proximal portion 3708*a* of the sheath remains engaged with the carrier arms 3732 to

prevent radial displacement of the arms **3732**, and thus maintains the coupling of the medical device carrier **3730**, on body housing **322**, sharp **324** and sharp carrier **3716**. As sharp **324** is further urged distally, it carries the sensor insertion portion **30** of sensor **14** (FIG. **17**) into the subcutaneous portion of the subject's skin S.

As carrier **3716** reaches a distal position, the on body housing **322** along with the adhesive pad **318** engage the skin surface S of the subject, thereby becoming adhered. Concurrently, carrier arms **3732** are advanced distally beyond shelf **3708***b* of the sheath and clear the support wall **3708***a* (as highlighted by focus point "A" in FIG. **132**). This allows carrier arms **3732** to deflect radially outwardly into the larger diameter distal portion **3708***c* of the sheath as shown in FIG. **133**. When carrier arms **3732** deflect outwardly, shoulder portions of carrier arms **3732** are no longer in an interference relationship with the sharp carrier **3716**. Thus spring **3746** is permitted to expand as shown in FIG. **133**, thereby retracting the sharp carrier **3716** to a proximal position and withdrawing the sharp **324** from the skin S of the subject while leaving the on body housing **322** attached to the skin. Housing (or handle) **3702** is maintained in the distal position and extends over the sheath in a telescoping manner. Sheath detent or snap **3726** of the sheath **3708** can then lock over feature **3722** of the housing **3702**. Accordingly, the housing **3702** and the sheath **3708** can no longer move longitudinally with respect to each other.

In some embodiments, the changing interaction of sheath detent or snap **3726** with the housing detent/ledges **3720**, **3724**, and **3722** determine whether the sheath **3708** is locked. When snap **3726** is in the pre-fire position, ledge **3720** prevents sheath **3708** from being pulled out of the housing **3702**. In this position, detent **3724** may also impede the movement of pushing the sheath **3708** into the housing **3702**. When the detent is overcome by at least a minimum force, the sheath **3708** moves longitudinally with respect to the housing **3702** until the snap **3726** snaps over housing ledge **3722**. At this point, ledge **3722** prevents the sheath **3708** from being pulled out of the housing again, but from a new position (this position may be referred to as the used/post-fire position). Sharp carrier snap **3752** function is to hold onto the sharp/needle. In some embodiments, the sharp/needle carrier **3716** is held in the post-fire position relative to the housing **3702** by, e.g., an interference between the rails of the housing **3710** and the guide rails of the sharp carrier **3718** (this interference is only present once the sharp carrier is fully retracted) and/or by medical device carrier projections **3732** interfering with the bottom/floor of the sharp carrier (See, e.g., FIG. **134**). In another embodiment of inserter **3700**, adhesive pad **318** may be attached to sheath **3708** prior to use. Upon reaching the distal position, the distal surface of on body housing **322** engages the upper surface of adhesive pad **318**, thereby becoming adhered to the skin surface S of the subject.

Another embodiment of the inserter **3700'** is substantially identical to the inserter **3700** discussed hereinabove with the differences noted herein. As illustrated in FIGS. **135-136**, the medical device carrier **3730'** is substantially identical to carrier **3730**. However, carrier **3730'** includes one or more gripping arms **3762'** including an engagement boss **3764'** which is configured to engage with corresponding recesses **3766** provided on the side walls of the on body housing **322**. In some embodiments, the gripping arms **3762'** are configured to be spaced radially apart from the on body housing **322** in the relaxed, unstressed configuration. When an inwardly directed force is applied to the gripping arms **3762'**, they may be directed into contact with the on body housing **322**.

Perspective and sectional views of sheath **3708'** are illustrated, respectively, in FIGS. **137-138**. The inside of distal portion **3708***c*' includes one or more ramp members **3768'**, which are positioned to engage the gripping arms **3762'** and provide a radially inwardly directed force. As illustrated in FIG. **139**, in the initial configuration, the medical device carrier **3730'** is positioned in a proximal position with respect to the sheath **3708'**. In this configuration, the gripping arms **3762'** are deflected radially inwardly by the ramp member **3768'** such that the engagement boss **3764'** is in contact with the recesses **3766** of the on body housing **322**. This configuration provides support for the on body housing **322**. As illustrated in FIG. **140**, as the carrier **3730'** is advanced distally, the gripping arms **3762'** clear the ramp member **3768'**, the gripping arms **3762'** begin to deflect radially outwardly according to their normal bias, thereby releasing the engagement boss **3764'** from the recesses **3768'** of on body housing **322**. Release of the gripping arms **3762'** facilitates the separation of the on body housing **322** form the inserter **3700'**.

In some embodiments, the on body housing is assembled on the body of the user. For example, the on body housing may be comprised of a mounting unit **3780** and an electronics housing **3782**. The mounting unit **3780** may include a mount and a sensor. In some embodiments, the sensor is at least partially positioned within the mount and the distal insertion portion extends out of the mount. An inserter, such as inserter **3700** described herein, is used to advance the distal portion of the sensor into the skin of the subject and to adhere the mount to the skin of the user. Subsequently, the electronics housing **3782** is mounted onto the mounting unit **3780**. Electrical contact is made between the electronics housing **3782** and the sensor in order to transfer the analyte readings from the sensor to the electronics housing **3782**.

As illustrated in FIG. **141**, the inserter **3700** is initially arranged with the cap **3704** attached to the housing **3702**. The mounting unit **3780** is positioned in the medical device carrier **3730**, with the sharp **324** extending distally in a surrounding position about the sensor. FIGS. **142-144** illustrate the sequence of inserting the sensor into the skin of the user and the attachment of the mounting unit **3780** to the skin of the user. In FIG. **142**, the sheath **3708** is placed on the skin. In FIG. **143**, the housing **3702** is advanced distally towards the skin of the user, thereby advancing the medical device carrier, the mounting unit **3780** and the sharp **324** towards the skin of the patient. In FIG. **144**, upon reaching the distal position of the housing **3702**, the sharp carrier **3716** is released, thereby moving to the proximal position.

As illustrated in FIGS. **145***a* and **145***b*, the mounting unit **3780** is positioned on the skin with the distal portion of the sensor inserted into the skin. As illustrated in FIGS. **146***a* and **146***b*, the electronics housing **3782** is inserted into the mounting unit **3780**, and shown in the final configuration in FIGS. **147***a* and **147***b*.

In an exemplary embodiment of on body housing **3800** illustrated in FIG. **148**, electronics housing **3882** is mounted on mounting unit **3880**. Mounting unit **3880** includes a detent **3884** for coupling with a recess **3886** on the electronics housing **3882** in, e.g., a toe-in snap configuration. It is understood that the detent and recess configuration may be reversed such that the recess is on the mounting unit and the detent is on the electronics housing. The electronics housing **3882** electrically couples with the mounting unit **3880** by the electrical contacts **3888** on the mounting unit **3880** which

are coupled to electrical contacts (not shown) on the electronics housing **3882**. The sensor hub **3890** stores at least a portion of the sensor which is electrically coupled to the contacts **3888**.

In another exemplary embodiment illustrated in FIG. **149**, the on body housing **3900** is attached by first attaching the mounting unit **3980** to the skin of the user. Subsequently, sensor **14** is positioned at least partially beneath the skin of the user. Electronics housing **3982** is coupled to the mounting unit **3980** by inserting the flanges **3986** under a corresponding flange of the mounting unit **3980**. Contacts **3988** of the electronics housing **3982** are then coupled to contacts on the sensor **14** in order to provide the sensor readings from the sensor to the electronics housing **3982**.

In some embodiments, the on body housing is assembled on a surface (such as a tabletop) prior to insertion into the user. For example, as illustrated in FIGS. **150-156**, the on body housing may be comprised of a housing unit **4020** and a sensor hub **4022**. The housing unit **4020** may include a mount and on body electronics. In some embodiments, the sensor is at least partially positioned within the sensor hub **4022** and the distal insertion portion extends out of the sensor hub **4022**. The sensor hub **4022** is contained in the inserter, and the housing unit **4020** is positioned in the inserter **3700**. Electrical contact is made between the housing unit **4020** and the sensor in order to transfer the analyte readings from the sensor to the housing unit **4020**. The inserter, similar to inserter **3700** described herein, is used to advance the distal portion of the sensor into the skin of the subject and to adhere the housing unit **4020** to the skin of the user.

As illustrated in FIG. **150**, the inserter **3700** is initially arranged with the cap **3704** attached to the housing **3702**. The sensor hub **4022** is supported by the sharp carrier **3716**, with the sharp **324** extending distally in a surrounding position about the sensor. FIGS. **151-155** illustrate the sequence of inserting the sensor into the skin of the user and the attachment of the housing unit **4020** to the skin of the user. In FIG. **151**, the cap **3704** is removed. In FIGS. **152-153**, the housing unit **4020** is positioned in the housing support **3731**, for example, by use of adhesive patch **4028**. In FIG. **154**, the sharp carrier **3716** is advanced distally, thereby advancing the sensor hub **4022** distally and into engagement with the housing unit **4020**. In FIG. **155**, the sharp carrier **3716** is released, thereby allowing the sharp carrier **3716** to move proximally. The inserter **3700** is removed, leaving the sensor hub **4022** coupled to the housing unit **4020**, as illustrated in FIG. **156**.

In some embodiments, the housing unit **4020** and the adhesive patch **4028** are stored in a sealed compartment **4100** as shown in FIG. **157**. The compartment **4100** includes a lower cap portion **4104** and a cover portion **4102**, manufactured from a flexible material such as metal foil or plastic. As shown in FIG. **158**, the lower cap portion **4104** stores the sterilized housing unit **4020** and adhesive patch **4028** therein until ready for use. In some embodiments, the adhesive patch **4028** includes adhesive on both sides.

In some embodiments, on body housing **4200** includes housing unit **4220** and sensor hub **4222** as illustrated in FIG. **159**. The sensor may be insert molded with mechanical contacts. The PCB in the housing unit **4220** may include leaf spring contacts **4230**. The sensor hub **4222** may be mechanically attached to the housing unit **4220**, e.g., the electrical contacts may function as mechanical snaps. Sealing may be provided by an elastomeric gasket. The housing unit **4220** may be macromelt or injection molded.

In some embodiments, on body housing **4300** includes housing unit **4320** and sensor hub **4322** as illustrated in FIG. **160**. The sensor may have insert molded contacts. The PCB in housing unit **4320** may include exposed pads. Mechanical attachment of the housing unit and sensor hub may be accomplished by molded snaps. The needle guide may be injection molded or overmolded macromelt of TPE (thermoplastic elastomer). The housing unit **4320** may be macromelt or injection molded.

In some embodiments, on body housing **4400** includes housing unit **4420** and sensor hub **4422** as illustrated in FIG. **161**. The sensor may have exposed pads on the flag or contact portion of the sensor. The PCB in housing unit **4420** may include a SMT ZIF connector, or similar **4430**. Mechanical attachment of the housing unit and sensor hub may be accomplished by molded snaps. The needle guide may be injection molded plastic with elastomer overmold. The housing unit **4320** may be macromelt overmold.

In some embodiments, a clamshell type arrangement **4500** is provided which includes a needle guide **4550** having a living hinge arrangement **4552**. The sensor may include bent metal contacts that are inserted after molding. The PCB may include PCB pads. The mechanical attachment is performed by adhesive of mechanical snap to PCB. The transponder housing, not shown, may be injection molded, UV or ultrasonic bonded.

In some embodiments, on body housing **4600** includes housing unit **4620** and sensor hub **4622** as illustrated in FIG. **163**. The sensor **14** may have exposed pads on the flag or contact portion of the sensor. The PCB in housing unit **4620** may include concentric exposed pads **4690**. Mechanical attachment of the housing unit and sensor hub may be accomplished by molded snaps or PSA. The needle guide may be injection molded plastic with elastomer overmold. The housing unit **4620** may be macromelt overmold.

In some embodiments, on body housing **4700** includes housing unit **4720** and sensor hub **4722** as illustrated in FIG. **164**. The sensor may have exposed pads on the flag and may also include a compressed anisotropic zebra, conductive elastomeric or similar. The PCB in housing unit **4720** may include exposed pads. Mechanical attachment of the housing unit and sensor hub may be accomplished by snaps. The needle guide may overmold macromelt or TPE. The housing unit **4720** may be macromelt overmold.

It is understood that the subject matter described herein is not limited to particular embodiments described, as such may, of course, vary. It is also understood that the terminology used herein is for the purpose of describing particular embodiments only, and is not intended to be limiting, since the scope of the present subject matter is limited only by the appended claims.

The invention claimed is:

1. A glucose monitoring assembly, the assembly comprising:

(1) an inserter comprising

a sharp configured to insert a portion of a glucose sensor into a subject; and

(2) an on body electronics unit, comprising:

an on body electronics unit housing comprising a plurality of recesses disposed on a periphery of the on body electronics unit housing, wherein the plurality of recesses comprises a first recess in a spaced relation to a second recess, and wherein the plurality of recesses is detachably engaged with the inserter;

the glucose sensor; and

on body electronics coupled with the glucose sensor, wherein the on body electronics is disposed within

the on body electronics unit housing, and wherein the on body electronics includes a processor, memory, a power supply, and wireless communication circuitry configured to wirelessly communicate data indicative of a glucose level,

wherein the inserter is configured to advance the on body electronics unit and the sharp from a proximal position entirely within the inserter to a distal position, and

wherein the inserter is further configured to retract the sharp from the distal position to a retracted position entirely within the inserter.

2. The glucose monitoring assembly of claim **1**, wherein the inserter further comprises a plurality of gripping arms.

3. The glucose monitoring assembly of claim **2**, wherein each gripping arm of the plurality of gripping arms is configured to be engaged with a corresponding recess of the plurality of recesses of the on body electronics unit housing when the on body electronics unit is in the proximal position, and

wherein the each gripping arm of the plurality of gripping arms is further configured to be disengaged from the corresponding recess of the plurality of recesses when the on body electronics unit is in the distal position.

4. The glucose monitoring assembly of claim **2**, wherein each gripping arm of the plurality of gripping arms is biased in a radially outward direction.

5. The glucose monitoring assembly of claim **2**, wherein the inserter further comprises a plurality of interior surfaces, wherein each interior surface of the plurality of interior surfaces is configured to hold a corresponding gripping arm of the plurality of gripping arms against a corresponding recess of the plurality of recesses of the on body electronics unit housing when the on body electronics unit is in the proximal position.

6. The glucose monitoring assembly of claim **5**, wherein the inserter is further configured such that the each interior surface of the plurality of interior surfaces is not in contact with the corresponding gripping arm of the plurality of gripping arms when the on body electronics unit is in the distal position.

7. The glucose monitoring assembly of claim **6**, wherein the corresponding gripping arm of the plurality of gripping arms is configured to deflect in a radially outward direction when the each interior surface of the plurality of interior surfaces is not in contact with the corresponding gripping arm of the plurality of gripping arms.

8. The glucose monitoring assembly of claim **2**, wherein each gripping arm of the plurality of gripping arms comprises an engagement boss configured to engage with a corresponding recess of the plurality of recesses of the on body electronics unit housing when the on body electronics unit is in the proximal position.

9. The glucose monitoring assembly of claim **8**, wherein the engagement boss is disposed on a tip portion of the gripping arm.

10. The glucose monitoring assembly of claim **8**, wherein the engagement boss comprises a conical shape.

11. The glucose monitoring assembly of claim **1**, wherein each recess of the plurality of recesses comprises a concave portion.

12. The glucose monitoring assembly of claim **1**, wherein each recess of the plurality of recesses is disposed on a side wall of the on body electronics unit housing.

13. The glucose monitoring assembly of claim **1**, wherein the inserter further comprises a driver disposed in the inserter, wherein the driver is configured to apply a force that retracts the sharp after the sharp reaches the distal position.

14. The glucose monitoring assembly of claim **1**, further comprising a cap removably attached to a distal portion of the inserter.

15. The glucose monitoring assembly of claim **1**,

wherein the inserter further comprises an inserter housing and a sheath and wherein the inserter housing is configured to move in a downward direction towards a skin surface relative to the sheath in response to an application of force on the inserter housing, and

wherein the sheath is configured to remain stationary relative to the skin surface in response to the application of force on the inserter housing.

16. The glucose monitoring assembly of claim **1**, wherein the on body electronics unit further comprises a sensor hub,

wherein the glucose sensor comprises a distal sensor portion and a proximal sensor portion,

wherein the distal sensor portion is configured to sense the glucose level of the subject,

wherein the proximal sensor portion is engaged with the sensor hub, and

wherein the distal sensor portion is substantially orthogonal to the proximal sensor portion.

17. The glucose monitoring assembly of claim **1**, wherein the on body electronics comprises an aperture, and wherein the sharp extends through the aperture of the on body electronics.

18. The glucose monitoring assembly of claim **17**, wherein the aperture of the on body electronics is a first aperture, wherein the on body electronics unit housing further comprises a top surface and a bottom surface, wherein the top surface comprises a second aperture, wherein the bottom surface comprises a third aperture, and wherein the sharp extends through the first aperture, the second aperture, and the third aperture when the on body electronics unit is in the proximal position.

19. The glucose monitoring assembly of claim **1**, wherein the inserter further comprises a distal end configured to be placed on a skin surface of the subject before advancement of the on body electronics unit and the sharp.

20. The glucose monitoring assembly of claim **19**, wherein the distal end of the inserter defines a plane, and wherein a bottom surface of the on body electronics unit housing is parallel to the plane when the on body electronics unit and the sharp are in the proximal position.

21. The glucose monitoring assembly of claim **1**, wherein at least a portion of the on body electronics is in a low power state when the on body electronics unit is in the proximal position.

22. The glucose monitoring assembly of claim **1**, further comprising an adhesive portion configured to secure the on body electronics unit housing to a skin surface of the subject.

23. The glucose monitoring assembly of claim **1**, wherein at least a portion of the on body electronics is in a no power state when the on body electronics unit is in the proximal position.

24. The glucose monitoring assembly of claim **1**, wherein at least a portion of the on body electronics is in an inactive mode when the on body electronics unit is in the proximal position.

25. The glucose monitoring assembly of claim **1**, wherein the on body electronics unit and the sharp are configured to advance in a linear direction when advancing from the proximal position within the inserter to the distal position.

26. The glucose monitoring assembly of claim **1**, wherein a distance between the on body electronics unit housing when the on body electronics unit is in the proximal position and the on body electronics unit housing when the on body

electronics unit is in the distal position is greater than a maximum height of the on body electronics unit housing.

27. The glucose monitoring assembly of claim **1**, wherein the sharp is further configured to pierce a skin surface of the subject at an angle substantially perpendicular to the skin surface of the subject.

* * * * *