Doc Code: **TR.PROV**
Document Description: Provisional Cover Sheet (SB16)

PTO/SB/16 (04-07)
Approved for use through 06/30/2010 OMB 0651-0032
U.S. Patent and Trademark Office: U.S. DEPARTMENT OF COMMERCE
Under the Paperwork Reduction Act of 1995, no persons are required to respond to a collection of information unless it displays a valid OMB control number

Provisional Application for Patent Cover Sheet

This is a request for filing a PROVISIONAL APPLICATION FOR PATENT under 37 CFR 1.53(c)

Inventor(s)

Inventor 1 — Remove

Given Name	Middle Name	Family Name	City	State	Country ¡
Manuel		Donnay	Alameda	CA	US

Inventor 2 — Remove

Given Name	Middle Name	Family Name	City	State	Country ¡
Peter	G	Robinson	Alameda	CA	US

All Inventors Must Be Listed – Additional Inventor Information blocks may be generated within this form by selecting the **Add** button. — Add

Title of Invention	MEDICAL DEVICE INSERTERS AND PROCESSES OF INSERTING AND USING MEDICAL DEVICES
Attorney Docket Number (if applicable)	031312-06499

Correspondence Address

Direct all correspondence to (select one):

◉ The address corresponding to Customer Number	◯ Firm or Individual Name
Customer Number	90259

The invention was made by an agency of the United States Government or under a contract with an agency of the United States Government.

◉ No.

◯ Yes, the name of the U.S. Government agency and the Government contract number are:

DEXCOM
EXHIBIT 1008

PTO/SB/16 (04-07)
Approved for use through 06/30/2010 OMB 0651-0032
U.S. Patent and Trademark Office: U.S. DEPARTMENT OF COMMERCE
Under the Paperwork Reduction Act of 1995, no persons are required to respond to a collection of information unless it displays a valid OMB control number

Entity Status

Applicant claims small entity status under 37 CFR 1.27

○ Yes, applicant qualifies for small entity status under 37 CFR 1.27

◉ No

Warning

Petitioner/applicant is cautioned to avoid submitting personal information in documents filed in a patent application that may contribute to identity theft. Personal information such as social security numbers, bank account numbers, or credit card numbers (other than a check or credit card authorization form PTO-2038 submitted for payment purposes) is never required by the USPTO to support a petition or an application. If this type of personal information is included in documents submitted to the USPTO, petitioners/applicants should consider redacting such personal information from the documents before submitting them to USPTO. Petitioner/applicant is advised that the record of a patent application is available to the public after publication of the application (unless a non-publication request in compliance with 37 CFR 1.213(a) is made in the application) or issuance of a patent. Furthermore, the record from an abandoned application may also be available to the public if the application is referenced in a published application or an issued patent (see 37 CFR1.14). Checks and credit card authorization forms PTO-2038 submitted for payment purposes are not retained in the application file and therefore are not publicly available.

Signature

Please see 37 CFR 1.4(d) for the form of the signature.

Signature	/Walter M. Egbert, III/			Date (YYYY-MM-DD)	2010-07-02
First Name	Walter M.	Last Name	Egbert III	Registration Number (If appropriate)	37317

This collection of information is required by 37 CFR 1.51. The information is required to obtain or retain a benefit by the public which is to file (and by the USPTO to process) an application. Confidentiality is governed by 35 U.S.C. 122 and 37 CFR 1.11 and 1.14. This collection is estimated to take 8 hours to complete, including gathering, preparing, and submitting the completed application form to the USPTO. Time will vary depending upon the individual case. Any comments on the amount of time you require to complete this form and/or suggestions for reducing this burden, should be sent to the Chief Information Officer, U.S. Patent and Trademark Office, U.S. Department of Commerce, P.O. Box 1450, Alexandria, VA 22313-1450. DO NOT SEND FEES OR COMPLETED FORMS TO THIS ADDRESS. **This form can only be used when in conjunction with EFS-Web. If this form is mailed to the USPTO, it may cause delays in handling the provisional application.**

MEDICAL DEVICE INSERTERS AND PROCESSES OF INSERTING AND USING MEDICAL DEVICES

BACKGROUND OF THE INVENTION

[0001] Diabetes Mellitus is an incurable chronic disease in which the body does not produce or properly utilize insulin. Insulin is a hormone produced by the pancreas that regulates blood sugar (glucose). In particular, when blood sugar levels rise, *e.g.*, after a meal, insulin lowers the blood sugar levels by facilitating blood glucose to move from the blood into the body cells. Thus, when the pancreas does not produce sufficient insulin (a condition known as Type 1 Diabetes) or does not properly utilize insulin (a condition known as Type 2 Diabetes), the blood glucose remains in the blood, resulting in hyperglycemia or abnormally high blood sugar levels.

[0002] The fluctuations in blood glucose levels in people suffering from diabetes cause long-term, serious complications. Some of these complications include blindness, kidney failure, and nerve damage. Additionally, it is known that diabetes is a factor in accelerating cardiovascular diseases such as atherosclerosis (hardening of the arteries), leading to stroke, coronary heart disease, and other diseases. Accordingly, one important and universal strategy in managing diabetes is to control blood glucose levels.

[0003] One way to manage blood glucose levels is testing and monitoring blood glucose levels by using conventional *in vitro* techniques, such as drawing blood samples, applying the blood to a test strip, and determining the blood glucose level using colorimetric, electrochemical, or photometric test meters. Another more recent technique for monitoring blood glucose levels is by using an *in vivo* glucose-monitoring system, that continuously and/or automatically tests glucose, such as, for example, the FreeStyle Navigator® Continuous Glucose Monitoring

System, manufactured by Abbott Diabetes Care, Inc. Unlike conventional blood glucose meters, continuous analyte-monitoring systems employ a sensor at least a portion of which is positioned in a subject, which detects and monitors blood glucose levels. Prior to each use of a new sensor, the user self-inserts at least a portion of the sensor under his/her skin. An inserter assembly may be employed to insert the sensor in the body of the user. In this manner, an introducer sharp, while engaged to the sensor, pierces an opening into the skin of the user, releases the sensor, and is removed from the body of the user. Accordingly, there exists a need for an easy-to-use, simple, insertion assembly that is reliable, minimizes pain, and is easy to use.

SUMMARY

[0004] Sensors for detecting a physical parameter of a subject are disclosed herein. In some embodiments, a sensor is used to determine a level of analyte, such as, *e.g.*, glucose. Devices are disclosed for inserting a sensor into a subject, *e.g.*, at least partially beneath the skin of a subject. Sensor assemblies that include a medical device, such as a sensor and/or an infusion device, and a device to position at least a portion of the medical device are provided, as well as methods of positioning at least a portion of a medical device such as a sensor (*e.g.*, a glucose sensor) and/or an infusion device, and methods of using a positioned medical device, *e.g.*, methods for analyte testing are disclosed herein.

[0005] Sensor assembly embodiments include a housing adapted to adhere to the skin of a subject; an analyte sensor coupled or coupleable to the housing; and an insertion sharp having a longitudinal body including a longitudinal opening to receive at least a portion of the sensor. In some embodiments, the insertion sharp and analyte sensor may be retained in the sensor housing

using a resilient member, such as a spherical or ball-shaped member, press-fit into the sensor housing.

[0006] In certain embodiments, the sensor includes a body having a proximal section and a distal section, and the distal section may be longitudinally (or otherwise) aligned with the proximal section. Some sensor embodiments may include an intermediate section. An intermediate section, if present, may or may not be laterally displaced from at least the distal member, and a gap may be defined between the laterally displaced intermediate section and a portion of the distal section. A second gap may be defined in the sensor between the proximal section and the laterally displaced intermediate section. The proximal section of the sensor may have a substantially curved profile. A proximal section and a distal section of a given sensor may or may not be in axial alignment with respect to each other.

[0007] In some embodiments, the distal section of the sensor body is received in the longitudinally defined opening of the insertion sharp. A gap may be defined between the distal section and the laterally displaced intermediate section, which allows the distal section, in some embodiments a substantial portion – – including the entirety of the distal section – – to be received in the longitudinal opening of the insertion needle. The intermediate section and the proximal section may be proximate the distal section received in the insertion needle.

[0008] In some embodiments, the proximal section of the sensor may be disposed in a horizontal plane, and the distal section of the sensor body may be disposed in a vertical plane, at least during a sensing operation. In some embodiments, the sensor is configured for insertion in a soft tissue of a user. In some embodiments, the sensor is a glucose sensor.

[0009] Embodiments include sensor assemblies which include a sensor including a portion for operative contact with a fluid of the subject; a housing defining a distal surface adapted for attachment to the skin of a subject and housing a circuit coupled to sensor for performing a function with the sensor. In some embodiments, the sensor is integrated with the circuit within the housing to define an on-body device such as a single-unit on-body device. In some embodiments, a switch is provided at least partially disposed in the housing and having a member defining a first position which protrudes from the distal surface of the mount and a second position which is recessed in the mount, the member configured to activate the circuit when in the second position.

[0010] In some embodiments, the member is biased in the first position. The member may include an elongated member disposed in an opening in the mount. In some embodiments, the member is moved from the first position to the second position when the mount contacts the skin of the subject. In some embodiments, an adhesive layer is disposed on the skin of the subject, and wherein the member is moved from the first position to the second position when the mount contacts the adhesive layer.

[0011] In some embodiments, the switch activates the circuit upon the member reaching the second position. In some embodiments, the switch activates the circuit as long as the member is maintained in the second position. In some embodiments, the sensor is a glucose sensor.

[0012] In some embodiments, the circuit applies a potential to the sensor. In some embodiments, the circuit applies a current to the sensor.

[0013] Embodiments include apparatuses for inserting medical devices at least partially through the skin of a subject. An insertion apparatus may include a sheath defining a distal

surface for placement on the skin of the subject; a device support movable between a proximal and distal position, and adapted to support a medical device; a sharp support movable between a proximal position and a distal position, and adapted to support a sharp extending through a portion of the device support; a handle movable between a proximal position and distal position relative to the sheath and adapted to urge the device support and the sharp support from a proximal to a distal position. In some embodiments, the handle defines guides for slidable engagement with the sharp support and/or the device support. In some embodiments, a driver biases the handle towards the proximal position.

[0014] In some embodiments, the user attaches the inserter to the skin, pressing on the sheath to secure the device adhesively to the skin. The handle is pressed distally urging the device and sharp support into the skin and at the same time energizes the driver element. Once the handle is bottomed out and the medical device placed with respect to the skin, the user releases pressure on the handle. The driver element retracts the device and sharp support, while the device is left coupled to the skin (either mechanically or adhesively). The sharp is retracted from the skin, and the inserter device can be removed.

[0015] In variations of the above embodiment, the driver includes a compression member such as a compression spring. The handle is at least partially disposed within the sheath or is at least partially disposed surrounding the sheath. The sharp support may be permanently fixed to the handle. The device support may be permanently affixed to the handle.

[0016] In some embodiments, a stop portion for retaining the device support in the distal position is included. In some embodiments, the device support is coupled to the sharp support until the device support reaches a distal position.

[0017] In some embodiments, the device support is uncoupled from the sharp support when the device support reaches the distal position. In some embodiments, a retention member is provided to couple the sharp support to the sheath when the sharp support is disposed in the proximal position.

[0018] In some embodiments, the medical device is an analyte sensor. In some embodiments, the medical device is a glucose sensor. In some embodiments, the medical device is an infusion set.

[0019] In certain embodiments, apparatuses for inserting a medical device at least partially through the skin of a subject are provided which include a sheath defining a distal surface for placement on the skin of the subject; a handle movable between a proximal position and distal position; a device support for supporting the medical device and defining an aperture therethrough, the device support coupled to the handle; a sharp support for supporting a sharp extending through said aperture and coupled to the device support; and driver for biasing the sharp support towards the proximal position.

[0020] In some embodiments, the driver includes a compression spring. In some embodiments, the handle is at least partially disposed surrounding the sheath.

[0021] In some embodiments, a stop portion for retaining the device support in the distal position is included. In some embodiments, the device support is coupled to the handle until the device support reaches a distal position. In some embodiments, the device support is uncoupled from the sharp support when the device support reaches the distal position.

[0022] Embodiments of analyte sensors are provided which include a body having a proximal section and a distal section. The distal section may be longitudinally aligned with the proximal section. An intermediate section may be included between the proximal and distal sections, and in some embodiments the intermediate section is laterally displaced from at least the distal member. A gap may be defined between the laterally displaced intermediate section and a portion of the distal section.

[0023] In some embodiments, the proximal end is received within a needle seat to create an anchor region to allow the sensor body to slide into an opening defined in the insertion sharp but prevent the sensor body from inadvertently slipping out of the insertion needle. In some embodiments, a width of the distal section of the sensor body is sized to fit within the opening of the insertion sharp. In certain embodiments, the opening in the sharp has a diameter of about 20 to about 26 gauge, *e.g.*, 21 gauge to about 25 gauge, where in certain embodiments the sharp is 21 gauge or 23 gauge or 25 gauge. Such sharp may be used with a sensor having a width or diameter – – at least the portion that is carried by the sharp – – of about .20 mm to about .80 mm, *e.g.*, about .25 mm to about .60 mm, where in some embodiments the width or diameter of at least a portion of a sensor is .27 mm or .33 mm or .58 mm.

[0024] In some embodiments, the intermediate member includes a plane-altering portion. The plane-altering portion allows the proximal section of the sensor body to be in a plane different than the distal section of the sensor body. In some embodiments, the proximal section and the distal section are in planes substantially perpendicular to each other, *e.g.*, the area may define an angle of about 120° to about 60°, *e.g.*, about 90°.

[0025] In some embodiments, the proximal section has a curved portion.

[0026] In some embodiments, the sensor body includes conductive material disposed in or on a surface thereto to define one or more electrodes. The sensor body may include conductive material defining traces disposed in or on a surface of the sensor body. The traces are in communication with the one or more electrodes. The traces may be disposed in or on at least one surface of the proximal section of the sensor body. The one or more electrodes may be disposed on the distal section of the sensor body. At least one of the traces or electrodes may include a metal or carbon material such as gold, platinum, titanium, and carbon. At least one of the traces or electrodes may be formed by ablation of material. The ablation may include laser ablation. In some embodiments, the sensor is a wire.

[0027] In some embodiments, the sensor includes a sensing layer. The sensing layer may include an enzyme. The sensing layer may include an electron transfer agent. The electron transfer agent may be a redox mediator. In some embodiments, the electron transfer agent includes osmium transition metal complexes and one or more ligands. The electron transfer agent may be configured to transfer electrons directly between the analyte and the working electrode. The electron transfer agent may be configured to transfer electrons indirectly between the analyte and the working electrode.

[0028] In some embodiments, the sensing layer includes a redox polymer. The redox polymer may include osmium. The sensing layer may include a catalyst. The catalyst may include an enzyme. The catalyst may act as an electron transfer agent. In some embodiments, the enzyme includes glucose oxidase. In some embodiments, the enzyme includes glucose dehydrogenase.

[0029] In some embodiments, the sensing layer is configured such that the reaction of glucose in the presence of an enzyme forms hydrogen peroxide, and glucose level may be correlated to the level of hydrogen peroxide. In some embodiments, the sensor is a subcutaneous sensor.

[0030] These and other features, objects, and advantages of the disclosed subject matter will become apparent to those persons skilled in the art upon reading the detailed description as more fully described below.

BRIEF DESCRIPTION OF THE DRAWINGS

[0031] A detailed description of various aspects, features, and embodiments of the subject matter described herein is provided with reference to the accompanying drawings, which are briefly described below. The drawings are illustrative and are not necessarily drawn to scale, with some components and features being exaggerated for clarity. The drawings illustrate various aspects and features of the present subject matter and may illustrate one or more embodiment(s) or example(s) of the present subject matter in whole or in part.

[0032] **FIGURE 1** is a schematic view of the system in accordance with one embodiment of the disclosed subject matter;

[0033] **FIGURE 2** is a view, in partial cross section, of an electrochemical sensor in accordance with one embodiment of the disclosed subject matter;

[0034] **FIGURE 3** is a view, in partial cross-section, of an electrochemical sensor in accordance with another embodiment of the disclosed subject matter;

[0035] **FIGURE 4** is a view of the electrochemical sensor of FIGURE 3 in a folded configuration in accordance with the disclosed subject matter;

[0036] **FIGURE 5A** is a view of an electrochemical sensor in accordance with a further embodiment of the disclosed subject matter;

[0037] **FIGURE 5B** is a view of the electrochemical sensor of FIGURE 5 in a folded configuration in accordance with the disclosed subject matter;

[0038] **FIGURES 6A-6B** are views of an electrochemical sensor in accordance with a further embodiment of the disclosed subject matter;

[0039] **FIGURE 7** is a perspective view of an on-body unit in accordance with one embodiment of the disclosed subject matter;

[0040] **FIGURE 8** is a perspective view in partial cross-section of an on-body unit of FIGURE 7 in accordance with the disclosed subject matter;

[0041] **FIGURE 9** is a schematic view of the system in accordance with one embodiment of the disclosed subject matter;

[0042] **FIGURE 10** is a sectional, perspective view of another embodiment of an inserter in accordance with the disclosed subject matter;

[0043] **FIGURES 11-12** are perspective views of components of the inserter of FIGURE 10 in accordance with the disclosed subject matter;

[0044] **FIGURE 13** is a sectional, perspective view of a component of the inserter of FIGURE 10 in accordance with the disclosed subject matter;

[0045] **FIGURES 14-15** are perspective views of components of the inserter of FIGURE 10 in accordance with the disclosed subject matter;

[0046] **FIGURE 16** is a sectional view of the component of FIGURE 15 in accordance with the disclosed subject matter;

[0047] **FIGURES 17-18** are schematic views of a needle hub in accordance with one embodiment of the disclosed subject matter;

[0048] **FIGURE 19** is a distal end view of a sharp in accordance with one embodiment of the disclosed subject matter;

[0049] **FIGURE 20** is a side view of a sharp in accordance with one embodiment of the disclosed subject matter;

[0050] **FIGURE 21** is a side view of a sharp in accordance with one embodiment of the disclosed subject matter;

[0051] **FIGURE 21A** is a perspective view with parts separated of an inserter in accordance with one embodiment of the disclosed subject matter;

[0052] **FIGURE 21B** is a schematic view of an alternate embodiment for forming a sharp to be used in an inserter in accordance with one embodiment of the disclosed subject matter;

[0053] **FIGURE 22** is a perspective view of an inserter in accordance with one embodiment of the disclosed subject matter;

[0054] **FIGURE 23** is a perspective view with parts separated of an inserter in accordance with one embodiment of the disclosed subject matter;

[0055] **FIGURE 24** is an enlarged sectional view with parts separated of an inserter in accordance with one embodiment of the disclosed subject matter;

[0056] **FIGURES 24A-24C** depict an alternative method for retaining a sharp and sensor within the sensor housing;

[0057] **FIGURES 25-27** are perspective views of components of the inserter of FIGURE 10 in accordance with the disclosed subject matter;

[0058] **FIGURES 28-29** are sectional views of the inserter of FIGURE 10 in accordance with the disclosed subject matter;

[0059] **FIGURES 30-31** are sectional views of components of the inserter of FIGURE 10 in accordance with the disclosed subject matter;

[0060] **FIGURE 31A** is a sectional view of components of the inserter of FIGURE 10 shown separated from the on-body unit in accordance with the disclosed subject matter.

[0061] **FIGURES 32-33** illustrate, by schematic, a power supply switch mechanism including conductive plug of the on-body integrated sensor and sensor electronics assembly in accordance with embodiments of the disclosed subject matter;

[0062] **FIGURE 34** is a perspective view of an embodiment of an inserter in accordance with one embodiment of the disclosed subject matter;

[0063] **FIGURES 35-36** are perspective views of the inserter of FIGURE 34 in accordance with the disclosed subject matter;

[0064] **FIGURES 37-39** are sectional, perspective views of the inserter of FIGURE 34 in accordance with the disclosed subject matter;

[0065] **FIGURES 40-41** are perspective views of the inserter of FIGURE 34 in accordance with the disclosed subject matter;

[0066] **FIGURES 42-43** are perspective views of another embodiment of an inserter in accordance with the disclosed subject matter;

[0067] **FIGURES 44-49** are perspective views of components of the inserter of FIGURE 42 in accordance with the disclosed subject matter;

[0068] **FIGURE 50** is a sectional view of the inserter of FIGURE 42 in accordance with the disclosed subject matter;

[0069] **FIGURE 51** is a sectional, perspective view of the inserter of Figure 42 in accordance with the disclosed subject matter;

[0070] **FIGURE 52** is a perspective view of the inserter of FIGURE 42 in accordance with the disclosed subject matter;

[0071] **FIGURES 53-54** are sectional, perspective views of the inserter of FIGURE 42 in accordance with the disclosed subject matter;

[0072] **FIGURES 55-56** are perspective views of the inserter of FIGURE 42 in accordance with the disclosed subject matter;

[0073] **FIGURES 57-58** are perspective views of another embodiment of an inserter in accordance with the disclosed subject matter;

[0074] **FIGURES 59-63** are perspective views of components of the inserter of FIGURE 57 in accordance with the disclosed subject matter;

[0075] **FIGURE 64** is a sectional views of the inserter of FIGURE 57 in accordance with the disclosed subject matter;

[0076] **FIGURES 65-67** are sectional, perspective views of the inserter of Figure 57 in accordance with the disclosed subject matter;

[0077] **FIGURE 68** is a perspective view of another embodiment of an inserter In accordance with the disclosed subject matter;

[0078] **FIGURE 69** is a side view of the inserter of FIGURE 68 in accordance with the disclosed subject matter;

[0079] **FIGURES 70-71** are cross-sectional views of the inserter of FIGURE 68 in accordance with the disclosed subject matter;

[0080] **FIGURE 72** is a cross-sectional view of another inserter in accordance with the disclosed subject matter;

[0081] **FIGURE 72A** is an exploded perspective view of the inserter of FIGURE 72 in accordance with the disclosed subject matter;

[0082] **FIGURES 72B-I** are perspective views of the inserter of FIGURE 72 showing the assembly of various components in accordance with the disclosed subject matter;

[0083] **FIGURES 72J-N** are cross-sectional views of the inserter of FIGURE 72 in accordance with the disclosed subject matter;

[0084] **FIGURE 72O** illustrates a process for utilizing a sterilized versions of the inserter of FIGURE 72 in accordance with the disclosed subject matter;

[0085] **FIGURE 72P** illustrates an alternate process for utilizing a sterilized versions of the inserter of FIGURE 72 in accordance with the disclosed subject matter;

[0086] **FIGURE 73** is a perspective view of another inserter in accordance with the disclosed subject matter;

[0087] **FIGURE 73A** is a perspective view of a component of the inserter of FIGURE 73 in accordance with the disclosed subject matter;

[0088] **FIGURE 73B** is a cross-sectional view of a component of the inserter of FIGURE 73 in accordance with the disclosed subject matter;

[0089] **FIGURES 73C-G** are perspective views of a components of the inserter of FIGURE 73 in accordance with the disclosed subject matter;

[0090] **FIGURES 73H-N** are cross-sectional views of the inserter of FIGURE 73 in accordance with the disclosed subject matter;

[0091] **FIGURE 73O** illustrates a process for utilizing a sterilized versions of the inserter of FIGURE 72 in accordance with the disclosed subject matter;

[0092] **FIGURE 74** is a perspective view of another inserter in accordance with the disclosed subject matter;

[0093] **FIGURES 75-82** are additional views of the components of the inserter of FIGURE 74 in accordance with the disclosed subject matter;

[0094] **FIGURE 83-88** are cross-sectional views of the inserter of FIGURE 73 in accordance with the disclosed subject matter; and

[0095] **FIGURES 89-90** are views of an alternate embodiment of the inserter of FIGURE 73 in accordance with the disclosed subject matter.

DETAILED DESCRIPTION OF THE EMBODIMENTS

[0096] A detailed description of the disclosure is provided herein. It should be understood, in connection with the following description, that the subject matter is not limited to particular embodiments described, as the particular embodiments of the subject matter may, of course, vary. It is also to be understood that the terminology used herein is for the purpose of describing

particular embodiments only, and is not intended to be limiting, since the scope of the disclosed subject matter will be limited only by the appended claims.

[0097] Where a range of values is provided, it is understood that each intervening value between the upper and lower limit of that range, and any other stated or intervening value in that stated range, is encompassed within the disclosed subject matter. Every range stated is also intended to specifically disclose each and every "subrange" of the stated range. That is, each and every range smaller than the outside range specified by the outside upper and outside lower limits given for a range, whose upper and lower limits are within the range from said outside lower limit to said outside upper limit (unless the context clearly dictates otherwise), is also to be understood as encompassed within the disclosed subject matter, subject to any specifically excluded range or limit within the stated range. Where a range is stated by specifying one or both of an upper and lower limit, ranges excluding either or both of those stated limits, or including one or both of them, are also encompassed within the disclosed subject matter, regardless of whether or not words such as "from," "to," "through," or "including" are or are not used in describing the range.

[0098] Unless defined otherwise, all technical and scientific terms used herein have the same meaning as commonly understood by one of ordinary skill in the art to which this disclosed subject matter belongs. Although any methods and materials similar or equivalent to those described herein can also be used in the practice or testing of the present disclosed subject matter, this disclosure may specifically mention certain exemplary methods and materials.

[0099] All publications mentioned in this disclosure are, unless otherwise specified, incorporated by reference herein for all purposes, including without limitation to disclose and describe the methods and/or materials in connection with which the publications are cited.

[00100] The publications discussed herein are provided solely for their disclosure prior to the filing date of the present application. Nothing herein is to be construed as an admission that the present disclosed subject matter is not entitled to antedate such publication by virtue of prior invention. Further, the dates of publication provided may be different from the actual publication dates, which may need to be independently confirmed.

[00101] As used herein and in the appended claims, the singular forms "a," "an," and "the" include plural referents unless the context clearly dictates otherwise.

[00102] Nothing contained in the Abstract or the Summary should be understood as limiting the scope of the disclosure. The Abstract and the Summary are provided for bibliographic and convenience purposes and due to their formats and purposes should not be considered comprehensive.

[00103] As will be apparent to those of skill in the art upon reading this disclosure, each of the individual embodiments described and illustrated herein has discrete components and features which may be readily separated from or combined with the features of any of the other several embodiments without departing from the scope or spirit of the present disclosed subject matter. Any recited method can be carried out in the order of events recited, or in any other order which is logically possible. Reference to a singular item includes the possibility that there are plural of the same item present. When two or more items (for example, elements or processes) are referenced by an alternative "or," this indicates that either could be present separately or any

combination of them could be present together except where the presence of one necessarily excludes the other or others.

System Overview

[00104] Embodiments include analyte monitors that are provided in small, lightweight, battery-powered and electronically-controlled systems. Such systems may be configured to detect physical parameters of subjects, such as signals indicative of *in vivo* analyte levels using an electrochemical sensor, and collect such signals, with or without processing. The electrochemical sensors may employ any suitable measurement technique, *e.g.*, may detect current, may employ potentiometry, etc. Techniques may include, but are not limited to amperometry, coulometry, and voltammetry. In some embodiments, sensing systems may be optical, colorimetric, and the like. In some embodiments, the portion of the system that performs this initial processing may be configured to provide the raw or at least initially processed data to another unit for further collection and/or processing. Such provision of data may be effected, for example, by a wired connection, such as an electrical, or by a wireless connection, such as an IR or RF connection.

[00105] Certain embodiments of analyte-monitoring systems for *in vivo* measurement employ a sensor that measures analyte levels in interstitial fluids at least partially under the surface of the subject's skin. A sensor in such a system may operate as an electrochemical cell. Such a sensor may use any of a variety of electrode configurations, such as a three-electrode configuration (*e.g.,* with "working," "reference," and "counter" electrodes) driven by a controlled potential (potentiostat) analog circuit; a two-electrode system configuration (*e.g.,* with only working and counter electrodes or a working electrode and a counter/reference electrode), which may be self-

biasing and/or self-powered; and/or other configurations (see, *e.g.*, U.S. Patent Application Serial No. 12/393,921, the disclosure of which is incorporated by reference herein for all purposes). In some embodiments, the sensor may be positioned within a blood vessel.

[00106] In certain systems, the analyte sensor is in communication with a sensor control unit. As used in this disclosure, an on-body unit sometimes refers to such a combination of an analyte sensor with such a sensor control unit. The on-body unit may include a housing in which the sensor control unit electronics and at least a portion of the sensor are received.

[00107] Certain embodiments are modular. The on-body unit may be separately provided as a physically distinct assembly from a monitor unit, *e.g.*, which displays or otherwise indicates analyte levels to a user. The on-body unit may be configured to provide the analyte levels detected by the sensor and/or other information (such as temperature, sensor life, etc.) over a communication link to the monitor unit. The monitor unit, in some embodiments, may include, *e.g.*, a mobile telephone device, an in vitro glucose meter, a personal digital assistant, or other consumer electronics such as MP3 device, camera, radio, personal computer, etc., or other communication-enabled data-processing device.

[00108] The monitor unit may perform a variety of functions such as but not limited to data storage and/or processing and/or analysis and/or communication, etc., on the received analyte data to generate information pertaining to the monitored analyte levels and/or process the other information. The monitor unit may incorporate a display screen, which can be used, for example, to display measured analyte levels, and/or an audio component such as a speaker to audibly provide information to a user, and/or a vibration device to provide tactile feedback to a user. It is also useful for a user of an analyte-monitoring system to be able to see trend

indications (including the magnitude and direction of any ongoing trend, *e.g.*, the rate of change of an analyte or other parameter, and the amount of time a subject is above and/or below a threshold, such as a hypoglycemic and/or hyperglycemic threshold, etc.); such data may be displayed either numerically, or by a visual indicator such as an arrow that may vary in visual attributes, like size, shape, color, animation, or direction. The monitor unit may further be adapted to receive information from or about an *in vitro* anal yte test strip, which may be manually or automatically entered into the monitor unit. In some embodiments a monitor unit may incorporate an *in vitro* analyte test strip port and related electronics in order to be able to make discrete (*e.g.*, blood glucose) measurements using an *in vitro* test strip (see, *e.g.*, U.S. Patent No. 6,175,752, the disclosure of which is incorporated by reference herein for all purposes).

[00109] The modularity of these systems may vary where one or more components may be constructed to be single use and one or more may be constructed to be re-useable. In some embodiments the sensor is designed to be attachable and detachable from the sensor control unit (and the on-body unit may be reusable), *e.g.*, so that one or more of the components may be reused one or more times, while in other embodiments, the sensor and sensor control unit may be provided as an integrated, undetachable package, which may be designed to be disposable after use, *i.e.*, not re-used.

[00110] FIGURE 1 shows one embodiment of an analyte measurement system 10. In such a system, a data-processing unit or sensor control unit 12 may interact with an analyte sensor 14 to obtain signals representative of analyte levels. Sensor control unit 12 may further include communications circuitry with associated electronics (not shown). In some embodiments, the

sensor control unit 12 and at least a portion of a sensor are configured to be maintained "on the body" of the subject, in the substantially same position on the body of the subject, for a period of time that may include hours, days, weeks, or a month or more. Accordingly, the sensor control unit 12 and sensor 14 may be referred to collectively herein as an on-body unit 16. A monitor unit 18 may also be provided. In the embodiment shown, sensor control unit 12 and monitor unit 18 communicate *via* connection 20 (in this embodiment, a wireless radio frequency (RF) connection). Communication may occur, *e.g.*, *via* RF communication, infrared communication, Bluetooth communication, Zigbee communication, 802.1x communication, or WiFi communication, etc. In some embodiments, the communication may include a radio frequency of 433 MHz, 13.56 MHz, or the like. In some embodiments, communication between sensor control unit 12 and monitor unit 18 may include radio frequency identification (RFID) techniques, and may be active RFID or passive RFID, where in some embodiments passive RFID technology and the respective system components include the necessary components therefor. For example, in certain embodiments, the on-body unit 16 and the monitor unit 18 may be configured to communicate using RFID communication protocol, wherein the on-body unit 16 may be configured to communicate or provide analyte-related signals to the monitor unit 18 based on the presence or reception of at least one signal from the monitor unit 18. That is, in certain embodiments, the monitor unit 18 may be configured to provide or radiate RF power signals, and when the on-body unit 16 is positioned within the radiated or provided RF signal range radiated from the monitor unit 18, the on-body unit 16 in certain embodiments is configured to provide one or more signals associated with the monitored analyte level received from the analyte sensor 14 to the monitor unit 18. For example, in one embodiment, the monitor unit may include a backscatter RFID reader configured to transmit an RF field such that when

the on-body unit is within the transmitted RF field, an antenna is tuned and in turn provides a reflected or response signal (for example, a backscatter signal) to the monitor unit. The reflected or response signal may include sampled analyte level data from the analyte sensor. Additional exemplary details for various embodiments can be found in, *e.g.*, U.S. Patent Application Serial No. 12/698,124 filed February 1, 2010, the disclosure of which is incorporated by reference herein for all purposes.

[00111] In some embodiments, a secondary monitor unit 22 may be provided. A data-processing terminal 24 may also be included, *e.g.*, for providing further processing or review of analyte data. In some embodiments, the secondary monitor unit 22 may include similar components and/or functionalities as the monitor unit 18, or alternatively, include more or less functionalities or components compared to the monitor unit 18 to, for example, analyze, process, store, and/or communicate data from the analyte sensor 14 and/or monitor unit 18.

[00112] In some embodiments, system 10 may be a continuous analyte monitor (*e.g.*, a continuous glucose-monitoring system or CGM), and accordingly operate in a mode in which the communications *via* connection 20 has sufficient range to support a flow of data from on-body unit 16 to monitor unit 18. In some embodiments, the data flow in a CGM system is automatically provided by the on-body unit 16 to the monitor unit 18. For example, no user intervention may be required for the on-body unit 16 to send the data to the monitor unit 18, *e.g.*, it may be continually and/or automatically broadcasted. In some embodiments, the on-body unit 16 provides signal relating to analyte level to the monitor unit 18 automatically and periodically. For example, one or more signals may be provided, *e.g.*, automatically sent, on a schedule, *e.g.*, once every 250ms, once a second, once a minute, etc. That is, in certain embodiments, the on-

body unit 16 may be configured and/or programmed to communicate or transmit the data acquired from the analyte sensor 14 based on a predetermined schedule, and continue to broadcast or transmit signals related to the real time monitored analyte levels based on the predetermined schedule. In such embodiments, the monitor unit 18 may be configured to receive and/or anticipate and acquire the transmitted signals from the on-body unit 16 based on the predetermined schedule, for example, for further processing, such as display, storing, analysis, and/or further data communication.

[00113] In some embodiments, one or more signals may be provided to the monitor unit 18 upon the occurrence of, or impending occurrence of, an event, *e.g.*, a hyperglycemic event or a hypoglycemic event, etc. In some embodiments, the one or more signals may be provided to the monitor unit 18 on an adaptive schedule. For example, the schedule for automatically communicating the one or more signals may be adjusted by machine learning techniques (*e.g.*, supervised learning techniques, unsupervised learning techniques, data mining, etc.) according to parameters received by the sensor control unit 12 and/or monitor unit 18, such as, *e.g.*, analyte values and trends, activity levels, meal times, etc.). In some embodiments, sensor control unit 12 may further include local memory in which it may record "logged data" or buffered data collected over a period of time and provide some or all of the accumulated data to monitor unit 18 from time-to-time. Or, a separate data-logging unit may be provided to acquire periodically provided data from sensor control unit 12. Data transmission in a CGM system may be one-way communication, *e.g.*, the on-body unit 16 provides data to the monitor unit 18 without receiving signals from the monitor unit 18 In some embodiments, two-way communication is provided between the on-body unit 16 and the monitor unit 18, using, for example, one or more transceivers or other bi-directional communication components. Such two-way communication

may be achieved in certain embodiments independently. That is, in certain embodiments, certain data communication from the on-body unit 16 may be independent of the data received from the monitor unit 18. In other embodiments, certain data communication from the on-body unit 16 may in response or responsive to the data, signal, request, or one or more commands received from the monitor unit 18.

[00114] In some embodiments, one or more signals may be provided to the monitor unit 18 from the on-body unit on user demand. According to such embodiments, the monitor unit 18 requests data from the on-body unit 16. Accordingly, embodiments include systems in which data is transferred from the on-body unit to the monitor unit only when the monitor unit invokes data from the on-body unit.

[00115] The data transfer request may be provided in several ways. For example, in some embodiments, one or both of the on-body unit 16 and monitor unit 18 may include a mechanical switch activatable by a user or activated upon some other action or event, the activation of which initiates the transfer of signal from the on-body unit 16 to the monitor unit 18. A mechanical switch may be provided which is activatable by the user to cause power to be turned on to the on-body system, *e.g.*, to electronic components that control the sensor.

[00116] In some embodiments, the monitor unit 18 is placed in close proximity (*e.g.*, within a range of about one to about ten inches or less in certain embodiments) with the communications electronics of the on-body unit to cause initiation of data transfer from the on-body unit to the monitor unit, either over a wired connection, or wirelessly by various means, including, for example, various RF-carried encodings and protocols and IR links.

[00117] In some embodiments, a signal relating to analyte level is instantaneously generated by the analyte sensor 14 upon receipt of the request, and provided to the monitor unit 18 as requested.

[00118] In other embodiments, a signal relating to analyte level is obtained according to a schedule, *e.g.*, once every 250ms, once a second, once a minute, etc., and at least temporarily stored. Upon receipt of the data transfer request at the on-body unit 16 from the monitor unit 18, analyte-related information is provided to the monitor unit 18 from the on-body unit 16. In some cases, analyte-related information provided to the monitor unit 18 is or at least includes the most recent analyte signal(s).

[00119] In further embodiments, additional data is provided to the monitor unit 18 on demand. For example, analyte trend data may be provided. Such trend data may include two or more analyte data points to indicate that analyte levels are rising, falling, or stable. Analyte trend data may include data from longer periods of time, such as, *e.g.*, several minutes, several hours, several days, or several weeks.

[00120] Further details regarding on-demand systems are disclosed in U.S. Patent Publication Nos. 2009/0018425 A1, published January 15, 2009; 2009/0054749 A1, published February 26, 2009; 2009/0257911 A1, published October 15, 2009, 2009/0281406 A1, published November 12, 2009; 2009/0294277 A1, published December 3, 2009; 2008/0058625 A1, published March 6, 2008; 2008/0064937 A1, published March 13, 2008; 2008/0071157 A1, published March 20, 2008; 2008/0071158 A1, published March 20, 2008; 2008/0179187 A1, published July 31, 2008; 2008/0319295 A1, published December 25, 2008;2008/0319296 A1, published December 25, 2008; 2007/0149873 A1, published June 28, 2007;2007/0149875 A1, published June 28, 2007;

2009/0321277 A1, published December 31, 2009; 2010/0030052 A1, published February 4, 2010; and pending U.S. Patent Application Nos. 12/211,014, filed September 15, 2008; 12/242,780, filed September 30, 2008; 12/393,921, filed February 27, 2009; 12/495,709, filed June 30, 2009; 12/495,712, filed June 30, 2009; 12/495,730, filed June 30, 2009; 12/544,061, filed August 19, 2009; 12/625,185, filed November 24, 2009; 12/625,208, filed November 24, 2009; 12/625,524, filed November 24, 2009; 12/625,525, filed November 24, 2009; 12/625,528, filed November 24, 2009; 12/624,767, filed November 24, 2009; 12/628,177, filed November 30, 2009; 12/628,198, filed November 30, 2009; 12/628,201, filed November 30, 2009; 12/628,203, filed November 30, 2009; 12/628,210, filed November 30, 2009; 12/698,129, filed February 1, 2010; 12/698,124, filed February 1, 2010; 12/714,439, filed February 26, 2010; 61/163,006, filed March 24, 2009; 61/227,967, filed July 23, 2009; 61/238,159, filed August 29, 2009; 61/238,483, filed August 31, 2009; 61/238,494, filed August 31, 2009; 61/238,581, filed August 31, 2009; 61/247,508, filed September 30, 2009; 61/247,514, filed September 30, 2009; 61/247,516, filed September 30, 2009; 61/247,519, filed September 30, 2009; 61/249,535, filed October 7, 2009; 61/256,925, filed October 30, 2009; 61/291,326, filed December 31, 2009; 61/299,924, filed January 29, 2010; 61/297,625, filed January 22, 2010; 61/297,615, filed January 22, 2010, each of which is incorporated by reference herein for all purposes.

The Sensor

[00121] The analyte sensor 14 of the analyte measurement system 10 may be used to monitor levels of a wide variety of analytes. Analytes that may be monitored include, for example, acetylcholine, amylase, bilirubin, cholesterol, chorionic gonadotropin, creatine kinase (*e.g.*, CK-MB), creatine, DNA, fructosamine, glucose, glutamine, growth hormones, hormones, ketones,

lactate, peroxide, prostate-specific antigen, prothrombin, RNA, thyroid-stimulating hormone, and troponin. The concentration of drugs, such as, for example, antibiotics (*e.g.*, gentamicin, vancomycin, and the like), digitoxin, digoxin, drugs of abuse, theophylline, and warfarin, may also be monitored. One or more analyte may be monitored by a given sensor.

[00122] In one embodiment of the present disclosure, sensor 14 is physically positioned in or on the body of a user whose analyte level is being monitored. Sensor 14 may be configured to continuously sample the analyte level of the user and convert the sampled analyte level, *e.g.*, glucose concentration into a corresponding data signal, *e.g.*, a current or voltage, for input into sensor control unit electronics. Alternatively, sensor 14 may be configured to sample analyte levels on demand. The sensor control unit electronics may amplify, filter, average, and/or otherwise process signal provided by the sensor.

[00123] The sensor may take on a number of forms. For example, the sensor may include a flexible or rigid substrate. In some embodiments, the sensor may be a wire. In some embodiments, the sensor may include two or three or more electrodes.

[00124] An embodiment of the sensor 14 is illustrated in FIGURE 2. The shape(s) described herein are exemplary only. Other sensor shapes are contemplated. In some embodiments, sensor 14 includes a substrate which is a dielectric, *e.g.*, a polymer or plastic material, such as polyester or polyamide. In this embodiment, the sensor is constructed so that a portion is positionable beneath skin and a portion is above skin. Accordingly, sensor 14 includes an insertion or internal portion 30 and an external or electrical contact portion 32. The contact portion 32 typically includes several conductive contacts 36, 38, and 40 (herein shown as three contacts) for connection to other electronics, *e.g.*, at the sensor control unit 12. The contacts provided in this

embodiment are for a working electrode, a reference electrode, and a counter electrode. In some embodiments, two or more working electrodes are provided. The operative portions of these electrodes, that is, working electrode, reference electrode, and counter electrode (not individually shown), are provided at the insertion portion, *e.g.*, at the distal end of insertion portion 30, *e.g.*, portion 34. In some embodiments, one or more electrodes may be external to the body, *e.g.*, an external counter electrode. The contact and operative portions of the electrodes are connected by circuit traces 42, 44, and 46 running on the surface of the substrate. In some embodiments, the traces are provided in channels, or may be embedded within the substrate, or may traverse different sides of the substrate. The conductive contacts, conductive traces, and electrodes are fabricated from conductive material, such as platinum, palladium, gold, carbon, or the like. More than one material may be used for a given sensor. Further details of sensors are described, *e.g.*, in U.S. Patent Nos. 6,175,572 and 6,103,033, which are incorporated by reference herein for all purposes.

[00125] Sensor 14 may include a proximal retention portion 48. In some embodiments, the insertion portion 30 and the proximal retention portion 48 are substantially longitudinally aligned. The insertion portion 30 and the proximal retention portion 48 are sized and configured to be positioned with a sharp for installation into the skin of a subject, as described herein. In use, the sensor 14 may be configured to bend (*e.g.*, along the line B) and therefore be positioned in two substantially perpendicular, intersecting planes.

[00126] As illustrated in FIGURE 3, sensor 14' is substantially identical to sensor 14, with many of the differences illustrated in FIGURE 3 and noted herein. Sensor 14" further includes additional features useful for connecting to, *e.g.*, mounting to or in or on, a housing associated

with the sensor control unit 12. For example, sensor 14' includes a laterally displaced portion (or sensor tab) 50' and a connector portion, shown in this embodiments as a longitudinal displaced portion 52' which provides a path for electrical connections, *e.g.*, the conductive traces, between the proximal and distal portions of the sensor. Sensor 14' is further provided with a notch or cut-out 54' between the proximal retention portion 48' and the longitudinal displaced portion 52'. Such configuration facilitates the sensor 14' to bend (*e.g.*, along the line indicated by line B) and therefore be positioned in two substantially perpendicular, intersecting planes, as illustrated in FIGURE 4. As will be described below, the sensor tab 50' can be encased in the portion of the body of the sensor control unit 12 to aid in securing and positioning the sensor 14'. Proximal retention portion 48' maintains its longitudinal alignment with insertion portion 30 for positioning within an insertion sharp.

[00127] FIGURES 5A and 5B illustrate a further embodiment of a sensor 14" in accordance with the disclosure. Sensor 14" is substantially identical to sensor 14 and 14', with certain exemplary differences illustrated in FIGURE 4 and noted herein. For example, sensor 14" includes a contact portion 32' which defines a fan-like configuration having a curved edge. The contact portion 32" typically includes several conductive contacts 36", 38", and 40" (herein shown as three contacts) for connection to other electronics, *e.g.*, at the sensor control unit 12. The contacts provided in this embodiment are for a working electrode, a reference electrode, and a counter electrode. In some embodiments, two or more working electrodes are provided. The operative portions of these electrodes, that is, working electrode, reference electrode, and counter electrode (not individually shown), are provided at the insertion portion, *e.g.*, at the distal end of insertion portion 30", *e.g.*, portion 34". The contact and operative portions of the electrodes are connected by circuit traces 42", 44", and 46" running on the surface of substrate, provided in

channels, embedded within the substrate, or traversing different sides of the substrate, substantially as described in connection with FIGURES 2 and 3. Sensor 14" defines a sensor flag indentation 56 " which also serves to assist in retaining the sensor 14" in a vertical orientation, as will be described below, and provides a discrete location for mating with a feature of the sensor control unit 12, *e.g.*, the bottom surface of a printed circuit board. Sensor 14" is likewise capable of bending along axis B, as illustrated in FIGURE 5B. In any of the embodiments of the sensor described herein, the distance between insertion portion 30 to retention portion 48 may be, *e.g.*, about 5 mm, or about 10 mm, or about 15 mm, or about 20 mm.

[00128] FIGURE 6A illustrates a further embodiment of a sensor 14''' in accordance with the disclosure. Sensor 14''' is substantially identical to sensor 14, 14' and 14", with certain exemplary differences illustrated in FIGURE 6A and noted herein. For example, sensor 14''' includes a contact portion 32'''. The contact portion 32''' typically includes several conductive contacts 36''', 38''', and 40''' (herein shown as three contacts) for connection to other electronics, *e.g.*, at the sensor control unit 12. The contacts provided in this embodiment are for a working electrode, a reference electrode, and a counter electrode. In some embodiments, two or more working electrodes are provided. The operative portions of these electrodes, that is, working electrode, reference electrode, and counter electrode (not individually shown), are provided at the insertion portion, *e.g.*, at the distal end of insertion portion 30''', *e.g.*, portion 34'''. As shown, contact portion 32''', proximal retention portion 48'''and the distal portion 30''' of sensor 14''' are linearly aligned with respect to one another. The contact and operative portions of the electrodes may be connected by circuit traces running on the surface of the substrate. In some embodiments, the circuit traces may be embedded within the substrate, or traversing different

sides of the substrate. Sensor 14''' is likewise capable of bending along axis B, as illustrated in FIGURE 6B. In FIGURE 6B, contacts 36''', 38''', and 40''' are not visible, because they are located on the underside of contact portion 32''' and thus not shown in this view. It is understood that sensor 14''' may be positioned such that when the sensor is placed in contact with surrounding circuitry the contacts are downwardly positioned to engage circuitry below the contact portion 32''' or, in some embodiments, the contacts are upwardly directed to engage circuitry positioned above the contact portion 32'''. In any of the embodiments of the sensor described herein, the distance between insertion portion 30 to retention portion 48 may be, *e.g.*, about 5 mm, or about 10 mm, or about 15 mm, or about 20 mm.

[00129] Embodiments of analyte sensors have been described herein to operate electrochemically, through an arrangement of electrodes having chemical sensing layers applied thereto, by generating an electrical current proportional to the volume of a redox reaction of the analyte (and indicative of analyte concentration), catalyzed by an analyte-specific oxidizing enzyme. Embodiments exist in which the number of electrodes provided to bring about and detect the level of these reactions is two, three, or a greater number. However, other types of sensors may be employed as described herein.

[00130] A portion of sensor 14 (which collectively refers to sensors 14', 14', and 14''' herein) may be situated above the surface of the skin, with a distal portion 30 penetrating through the skin and into the subcutaneous space in contact with the user's biofluid, such as interstitial fluid. Further details regarding the electrochemistry of sensor 14 is provided in U.S. Patent Nos. 5,264,104; 5,356,786; 5,262,035; 5,320,725; and 6,990,366, each of which is incorporated by reference herein for all purposes.

[00131] In some embodiments, the sensor is implantable into a subject's body for a usage period (*e.g.*, a minute or more, at least one day or more, about one to about 30 days or even longer, about three to about ten days, about three to about seven days, or in some embodiments, longer periods of up to several weeks) to contact and monitor an analyte present in a biological fluid. In this regard, the sensor can be disposed in a subject at a variety of sites (*e.g.*, abdomen, upper arm, thigh, etc.), including intramuscularly, transcutaneously, intravascularly, or in a body cavity.

[00132] In some embodiments, sensor 14 is employed by insertion and/or implantation into a user's body for some usage period. In such embodiments, the substrate may be formed from a relatively flexible material.

[00133] While the embodiments illustrated in FIGURES 2-6 have three electrodes, other embodiments can include a fewer or greater number of electrodes. For example, a two-electrode sensor can be utilized. The sensor 14 may be externally-powered and allow a current to pass proportional to the amount of analyte present. Alternatively, the sensor 14 itself may act as a current source in some embodiments. In some two-electrode embodiments, the sensor may be self-biasing and there may be no need for a reference electrode. An exemplary self-powered, two-electrode sensor is described in U.S. Patent Application Serial No. 12/393,921, filed February 26, 2009, and entitled "Self-Powered Analyte Sensor," which is hereby incorporated by reference herein for all purposes. The level of current provided by a self-powered sensor may be low, for example, on the order of nanoamperes, in certain embodiments.

On Body Unit

[00134] An exemplary configuration for a sensor 14 (and sensors 14' 14", and 14"') and sensor control unit 12 (*e.g.,* collectively, on-body unit 16) is illustrated in FIGURES 7-8. Sensor control unit 12, including its associated electronics 80, are housed in housing 122. Sensor housing 122 may be provided with a substantially circular configuration, or other shape. Sensor housing 122 has a reduced height (*i.e.*, "Z"-dimension) to provide a low profile when sitting on the skin of the subject. In some embodiments, the height is about 3 mm to about 25 mm, *e.g.*, may be about 4 mm, about 5 mm, about 10 mm, or about 15 mm. In certain embodiments, the sensor housing 122 may have a variable height such that it may have at least one portion that has a height that differs from at least one other portion. For example, electronics 80 may include one or more of, *e.g.*, an analog interface for connecting to the sensor 14, a processor, which may include, *e.g.*, an ASIC 91, antenna 94, power supply 82 to power the sensor and/or communications components, and capacitors 93. In some embodiments, power supply 82 provides a current or voltage to the analyte sensor only. In some embodiments, power supply 82 also powers a communications circuit for providing signal to the monitor unit 18. Power supply 82 may be used to charge capacitors 93 for such periodic signal communication. A serial communication section may be provided. A temperature sensor, such as a thermistor that detects skin temperature, sensor temperature, and/or ambient temperature may be included to provide compensation to the analyte signal. An RF communication circuit is provided to communicate with the monitor unit 18. (See, FIGURES 1 or 9.) A data storage unit may be provided to store analyte data over a period of time, which in some embodiments may be a short term of time, *e.g.,* several hours or minutes, or over a longer term, *e.g.*, several days or weeks. Additional optional electronics include a serial communication section, a leakage detection circuit, or user input, *e.g.,*

a switch to activate/deactivate some or all functions of the device. Many of the components may be combined together and/or their function provided by common components. Furthermore, certain components may be eliminated entirely. For example, a power supply may be omitted if power is provided by inductive coupling.

[00135] In some embodiments, a portion of sensor 14 is disposed on or within housing 122, *e.g.*, in a bent configuration, as illustrated in certain embodiments herein, *e.g.*, in FIGURES 4, 6, and 6B. In some embodiments, a portion of the contact portion of the sensor may be located on an outer surface of the sensor housing 122. The contact portion 32 of sensor 14 may be oriented in a substantially horizontal configuration (*e.g.*, substantially parallel to the skin surface to which it is attached), and secured to a printed circuit board of the sensor control unit 12. The insertion portion 30 of the sensor 14 may extend in a substantially downwardly vertical orientation for placement in the skin of the subject. In some embodiments, the insertion portion 30 is provided with a substantially sharpened and/or pointed configuration to facilitate piercing of the skin. See, *e.g.*, U.S. Patent Application Serial No. 61/238,159 filed August 29, 2009, which is incorporated by reference herein for all purposes. It is understood that sensor 14 may be disposed in other configurations, *e.g.*, in an entirely substantially vertical configuration, etc. As a further example, the insertion portion 30 may be disposed at an oblique angle, *e.g.*, between about 0° and about 90° with respect to the skin surface.

[00136] Adhesive pad 118 is illustrated in FIGURE 8 to attach sensor housing 122 to the skin of the subject. In some embodiments, adhesive pad 118 is used instead of a separate mount. Adhesive pad 118 may include adhesive on both distal (upper) and proximal (lower) surfaces, such that adhesive pad is attached or attachable to both sensor housing 122 and the skin of the

subject. In some embodiments, adhesive pad 118 may be first attached to the skin of the subject with the adhesive on the distal surface thereof. Subsequently, the housing 122 is adhered to the proximal surface of the adhesive pad 118. In other embodiments, proximal surface of adhesive pad 118 is first attached to sensor housing 122, and subsequently, the distal surface of adhesive pad 118 is then attached to the skin of the subject.

[00137] As illustrated in FIGURE 9, the on-body unit 16 communicates with the monitor unit 18. Such communication may be one-way communication, *e.g.*, from the on-body unit 16 to the monitor unit 18. In some embodiments, the communication may be two-way, *e.g.*, both from the on-body unit 16 to the monitor unit 18 and from the monitor unit 18 to the on-body unit 16. Communication between the on-body unit 16 and monitor unit 18 may be achieved using one or more radio frequency communication protocols, inductive coupling, magnetic coupling, direct wired connection, infrared data communication protocol, and the like as described herein.

Insertion Assembly

[00138] Insertion assemblies are provided, which are used to install a medical device to the subject. In some embodiments, an insertion assembly includes an inserter and the medical device itself. The inserter can be configured to insert various medical devices into the subject, such as for example, an analyte sensor, an infusion set, or a cannula. In some embodiments, the inserter can be configured to install a combination of such devices, *e.g.*, a combined sensor/infusion set, etc., at the same or different times or locations. For example, in certain embodiments a given inserter can be configured to install a first device and a second device at different times. In this regard, the inserter can be reusable. For example, an inserter may be modifiable to be used with more than one medical device, to include more than one type of

medical device, *e.g.*, by attaching an adapter and/or removing detaching a portion of an inserter. The inserter can install the medical device in, under, or through the skin of the subject, or place the medical device on the surface of the skin. The medical device can include features or structures, *e.g.*, barbs, tabs, adhesive, etc., to maintain the device in position with respect to the skin after insertion. The inserter device may also be used as a lancet, *e.g.*, to pierce the skin without inserting or installing a medical device.

[00139] In some embodiments, an insertion assembly includes an inserter, a medical device, such as an analyte sensor, and a mount for supporting the medical device at least partially in or on the skin of the subject. In some embodiments, the mount is a support structure, plate and/or member which is attached, adhered, or otherwise secured to the skin of the subject. The mount may be inserted simultaneously with the medical device by the inserter. In other embodiments, the mount is installed after or before installation of the medical device. A mount may be applied by the inserter or separately. The mount may include features or structures (*e.g.*, adhesive, guides, barbs, tabs, etc.) to maintain the sensor in position with respect to the skin after insertion and/or maintain the sensor in relative position with respect to the sensor control unit. In some embodiments, an adhesive pad or strip is used to secure the medical device, *e.g.*, the sensor and/or the sensor control unit, and no mount is used.

[00140] In some embodiments, an insertion assembly includes an inserter, an analyte sensor, a mount, and a power supply. The mount and power supply may be inserted simultaneously with the analyte sensor by the inserter. In other embodiments, the mount and battery are installed after or before installation of the analyte sensor. In such case the mount and/or power supply may be applied by the inserter or separately. The power supply may be used to provide a current

or a potential to the sensor and/or to provide power for communication of one or more signals to the monitor unit.

[00141] In some embodiments, an insertion assembly includes an inserter, a medical device such as an analyte sensor, a mount, and a sensor control unit. The mount and sensor control unit may be deployed and/or installed simultaneously with the analyte sensor by the inserter. In other embodiments, the mount and sensor control unit are installed after or before installation of the analyte sensor. For example, the mount and the analyte sensor may be installed by the inserter, and the sensor control unit may be subsequently installed. In other embodiments, the mount is installed, followed by insertion of the analyte sensor by the inserter, and further followed by installation of the sensor control unit. In other embodiments, the mount and sensor control unit are installed first, and the analyte sensor is subsequently installed.

[00142] In some embodiments, electronics of the sensor control unit provide a voltage or current to the analyte sensor. In some embodiments, the electronics processes signals provided by the analyte sensor. In further embodiments, the electronics may include communication functionality for providing signal relating to signal provided by the analyte sensor to a further component, such as, *e.g.*, a monitor unit, a computer, or other component. In some embodiments, communications circuitry, such as RFID antenna or communications circuitry, is provided. The power supply may be used to power some or all of these functions. In some embodiments, power is provided from the monitor unit, *e.g.*, via inductive coupling.

[00143] An inserter can include a plurality of different components. For example, an inserter may include one or more components for advancing a sharp towards the skin of the subject. The sensor and sensor control unit and/or mounting structure may be supported by a support

structure, such as a carriage. A driver may be provided for advancing the sharp and/or the analyte sensor/support structure. In some embodiments, the actuator is directly or indirectly coupled to the sharp and/or support structure, such that manual force and speed applied by the user to the actuator is transferred to the sharp and/or support structure. In some embodiments, the applied force drives the sharp and/or support structure between a retracted position and an advanced position. In some embodiments, the sensor and sensor control unit and/or mounting structure is maintained in a retracted position prior to installation by contacting projections extending inwardly from a sheath. In accordance with this embodiment, the sensor and sensor control unit and/or mounting structure are temporarily maintained operatively between the support structure and the projections disposed on the interior wall of the sheath.

[00144] An inserter can also include one or more components for retracting the sharp, while allowing the analyte sensor and optional mount and/or electronics to remain on the subject. The components for retracting the sharp can include a retractor. It is understood that the retractor and the actuator may be the same structure or include some common components. In some embodiments, the retractor is directly or indirectly coupled to the sharp such that the manual force applied by the user is transferred from the retractor to the sharp to retract the sharp from the skin. In other embodiments, a drive assembly may be provided to retract the sharp. For example, the drive assembly may include a spring, motor, hydraulic piston, etc., to retract the sharp away from the skin of the subject. The drive assembly may also include a linear drive component.

[00145] In some embodiments, the retractor withdraws the sharp upon actuation by the user. In such cases, the user actuates the retractor when it is desired to withdraw the sharp. For

example, the retractor may include a release switch. Upon activation of the release switch, the drive assembly, *e.g.*, the spring or other driver, retracts the sharp from the skin. In other embodiments, the retractor and the actuator include common components. After activating the actuator to advance the sharp and the analyte sensor, the user releases the actuator, which allows the drive assembly to withdraw the sharp from the skin.

[00146] In some embodiments, the retractor withdraws the sharp without further user interaction after actuation of insertion. For example, the inserter may include features or components which automatically retract the sharp upon advancement of the sharp and support structure by a predetermined amount. Inserter devices, in which no further action by the user is required to initiate withdrawal of the sharp after insertion, are referred to herein as having "automatic" withdrawal of the sharp.

Inserter Devices

[00147] An inserter 100 in accordance with an exemplary embodiment is illustrated in FIGURE 10. In some embodiments, inserter 100 has a maximum diameter of about 30mm to about 60 mm, *e.g.*, about 40 mm, about 43 mm, about 43.5 mm, about 50.5 mm, about 54.5 mm, etc. In some embodiments, inserter 100 has a maximum height of about 40 mm to about 80 mm, *e.g.*, about 44 mm, about 46 mm, about 50 mm, about 53 mm, about 67 mm, about 71 mm, etc. In some embodiments, inserter 100 has a volume of about 35 cm^3 to about 110 cm^3, *e.g.*, about 40 cm^3, about 41 cm^3, about 50 cm^3, about 60 cm^3, about 61 cm^3, about 62 cm^3, about 69 cm^3, about 70 cm^3, about 79 cm^3, about 90 cm^3, about 106 cm^3, etc. Inserter 100 includes a handle 102 and a removable distal cap 104. The cap 104 may maintain a sterile, contaminant-free environment for the medical device and sharp housed therein. As illustrated in FIGURES 10-13,

distal cap 104 is detachably secured to handle 102, *e.g.*, by use of one or more mating members, *e.g.*, threads 110 and 111, or hooks, tape, magnets, adhesive, friction-fit, snap-fit, and the like. Inserter 100 includes a base 142 which defines a distal surface 112, which may be a substantially planar surface as shown in this embodiment, for placement on the skin S of a subject, and in other embodiments may be a curved or inclined surface, *e.g.*, a concave or convex surface. Inserter 100 may be utilized to advance a medical device into the skin of the subject, *e.g.*, an analyte sensor, and infusion set, etc., as described herein. In some embodiments, handle 102 is advanced relative to base 142 in order to advance the medical device into the skin of the patient, as will be described in greater detail herein.

[00148] The components of inserter 100 are illustrated in FIGURES 11-27. As illustrated in FIGURE 11, handle 102 includes a contact surface 114 for contact by a user to depress to advance the sensor housing 122 (as illustrated in FIGURE 10) and sensor 14 towards the skin of the subject. Threads 110 are provided on handle 102 (as illustrated in FIGURE 11) for attachment to cap 104 *via* threads 111 (as illustrated in FIGURES 12-13). Cap 104 can include a receptacle, such as an upwardly extending sleeve 125 to assist holding sensor housing 122 fixed in position. The distal portion of cap 104 includes a recess 115 for retaining a desiccant 190 therein. In some embodiments, a silica gel or molecular sieves may be used. Such material can be in granular form (pellets) or pressed into tablets, or otherwise. In some embodiments, silica gel tablets are used. Embodiments may include desiccant and/or packaging as described in U.S. Patent Application Serial No. 12/714,439, which is incorporated by reference herein for all purposes.

[00149] Cap 104 may be provided with one or more apertures 117, which allows for passage of air to the desiccant 190 to remove moisture from the interior of the inserter 100. Cap 104 may include a stop such as an annular ridge 113, which engages the distal edge portion 116 of handle 102. In some embodiments, a stop such as annular ridge 113 prevents distal movement of handle 102 (as well as sensor housing 122) when cap 104 is attached to handle 102.

[00150] Base 142, as illustrated in FIGURES 10 and 14, includes a distal sheath portion 192, which shields sharp 124 and sensor housing 122 prior to deployment and a distal rim 112 having a substantially planar surface configuration to rest on the subject's skin S. Base 142 also includes side walls 191, which along with inner rail 128 defines a recess for retraction spring 146. Base 142 provides a spring retention portion 148, as illustrated in FIGURE 29.

[00151] Support member or shuttle 134, as illustrated in FIGURES 15-16, supports needle hub 136, from which sharp 124 extends longitudinally within the inserter 100. In some embodiments, the sharp is supported at an oblique angle, *e.g.*, between and including about 0° (parallel to the skin) and about 90° (normal to the skin) with respect to the skin surface. Needle hub 136 can be secured to shuttle 134 *via* interlocking snaps or tabs, an O-ring configuration, adhesive, insert-molding, or other techniques known in the art. Alternatively, needle hub 136 may be integrally molded with shuttle 134. In some embodiments, sharp 124 is a solid needle. In some embodiments, sharp 124 is provided with a substantially cylindrical configuration defining an interior bore, *e.g.*, a rigid cylindrical member or a hypodermic-style needle.

[00152] Needle hub 136 is further illustrated in FIGURES 17-18. Needle hub 136 supports sharp 124, having a sharpened distal portion 160. In some embodiments, as discussed herein, a longitudinal wall opening or gap 162 is provided in at least a portion of the wall of the sharp 124.

The length N of the gap 162 is selected to be commensurate with the length of the insertion portion 30 through to the proximal retention portion 48 of the sensor, and in certain embodiments may be about 3 mm to about 50 mm, *e.g.*, about 5 mm, or about 10 mm, or about 15 mm, or about 20 mm. The length L of the sharp 124 may be about 3 mm to about 50 mm, *e.g.*, 5mm or more, or about 10 mm, or about 20 mm, or about 30 mm, or about 50 mm, and is selected based upon the length of the insertion portion 30 of a sensor and the desired depth of the insertion portion 30 of the sensor 14. In some embodiments, the distance or spacing between the two edges of the gap is about 0.2mm to about 0.5mm, *e.g.*, about 0.22mm, about 0.25mm, etc.

[00153] The distal portion 160 of sharp 124 is illustrated in greater detail in FIGURES 19-21. As illustrated in FIGURE 19, sharp 124 has a substantially "C"- or "U"-shaped profile in this embodiment, but may have other configurations, *e.g.*, substantially "V"-shaped. A longitudinal gap 162 is provided in the wall of the sharp 124. FIGURE 20 illustrates distal portion 160 is provided with an angled tip. In some embodiments, the angled tip may be provided with a first angled tip portion 164 and a second steep-angled tip portion 166. The exemplary configuration, which includes multiple edges and faces, provides a sharp point to reduce penetration force, trauma, and bleeding for the subject. The distal section of the sensor body has a width sized to fit within the notch 162 of the insertion sharp 124 having a diameter less than about 20 to about 26 gauge, *e.g.*, 21 gauge to about 25 gauge, where in certain embodiments the sharp is 21 gauge or 23 gauge or 25 gauge. Such sharp may be used with a sensor having a width or diameter - - at least the portion that is carried by the sharp - - of about .20 mm to about .80 mm, *e.g.*, about .25 mm to about .60 mm, where in some embodiments the width or diameter of at least a portion of a sensor is .27 mm or .33 mm or .58 mm. In some embodiments, sharp 124 is fabricated from a sheet of metal and folded into a substantially "V" or "U" or "C" configuration in cross-section.

Various technologies can be used to manufacture a folded sheet of metal to form sharp 124. For example, etched-sheet metal technology can be used to form the sharp 124. In this manner, the sharp can be formed having a very sharp edge so that penetration through the skin during insertion is less painful. In other embodiments, a progressive die technology may be utilized to form a complex sheet-metal shape that has a sharp edge as depicted in FIGURE 21A. In some embodiments, the sharp 124 can be molded with a plastic cap so that the sharp can be handled during the inserter assembly process. Further, the die cut sharp may be molded with plastic to reinforce the "V," "U," or "C" shaped sheet metal configuration. In other embodiments, a laser-cut sharp can be formed. In this manner, the laser can be used to form the wall opening or gap 162 and first-angled tip portion 164 and a second, steep-angled tip portion 166.

[00154] In another embodiment, sharp 224 may be formed from a standard hypodermic needle utilizing the method depicted in FIGURE 21B. First, the hypodermic needle (having a circular cross-section) is cut to the desired length for sharp 224. Next, the hypodermic needle is compressed so that its cross-section is permanently deformed from a circular shape to an oval shape. The tip of the hypodermic needle is then ground to a bevel to produce a sharp point to reduce the required penetration force, as previously discussed. Finally, the top section of the needle is removed by appropriate techniques (e.g., grinding, electropolish, etc.). The resulting sharp 224 has a "U"-shaped configuration and provides ample space for the insertion of sensor 14. In some embodiments, the tip-grinding step and the compression step may be carried out in reversed order.

[00155] Due to the compression step, a user may initially start with a larger diameter hypodermic needle so that the finished sharp 224 will have similar dimensions to the previously described sharps.

[00156] FIGURES 22-23 illustrate the position of sensor housing 122 with respect to the needle hub 136 and sharp 124. The sensor housing 122 can be configured to hold at least a portion of sensor 14 and sensor control unit 12. As illustrated in FIGURE 22, the sharp 124 extends through an aperture 168 in the sensor housing 122. Thus, in some embodiments, the sharp 124 is uncoupled to sensor housing 122. The distal portion of sensor 14 is positioned with the sharp 124. As further illustrated in FIGURE 23, electronics 80 of the sensor control unit 12 (*e.g.*, a printed circuit board containing electronics components of the on-body unit 16) and sensor hub 123 are positioned within sensor housing 122. Sensor 14 may include a positioning structure, or slit 127 which receives a positioning member, such as tab 129 of sensor hub 123. A power supply 82, such as a battery, *e.g.*, a single use disposable battery, or rechargeable battery, is provided. The power supply 82 is used to provide potential or current to the sensor in some embodiments. In embodiments where a passive communications protocol such as passive RFID is used, no power supply is provided for the communications. Such power is provided by the monitor unit 18. In some embodiments where the sensor control unit is used to transmit one or more signals, one or more power supplies may be used to provide power for such communications circuitry. In some embodiments, the active operational life of the battery may exceed the active operational life of the sensor 14.

[00157] FIGURE 24 illustrates in cross-section the orientation of the sensor housing 122 with respect to the sharp 124 of inserter 100. As discussed herein, sensor 14 is disposed in a

substantially bent configuration in some embodiments, such that a portion of the sensor, *e.g.*, the insertion portion 30 and the proximal retention portion 48, are substantially vertical (*e.g.*, substantially aligned with the longitudinal axis of the inserter 100 and substantially perpendicular to the skin surface) and the contact portion 32 (shown in profile) is oriented in a substantially horizontal configuration, and in electrical contact with the data-processing unit electronics, such as circuit 80. The sensor tab 50 can be encased in the plastic of the sensor housing 122 (*e.g.*, "overmolded") and secured in place. The notch 56 provides further stability to the sensor 14, *e.g.*, by allowing the sensor tab 50 to be encased by the material of the sensor housing 122, and further provides a means for vertically orienting the sensor 14 during mounting, *e.g.*, by allowing vertical positioning of the notch 56 with respect to a vertical landmark of the sensor housing 122.

[00158] The sensor 14, mounted with the sensor housing 122, can be disposed within a recess of the carriage 130 such as a concave recess in the carriage 130. Alternatively, the sensor 14, mounted with the sensor housing 122 can be disposed between the support structure and one or more projections extending from the wall of the sheath. In yet another alternative, the sensor 14 mounted with the sensor housing 122 can be held in position by a releasable friction fit coupling to the sharp 124. In this manner, the carriage need not have a recess within which the sensor mounted with the sensor housing is disposed. In the initial configuration of the inserter 100 (see, *e.g.*, FIGURE 22) the sharp 124 extends through a longitudinal aperture 168 formed in a carriage 130. In some embodiments, the aperture 168 is appropriately sized, such that neither the sharp 124 nor needle hub 136 is in contact with the carriage 130. Accordingly, the needle hub 136 (and sharp 124) on the one hand, and the carriage 130 and the sensor housing 122, on the other hand, move simultaneously but independently from one another. In other embodiments, a friction fit may be provided between the aperture and the sharp.

[00159] The insertion portion 30 and proximal retention portion 48 of the sensor 14 are disposed within a longitudinal bore 162 within the sharp 124 (See, *e.g.*, FIGURE 19). The proximal retention portion 48 is disposed within the longitudinal bore of the sharp 124 and provides additional stability to the mounting of the sensor 14 within the sharp 124. The longitudinal wall gap or opening 162 of sharp 124 is aligned with the sensor 14, such that the tab 50 and the contact portion 32 extend laterally outward from the sharp 124.

[00160] In some embodiments, a resilient member 70 may be included to provide frictional contact with the sharp 124 and/or the sensor 14. Such frictional contact provides additional stability between the sensor housing 122 and sharp 124, as depicted in FIGURES 24A-24C. In some embodiments, resilient member 70 may be formed as a spherical, ovoid, cylindrical, cube-shaped member, etc. Resilient member 70 may be formed from any elastomeric material, e.g., molded plastic components, rubber, nitrile, viton, urethane, etc.

[00161] In some embodiments, resilient member 70 is press-fit into a recess, such as an eccentric bore 72 located in sensor housing 122 (FIGURE 24C). When sharp 124 is inserted within an aperture in the sensor housing 122, the resilient member 70 exerts a pressure on sharp 124 and sensor 14 to hold them firmly in groove 74. In some embodiments, groove 74 is a V-shape. Alternatively, groove 74 may be U-shaped depending on the configuration of sensor 14 and sharp 124. In some embodiments, resilient member 70 is provided with a flattened or recessed surface which abuts sharp 124.

[00162] With continued reference to FIGURES 15 and 16, shuttle 134 includes wings 182 and resilient distally extending fingers 184. Inner rail 128 is illustrated in FIGURE 25. As illustrated in FIGURE 26, shuttle 134 is sized and configured for longitudinal movement within inner rail

128. Wings 182 of shuttle 134 are configured for longitudinal movement within axial notches 188 of inner rail 128. When fingers 184 of shuttle 134 are disposed in their normally biased outward position, fingers 184 engage the lower surface 194 of inner rail 128. In the configuration illustrated in FIGURE 26, shuttle 134 is locked with respect to inner rail 128. As will be discussed herein, fingers 184 may be biased radially inward to allow upward movement of shuttle 134 relative to inner rail 128.

[00163] As illustrated in FIGURE 10, inner rail 128 includes an upper surface 186 for engagement with handle 102. In some embodiments, surface 186 is adhered or otherwise fixed to handle 102.

[00164] The relationship of inner rail 128, shuttle 134 and base 142 is illustrated in FIGURE 27. In an initial configuration, inner rail 128 and shuttle 134 are in a locked relationship by engagement of wings 182 and fingers 184. Inner rail 128 and shuttle 134 are axially movable within base 142. Spring 146, which is secured between spring retention portion 148 of base 142 and wings 182 of shuttle 134 biases the inner rail 128 and shuttle 134 in a proximal (upward) direction.

[00165] Inserter 100 is illustrated in section in FIGURES 28-29 prior to use in a sensor predeployment position. Cap 104 is attached to the distal portion of inserter 100, *e.g.*, *via* inter-engagement of threads 110 and 111.

[00166] As illustrated in FIGURE 28, the inserter 100 includes an initial configuration in which the handle 102 is disposed in a proximal position with respect to the base 142. In such configuration, the sharp 124 is disposed in a configuration spaced apart from an aperture of the adhesive layer 118.

[00167] As illustrated in FIGURE 30, inner rail 128 includes a carriage 130. In a sensor insertion position, the handle 102 is depressed downward (arrow D) against the bias of spring 146, the inner rail 128 moves downwardly with the carriage 130 and the sensor housing 122. Shuttle 134 supports needle hub 136, from which sharp 124 extends longitudinally within the inserter 100. Initially, shuttle 134 is coupled to inner rail 128 *via* inter-engagement of fingers 184 of shuttle 134 with distal surface 194 of inner rail 128, and both shuttle 134 and inner rail 128 move distally together as a unit.

[00168] As the sharp 124 is urged distally towards the subject's skin (FIGURE 30), it carries the sensor insertion portion 30 of sensor 14 into the subcutaneous portion of the subject's skin S and into contact with the interstitial fluid. As carriage 130 reaches a distal position, the distal surface of the sensor housing 122 engages the upper surface of adhesive pad 118, thereby becoming adhered to the skin surface S of the subject.

[00169] In some embodiments, components are provided which allow the shuttle to be disengaged from the handle 102. For example, flanges 170 on base 142 engage fingers 184 of shuttle 134. Fingers 184 are pivoted or bend inwards by contact with flanges 170 (as indicated by arrows F).

[00170] As illustrated in FIGURE 31, such pivoting of fingers 184 causes fingers 184 to become disengaged from distal edge 194 of inner rail 128. Shuttle 134 is thereby disengaged from inner rail 128. Disengagement of the shuttle 134 from the inner rail 128 permits the spring 146 decompress and to expand, thereby advancing the shuttle 134 to a proximal or retracted position, and withdrawing the sharp 124 from the sensor housing 122, withdrawing from its position around sensor 14, and receding from skin S of the subject, while leaving the sensor 14 in

the skin and the on body unit 16 attached to the skin surface by adhesive pad 118. Once the sharp has been withdrawn from the subject, it is no longer accessible from the distal portion of the inserter 100, which prevents accidental needle sticks. When the carriage 130 reaches the distal position in which flanges 170 engage fingers 184 of needle shuttle 134, needle shuttle 134 withdraws sharp 124 automatically without further input from the user.

[00171] As illustrated in FIGURE 31A, the inserter 100 may be removed from the skin S of the subject, leaving the on-body unit 16 installed on the subject, e.g., lower surface of housing 122 adhered to the skin S via adhesive pad 118 and sensor 14 at least partially inserted in the skin and in contact with the interstitial fluid.

[00172] Prior to activation of the on-body unit 16 which includes the integrated sensor 14 and sensor control unit 12 for use, there may be a period of time from the manufacturing that the assembly 16 may be in a "sleep" or "idle" mode. With a power supply such as a battery integrated within the assembly, for reasons including cost optimization and prolonging shelf life, some embodiments of the present disclosure include optional systems that are activated merely by positioning the sensor 14 and on-body unit 16 on a skin surface as described above, *i.e.*, no additional action may be required of the user other than applying a force to sensor housing 122. As such, insertion of the sensor 14 and/or mounting of the sensor housing 122 causes activation of the electronics 80. In certain embodiments, activation switch configurations are included which may be configured to be triggered, for example, by the insertion device activation, thereby turning on the integrated sensor and sensor electronics assembly into an active mode.

[00173] As illustrated in FIGURE 29, inserter 100 may be provided with a switch 185, which provides automatic activation of the electronics 80 of the sensor control unit 12. In some

embodiments, the switch 185 is a longitudinally slidable member or plunger extending distally from or otherwise disposed on the distal surface of the sensor housing 122. When the sensor housing is advanced proximally, it engages the adhesive pad 118, or alternatively the skin surface of the subject. Upon such engagement, the switch 185 is moved axially (proximally) with respect to the housing 122. When the sensor housing 122 is in approximation with the adhesive pad 118 and/or the skin of the subject, the plunger switch 185 is in the proximal position (not shown). Such axial movement may be used to activate the sensor electronics 80. In some embodiments, a switch 185 is spring biased. Accordingly, as long as the sensor housing 122 is maintained in a fixed relationship with the adhesive pad 118 against the bias, electronic activation is maintained in such embodiments. If the sensor housing 122 is removed from the adhesive or the skin, the switch 185 moves with the bias, and the electronics are deactivated. In other embodiments, the switch 185 provides a one-time activation of the electronics. In such cases, once the electronics are activated, the sensor housing 122 is not required to remain in contact with the adhesive or the skin in order to maintain activation.

[00174] As illustrated in FIGURES 32-33, embodiments of a power supply switch mechanism include conductive plugs of the on-body unit 16 in accordance with the present disclosure. FIGURES 32-33 illustrate enlarged sectional views of sensor housing 122. As shown, the sensor electronics assembly circuit board 860 may be provided with a physical gap 858 that breaks the electrical circuit between the power supply (*e.g.*, battery) and the other circuitry of the sensor electronics assembly.

[00175] In one embodiment, when the predetermined force is applied on the insertion device 100 as discussed above, a conductive portion 852 provided within the housing 122 of the sensor

electronics may be moved in a direction as shown by arrow 854 such that electrical contact is established in the physical gap 858 on the circuit board, by for example, the conductive portion 852 coming into physical contact with the conductive portions of the circuit board 860. In this manner, in one embodiment, the electrical path from the power supply and the remaining circuitry on the circuit board of the sensor electronics is completed, thereby powering the sensor electronics.

[00176] By way of another example, referring to FIGURE 33, the conductive portions 860 of the circuit board are provided on the board itself, and the conductive plug 856, for example, when pushed into the cavity 858, establishes electrical contact between the conductive portions 860 of the circuit board.

[00177] In one embodiment, as discussed above, the actuation of the insertion device 100 to position the sensor 14 and sensor electronics assembly triggers the switch mechanism shown in FIGURES 32-33 by also moving the conductive portion 852 or the conductive plug 856 in the direction complimentary to the direction of the introducer movement, and thereby switching on the sensor electronics. Within the scope of the present disclosure, the activation of the sensor electronics by moving the conductive portion 852 or the conductive plug 856 may include a separate procedure, where, after positioning the sensor and the sensor electronics assembly on the skin surface, a predetermined force is applied on the housing of the integrated sensor 14 and sensor electronics assembly such that the desired movement of the conductive portion 852 or the conductive plug 856 may be achieved. Further embodiments of the insertion devices are described in U.S. Patent Application Serial Nos. 61/149,639, filed February 3, 2009, and No. 12/698,129, filed February 1, 2010, which are incorporated by reference herein in their entirety.

[00178] An inserter 200 in accordance with another exemplary embodiment is illustrated in FIGURE 34. In some embodiments, inserter 200 has a maximum diameter, of about 30mm to about 60 mm, *e.g.*, about 40 mm, about 43 mm, about 43.5 mm, about 50.5 mm, about 54.5 mm, etc. In some embodiments, inserter 200 has a maximum height of about 40 mm to about 80 mm, *e.g.*, about 44 mm, about 46 mm, about 50 mm, about 53 mm, about 67 mm, about 71 mm, etc. In some embodiments, inserter 200 has a volume of about 35 cm^3 to about 110 cm^3, *e.g.*, about 40 cm^3, about 41 cm^3, about 50 cm^3, about 60 cm^3, about 61 cm^3, about 62 cm^3, about 69 cm^3, about 70 cm^3, about 79 cm^3, about 90 cm^3, about 106 cm^3, etc.

[00179] With reference to FIGURE 34, inserter 200 includes a housing 202 and a removable distal cap 204 for maintaining a sterile environment for the medical device and sharp housed therein. Housing 202 and distal cap 204 may be fabricated from any suitable materials such as metal, plastic, etc. In some embodiments cap 204 may be fabricated from a polymer or plastic material. Also provided is a removable proximal cover 206, which, among other things, prevents accidental deployment of the inserter 200. In some embodiments, proximal cover 206 is a sheet of material such as a foil sheet or the like secured to the upper surface of housing 202 using an adhesive, and may include a tab 208 to assist removal of the cover 206. Proximal cover 206 may also be a plastic sheet or member that forms a seal with housing 202. In some embodiments, proximal cover 206 may include a pull tab or a perforated section for easy removal.

[00180] As illustrated in FIGURE 35, proximal cover 206 and distal cap 204 are shown removed from inserter 200. Distal cap 204 is secured to housing 202, *e.g.*, by use of threads 210. In some embodiments, distal cap 204 is secured by a friction fit, snap fit, a bayonet mount, an adhesive, etc. Housing 202 includes a distal surface 212 for placement on the skin of a subject.

Inserter 200 includes an actuator 214 to advance a medical device into the skin of the subject. In some embodiments, actuator 214 is disposed within an opening 216 in housing 202 and can be longitudinally moveable within housing 202.

[00181] The distal portion of inserter 200 is illustrated in FIGURE 36. In some embodiments, an adhesive pad 218, having adhesive material 218 on both faces, is provided across the distal portion 212 of the housing 202. A central aperture 220 may be provided in adhesive pad 218. As will be described in greater detail herein, inserter 200 supports a medical device, such an analyte sensor housing 122 (not shown) and a sharp 224. In some embodiments, sensor housing 122, includes an analyte sensor 14 and a sensor control unit 12. During insertion, sharp 224 passes through aperture 220 and into the skin of the subject carrying at least the sensor with it.

[00182] FIGURE 37 illustrates inserter 200 in cross-section, in an initial configuration prior to use, after removal of the distal cap 204. Actuator 214 may be cylindrical in shape (or other shape as appropriate) and, including an upper contact surface 226, capable of being depressed by a user and/or a mechanism, as described herein. Actuator 214 may further include side walls 228 extending downwardly from upper surface 226, and which engage or otherwise contact the upper surface of carriage 230. Carriage 230 provides a support for holding the medical device, such as sensor housing 122 of on-body unit 16, prior to and during installation. In some embodiments, carriage 230 includes a distal portion 232, which may be configured to form a substantially concave recess 232a as shown in this embodiment, for supporting the medical device therein. In some embodiments, the sensor housing 122 is supported within the recess 232a of carriage 230 in a snap-fit or other relationship. In some embodiments, carriage 230 does not include a recess.

In such embodiments, carriage may include one or more projections which contact and/or advance the sensor housing 122.

[00183] In FIGURE 38 the longitudinal axis L of the inserter 200 is illustrated. Extending distally from the upper surface 226 of actuator 214 and substantially parallel to the longitudinal axis is a support member 234, which may have an elongated configuration. Support member 234 supports needle hub 236, from which sharp 224 extends longitudinally within the inserter 200. In some embodiments, the sharp 224 is supported at an oblique angle, *e.g.*, between and including about 0° and 90° with respect to the skin surface. Needle hub 236 can be secured to support member 234 via an interlocking O-ring configuration, adhesive, or other techniques known in the art. Support member 234 can be omitted and needle hub 236 can be secured to the actuator 214 directly in some embodiments.

[00184] In some embodiments, sharp 224 is a solid needle. In some embodiments, sharp 224 is provided with a substantially cylindrical configuration defining an interior bore, *e.g.*, a rigid cylindrical member or a hypodermic-style needle. Sharp 224 may also be provided with an elongated longitudinal opening or gap in the wall of the sharp 224 (see, sharp 224 in FIGURES 22-24). In some embodiments, sharp 224 is fabricated from a sheet of metal, and folded into a substantially "V" or "U" or "C" configuration in cross-section to define the longitudinal recess.

[00185] The sensor 14, mounted with the sensor housing 122, is carried by the carriage, *e.g.*, disposed within the concave recess 232a in the carriage 230, as described hereinabove (see, *e.g.*, FIGURES 22-24). In the initial configuration of the inserter 200 (see, *e.g.*, FIGURE 37), the sharp 224 extends through a longitudinal aperture 268 formed in the carriage 230. In some embodiments, the aperture 268 is appropriately sized, such that neither the sharp 224 nor needle

hub 236 is in contact with the carriage 230. In other words, in some embodiments a clearance may be provided between the surfaces of the carriage and the sharp and needle hub. In some cases, sharp 224 is capable of substantial lateral movement or "play" with respect to aperture 268. Accordingly, the needle hub 236 (and sharp 224) on the one hand, and the carriage 230 and the sensor housing 122, on the other hand, can move simultaneously but independently from one another.

[00186] Referring back to FIGURE 23, the insertion portion 30 and proximal retention portion 48 of the sensor 14 are disposed within a longitudinal bore of the sharp 224. The proximal retention portion 48 is disposed within the longitudinal bore of the sharp 224 and provides additional stability to the disposition of the sensor 14 within longitudinal bore of the sharp 224. The longitudinal wall gap of sharp 224 is aligned with the sensor 14, such that the tab 50 and the contact portion 32 extend laterally outward from the sharp 224.

[00187] With continued reference to FIGURE 37, an optional sheath 242 is positioned within housing 202, having an annular configuration and including a circumferential recess 244 in which a retraction spring 246 is positioned. The distal portion of spring 246 contacts a spring retention portion 248 in sheath 242. The proximal portion of spring 246 contacts one or more tabs 250 extending laterally outwardly from actuator 214. In the initial configuration, the spring 246 may be in a semi-compressed state, *i.e.*, not fully compressed, nor fully extended. It is understood that sheath 242 may be omitted from inserter 200, and a recess, such as recess 244, provided within housing 202. Similarly, recess 244 may be omitted entirely, and spring 246 or other actuator may be disposed between stops in housing 202.

[00188] Depression of the actuator 214 causes distal longitudinal movement of the carriage 230 and sharp 224, from a proximal position to a distal position. During such downward, distal movement, spring 246 is further compressed between spring retention portion 248 and flanges 250.

[00189] As illustrated in FIGURE 38, depression of the actuator 214 advances the inserter 200 from an initial configuration to a deployed configuration. Depression of the contact surface 226 moves the actuator side walls 228 and the tabs 250 downwardly distally against the bias of spring 246. Contact of the side wall 228 of the actuator 214 with the upper surface of the carriage 230 during depression of the actuator 214 imposes a downward force and consequential distal movement of the carriage 230. As the sharp 224 is urged distally, it carries the sensor insertion portion 30 into the subcutaneous portion of the subject's skin S.

[00190] As illustrated in FIGURE 37, flanges 270 are disposed in the inner wall of sheath 242. When carriage 230 reaches a distal position, as shown in FIGURE 38, the flanges 270 engage the proximal (upper) surface of the carriage 230, and thereby inhibit proximal movement of the carriage 230 (see also FIGURE 41). The distal (lower) surface of the sensor housing 122 engages the upper surface of adhesive pad 218, thereby becoming adhered to the skin surface S of the subject. As the flanges 270 engage the carriage 230, the flanges 270 also engage fingers 274 disposed on the proximal face of the carriage 230. Fingers 274 are pivoted inwards by flanges 270. Such pivoting of fingers 274 causes fingers 274 to become disengaged from retention tab 250 on actuator 214. Spring 246 is thereby permitted to decompress and expand, and thereby provide an upward force on actuator 214. If the user or some apparatus provides no downward force, or minimal downward force to overcome the bias of spring 246, the actuator

214, along with needle hub 236 and sharp 224 move proximally, withdrawing the sharp 224 from the skin S of the subject.

[00191] As shown in FIGURES 39 and 40, the actuator 214 and coupled sharp 224 is permitted to advance to a more proximal position than at the initial configuration illustrated in FIGURES 35 and 37. Thus the sharp 224 retracts from a distal position to a proximal position after installation of the on-body unit and insertion of at least a portion of the sensor. As illustrated in FIGURE 41, the carriage 230 is maintained in a distal position, but the sharp 224 has been withdrawn from the subject and is no longer accessible from the distal portion of the inserter 200, which prevents accidental needle sticks.

[00192] A further embodiment of an inserter is illustrated in FIGURES 42-56 and designated inserter 300. In some embodiments, inserter 300 has a maximum diameter of about 30mm to about 60 mm, *e.g.*, about 40 mm, about 43 mm, about 43.5 mm, about 50.5 mm, about 54.5 mm, etc. In some embodiments, inserter 300 has a maximum height of about 40 mm to about 80 mm, *e.g.*, about 44 mm, about 46 mm, about 50 mm, about 53 mm, about 67 mm, about 71 mm, etc. In some embodiments, inserter 300 has a volume of about 35 cm^3 to about 110 cm^3, *e.g.*, about 40 cm^3, about 41 cm^3, about 50 cm^3, about 60 cm^3, about 61 cm^3, about 62 cm^3, about 69 cm^3, about 70 cm^3, about 79 cm^3, about 90 cm^3, about 106 cm^3, etc.

[00193] As illustrated in FIGURE 42-43, inserter 300 includes, *e.g.*, a handle 302, a sheath 342, and a removable distal cap 304 for maintaining a sterile environment for the medical device and sharp housed therein. FIGURE 43 illustrates that distal cap 304 is removed from handle 302. Distal cap 304 is secured to handle 302 by one of a number of securement means, *e.g.*, by use of threads 310. Sheath 342 defines a distal surface 312 for placement on the skin of a

subject. Inserter 300 may be utilized to advance a medical device into the skin of the subject. In some embodiments, handle 302 is advanced relative to sheath 342 in order to advance the medical device into the skin of the patient.

[00194] The components of inserter 300 are illustrated in FIGURES 44-49. As illustrated in FIGURE 44, handle 302 may include threads 310 for attachment of cap 304 via threads 311 (as illustrated in FIGURE 46). It is understood that other securement techniques, such as a snap-fit or friction-fit may be used to secure cap 304. Cap 304 may include a receptacle 325 for positioning of the sharp 324. Sheath 342, as illustrated in FIGURE 45, includes longitudinal notches 382.

[00195] Projections 386 on carriage 330, as illustrated in FIGURE 47, are configured to engage sheath to secure carriage 330 within the inserter 300, thereby preventing release of the carriage from the inserter. Notches 384 allow for the free travel of projections 386. The bottom of the notches acts as the retention portion that prevents the carriage 330 from falling out of the inserter 300. Projections 375 engage with the triangular latch features 370 of the sheath 342 as illustrated in FIGURES 51 and 53.

[00196] Carriage 330 also is provided with fingers 374 which engage a shoulder wall 376 of handle 302 (as illustrated in FIGURE 51), as will be described in greater detail herein.

[00197] Inserter 300 also includes a spring retention component 348, as illustrated in FIGURE 48. Spring retention component 348 defines an upper surface 349, which engages spring 346 (as illustrated in FIGURE 51). Spring retention component 348 also includes locking towers 351, which engage flanges 328 of needle carrier 334 to prevent accidental deployment of the sharp 324 after use of the inserter 300 is completed.

[00198] Inserter 300 is illustrated in cross-section in FIGURE 50 prior to use. Cap 304 is attached to the distal portion of inserter 300, via securement means, such as inter-engagement of threads 310 and 311. Cap 304 includes a desiccant tablet 390; a seal, such as a foil seal 392; and a Tyvek® layer 394, which allows breathability between the desiccant tablet 390 and the interior of the inserter 300.

[00199] As illustrated in FIGURE 51, the inserter 300 includes an initial configuration in which the handle 302 is disposed in a proximal position with respect to the sheath 342. In such configuration, the sharp 324 is disposed in a configuration spaced apart from the aperture 320 of the adhesive layer 318. The distal portion of inserter 300 is illustrated in FIGURE 52.

[00200] With continued reference to FIGURE 51, the longitudinal axis L of the inserter 300 is illustrated. Extending distally from the upper surface of handle 302 is an inner wall portion 326 and intermediate wall portion 374. Support member 334 extends from wall portion 326 and supports needle hub 336, from which sharp 324 extends longitudinally within the inserter 300. In some embodiments, the sharp is supported at an oblique angle, *e.g.*, between 0° and 90° with respect to the skin surface.

[00201] Sheath 342 is positioned within handle 302, having an annular configuration in which a retraction spring 346 is positioned. The distal portion of spring 346 contacts a surface 349 of spring retention component 348. The proximal portion of spring 346 contacts the inner surface 350 of handle 302. In the initial configuration, the spring 346 is in an extended or semi-extended configuration.

[00202] FIGURE 53 illustrates inserter 300 in cross-section, during insertion. Depression of handle 302 with respect to sheath 342 against the bias of spring 346 causes distal longitudinal

movement of the carriage 330 and sharp 324, from a proximal position towards a distal position. During such downward, distal movement, spring 346 is compressed between surface 349 of spring retention component 348 and surface 350 of handle 302. As the sharp 324 is urged distally, it carries the sensor insertion portion 30 of sensor 14 into the subcutaneous portion of the subject's skin S.

[00203] As carriage 330 reaches a distal position, the distal surface of the sensor housing 122 engages the upper surface of adhesive pad 318, thereby becoming adhered to the skin surface S of the subject. Also, flange 370 engages fingers 374 disposed on the carriage 330. Fingers 374 are pivoted outwards by flanges 370 in direction T. Such pivoting of fingers 374 causes fingers 374 to become disengaged from slots 376 in intermediate housing walls 374. Carriage 330 is thereby disengaged from handle 302 and needle carrier 334.

[00204] As illustrated in FIGURE 54, handle 302, along with needle hub 336 and sharp 324 are permitted to move proximally, while the sheath 342 and sensor housing 122 remain adjacent to the skin of the subject. If the user or some apparatus provides no downward force, or minimal downward force to the handle 302 to overcome the bias of spring 346, spring 346 is permitted to expand, thereby withdrawing the sharp 324 from the skin S of the subject.

[00205] Upon reaching the proximal position, flanges 328 on needle carrier 334 engage locking towers 351 of needle floor component 348. The inter-engagement of flanges 328 and locking towers 351 prevents inadvertent deployment of sharp 324 after installation of the medical device.

[00206] As shown in FIGURES 55 and 56, the carriage 330 is maintained in a distal position, but the sharp 324 has been withdrawn from the subject and is no longer accessible from the distal portion of the inserter 300, which prevents accidental needle sticks.

[00207] A further embodiment of an inserter is illustrated in FIGURES 57-67, and designated inserter 400. In some embodiments, inserter 400 has a maximum diameter of about 30mm to about 60 mm, *e.g.*, about 40 mm, about 43 mm, about 43.5 mm, about 50.5 mm, about 54.5 mm, etc. In some embodiments, inserter 400 has a maximum height of about 40 mm to about 80 mm, *e.g.*, about 44 mm, about 46 mm, about 50 mm, about 53 mm, about 67 mm, about 71 mm, etc. In some embodiments, inserter 400 has a volume of about 35 cm^3 to about 110 cm^3, *e.g.*, about 40 cm^3, about 41 cm^3, about 50 cm^3, about 60 cm^3, about 61 cm^3, about 62 cm^3, about 69 cm^3, about 70 cm^3, about 79 cm^3, about 90 cm^3, about 106 cm^3, etc.

[00208] Inserter 400 generally includes, *e.g.*, a handle 402, sheath 442, and a removable distal cap 404 for maintaining a sterile environment for the medical device and sharp housed therein. As illustrated in FIGURE 58, distal cap 404 is shown removed from handle 402. Distal cap 404 is detachably secured to handle 402, *e.g.*, by use of threads 410. Sheath 442 includes a distal surface 412 for placement on the skin of a subject. Inserter 400 may be utilized to advance a medical device into the skin of the subject. In some embodiments, handle 402 is advanced relative to sheath 442 in order to advance the medical device distally and into the skin of the patient.

[00209] The components of inserter 400 are illustrated in FIGURES 59-63. As illustrated in FIGURE 59, handle 402 includes threads 410 for attachment of cap 404 via threads 411 (as illustrated in FIGURE 61). Cap 404 may include a receptacle 425 for positioning of the sharp

424. Sheath 442, as illustrated in FIGURE 60, includes longitudinal notches 482. Projections 486 on carriage 430, as illustrated in FIGURE 62, are configured to engage sheath 442 to secure carriage 430 within inserter 400, thereby preventing release of the carriage from the inserter. Sheath 442 also includes notches 484 which receive projection 475 of carriage 430. Notches 484 allow for the free travel of projections 486. The bottom of the notches acts as the retention portion that prevents the carriage 430 from falling out of the inserter 400. Projections 475 engage with the latch features 470 of the sheath 442 as illustrated in FIGURES 66 and 67. Carriage 430 also is provided with fingers 474 which engages a shoulder wall 476 of needle carrier 436, as illustrated in FIGURES 65-66, and as will be described in greater detail herein.

[00210] Sheath 442 also includes a spring retention portion 448, provided at the distal end of circumferential notch 496, as illustrated in FIGURES 60, 64 and 65. Needle carrier 434, as illustrated in FIGURE 63, includes wings 450, which provide an upper engagement surface for spring 446. Wings 450 also include recesses 451 including a shoulder 476 for engagement with fingers 474 of carriage 430.

[00211] Inserter 400 is illustrated in cross-section in FIGURE 64 in a state prior to use and prior to removal of cap 404, which is shown attached to the distal portion of handle 402, via inter-engagement of threads 410 and 411. Cap 404 includes a desiccant tablet 490, a seal such as a foil seal 492, and a Tyvek® layer 494, which allows breathability between the desiccant tablet 490 and the interior of the inserter 400.

[00212] As illustrated in FIGURE 65, the inserter 400 is shown in an initial configuration in which handle 402 is disposed in a proximal position with respect to the sheath 442. In such configuration, the sharp 424 is disposed in a configuration spaced apart from the aperture 420 of

the adhesive layer 418. The longitudinal axis L of the inserter 400 is illustrated. Extending distally from the upper surface of handle 402 is inner wall 475. The distal end portions of wall 475 provide a downward force on the carriage 430 upon depression of the handle 402 by a user. Alternatively, instead of handle having a distally extending inner wall, the carriage can include one or more upwardly extending walls or projections (not shown). The one or more upwardly extending inner walls or projections can have a length sufficient to either contact the upper surface of 402 or, alternatively, contact corresponding downwardly extending inner walls of the handle 402. In this manner, depression of handle 402 by a user provides a downward force on the one or more upwardly extending walls or projections of the carriage to advance the carriage (and on-body unit) distally to an installation and insertion position. In one embodiment a downwardly extending wall of the handle 402 and a corresponding upwardly extending wall of the carriage are aligned such that depression of the handle 402 by a user allows the upwardly extending wall and the downwardly extending wall to make direct contact, thereby permitting the carriage 430 and on-body unit to advance distally. In such embodiment, the downwardly extending inner wall of the handle has a distal end that is disposed proximally of the proximal most end of sheath 442.

[00213] Needle carrier 434 can be axially moveable within handle 402. Needle carrier 434 supports needle hub 436, from which sharp 424 extends longitudinally within inserter 400. In some embodiments, sharp 424 is supported at an oblique angle, *e.g.*, between and including about 0° and 90° with respect to the skin surface. Initially, needle carrier 434 is coupled to carriage 430 via inter-engagement of fingers 474 of carriage 430 with shoulder 476 of needle carrier 434. Spring 446 is disposed between spring retention portion 448 of sheath 442 and wings 450 (FIGURE 63) of needle carrier 434. Initially, spring 446 is in an expanded or semi-

expanded state while handle 402 is disposed proximally from sheath 442. In another exemplary embodiment, needle carrier 434 can be secured to handle 402, for example, secured to downwardly extending inner wall 475. In this manner, needle carrier and carriage 430 are longitudinally moveable with respect to sheath 442. In this regard, needle carrier 434 includes one or more apertures to receive one or more downwardly extending inner walls 475 of handle 402. In some embodiments, neither the needle carrier 434 nor the carriage 430 are in slidable contact with sheath 442, *e.g.*, spaced apart from sheath 442, during longitudinal movement of the needle carrier 434 and/or carriage 430.

[00214] FIGURE 66 illustrates inserter 400 in cross-section, during insertion. Depression of handle 402 with respect to sheath 442, against the bias of spring 446, causes distal longitudinal movement of the carriage 430 and needle carrier 434, from a proximal position towards a distal position. During such downward proximal movement, spring 446 is compressed between spring retention portion 448 and wings 450 (FIGURE 63) of needle carrier 434. As the sharp 424 is urged distally, it carries the sensor insertion portion 30 of sensor 14 (FIGURE 23) into the subcutaneous portion of the subject's skin S.

[00215] As carriage 430 reaches a distal position, the distal surface of the sensor housing 122 engages the upper surface of adhesive pad 418, thereby becoming adhered to the skin surface S of the subject. Flange 470 engages fingers 474 disposed on the carriage 430. Fingers 474 are pivoted outwards by flanges 470 in direction T. Such pivoting of fingers 474 causes fingers 474 to become disengaged from shoulder 476 of needle carrier 434. Needle carrier 434 is thereby disengaged from carriage 430.

[00216] As illustrated in FIGURE 67, disengagement of the needle carrier 434 from the carriage 430 permits the spring 446 to expand, thereby advancing the needle carrier 434 to a proximal position and withdrawing the sharp 424 from the skin S of the subject while leaving the sensor 14 in the skin. Once the sharp 424 has been withdrawn from the subject, it is no longer accessible from the distal portion of the inserter 400 and unable to make contact by accident with the subject's skin because it is positioned at a proximal position within the carrier handle 402.

[00217] A further embodiment of an inserter is illustrated in FIGURES 68-71 and designated inserter 500. In some embodiments, inserter 500 has a maximum diameter of about 30 mm to about 60 mm, *e.g.*, about 40 mm, about 43 mm, about 43.5 mm, about 50.5 mm, about 54.5 mm, etc. In some embodiments, inserter 500 has a maximum height of about 40 mm to about 80 mm, *e.g.*, about 44 mm, about 46 mm, about 50 mm, about 53 mm, about 67 mm, about 71 mm, etc. In some embodiments, inserter 500 has a volume of about 35 cm^3 to about 110 cm^3, *e.g.*, about 40 cm^3, about 41 cm^3, about 50 cm^3, about 60 cm^3, about 61 cm^3, about 62 cm^3, about 69 cm^3, about 70 cm^3, about 79 cm^3, about 90 cm^3, about 106 cm^3, etc.

[00218] Inserter 500 includes, *e.g.*, a bellows portion 502, a sheath 542, and a removable distal cap 504 for maintaining a sterile environment for the medical device and sharp housed therein. As illustrated in FIGURE 69, distal cap 504 is shown removed from sheath 542. Sheath 542 defines a distal surface 512 for placement on the skin of a subject. Inserter 500 may be utilized to advance a medical device into the skin of the subject. In some embodiments, bellows portion 502 is compressed in order to advance the medical device into the skin of the subject. Bellows portion 502 includes a series of concentric folds, including raised portions 516 and folded portions 518.

[00219] Inserter 500 is illustrated in cross-section in FIGURE 70 prior to use and prior to removal of cap 504, which is attached to sheath 542 via inter-engagement of threads 510 on sheath and threads 511 on cap 504. Cap 504 includes a desiccant tablet 590. Cap 504 may further include a receptacle for maintaining the position of the sharp 524 within the sheath 542 prior to use.

[00220] As illustrated in FIGURE 70, the inserter 500 includes an initial configuration in which the bellows portion 502 is disposed in a relaxed, extended position. In such configuration, the sharp 524 is disposed in a position spaced apart from the aperture 520 of the adhesive layer 518. The proximal end portion of the housing includes a button or actuator portion 514. Extending distally from the actuator portion 514 are side walls 528 and needle hub 536. Downward force on the actuator portion 514 causes a downward force on the needle hub 536 and on the carriage 530 (through coupling to side walls 528). Carriage 530 includes a recess 532 for reception of the sensor housing 122 therein. Sharp 524 extends longitudinally from needle hub 536 within the inserter 500. In some embodiments, the sharp is supported at an oblique angle, *e.g.*, between including about 0° and 90° with respect to the skin surface.

[00221] FIGURE 71 illustrates inserter 500 in cross-section, during insertion. Depression of bellows portion 502 with respect to sheath 542 against the bias of spring 546 causes distal longitudinal movement of the carriage 530 and sharp 524 from a proximal position toward a distal position. During such downward, proximal movement, spring 546 is compressed between an upper (proximal) portion adjacent to actuator 514 and a lower (distal) portion adjacent to sheath 542. As the sharp 524 is urged distally, it carries the sensor insertion portion 30 of sensor 14 (FIGURE 23) into the subcutaneous portion of the subject's skin S.

[00222] By removing downward force on the actuator portion 514, the bias of spring 546 provides an upward (proximal) force, which permits sharp 524 to withdraw from the skin S of the subject. Once the sharp 524 has been withdrawn from the subject, it is no longer accessible from the distal portion of the inserter 500, and unable to make contact by accident with the subject's skin.

[00223] An inserter 2400 in accordance with another exemplary embodiment is illustrated in FIGURE 72. In some embodiments, inserter 2400 has a maximum diameter, of about 30mm to about 60 mm, *e.g.*, about 40 mm, about 43 mm, about 43.5 mm, about 50.5 mm, about 54.5 mm, etc. In some embodiments, inserter 2400 has a maximum height of about 40 mm to about 80 mm, *e.g.*, about 44 mm, about 46 mm, about 50 mm, about 53 mm, about 67 mm, about 71 mm, etc. In some embodiments, inserter 2400 has a volume of about 35 cm^3 to about 110 cm^3, *e.g.*, about 40 cm^3, about 41 cm^3, about 50 cm^3, about 60 cm^3, about 61 cm^3, about 62 cm^3, about 69 cm^3, about 70 cm^3, about 79 cm^3, about 90 cm^3, about 106 cm^3, etc.

[00224] With reference to FIGURE 72, inserter 2400 includes a housing 2402 and a removable distal cap 2412 for maintaining a sterile environment for the medical device and sharp housed therein. Housing 2402 and distal cap 2412 may be fabricated from any suitable materials such as metal, plastic, etc. In some embodiments, cap 2412 may be fabricated from a polymer or plastic material.

[00225] An exploded view of the components of inserter 2400 is illustrated in FIGURE 72A. As shown, inserter 2400 generally comprises plunger 2405, spring 2406, housing 2402, sharp 2404, sensor housing 122, sharp holder 2408, adhesive patch 218, and cap 2412 when fully assembled.

[00226] A more detailed view of sharp holder 2408 is shown in FIGURE 72B. Needle holder 2408 retains sharp 2404 in a fixed position with respect to itself within inserter 2400, thereby allowing it to safely penetrate a subject's skin during later use.

[00227] To assemble inserter 2400, sharp 2404 is inserted through an opening in sensor housing 122 as shown in FIGURE 72C. Needle holder 2408 prevents sharp 2404 from being fully inserted through sensor housing 122. In some embodiments, sensor housing 122 includes an analyte sensor 14 and a sensor control unit 12.

[00228] Next, plunger 2405, spring 2406, and housing 2402 are assembled as shown in FIGURES 72D-72F. Plunger 2405 contains a spring retention member which is inserted through the center of spring 2406. Lip 2414 of plunger 2405 engages inner wall 2416 of housing 2402 when assembled (FIGURE 72). This causes spring 2406 to be contained between lip 2418 of housing member 2402 and the bottom surface 2424 of plunger 2405. The resulting sub-assembly of inserter 2400 shown in allows plunger 2405 to move between a proximal position, with spring 2406 fully extended, and a distal position, wherein bottom surface 2424 engages wall 2426 of housing 2402.

[00229] The sensor housing assembly shown in FIGURE 72C is then inserted into the inserter sub-assembly shown in FIGURES 72D-72F. As shown in FIGURE 72F, sensor housing 122 is inserted into housing 2402 with the tip of sharp 2404 pointing away from plunger 2405. The resulting assembly is depicted in FIGURE 72G. As shown in FIGURE 72, grooves on sharp holder 2408 engage tabs 2422 on plunger 2405.

[00230] Finally, adhesive patch 218 is placed over the opening of housing 2402 and cap 2412 is friction fit over housing 2402 as shown in FIGURE 72H. The fully assembled inserter 2400 is

depicted in FIGURE 72I. In some embodiments, adhesive pad 218 has an adhesive material on both faces. A central aperture 220 may be provided in adhesive pad 218 to allow sharp 2404 to be deployed into the skin of a subject. During insertion, sharp 2404 passes through aperture 220 and into the skin of the subject carrying at least the sensor with it.

[00231] FIGURE 72J illustrates inserter 2400 in cross-section, in an initial configuration prior to use, after removal of the distal cap 2412. As shown, sharp 2404 extends longitudinally within the inserter 2400. In some embodiments, sharp 2404 is supported at an oblique angle, *e.g.*, between and including about 0° and 90° with respect to the skin surface.

[00232] In some embodiments, sharp 2404 is a solid needle. In some embodiments, sharp 2404 is provided with a substantially cylindrical configuration defining an interior bore, *e.g.*, a rigid cylindrical member or a hypodermic-style needle. Sharp 2404 may also be provided with an elongated longitudinal opening or gap in the wall of the sharp 2404. In some embodiments, sharp 2404 is a fabricated from a sheet of metal, and folded into a substantially "V" or "U" or "C" configuration in cross-section to define the longitudinal recess.

[00233] Depression of plunger 2405 causes distal longitudinal movement of sensor housing 122 and sharp 2404, from a proximal position to a distal position. During such downward, distal movement, spring 246 is further compressed between lip 2418 and bottom surface 2424. Lip 2414 is pushed outward by sensor housing 122 and the friction between sensor housing 122 and lip 2414 of the housing hold the sensor housing 122 up against plunger 2405.

[00234] As illustrated in FIGURE 72K, depression of plunger 2405 advances the inserter 2400 from an initial configuration to a deployed configuration. Contact of plunger 2405 and sharp holder 2408 during depression of plunger 2405 imposes a downward force and

consequential distal movement of sharp 2405.the carriage 230. As the sharp 2404 is urged distally, it carries the sensor insertion portion 30 into the subcutaneous portion of the subject's skin S.

[00235] When plunger 2505 reaches a distal position, as shown in FIGURE 72L, bottom surface 2424 engages wall 2426 and prevents further downward movement. The distal (lower) surface of sensor housing 122 engages the upper surface of adhesive pad 218, thereby becoming adhered to the skin surface S of the subject.

[00236] As the subject or some apparatus removes force from pusher 2405, spring 2406 urges pusher 2405 toward its proximal position as shown in FIGURE 72M, leaving sensor housing 122 adhered to the skin surface S of the subject. Tabs 2424 provide additional force on sensor housing 122 to assist holding it to adhesive patch 218 while the sharp 2404 is withdrawn through sensor housing 122. Eventually, the upward force exerted by spring 2406 returns inserter 2400 to its initial configuration as illustrated in FIGURE 72N.

[00237] In some embodiments, inserter 2400 may be distributed in a sterilized package 2480 as depicted in FIGURE 72O. To use inserter 2400 in this configuration, a user would first clean the insertion site on the skin with alcohol. The subject would then remove inserter 2400 from sterilized package 2480 as shown in step 1. Next a subject would place the inserter on the insertion site and push down on inserter 2400 until sensor housing 122 is adhered to the subject's skin as shown in steps 2-3. Finally, the subject would remove inserter 2400 from the insertion site and dispose of the inserter.

[00238] In another embodiment, the sterilized inserter 2500 shown in FIGURE 72O may be utilized with driver apparatus 3900 (FIGURES 93-93H) as shown in FIGURE 72P. In this

manner, insertion of sensor housing unit is semi-automated which may deliver a more consistent user experience and reduce the risk of user error. Additionally, because inserter 2500 is already sterilized, utilizing the method depicted in FIGURE 72P also reduces the risk of possible infection.

[00239] A further embodiment of an inserter is illustrated in FIGURES 73-73N, and designated inserter 2500. In some embodiments, inserter 2500 has a maximum diameter of about 30mm to about 60 mm, *e.g.*, about 40 mm, about 43 mm, about 43.5 mm, about 50.25 mm, about 52 mm, etc. In some embodiments, inserter 2500 has a maximum height of about 40 mm to about 80 mm, *e.g.*, about 44 mm, about 46 mm, about 50.25 mm, about 53 mm, about 67 mm, about 71 mm, etc. In some embodiments, inserter 2500 has a volume of about 35 cm^3 to about 110 cm^3, *e.g.*, about 40 cm^3, about 41 cm^3, about 50 cm^3, about 60 cm^3, about 61 cm^3, about 62 cm^3, about 69 cm^3, about 70 cm^3, about 79 cm^3, about 90 cm^3, about 106 cm^3, etc.

[00240] Inserter 2500 generally includes, *e.g.*, a handle 2502, sheath 2512, and a removable distal cap 2504 for maintaining a sterile environment for the medical device and sharp housed therein (FIGURE 73). As illustrated in FIGURES 73A-73B, handle 2502 is shown removed from distal cap 2504. Distal cap 2504 is detachably secured to handle 2502, *e.g.*, by use of threads 2506. It is understood that cap may be secured using snap-fit or press-fit configuration. Inserter 2500 may be utilized to advance a medical device into the skin of the subject. In some embodiments, handle 2502 is advanced relative to sheath 2512 in order to advance the medical device distally and into the skin of the patient.

[00241] Handle 2502 further includes needle carrier guides 2508 which allow the needle carrier 2514 to slidingly move relative to distal cap 2504. Detent 2507 prevents sheath 2512

from moving towards a "firing position" until a minimum force is applied. Location feature 2510 allows for the proper positioning of distal cap 2508 and carriage 2516 when engaged.

[00242] Further components of inserter 2500 are illustrated in FIGURES 73C-73G. Sheath 2512, as illustrated in FIGURES 73C, may include longitudinal notches 2518 which snap into detents 2507. Retention members, such as ribs 2520, pinch spring arms 2522 located on carriage 2516 to prevent sensor housing 122 from falling out of inserter 2500 when sheath 2512 is in the extended position. Ribs 2520 do not extend to the bottom of sheath 2512, thus allowing carriage 2516 to release sensor housing 122 when it has traveled to the bottom of sheath 2512 during insertion. Interfering structure, such as locking beam 2524, prevents inserter 2500 from being used again once needle carrier 2514 passes the locking beam (FIGURE 73N). Specifically, locking feature 2526 of needle carrier 2514 engages with locking beam 2524 to prevent further use of inserter 2500.

[00243] Needle carrier 2514 is illustrated in greater detail in FIGURES 73D-73E. In some embodiments, needle carrier 2514 includes guides, such as rail guides 2528, which interface with rail guides 2508, thereby allowing needle carrier 2514 to slidingly move relative to handle 2502. Notches 2527 are provided in sheath 2512 which has a larger dimension than the wings 2550 of needle carrier 2514, such that the needle carrier 2514 does not contact sheath 2512 during longitudinal movement of needle carrier 2514. Needle carrier 2514 also comprises detents/notches 2530 which interface with the upper edge of the spring when inserter 2500 is fully assembled (see FIGURES 73H-73N). In some embodiments, needle carrier 2514 comprises an attachment feature 2532 capable of accommodating a custom needle hub or

attachment. Rails 2524, located on the inner perimeter of needle carrier 2514, slidingly engage with slots 2536 located on carriage 2516.

[00244] Carriage 2516 is illustrated in greater detail in FIGURES 73F-73G. As shown, carriage 2516 may comprise latches 2538 which connect it to needle carrier 2514 by locking with latches 2540. Spring hook 2542 allows for support for retaining sensor housing 122 when the inserter has not been fired and allows for release of sensor housing 122 when it has been attached to the skin of the user.

[00245] Inserter 2500 is illustrated in cross-section in FIGURE 73H in a state prior to use in which handle 2502 is disposed in a proximal position with respect to the sheath 2512. In such configuration, the sharp 2550 is disposed in a configuration spaced apart from the aperture 420 of the adhesive layer (not shown). The longitudinal axis L of the inserter 2500 is illustrated. The upper surface of spring 2544 is retained in inserter 2500 by detents/notches 2530 located on needle carrier 2514. The bottom surface of spring 2544 is retained by spring floor 2545 located on sheath 2512. Initially, spring 2544 is in an expanded or semi-expanded state while handle 2502 is disposed proximally from sheath 2512.

[00246] Extending distally from the upper surface of handle 2502 is inner wall 2552. In some embodiments, the distal end portions of wall 2508 provide a downward force on carriage 2516 upon depression of handle 2502 by a user. Alternatively, instead of handle 2502 having a distally extending inner wall 2508carriage 2516 can include one or more upwardly extending walls or projections (not shown). The one or more upwardly extending inner walls or projections can have a length sufficient to either contact the upper surface of handle 2502 or, alternatively, contact corresponding downwardly extending inner walls of handle 2502. In this manner,

depression of handle 2502 by a user provides a downward force on the one or more upwardly extending walls or projections of carriage 2516 to advance carriage 2516 (and sensor housing 122) distally to an installation and insertion position. In such embodiment, the downwardly extending inner wall of the handle has a distal end that is disposed proximally of the proximal most end of sheath 2512.

[00247] Sharp 2550 extends longitudinally from needle carrier 2514 within inserter 2500. In some embodiments, sharp 2550 is supported at an oblique angle, *e.g.*, between and including about 0° and 90° with respect to the skin surface.

[00248] FIGURE 73I illustrates inserter 2500 in cross-section after a user applies an initial downward force to button 2502. In some embodiments, a predetermined minimum force must be used so that longitudinal notches 2518 advance past detent 2507.

[00249] After detent 2507 has been overcome, further depression of handle 2502 with respect to sheath 2512, against the bias of spring 2544, causes distal longitudinal movement of the carriage 2516 and needle carrier 2514, from a proximal position towards a distal position as shown in FIGURE 73J. During such downward proximal movement, spring 2544 is compressed between detents/notches 2530 and retention tab 2546. As sharp 2550 is further urged distally, it carries the sensor insertion portion 30 of sensor 14 (FIGURE 23) into the subcutaneous portion of the subject's skin S.

[00250] As carriage 2516 reaches a distal position as shown in FIGURE 73J, the distal surface of the sensor housing 122 engages the upper surface of adhesive pad (not shown), thereby becoming adhered to the skin surface S of the subject. Latch 2538 engages the upper surface of retention tab 2546 as shown in FIGURES 73K. As a result, the top portion of latch 2538 is

pivoted outward in direction T. Such pivoting of latch 2538 causes needle carrier to become disengaged from carriage 2516.

[00251] As illustrated in FIGURE 73L, disengagement of the needle carrier 2514 from the carriage 2516 permits spring 2544 to expand, thereby advancing the needle carrier 2514 to a proximal position and withdrawing the sharp 2550 from the skin S of the subject while leaving the sensor housing 122 attached to the skin. As the sharp is withdrawn (FIGURE 73M), locking feature 2526 advances past locking beam 2524 because of the upward force exerted on needle carrier 2514 by spring 2544.

[00252] Referring now to FIGURE 73N, once the sharp 2550 has been withdrawn from the subject, button 2500 cannot be pressed again because any downward movement will be blocked by the interaction of locking beam 2524 and locking feature 2526.

[00253] In some embodiments, inserter 2500 may come in a sterilized package which is capable of a one-time use as shown in FIGURE 73O. To use inserter 2500 in this manner, a user would first sterilize the insertion site on the skin with alcohol. The subject would then twist off cap 2504 as shown in step 1. Next a subject would place the inserter on the sterilized insertion site and push down on inserter 2500 until sensor housing 122 is adhered to the subject's skin as shown in steps 2-3. Finally, the subject would remove inserter 2500 from the insertion site and dispose of the inserter. In this manner, the inserter 2500 itself serves as its own sterilized packaging.

[00254] A further embodiment of an inserter is illustrated in FIGURES 74-90, and designated inserter. In some embodiments, inserter 2700 has a maximum diameter of about 30mm to about 60 mm, *e.g.*, about 40 mm, about 43 mm, about 43.5 mm, about 46 mm, about 50 mm, etc. In

some embodiments, inserter 2700 has a maximum height of about 40 mm to about 80 mm, *e.g.*, about 44 mm, about 46 mm, about 49.5 mm, about 55 mm, about 67 mm, about 71 mm, etc. In some embodiments, inserter 2700 has a volume of about 35 cm^3 to about 110 cm^3, *e.g.*, about 40 cm^3, about 41 cm^3, about 50 cm^3, about 60 cm^3, about 61 cm^3, about 62 cm^3, about 69 cm^3, about 70 cm^3, about 79 cm^3, about 90 cm^3, about 106 cm^3, etc.

[00255] Inserter 2700 generally includes, *e.g.*, a housing 2702 (FIGURES 75-76), sheath 2708 (FIGURES 77-78), and a removable distal cap 2704 for maintaining a sterile environment for the medical device and sharp housed therein (FIGURE 74). As illustrated in FIGURES 75-76, housing 2702 is shown removed from distal cap 2704. Distal cap 2704 is detachably secured to housing 2702, *e.g.*, by use of threads 2706. It is understood that cap may be secured using snap-fit or press-fit configuration. Inserter 2700 may be utilized to advance a medical device into the skin of the subject. Sheath 2708 generally a cavity or open space, within which sharp carrier 2716 and medical device carrier 2730 are moveable. In some embodiments, housing 2702 is advanced relative to sheath 2708 in order to advance the medical device distally and into the skin of the patient.

[00256] Housing 2702 includes sheath guide rail 2710 which interfaces with rail guides 2712 located on sheath 2708 (FIGURE 77), thereby allowing housing 2702 to slidingly move relative to sheath 2708. Housing 2702 may further includes sharp carrier guide rail 2714 which interfaces with rail guides 2718 located on sharp carrier 2716 (FIGURE 70). Sheath 2708, sharp carrier 2716, and housing 2702 may alternatively move relative to one another without the use of guide rails.

[00257] Ledge 2720 and/or ledge 2722 are provided on an interior portion of housing 2702. Ledge 2720 engages sheath 2708 to hold sheath 2708 in a pre-use position prior to insertion of the medical device. Ledge 2722 engages sheath 2708 to secure sheath 2708 in a post-use position after insertion of the medical device. Housing 2702 further includes detent 2724 which prevents housing 2702 from moving relative to sheath 2708 until a minimum force has been applied, e.g., distally by user to housing 2702. In some embodiments, housing 2702 includes insertion hard stop 2724. The sheath 2708 is secured to the housing 2702 via snap 2726. Snap 2726 snaps into the housing detent 2724 (In some embodiments, it is pinched between ledge 2720 and detent 2724, thus controlling its height relative to the housing 2702). The needle carrier 2716 is located and secured to the medical device carrier 2730 (located via interaction of locating features 2748 and 2750 and secured via interaction of carrier arms 2732 and angled top surface of 2716). The insertion hard stop 2724 is a controlled surface onto which the top of sheath surface 2728 will engage at the end of the insertion stroke to prevent further relative movement in some embodiments.

[00258] Further components of inserter 2700 are illustrated in FIGURES 77-82. Sheath 2708 is a generally cylindrical component. As illustrated in FIGURES 77-78, sheath 2708 may include attachment snaps 2726 which are biased into detent 2724 of housing 2702 to create a minimum force that must be overcome in order to advance sharp 224 into the subject's skin and install the sensor housing 122. In some embodiments, the force to be overcome can be about 0.5 lbf to about 5 lbf., e.g., about 1lbf, about 2 lbf, about 3 lbf, about 4 lbf, etc. Support wall 2728 prevents carrier arms 2732 on carrier 2730 from bending outwardly, clear of sharp carrier 2716. Ribs 2734 pinch carrier arms 2732 on carrier 2730, thus preventing sensor housing 122 from falling out of inserter 2700 when sheath 2708 is in the extended position. Ribs 2734 are not

present at the bottom of sheath 2708, thus allowing room for spring arms 2736 on carrier 2730 to release sensor housing 122 when carrier 2730 has traveled to the bottom of sheath 2708. Slot 2738, located on sheath 2708, interfaces with locating feature 2740 on carrier 2730, thus orienting carrier 2730 to sheath 2708 during assembly.

[00259] Referring next to FIGURES 79-80, depicted is sharp carrier 2716 in a perspective and cross-sectional view, respectively. Sharp carrier 2716 contains notches 2724 which allow clearance for the passage of carrier arms 2732 located on medical device carrier 2730. Guidance walls 2744 securely hold spring 2746 in place (FIGURE 83). Locating features 2748, e.g., bosses or tabs, align with locating features 2750, e.g., recesses or apertures, on carrier 2730. Snap features 2752 secure sharp 224 securely within inserter 2700. It is contemplated that sharp 224 may be secured to sharp carrier 2716 by other techniques, e.g., friction fit, adhesive, welding, etc.

[00260] Medical device carrier 2730 is depicted in more detail in FIGURES 81-82. As shown, carrier 2730 contains spring locating ring 2754 which receives one end of spring 2746. In some embodiments, spring 2746 surrounds spring locating ring 2754. In some embodiments, the inner area remains clear to leave room for the deflection of sharp carrier feature snaps 2752 that deflect out when the sharp is inserted. Carrier 2730 further comprises locating features 2756 which interface with locating features on housing 2702.

[00261] Inserter 2700 is illustrated in cross-section in FIGURE 83 in a state prior to use in which housing 2702 is disposed in a proximal position with respect to the sheath 2708. In such orientation, sharp 224 is disposed in a configuration spaced apart from the aperture 420 of the adhesive layer 118. The upper surface of spring 2746 is retained in inserter 2700 by sharp carrier

2716. The bottom surface of spring 2746 is retained by spring location ring 2754. Initially, spring 2746 is in a compressed or semi-compressed state while housing 2702 is disposed proximally from sheath 2708.

[00262] Sharp 224 extends longitudinally from sharp carrier 2716 within inserter 2700. In some embodiments, sharp 224 is supported at an oblique angle, *e.g.*, between and including about 0° and 90° with respect to the skin surface.

[00263] FIGURE 84 illustrates inserter 2700 in cross-section after a user applies an initial downward force to housing 2702. In some embodiments, a predetermined minimum force must be used so that attachment snaps 2726 advance past detent 2724.

[00264] After detent 2724 has been overcome, e.g., snap 2726 is radially displaced, further depression of housing 2702 with respect to sheath 2708 causes distal longitudinal movement of the carrier 2730 and sharp carrier 2716, from a proximal position towards a distal position as shown in FIGURE 85. As sharp 224 is further urged distally, it carries the sensor insertion portion 30 of sensor 14 (FIGURE 23) into the subcutaneous portion of the subject's skin S.

[00265] As carrier 2716 reaches a distal position, the distal surface of the sensor housing 122 engages the upper surface of adhesive pad 118, thereby becoming adhered to the skin surface S of the subject. Concurrently, carrier arms 2732 are advanced distally and clear the support wall 2728. This allows carrier arms 2732 to deflect radially outwardly. When carrier arms 2732 deflect outwardly, shoulder portions of carrier arms 2732 are no longer in an interference relationship with the sharp carrier 2716. Thus spring 2746 is permitted to expand as shown in FIGURE 87, thereby advancing the sharp carrier 2716 to a proximal position and withdrawing the sharp 224 from the skin S of the subject while leaving the sensor housing 122 attached to the

skin. Handle 2702 is maintained in the distal position. Sheath snap 2726 of the sheath 2708 have now moved up to lock over feature 2722 of the housing 2702. Now the housing 2702 and the sheath 2708 can no longer move longitudinally with respect to each other.

[00266] In some embodiments, the changing interaction of sheath snap 2726 with the housing detent/ledges 2720, 2724, and 2722 determine whether the sheath 2708 is locked. When snap 2726 is in the pre-fire position, ledge 2720 prevents sheath 2708 from being pulled out of the housing 2702. In this position, detent 2724 may also impede the movement of pushing the sheath 2708 into the housing 2702. When the detent is overcome by a at least at minimum force, the sheath 2704 moves longitudinally with respect to the housing 2702 until the snap 2726 snaps over housing ledge 2722. At this point, ledge 2722 prevents the sheath 2708 from being pulled out of the housing again, but from a new position (this position may be referred to as the used/post-fire position). Sharp carrier snap 2752 function is to hold onto the sharp/needle. in some embodiments, the sharp/needle carrier 2716 is held in the post-fire position relative to the housing 2702 by, e.g., an interference between the rails of the housing 2714 and the guide rails of the sharp carrier 2718 (this interference is only present once the sharp carrier is fully retracted) and/or by medical device carrier projections 2732 interfering with the bottom/floor of the sharp carrier (See, e.g., FIG. 88).In another embodiment of inserter 2700, adhesive pad 118 may be attached directly to sensor housing 122. This necessitates a different shape of inserter 2700 as depicted in FIGURE 89. Additionally, carrier 2630 is slightly wider to accommodate adhesive pad 118 attached to sensor housing 122 (FIGURE 90).

[00267] It is understood that the subject matter described herein is not limited to particular embodiments described, as such may, of course, vary. It is also understood that the terminology

used herein is for the purpose of describing particular embodiments only, and is not intended to be limiting, since the scope of the present subject matter is limited only by the appended claims.

[00268] Additional detailed description of embodiments of the disclosed subject matter is provided in but not limited to: U.S. Patent No. 7,381,184; U.S. Patent No. 7,299,082; U.S. Patent No. 7,167,818; U.S. Patent No. 7,041,468; U.S. Patent No. 6,942,518; U.S. Patent No. 6,893,545; U.S. Patent No. 6,881,551; U.S. Patent No. 6,773,671; U.S. Patent No. 6,764,581; U.S. Patent No. 6,749,740; U.S. Patent No. 6,746,582; U.S. Patent No. 6,736,957; U.S. Patent No. 6,730,200; U.S. Patent No. 6,676,816; U.S. Patent No. 6,618,934; U.S. Patent No. 6,616,819; U.S. Patent No. 6,600,997; U.S. Patent No. 6,592,745; U.S. Patent No. 6,591,125; U.S. Patent No. 6,560,471; U.S. Patent No. 6,540,891; U.S. Patent No. 6,514,718; U.S. Patent No. 6,514,460; U.S. Patent No. 6,503,381; U.S. Patent No. 6,461,496; U.S. Patent No. 6,377,894; U.S. Patent No. 6,338,790; U.S. Patent No. 6,299,757; U.S. Patent No. 6,284,478; U.S. Patent No. 6,270,455; U.S. Patent No. 6,175,752; U.S. Patent No. 6,161,095; U.S. Patent No. 6,144,837; U.S. Patent No. 6,143,164; U.S. Patent No. 6,134,461;U.S. Patent No. 6,121,009; U.S. Patent No. 6,120,676; U.S. Patent No. 6,071,391; U.S. Patent No. 5,918,603; U.S. Patent No. 5,899,855; U.S. Patent No. 5,822,715; U.S. Patent No. 5,820,551; U.S. Patent No. 5,628,890; U.S. Patent No. 5,601,435; U.S. Patent No. 5,593,852; U.S. Patent No. 5,509,410; U.S. Patent No. 5,320,715; U.S. Patent No. 5,264,014; U.S. Patent No. 5,262,305; U.S. Patent No. 5,262,035; U.S. Patent No. 4,711,245; U.S. Patent No. 4,545,382; U.S. Patent Publication No. 2004/0186365, published September 23, 2004; U.S. Patent Application No. 61/238,646, filed August 31, 2009; U.S. Patent Application No. 12/698,129, filed February 1, 2010; U.S. Patent Application No. 61/317,243, filed March 24, 2010; U.S. Patent Application No. 61/345,562, filed May 17, 2010; and International Application No. PCT/US10/22860, filed

February 22, 2010, the disclosures of each of which is incorporated by reference herein for all purposes.

CLAIMS

WHAT IS CLAIMED IS:

1. An apparatus for inserting a medical device into the skin of a subject, which comprises:

a sheath defining a distal surface for placement on the skin of the subject;

a device support movable between a proximal and distal position, and adapted to support the medical device;

a sharp support movable between a proximal and a distal position, and adapted to support a sharp extending through a portion of said device support;

a handle movable between a proximal position and a distal position relative to the sheath and adapted to urge the device support and the sharp support from a proximal to a distal position to insert the sharp into the skin of the subject; and

a driver for advancing the sharp support towards the proximal position when the sharp support reaches the distal position.

2. The apparatus of claim 1, wherein the driver comprises a compression spring.

3. The apparatus of claim 2, wherein the handle is maintained in a distal position when the sharp support is advanced to the proximal position.

4. The apparatus of claim 1, wherein the handle is at least partially disposed surrounding the sheath.

5. The apparatus of claim 1, wherein the medical device is an analyte sensor.

6. The apparatus of claim 1, wherein the medical device is a glucose sensor.

7. The apparatus of claim 1, wherein the medical device is an infusion set.

8. The apparatus of claim 1, wherein at least one of the handle and the sheath comprises a detent.

9. The apparatus of claim 8 wherein the detent is configured such that advancing the handle distally further requires application of a minimum force to overcome the detent to allow distal movement of the handle relative to the detent.

10. A method for using a medical device comprising:

providing an apparatus comprising a sheath defining a distal surface, a device support adapted to support the medical device and movable between a proximal and distal position, a sharp support adapted to support a sharp extending through a portion of said device support and movable between a proximal and a distal position, a handle movable between a proximal position and a distal position relative to the sheath, and a driver for advancing the sharp support towards the proximal position when the sharp support reaches the distal position;

disposing the distal surface of the sheath on the skin of the subject; and

advancing the handle distally, thereby urging the device support and the sharp support from a proximal to a distal position to insert the sharp into the skin of the subject; and releasing the driver to advance the sharp support towards the proximal position when the sharp support reaches the distal position.

11. The method of claim 10 further comprising providing a detent on at least one of the handle and the sheath.

12. The method of claim 11, wherein the advancing the handle distally further comprises applying a minimum force to overcome the detent to allow distal movement of the handle relative to the detent.

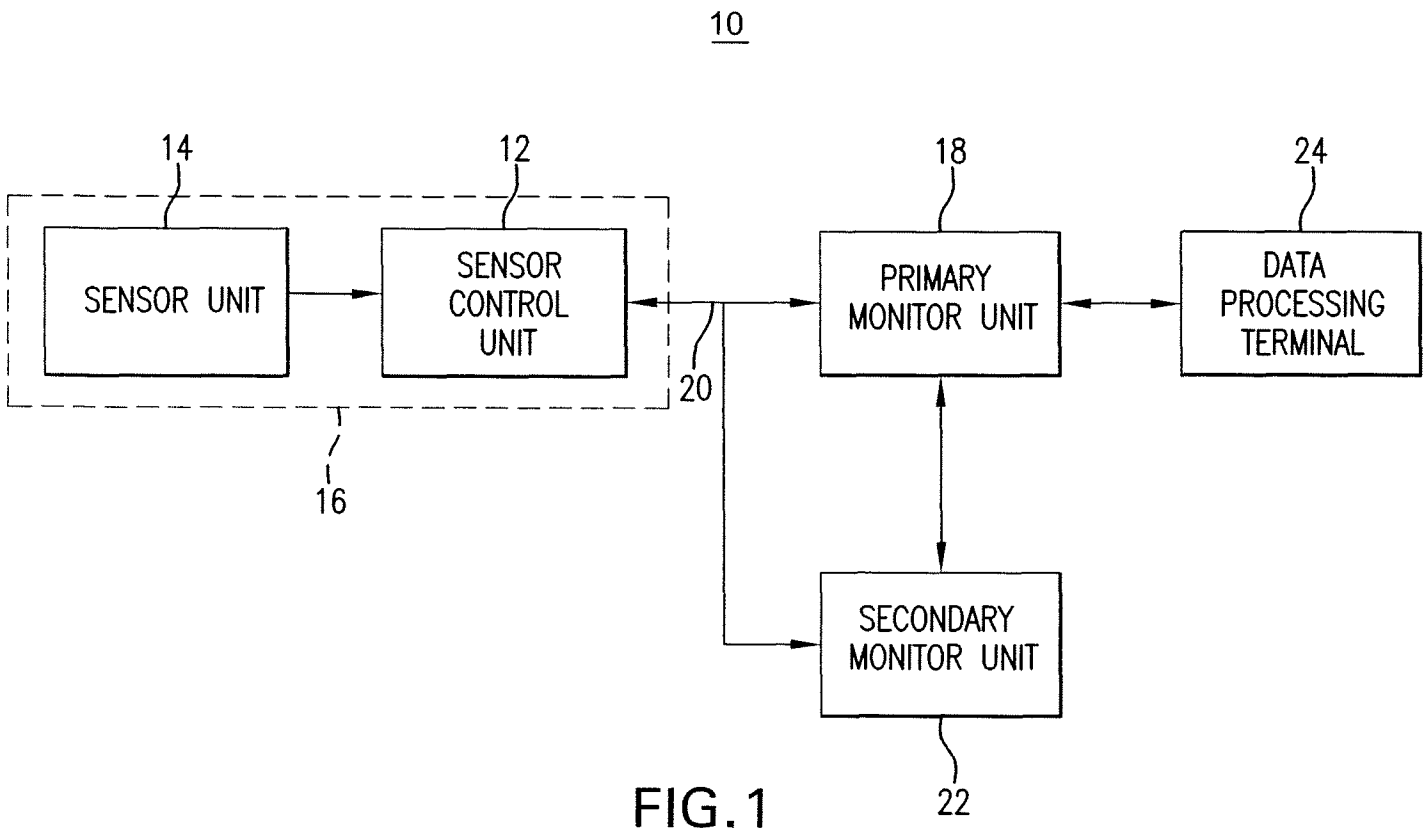
10
14
12
18
24
SENSOR UNIT
SENSOR CONTROL UNIT
PRIMARY MONITOR UNIT
DATA PROCESSING TERMINAL
20
16
SECONDARY MONITOR UNIT
22

FIG. 1

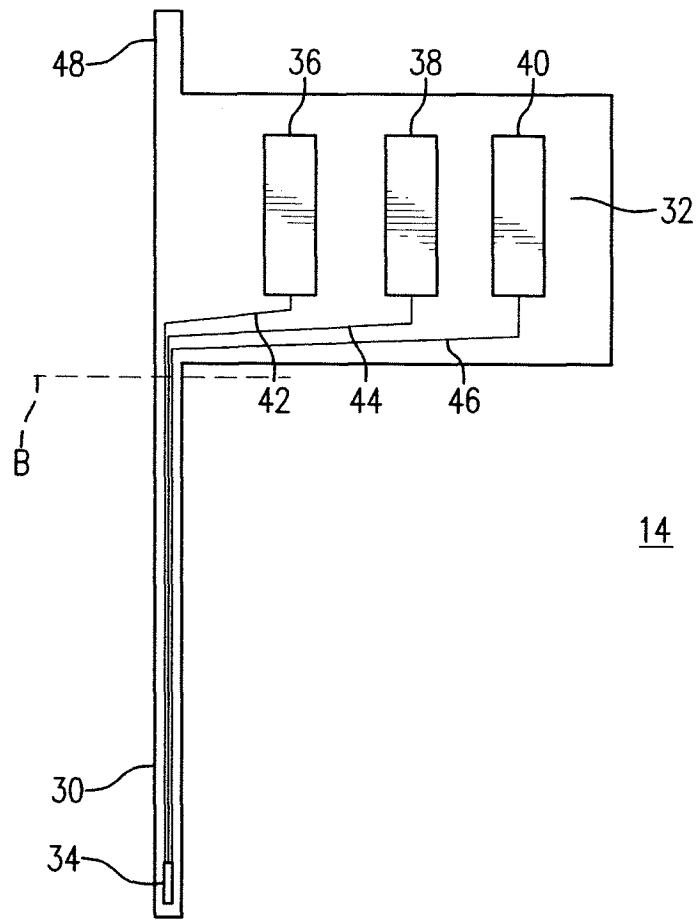

FIG.2

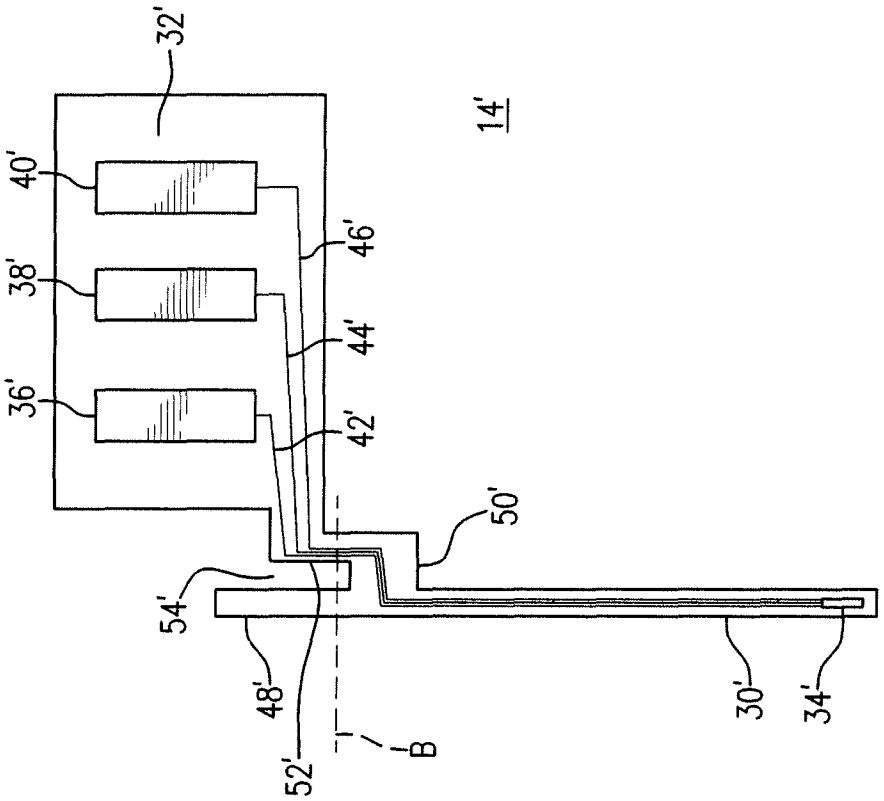

FIG.3

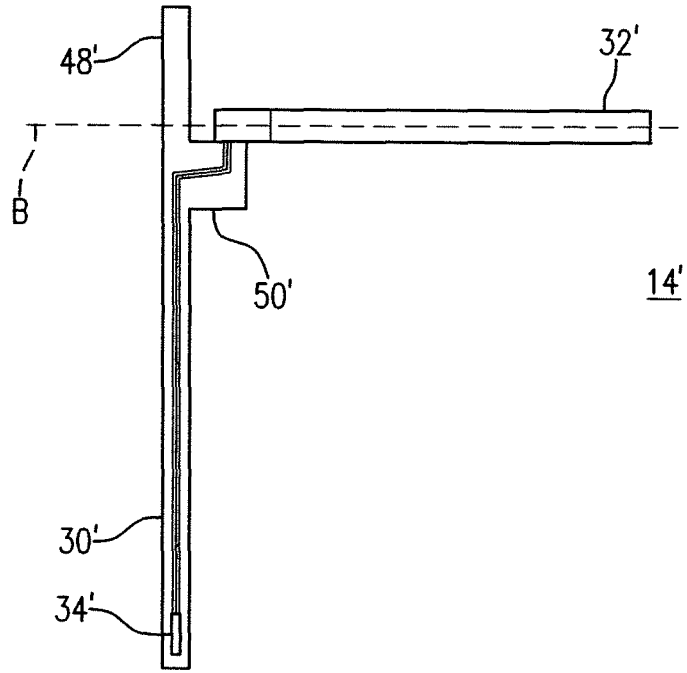

FIG.4

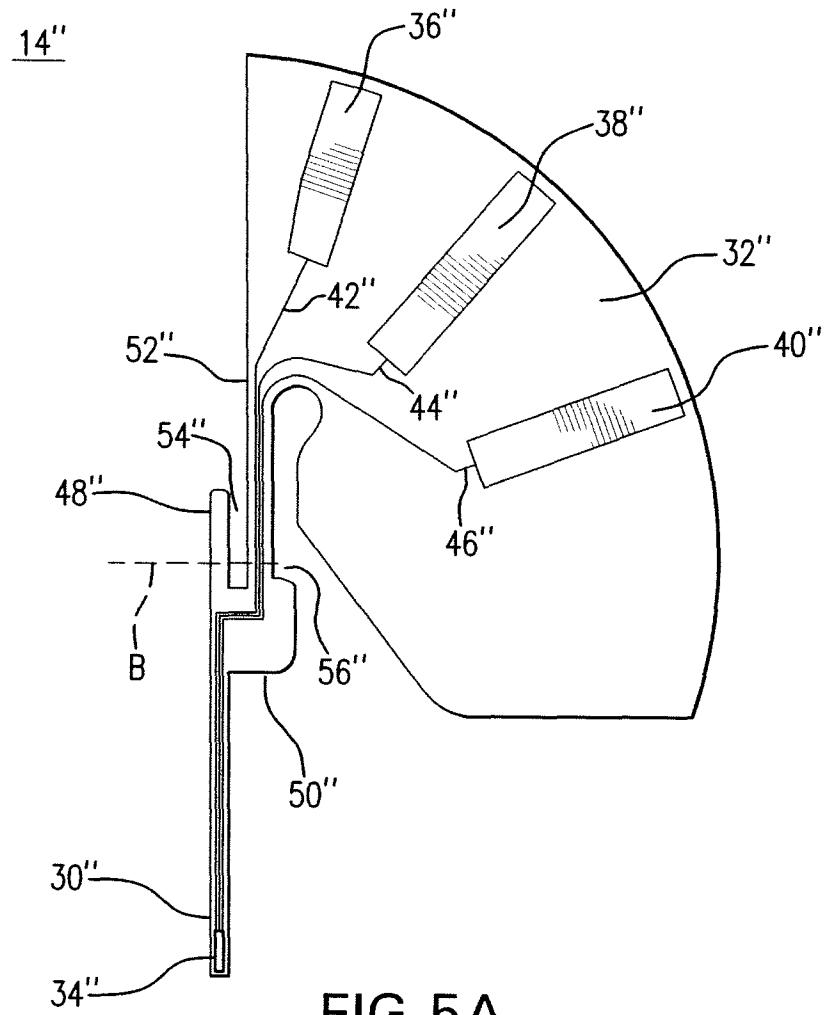

FIG.5A

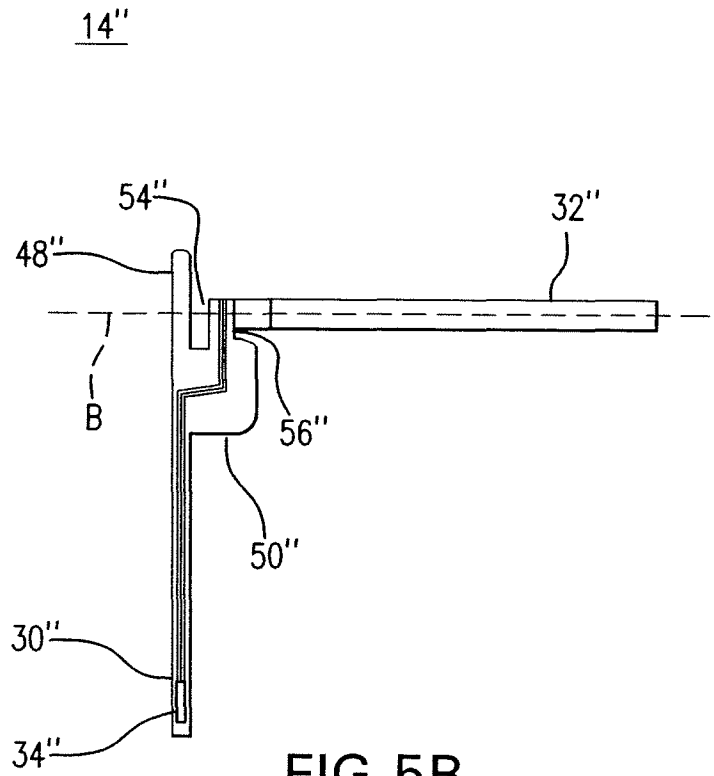

FIG.5B

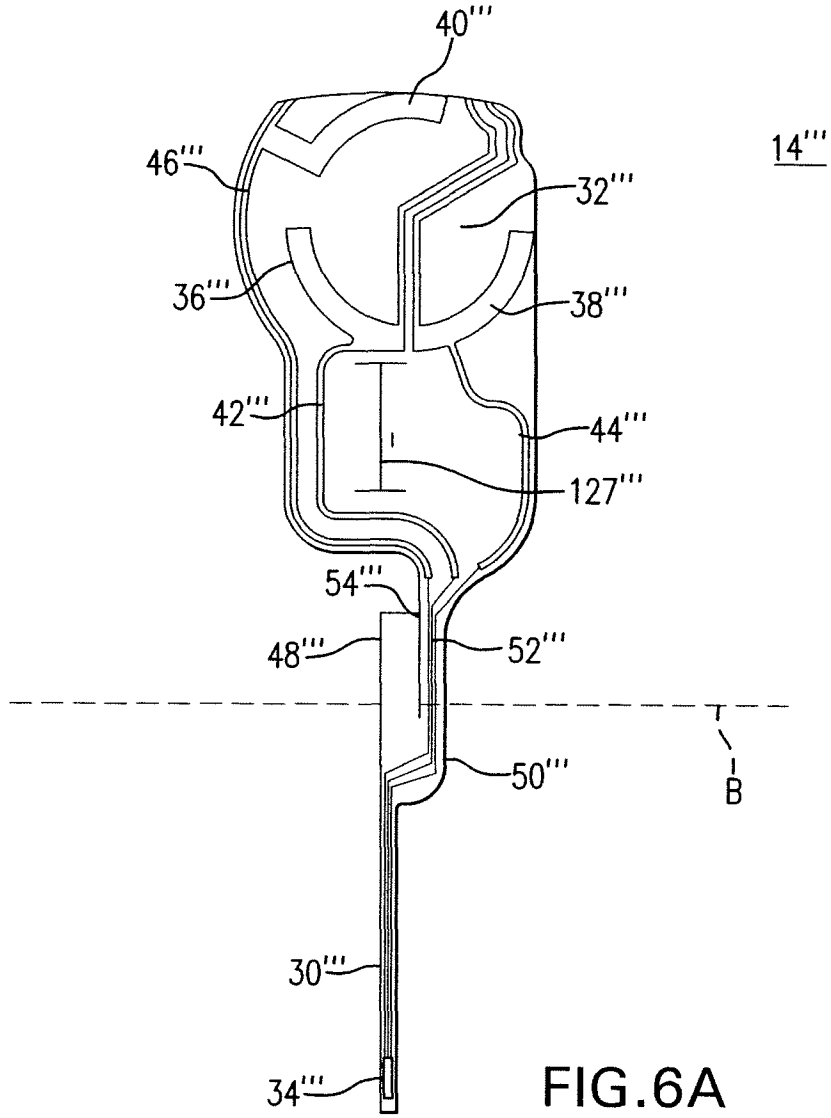

FIG.6A

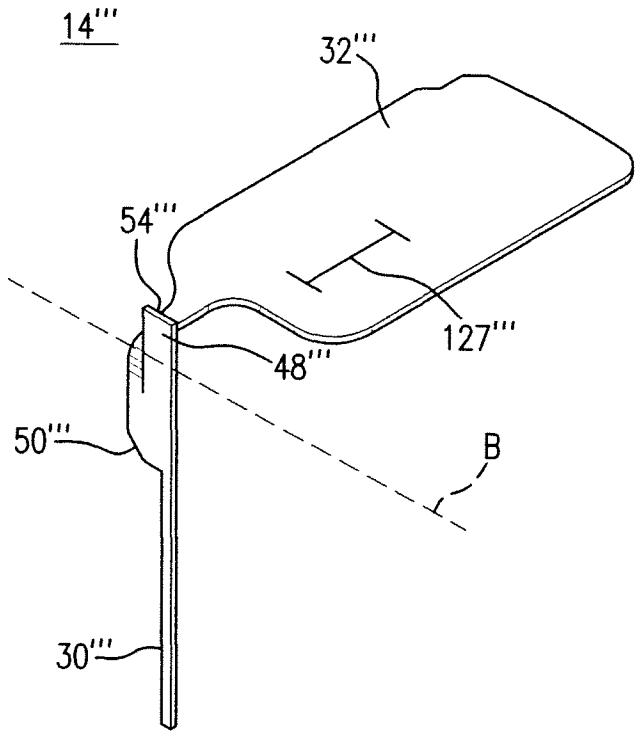

FIG.6B

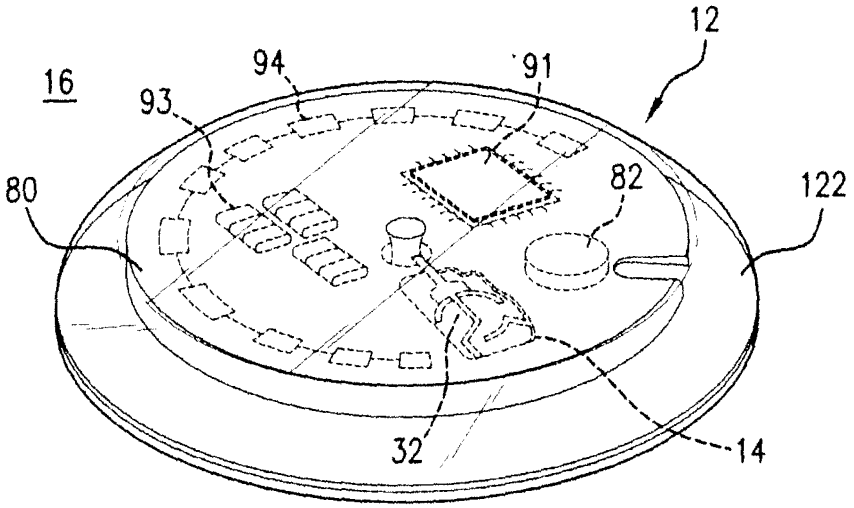

FIG.7

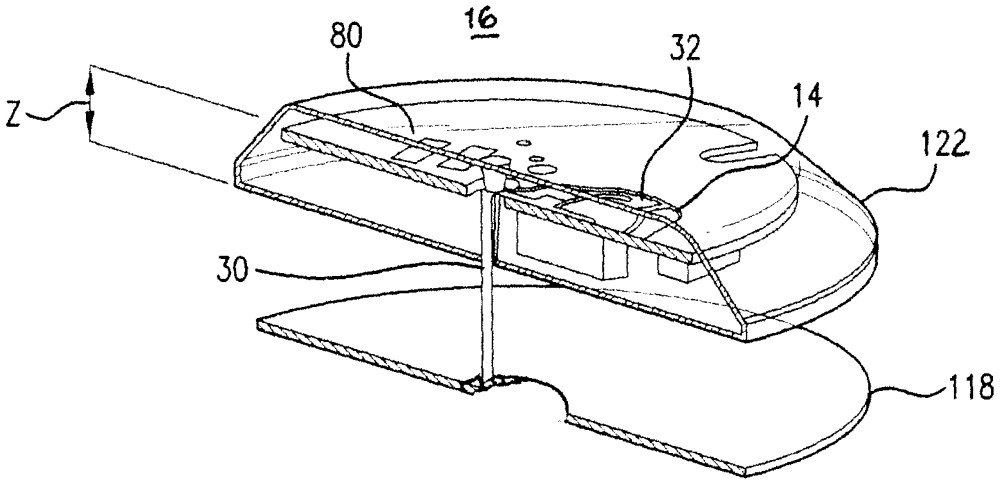

FIG.8

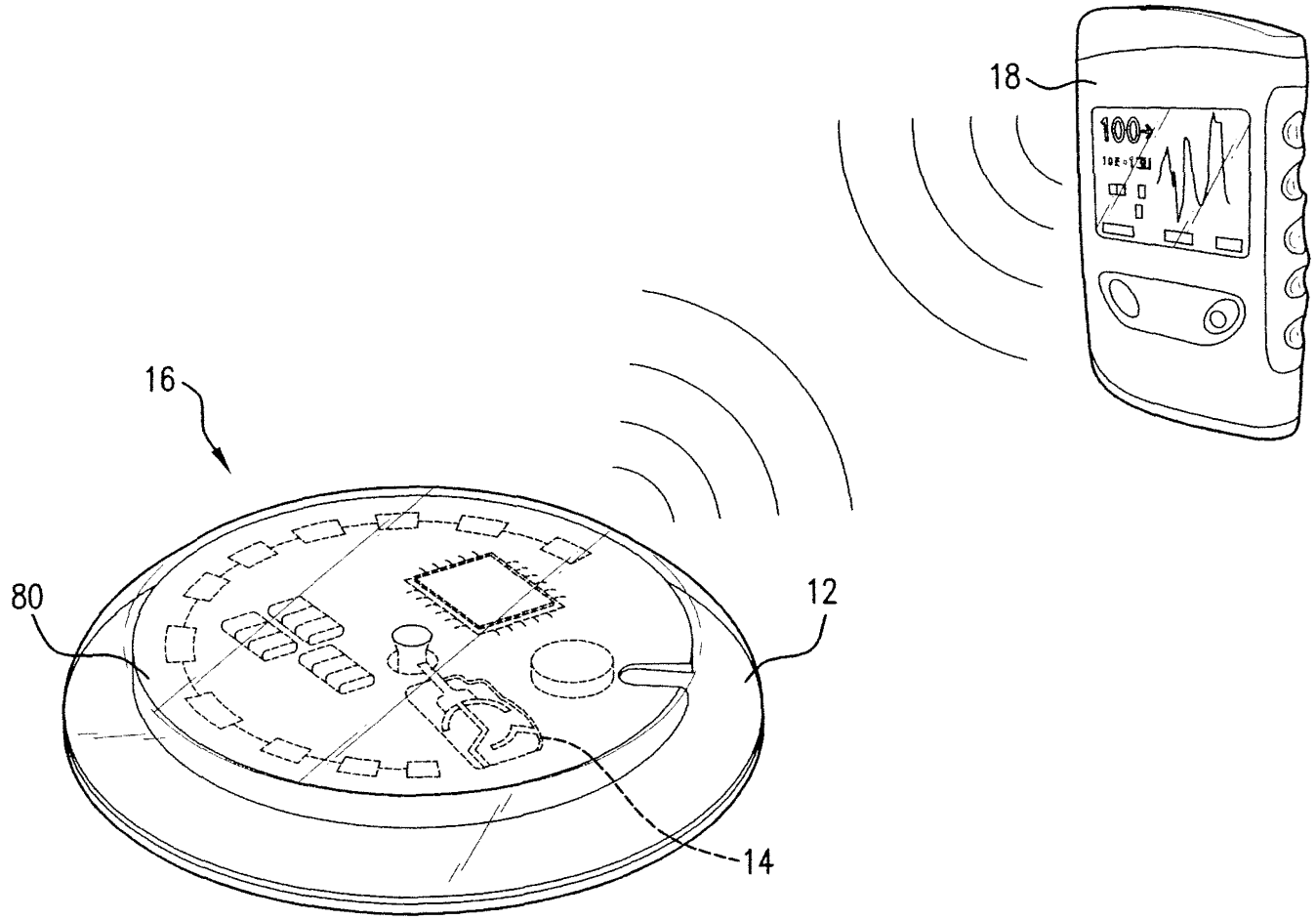

FIG.9

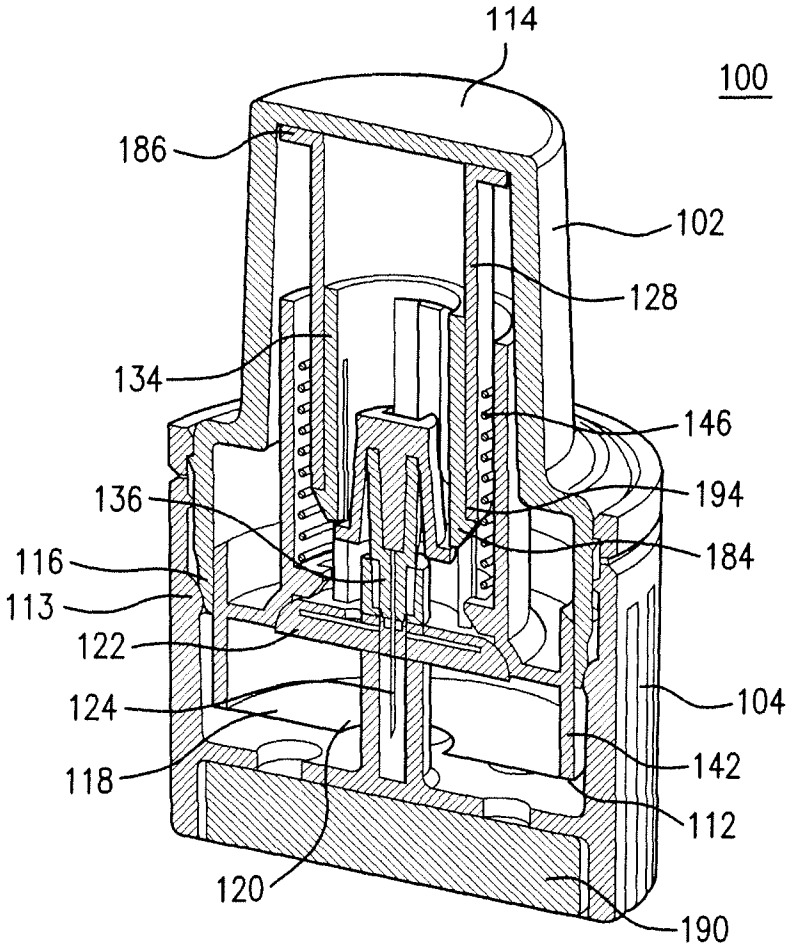
114
100
186
102
128
134
146
136
194
116
184
113
122
124
104
118
142
112
120
190

FIG.10

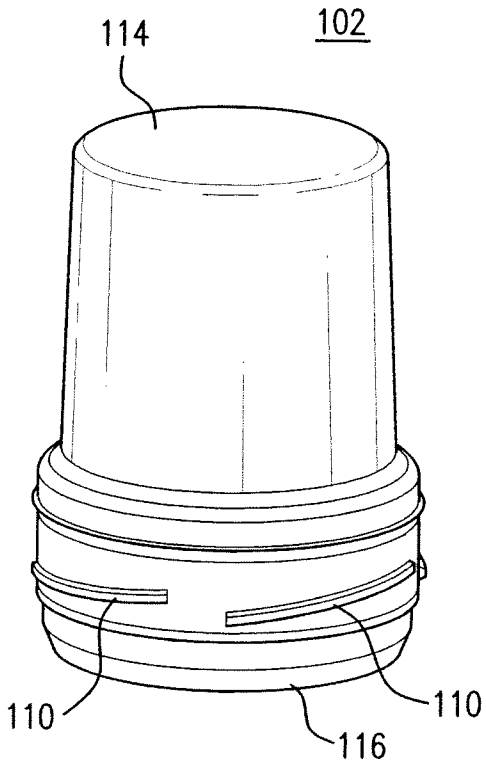

FIG.11

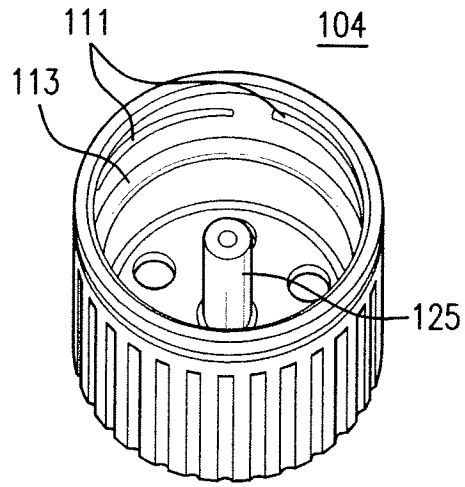

FIG.12

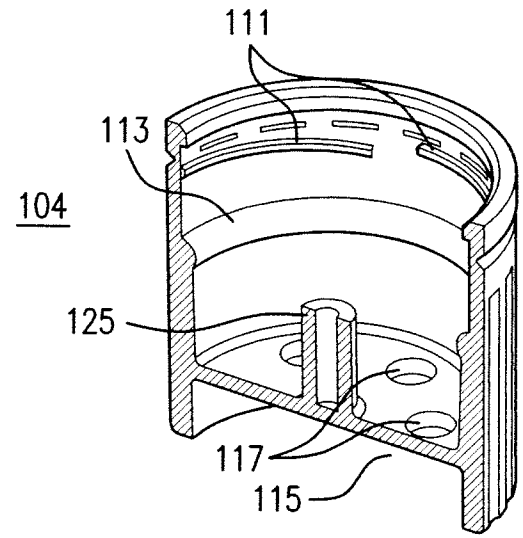

FIG.13

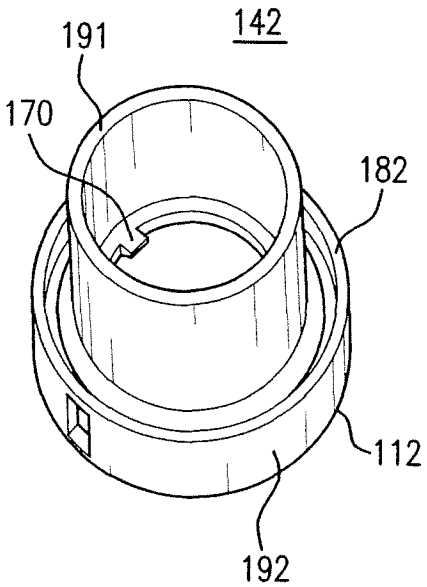

FIG.14

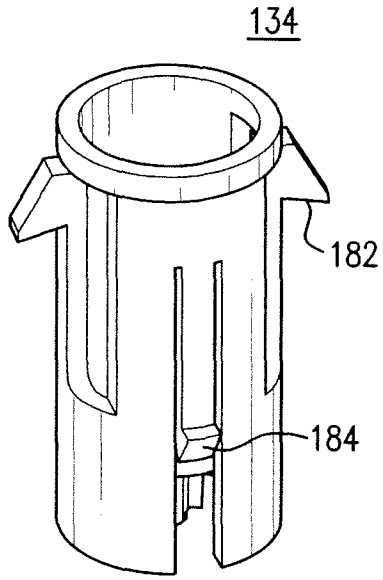

FIG.15

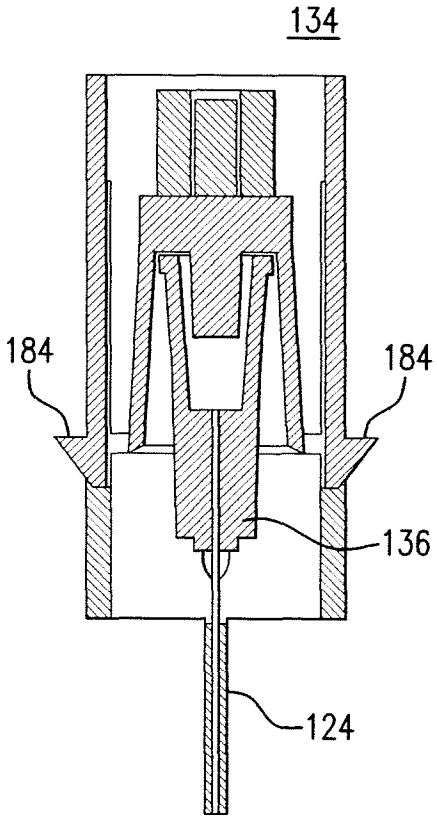

FIG.16

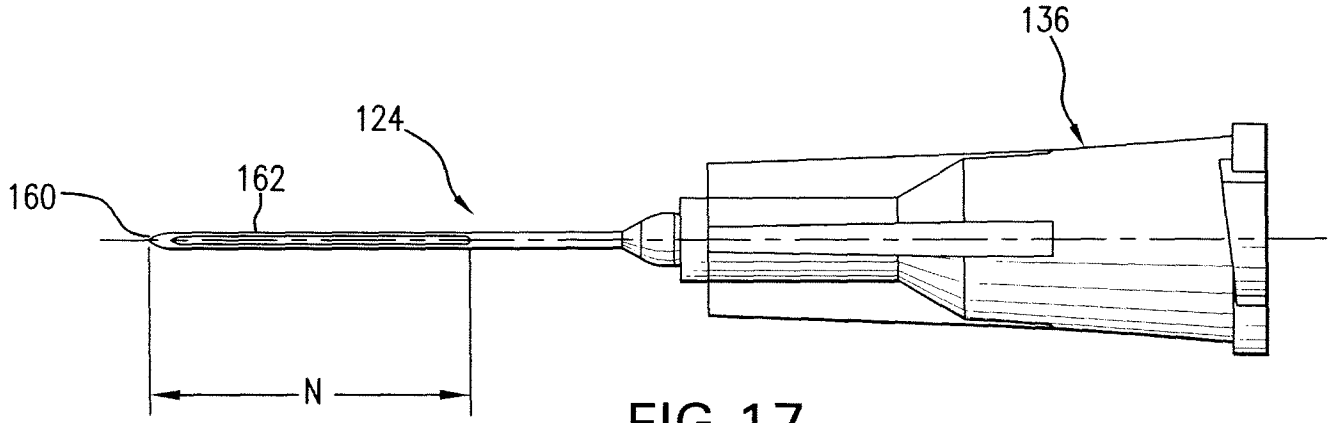

FIG.17

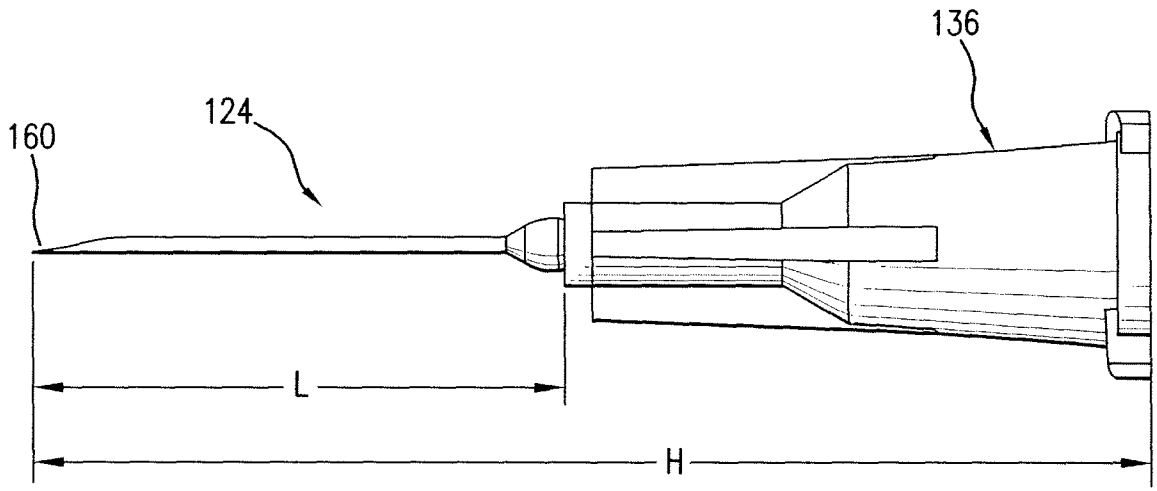

FIG.18

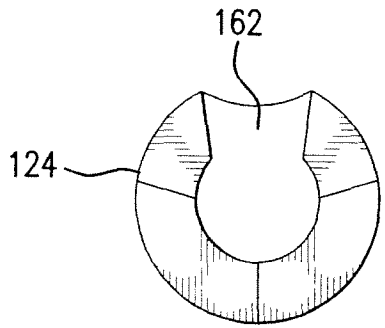

FIG.19

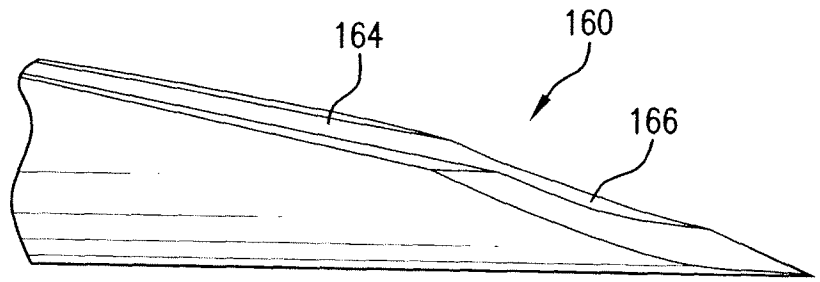

FIG.20

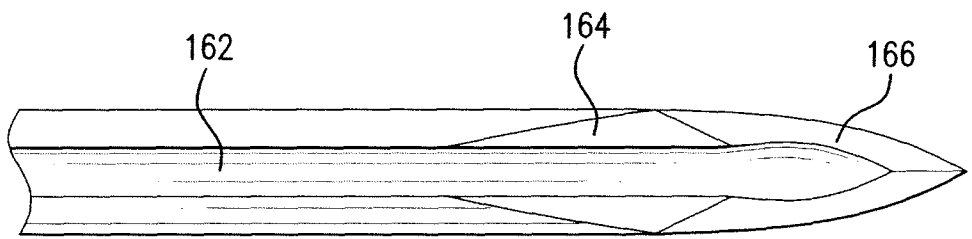

FIG.21

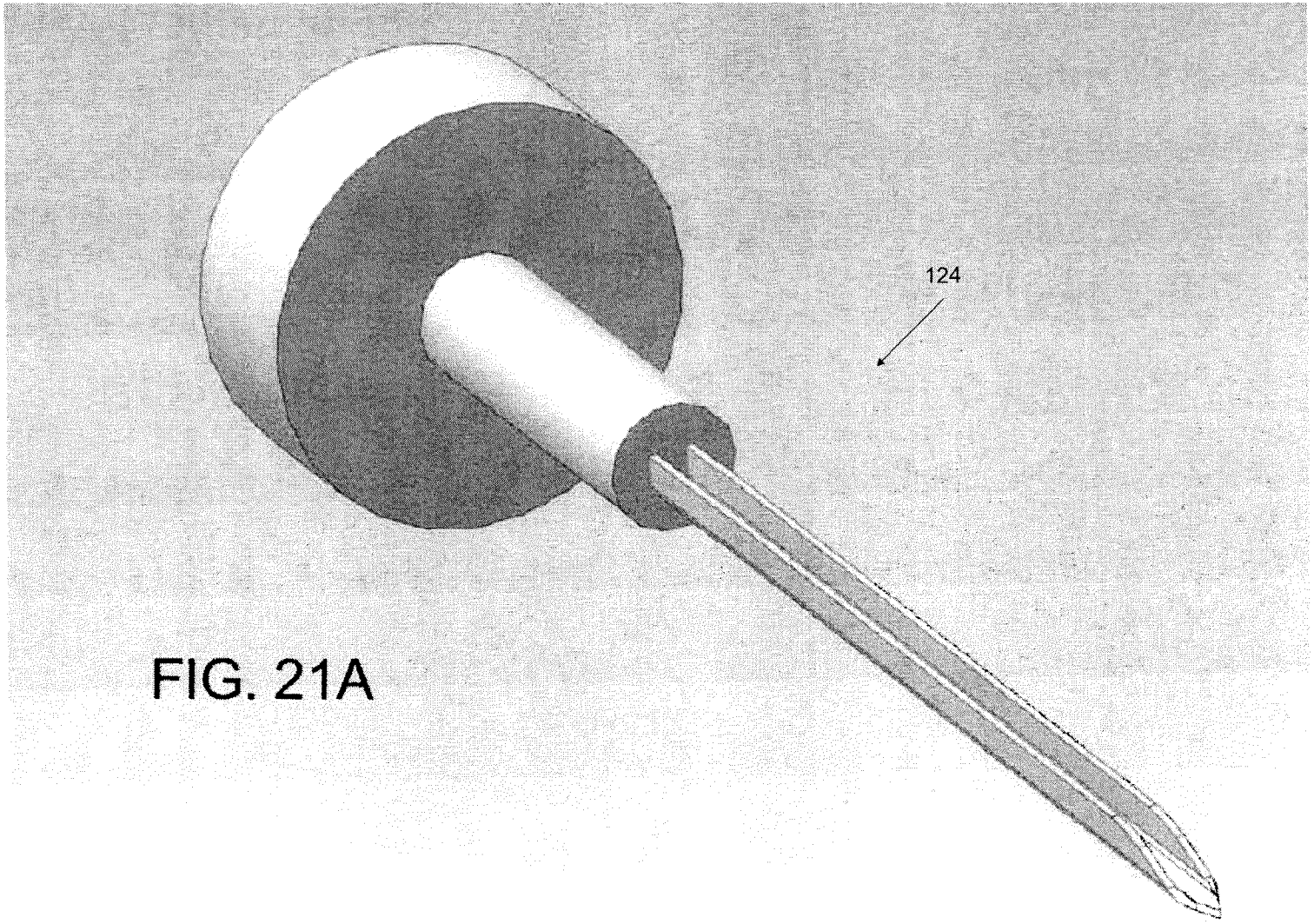

FIG. 21A

FIG. 21B

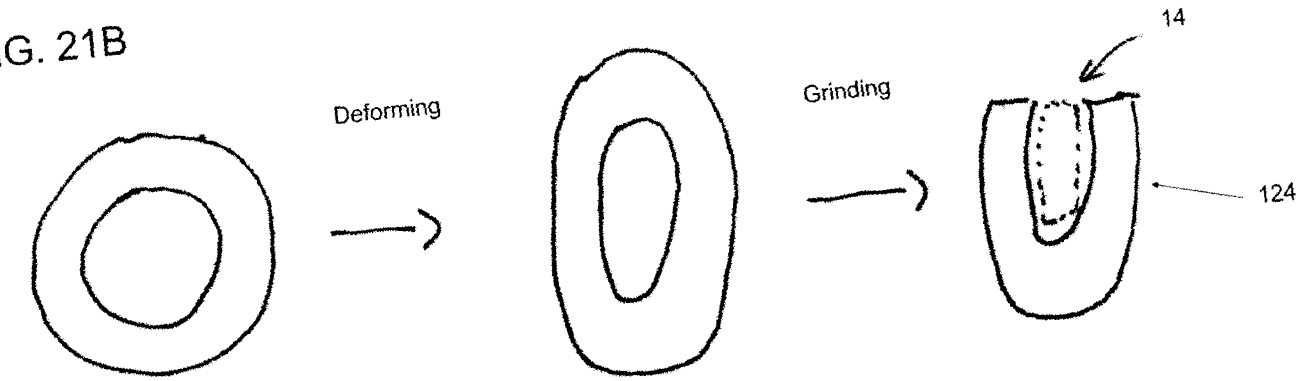

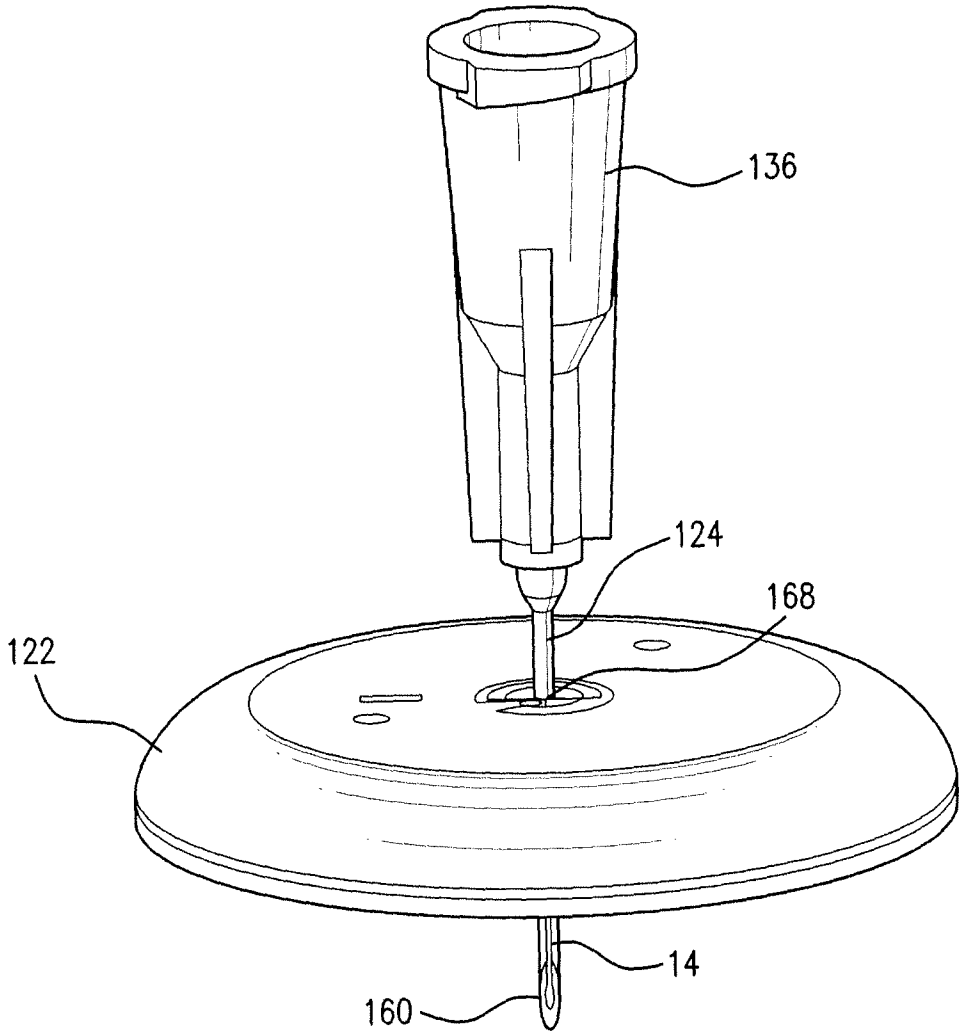

FIG.22

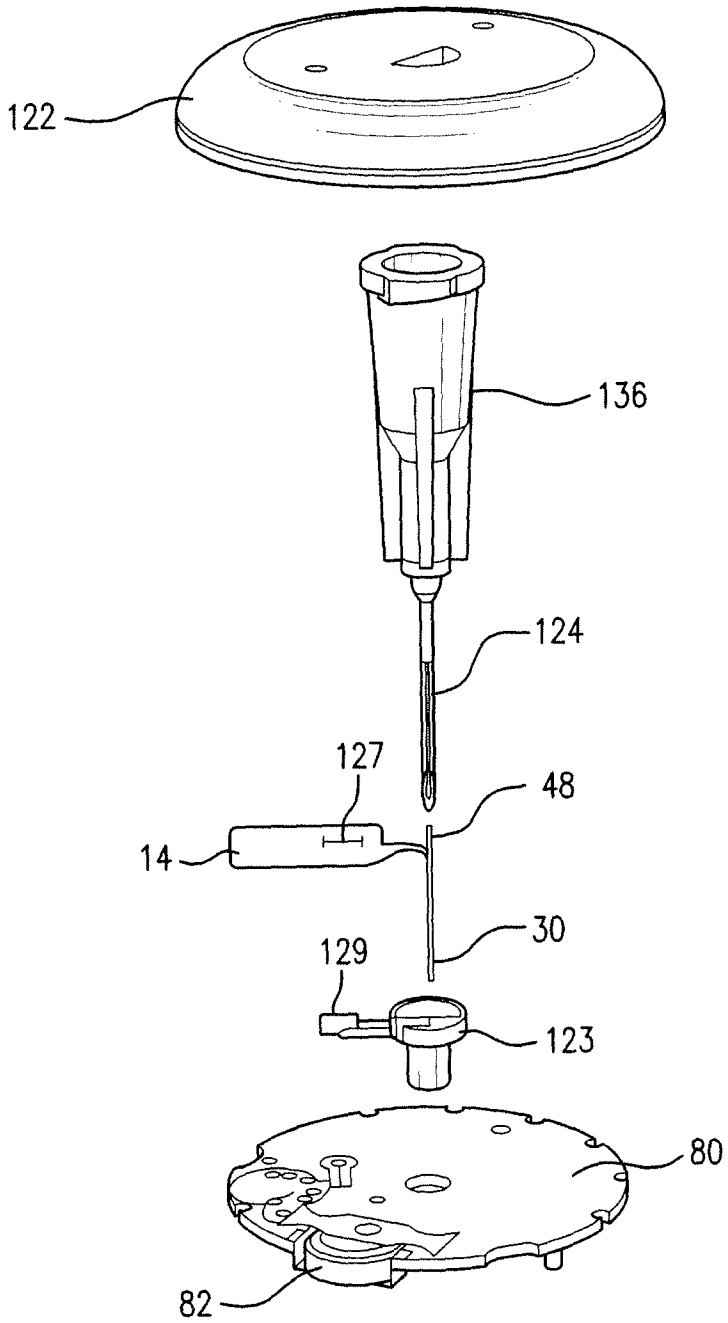

FIG.23

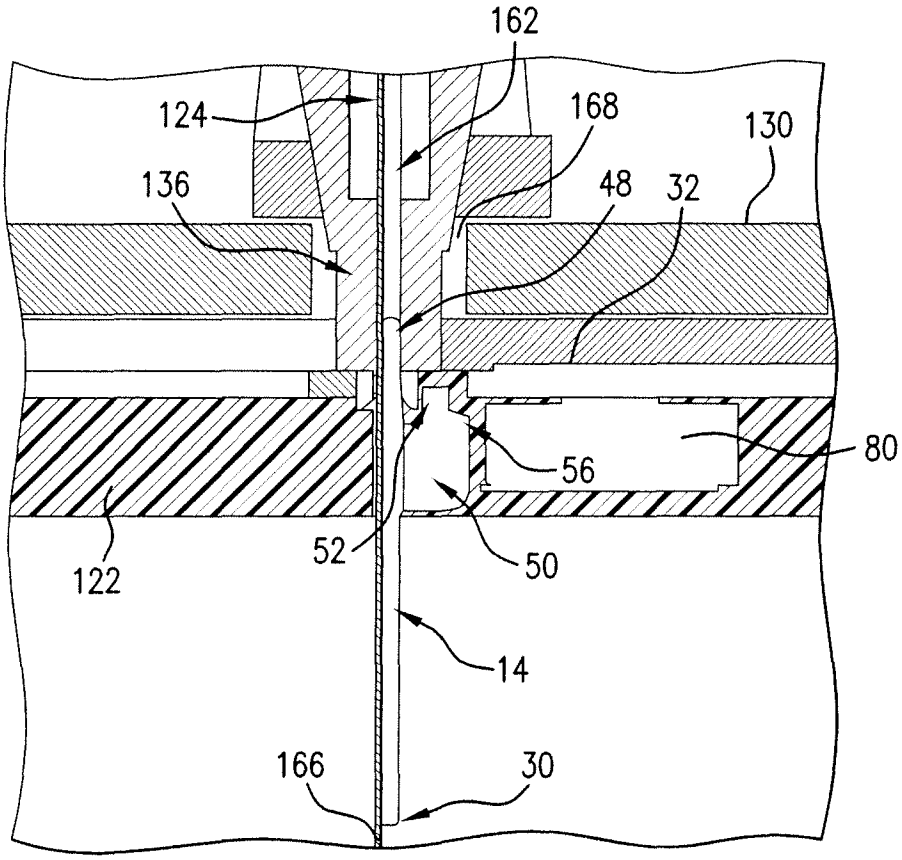

FIG.24

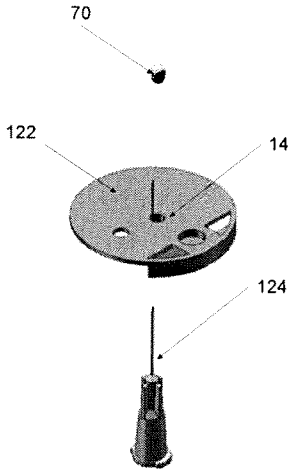

FIGURE 24A

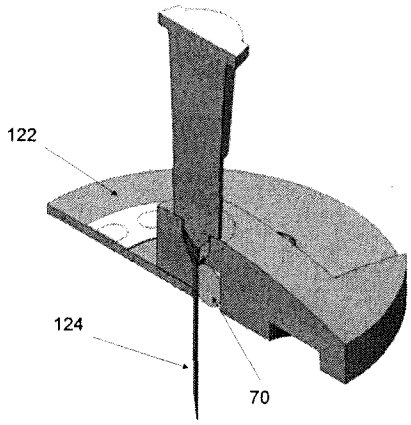

FIGURE 24B

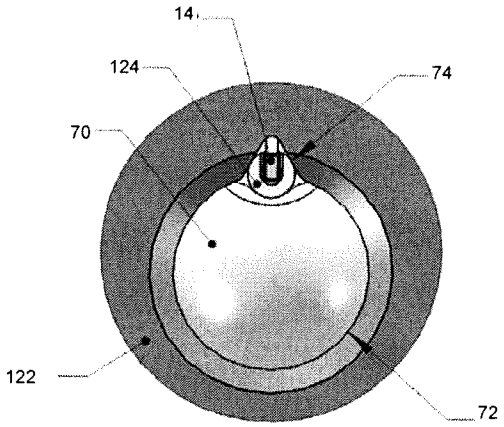

FIGURE 24C

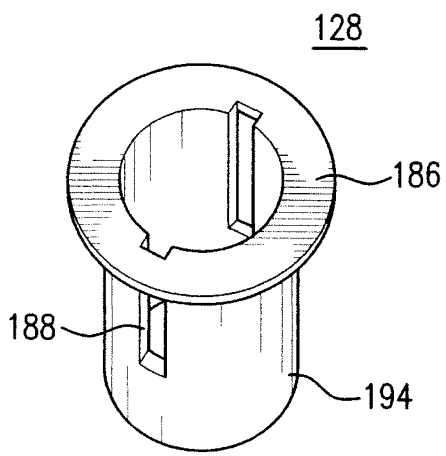

FIG.25

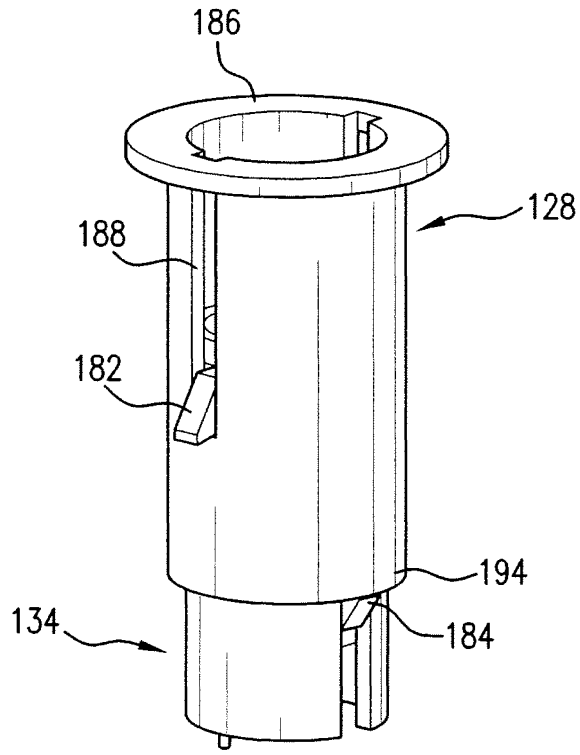

FIG.26

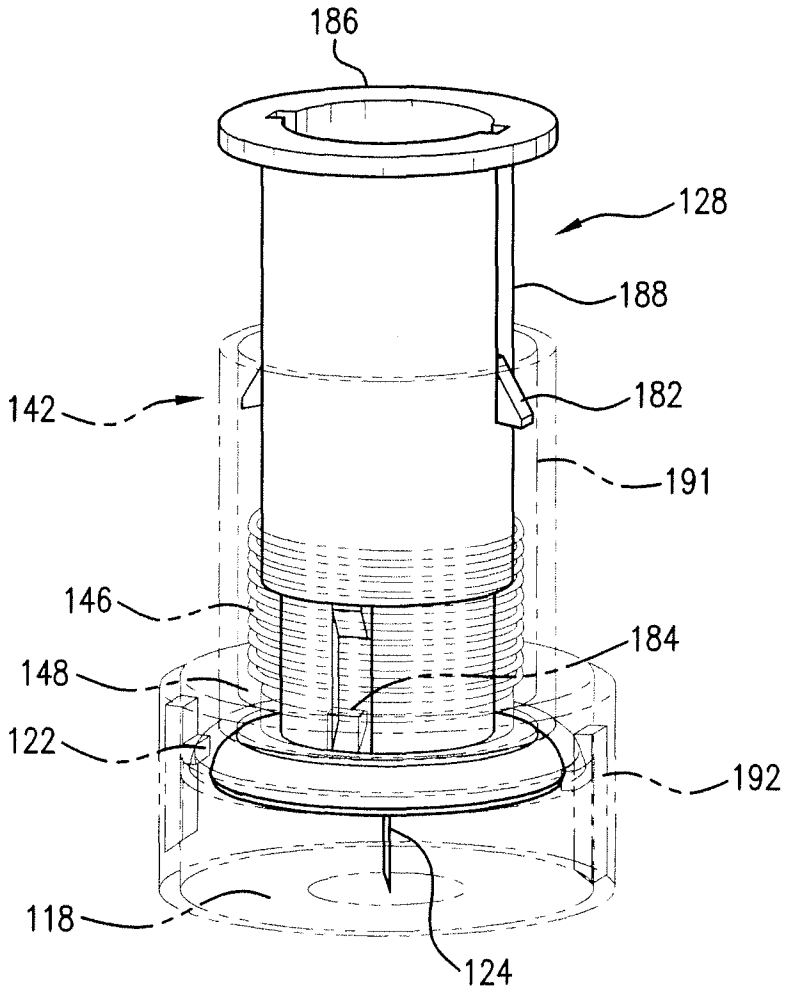

FIG.27

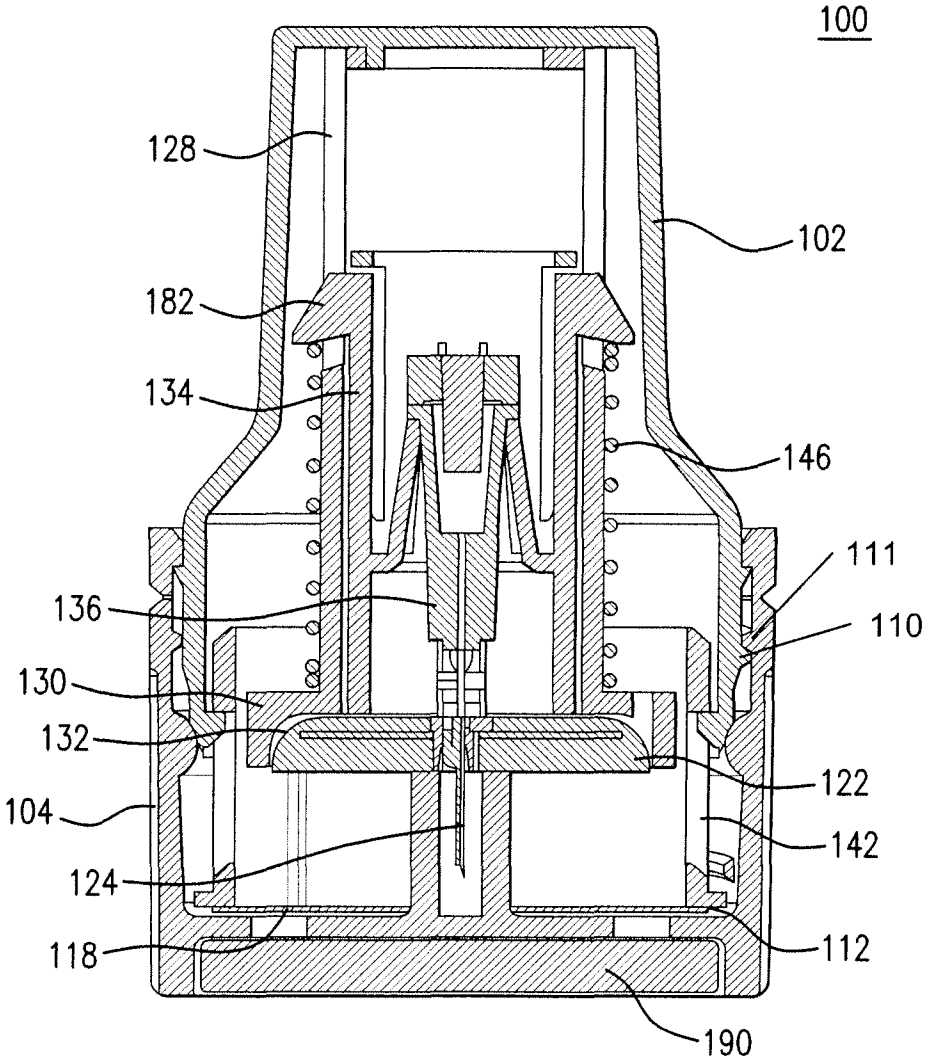
100
128
102
182
134
146
111
136
110
130
132
122
104
142
124
118
112
190

FIG.28

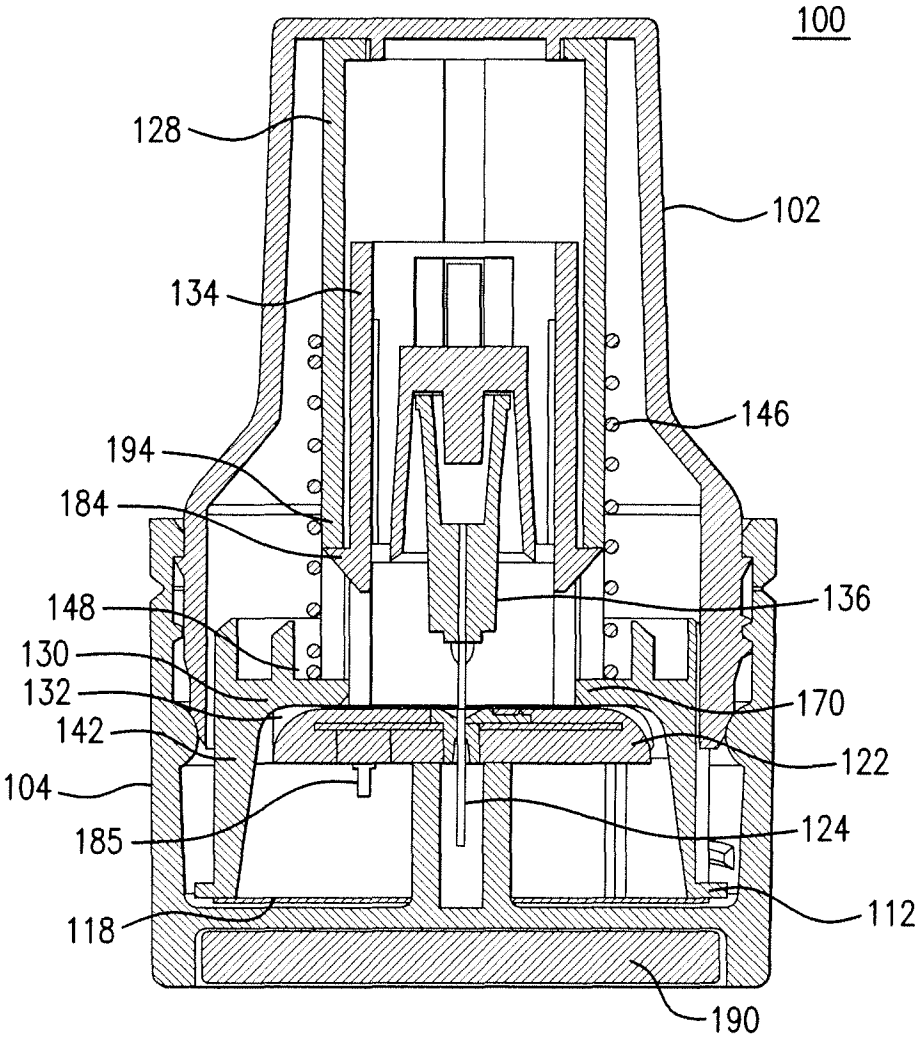
100
128
102
134
146
194
184
136
148
130
132
170
142
122
104
124
185
112
118
190

FIG.29

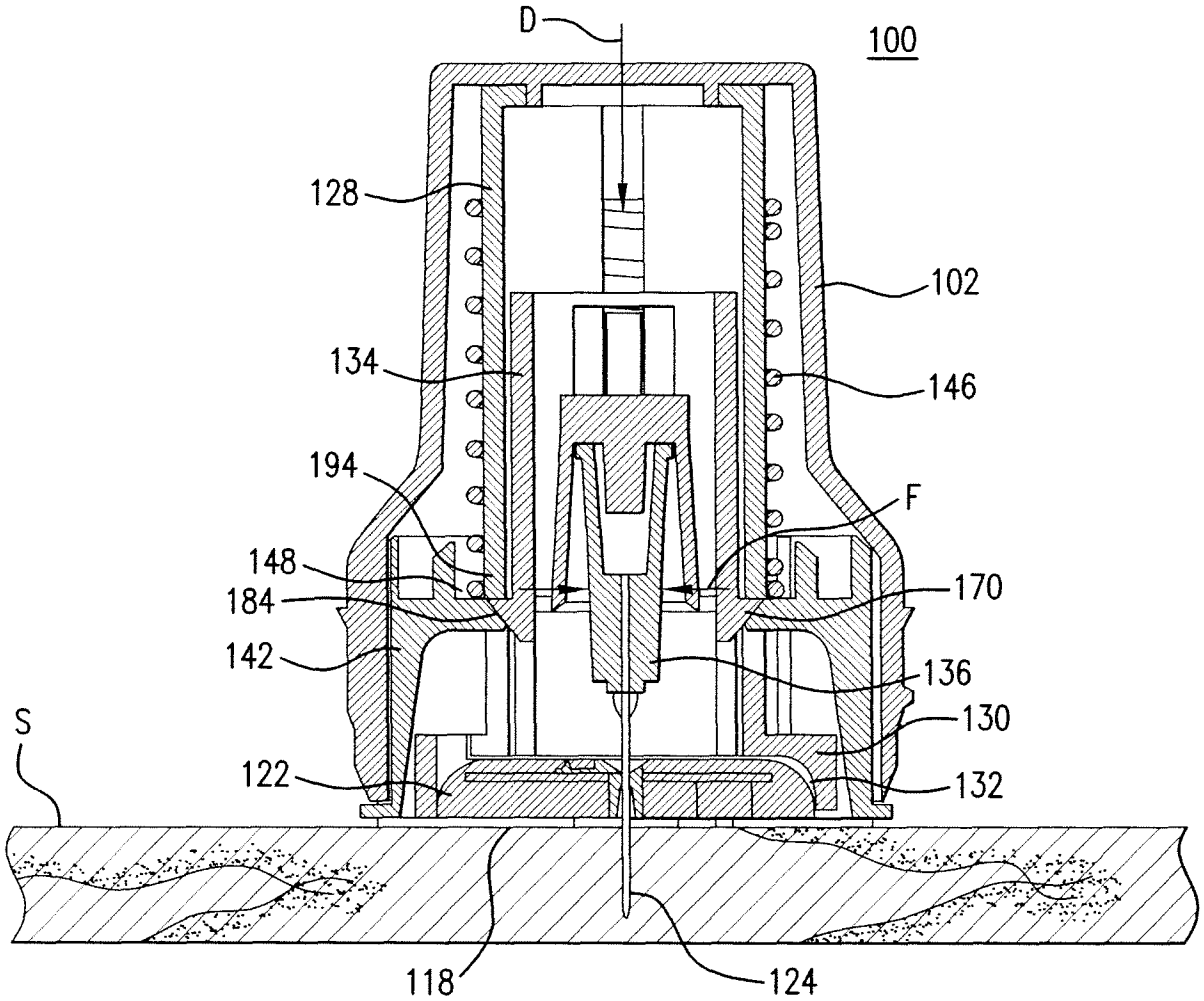
D
100
128
102
134
146
194
F
148
184
170
142
136
S
130
122
132
118
124

FIG.30

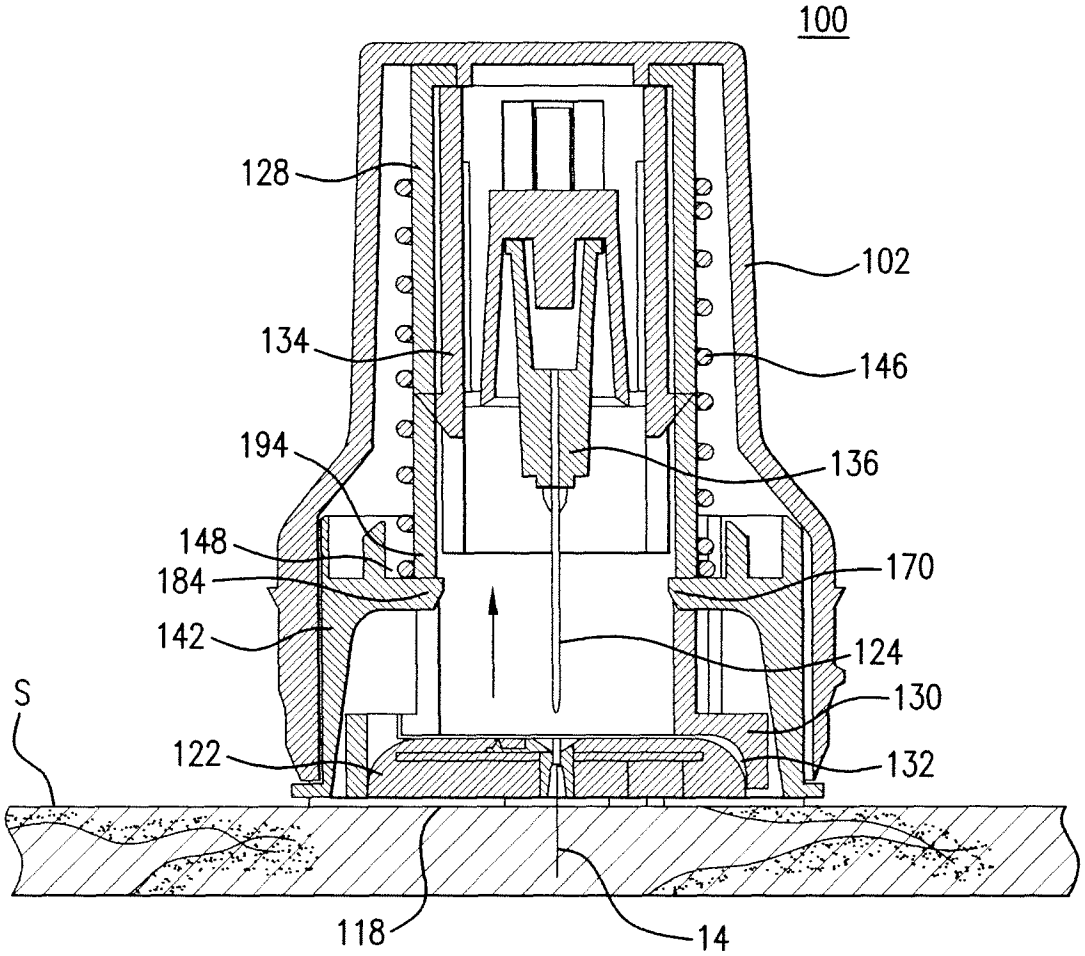
100
128
102
134
146
194
136
148
170
184
142
124
S
130
122
132
118
14

FIG.31

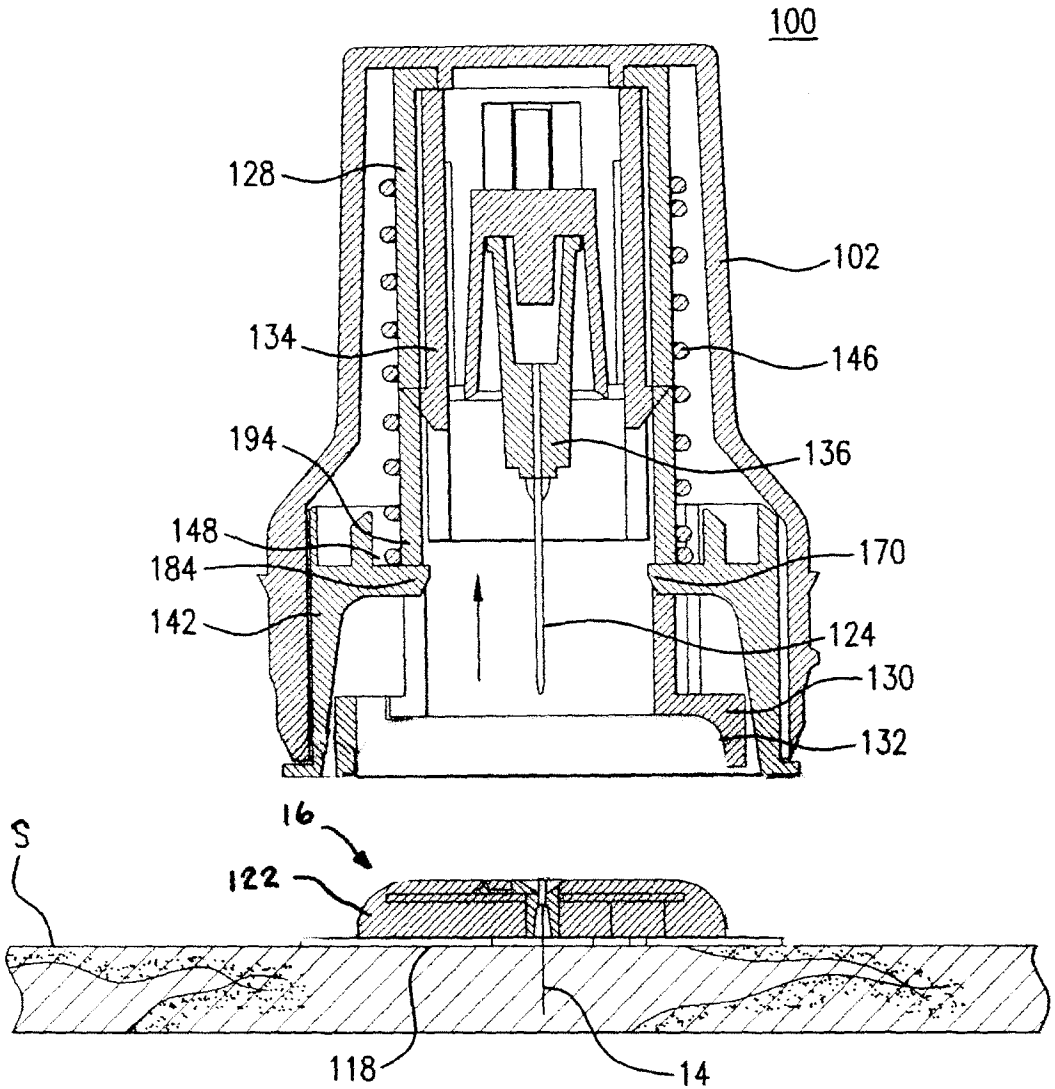
100
128
102
134
146
194
136
148
170
184
142
124
130
132
16
S
122
118
14

FIG.31A

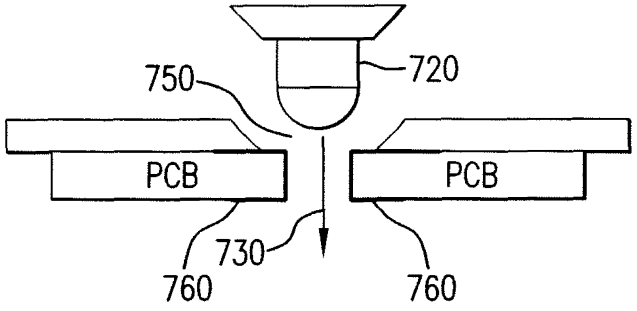

FIG.32

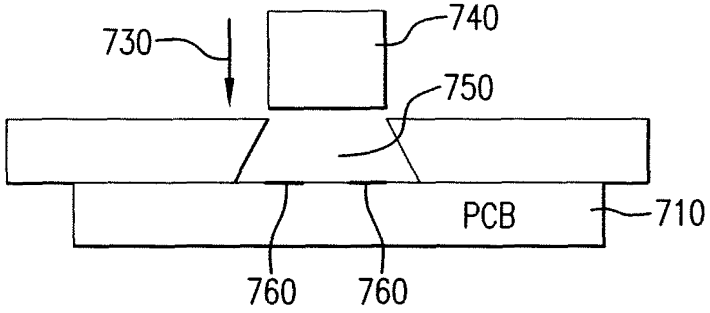

FIG.33

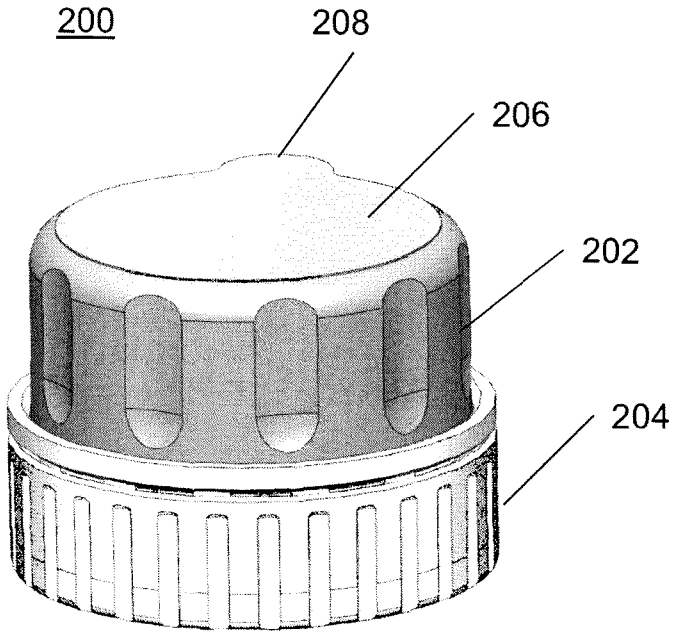

FIGURE 34

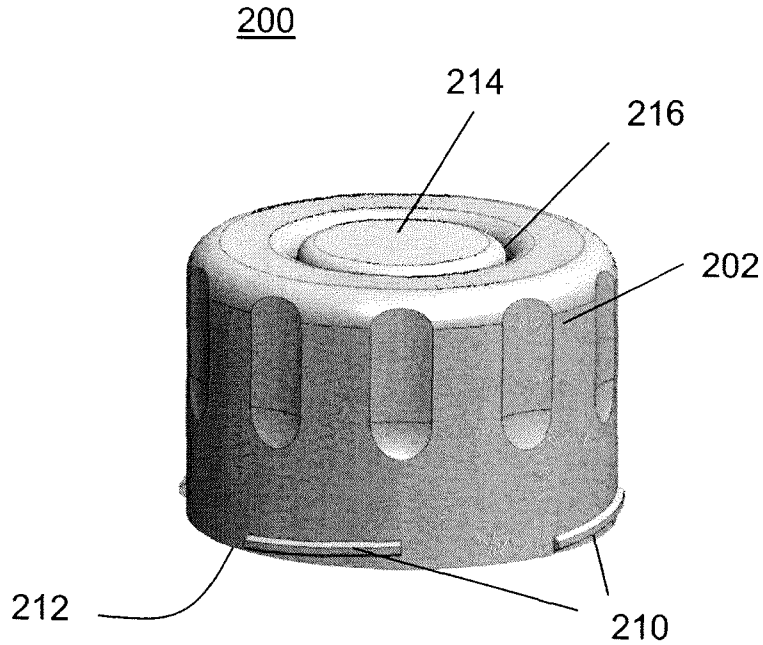

FIGURE 35

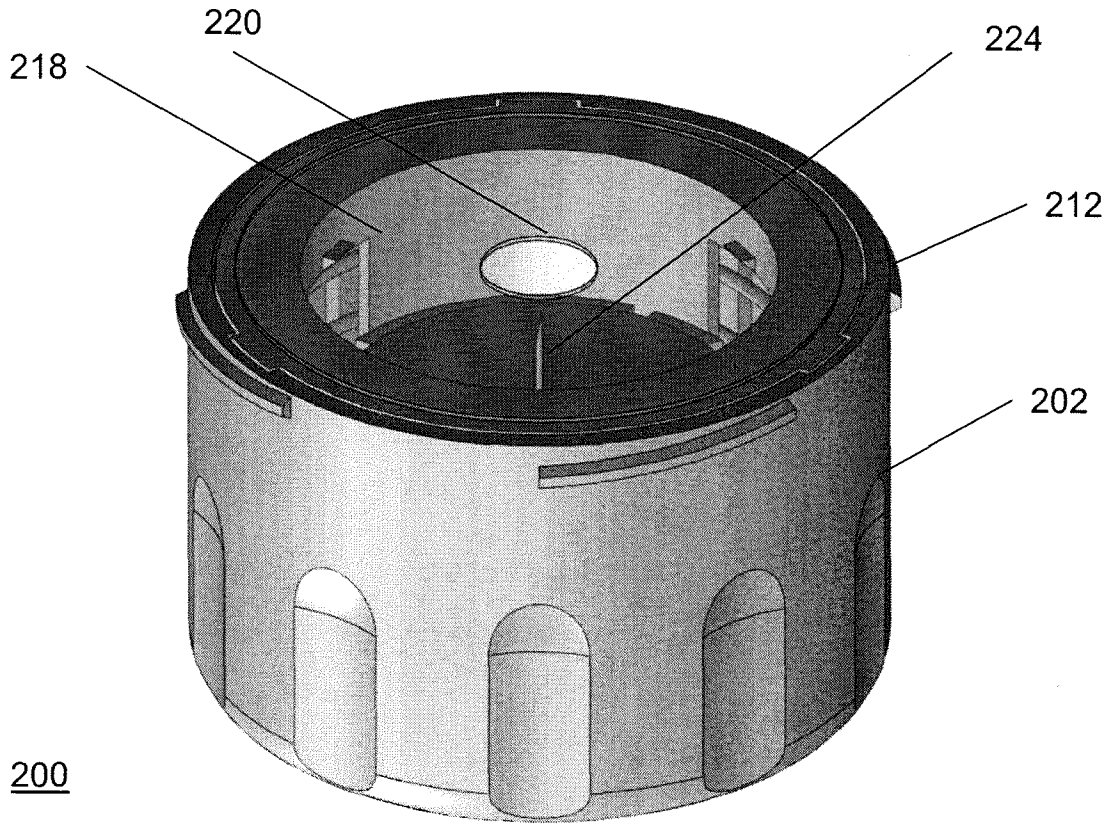

FIGURE 36

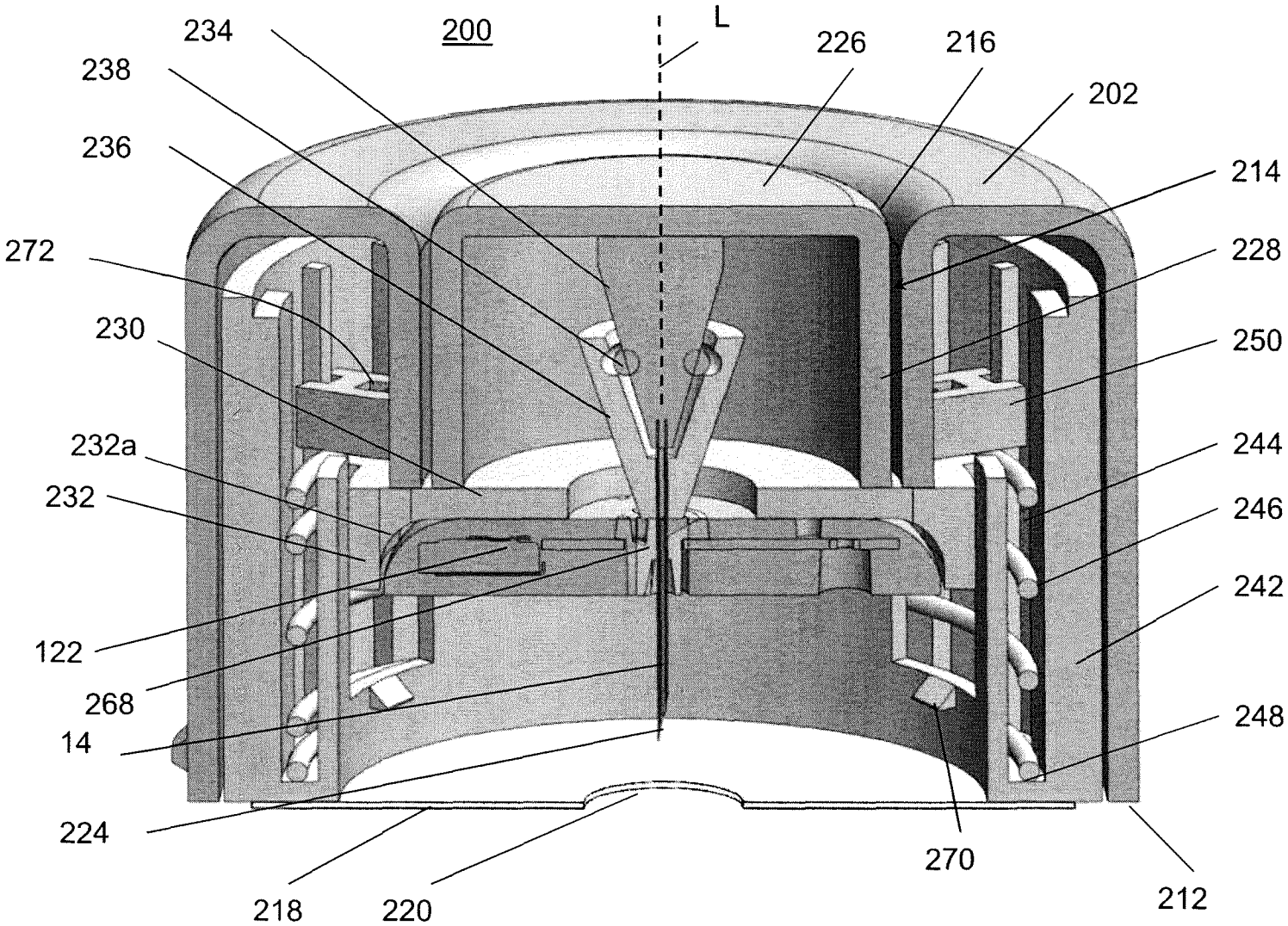
200
L
234
238
236
226
216
202
214
228
250
272
230
232a
232
244
246
242
122
268
14
248
224
270
218
220
212

FIGURE 37

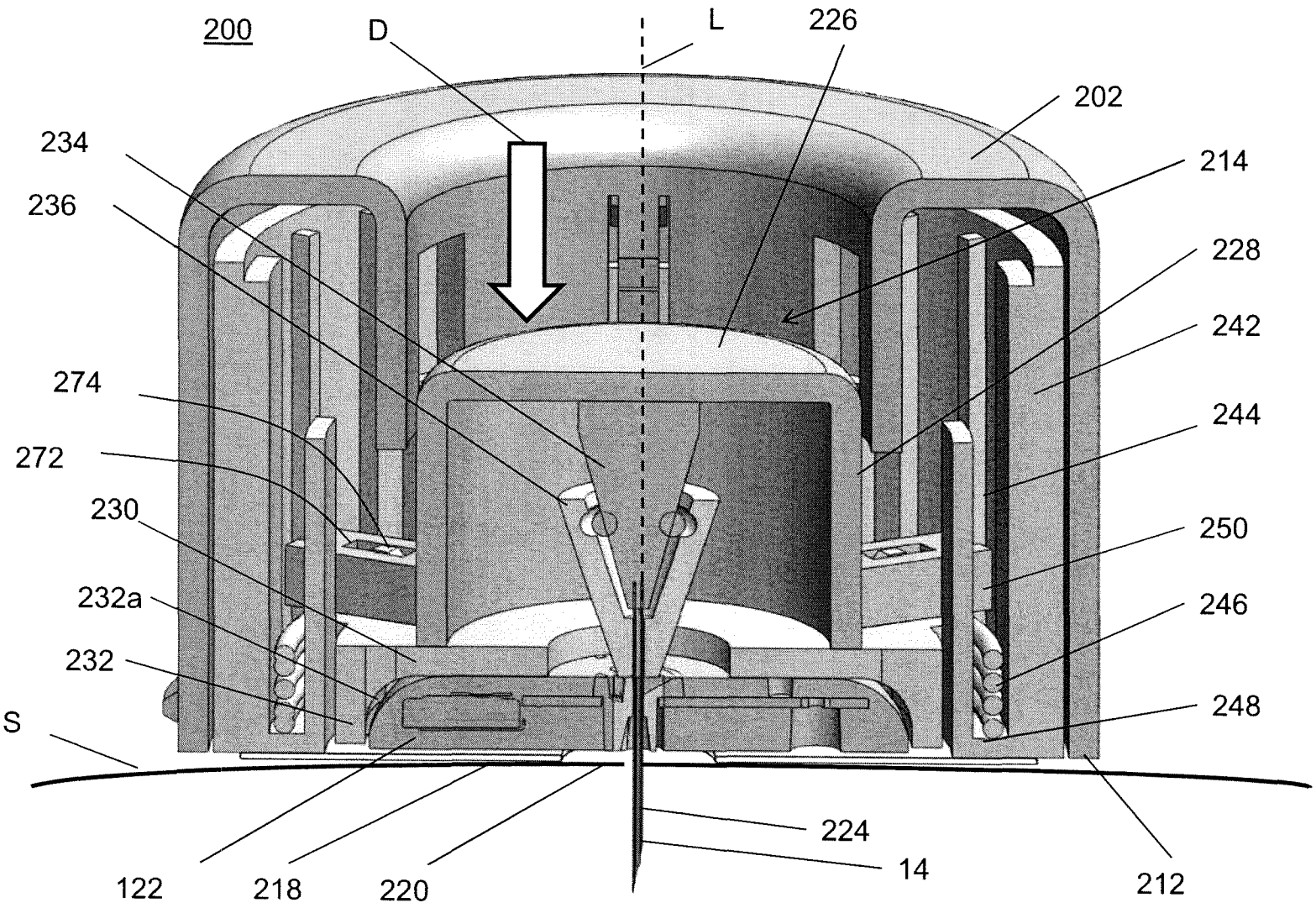
200
D
L
226
202
234
214
236
228
242
274
244
272
230
250
232a
246
232
248
S
224
14
122
218
220
212

FIGURE 38

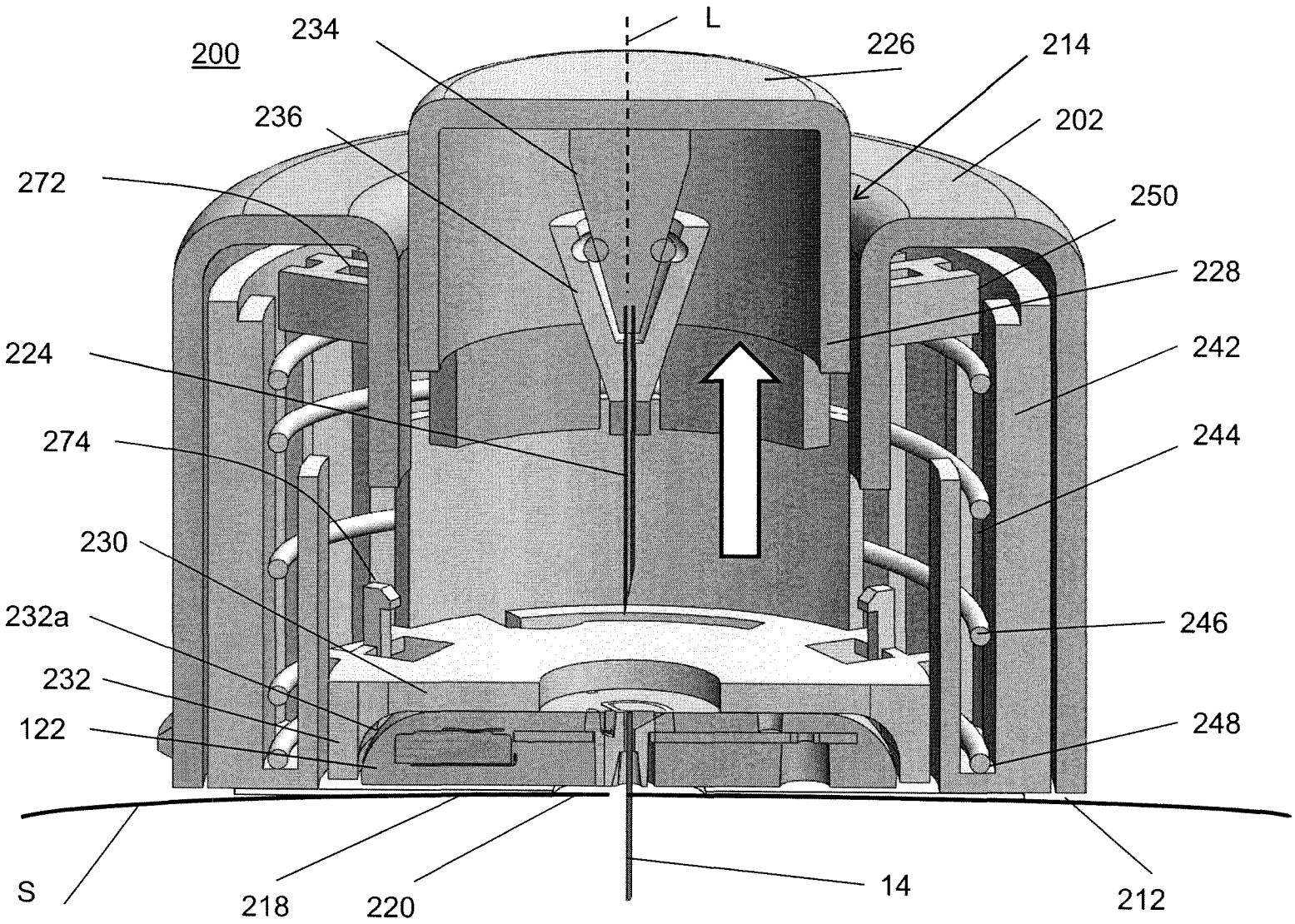
200
234
L
226
214
236
202
272
250
228
224
242
274
244
230
232a
246
232
122
248
S
218
220
14
212

FIGURE 39

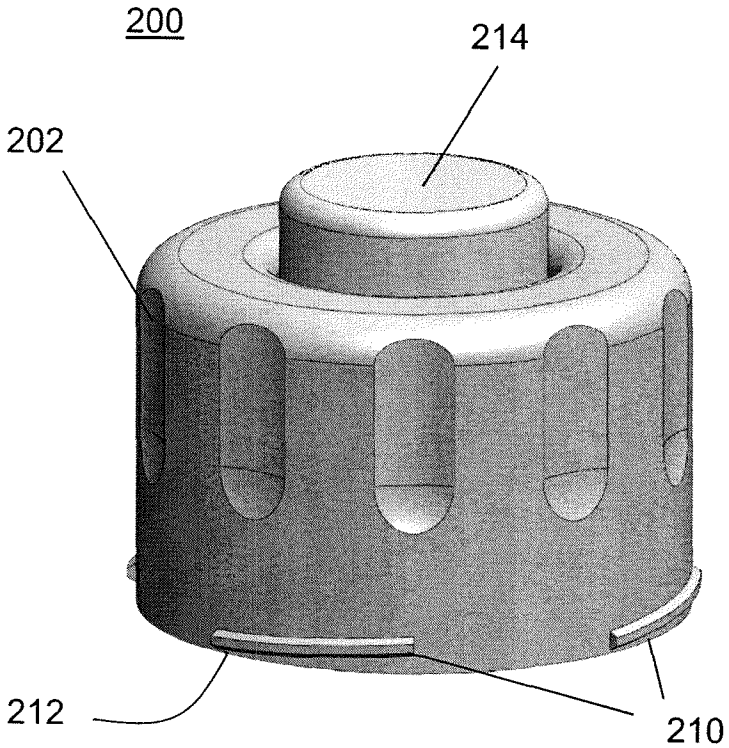

FIGURE 40

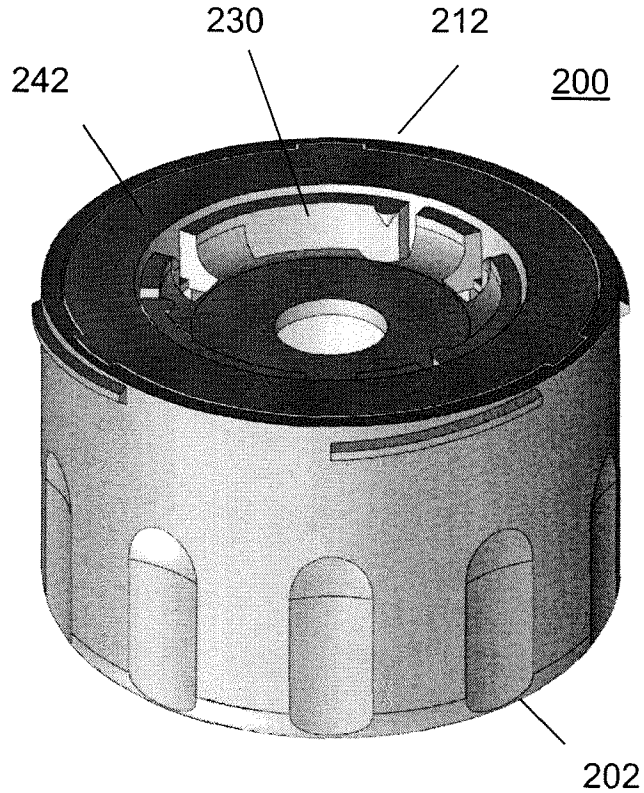

FIGURE 41

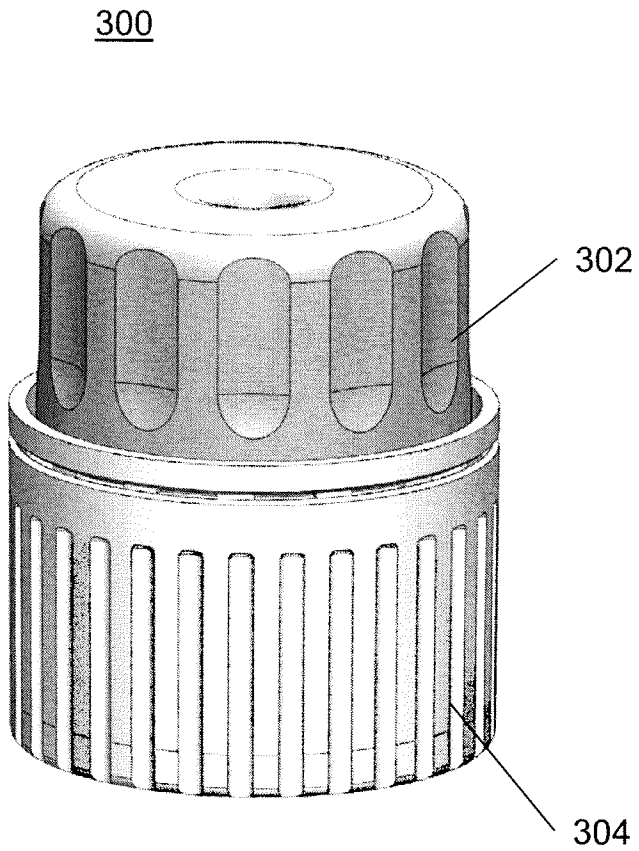

FIGURE 42

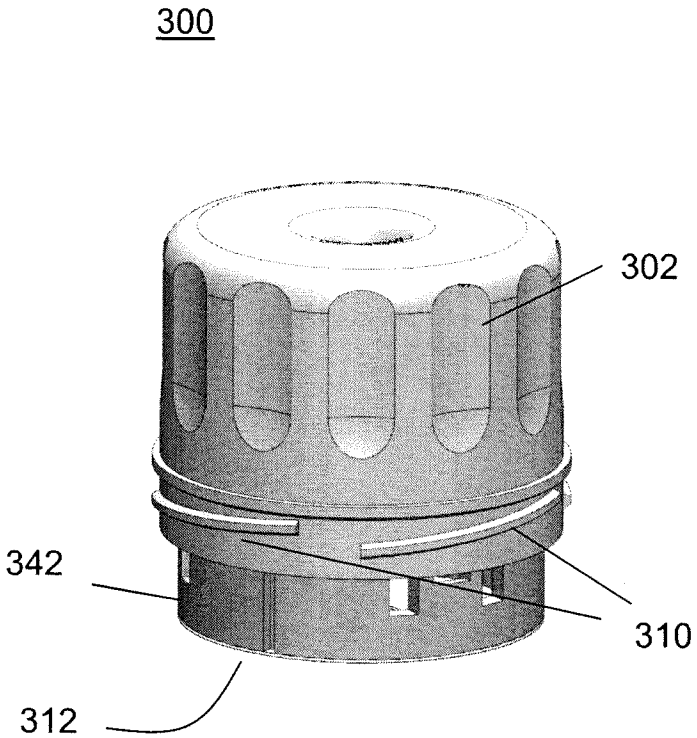

FIGURE 43

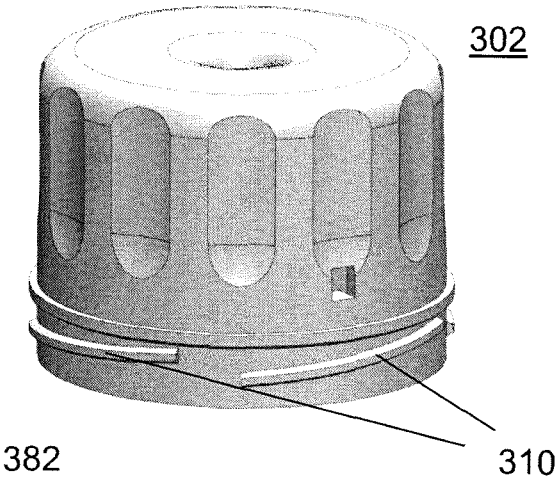

FIGURE 44

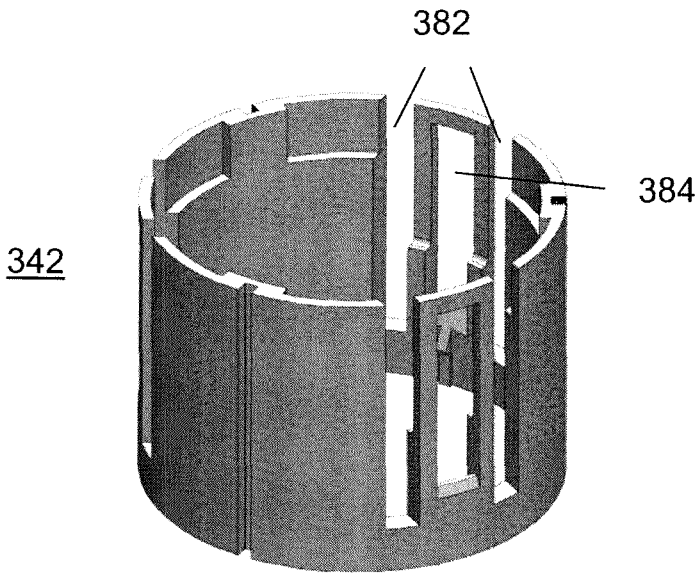

FIGURE 45

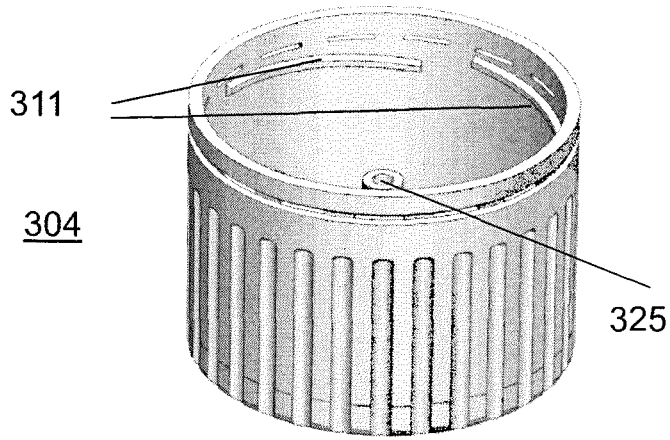

FIGURE 46

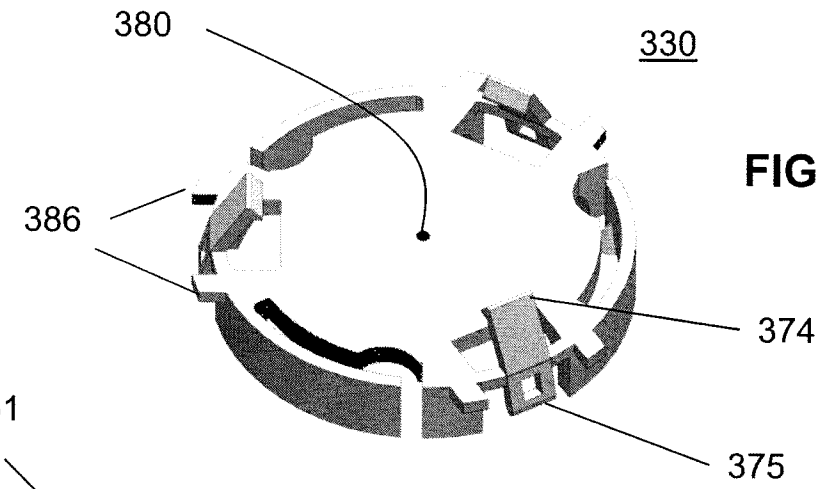

FIGURE 47

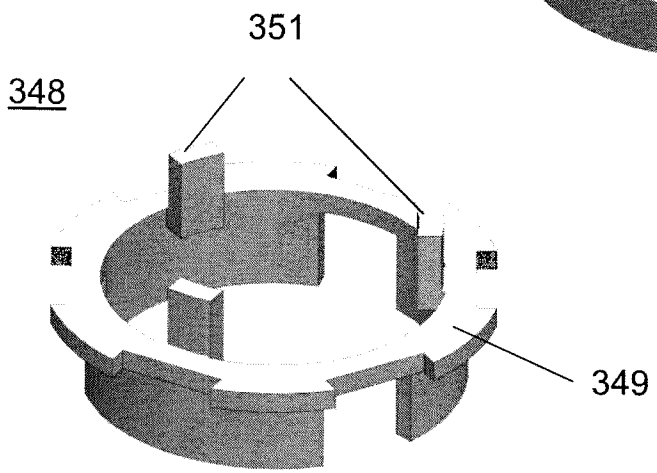

FIGURE 48

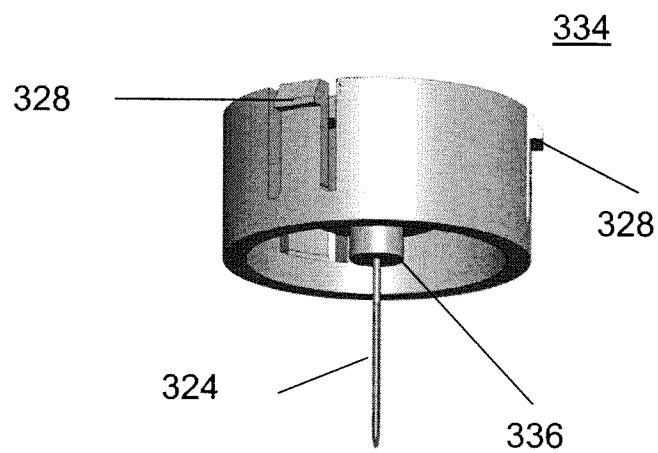

FIGURE 49

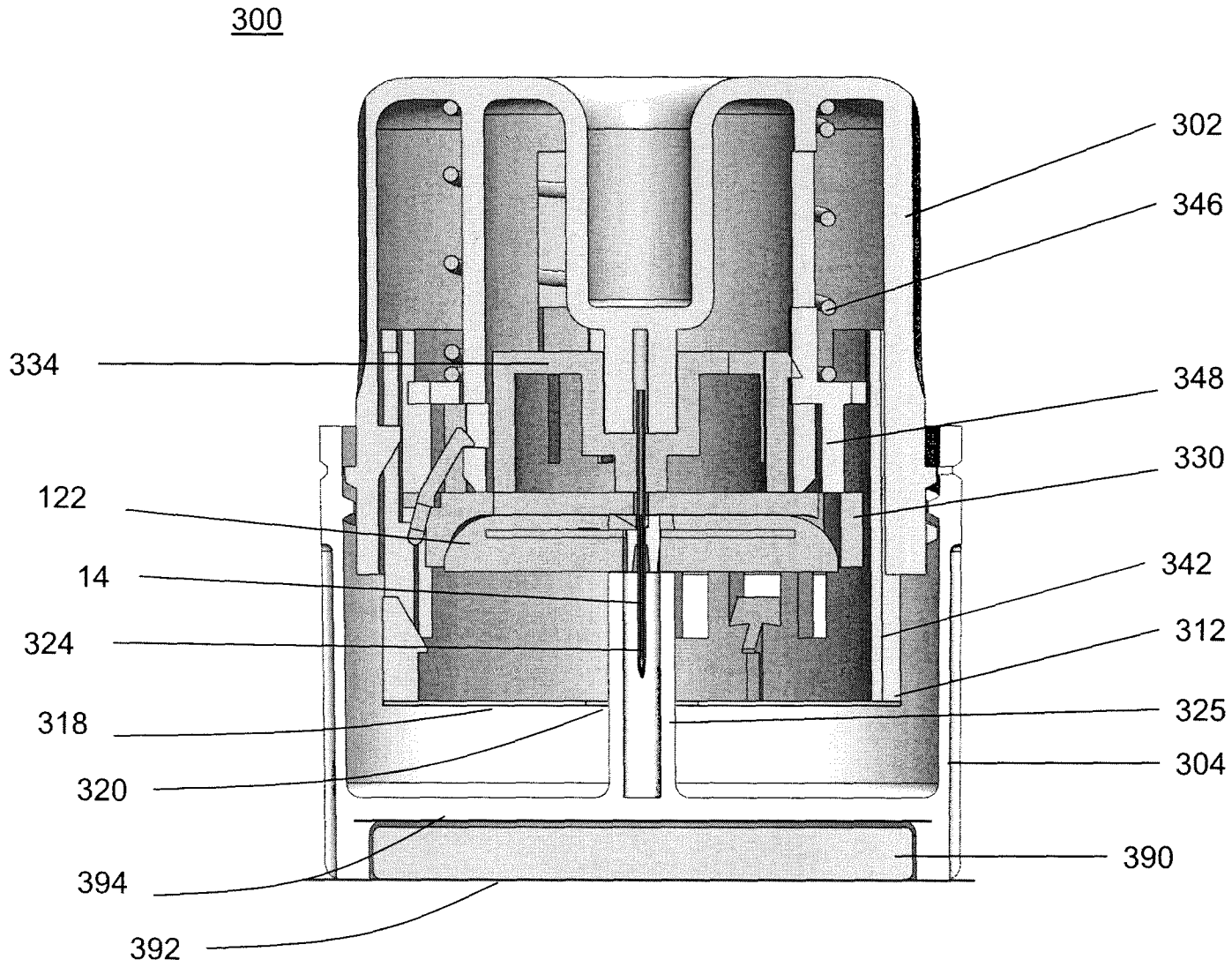
300
302
346
334
348
330
122
14
342
324
312
318
325
320
304
394
390
392

FIGURE 50

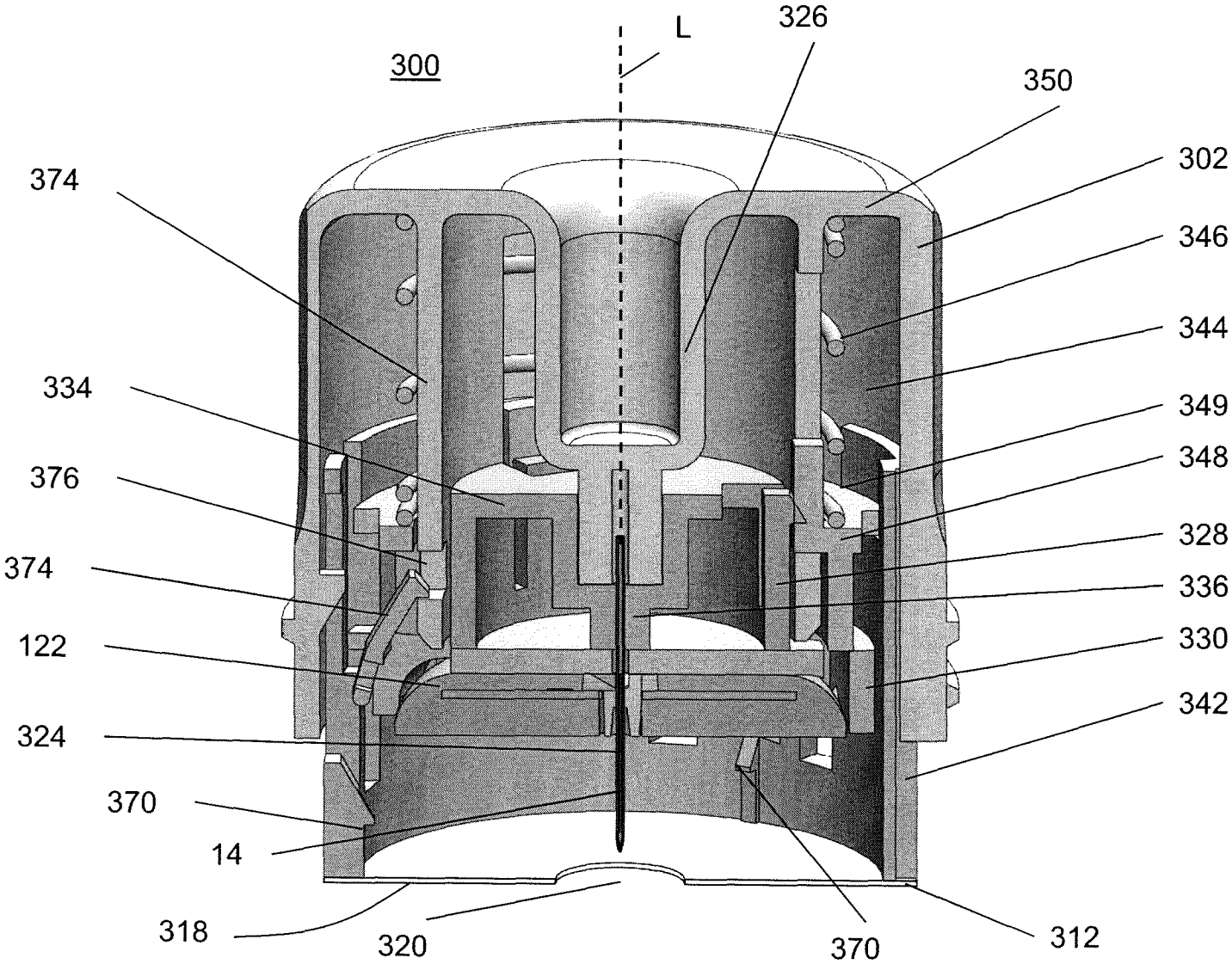
300
L
326
350
302
346
344
349
348
328
336
330
342
374
334
376
374
122
324
370
14
318
320
370
312

FIGURE 51

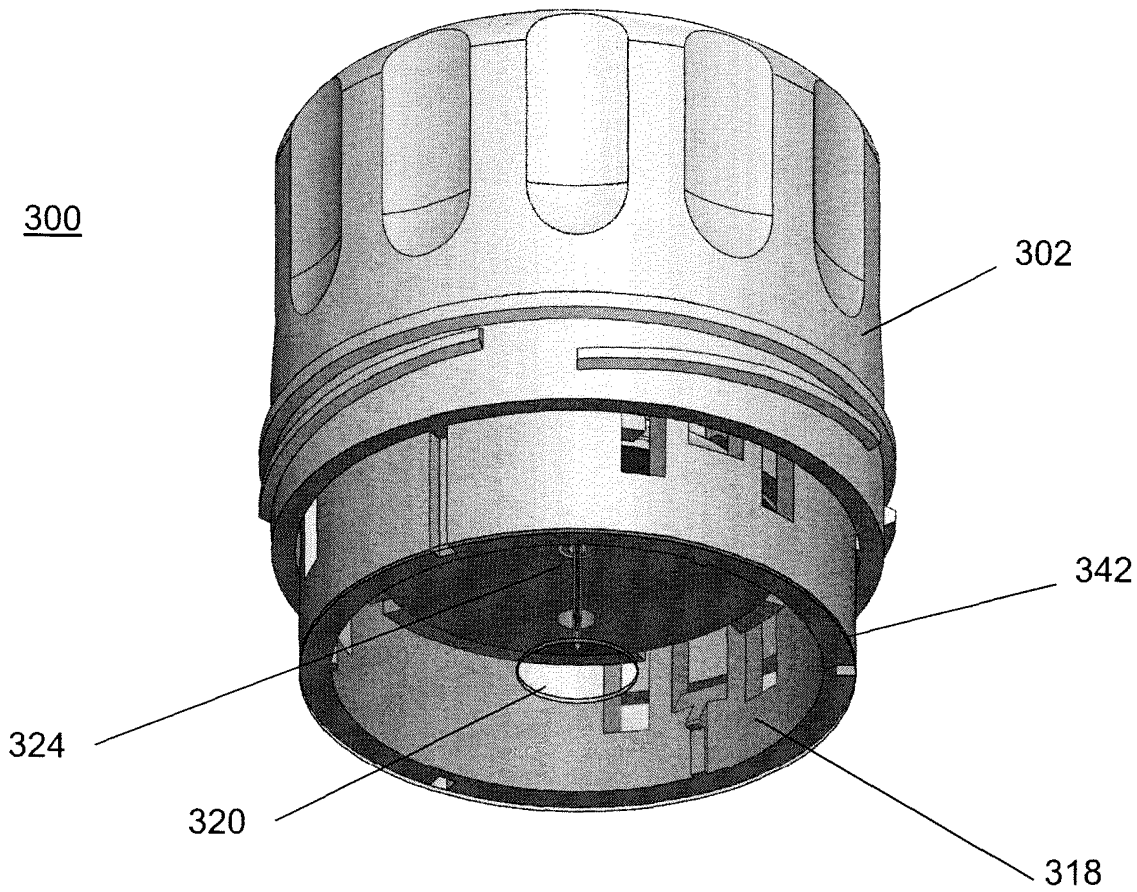

FIGURE 52

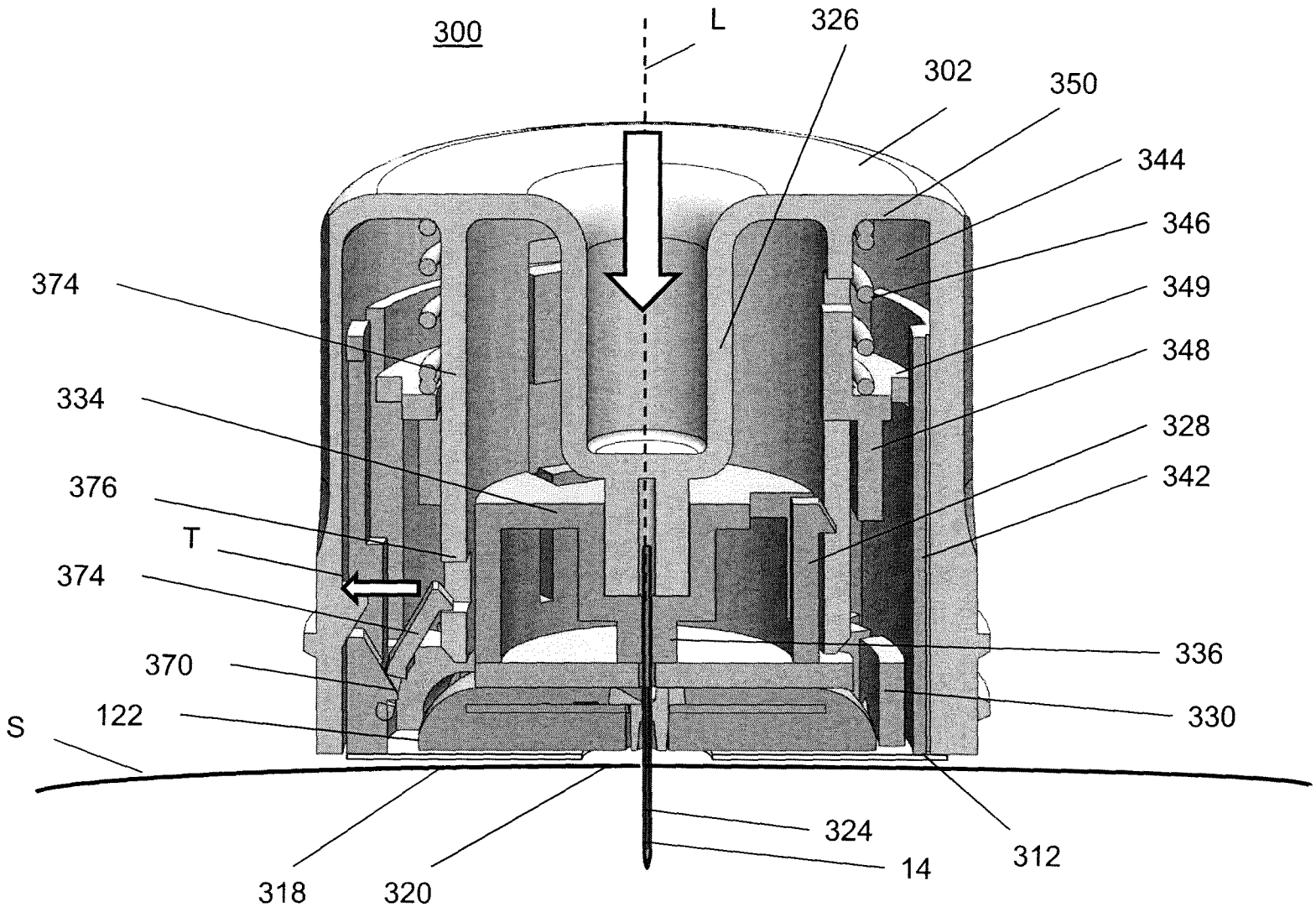
300
L
326
302
350
344
346
349
348
328
342
336
330
374
334
376
T
374
370
122
S
318
320
324
14
312

FIGURE 53

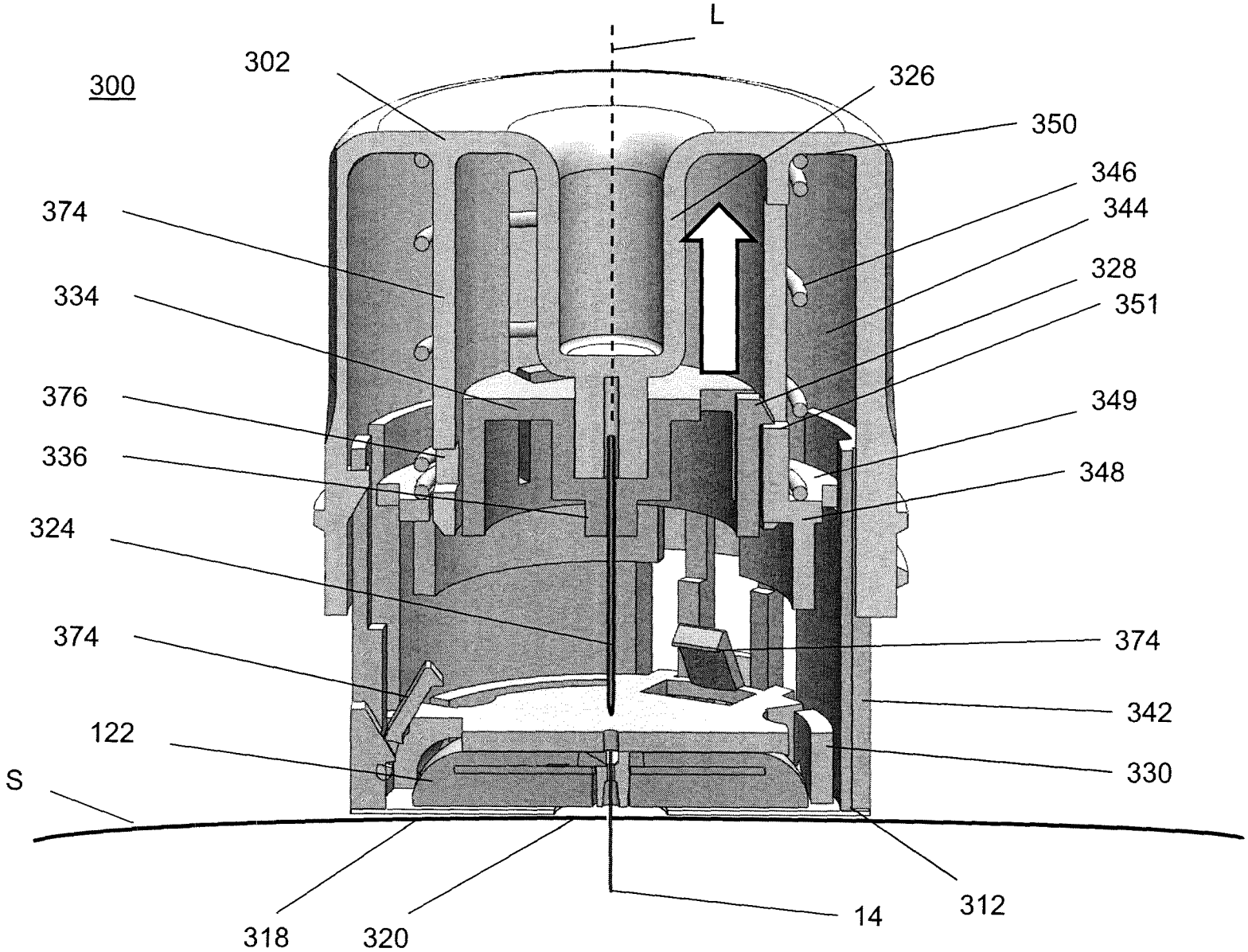
L
300
302
326
350
346
344
374
328
334
351
376
349
336
348
324
374
374
342
122
330
S
318
320
14
312

FIGURE 54

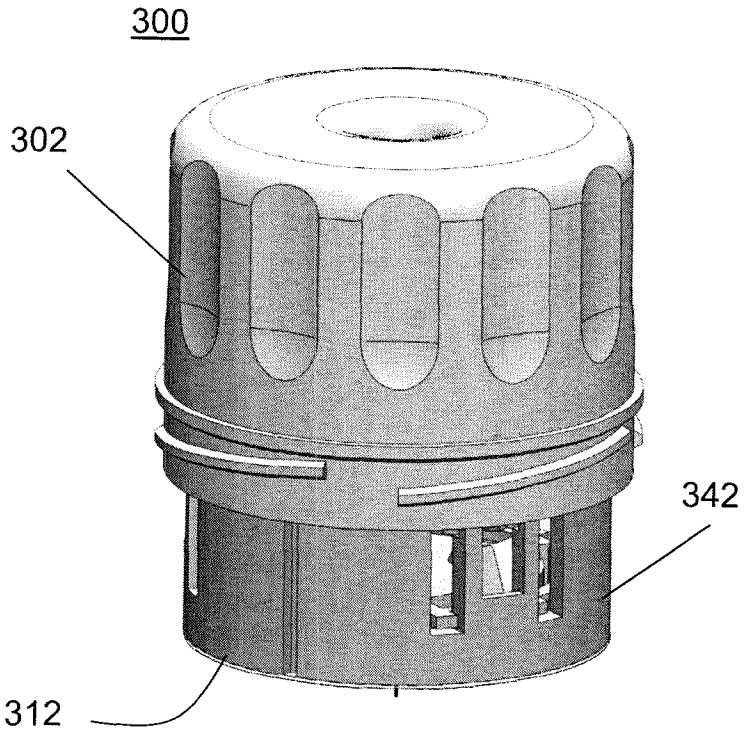

FIGURE 55

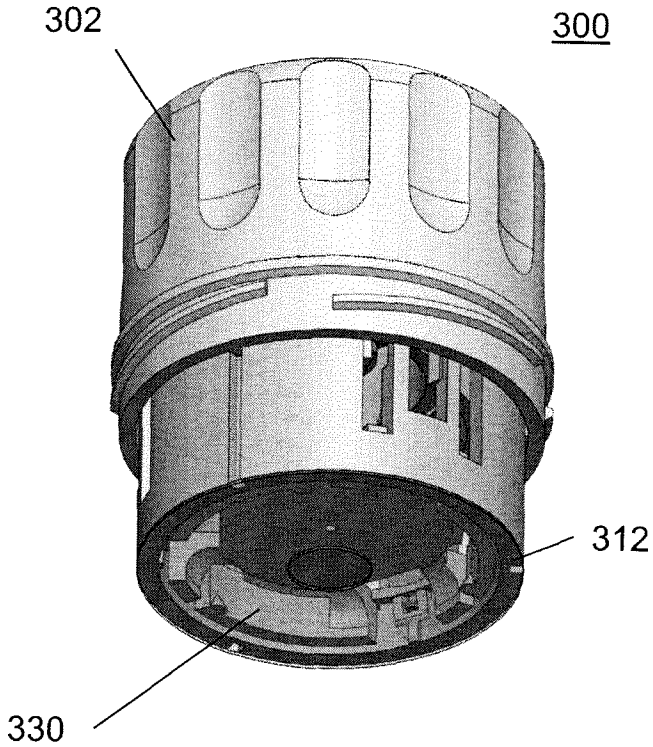

FIGURE 56

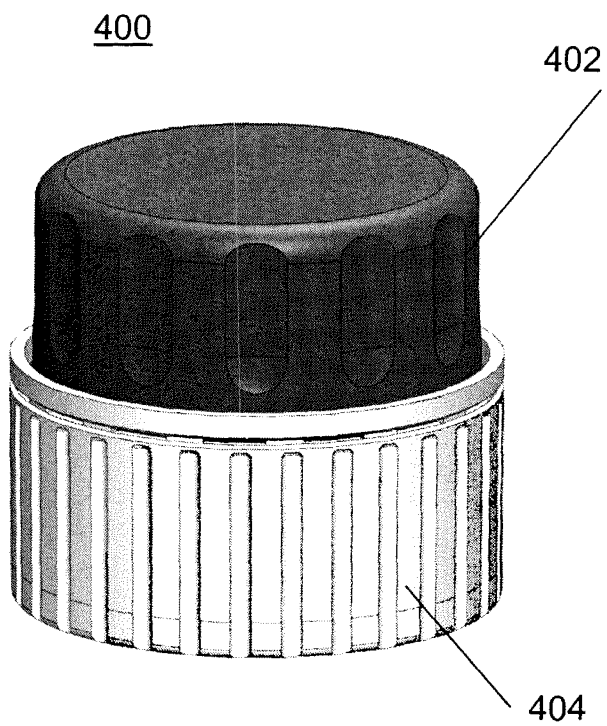

FIGURE 57

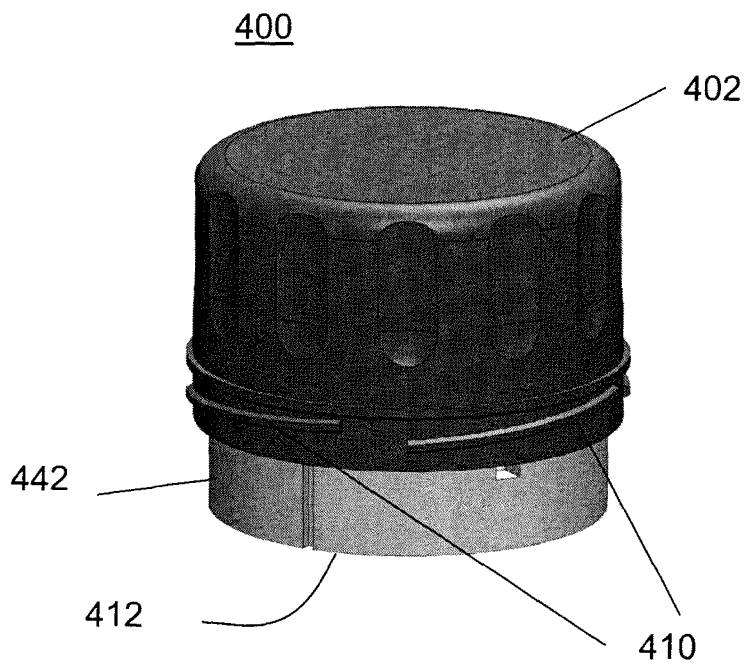

FIGURE 58

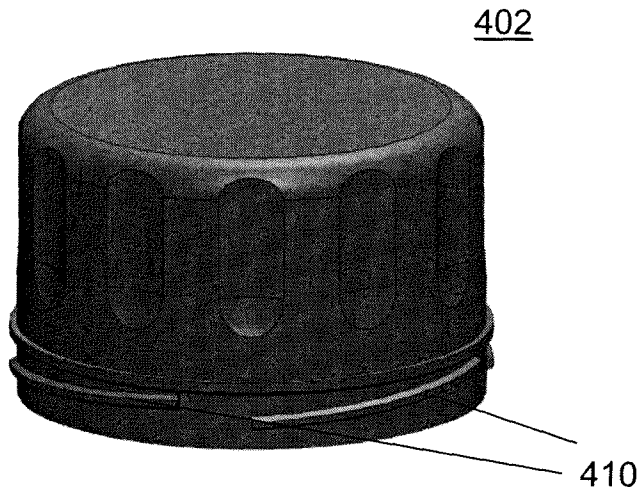

FIGURE 59

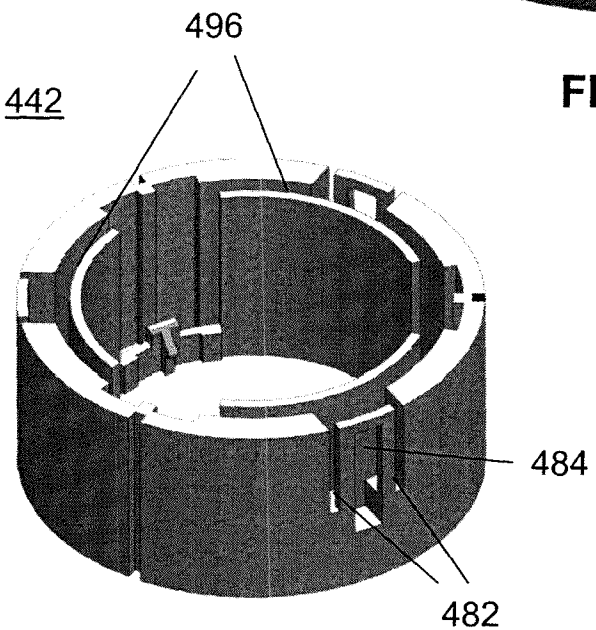

FIGURE 60

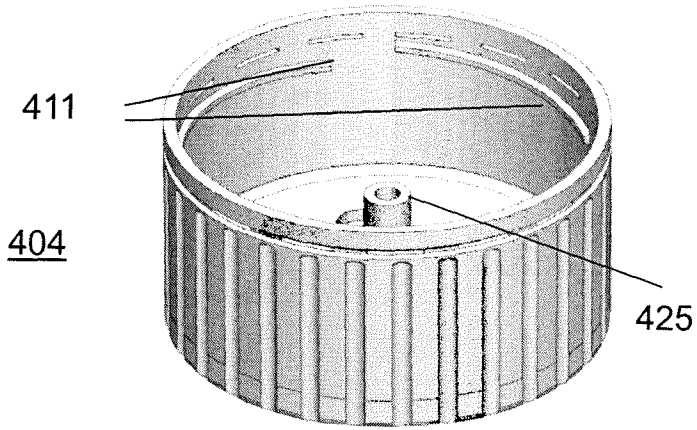

FIGURE 61

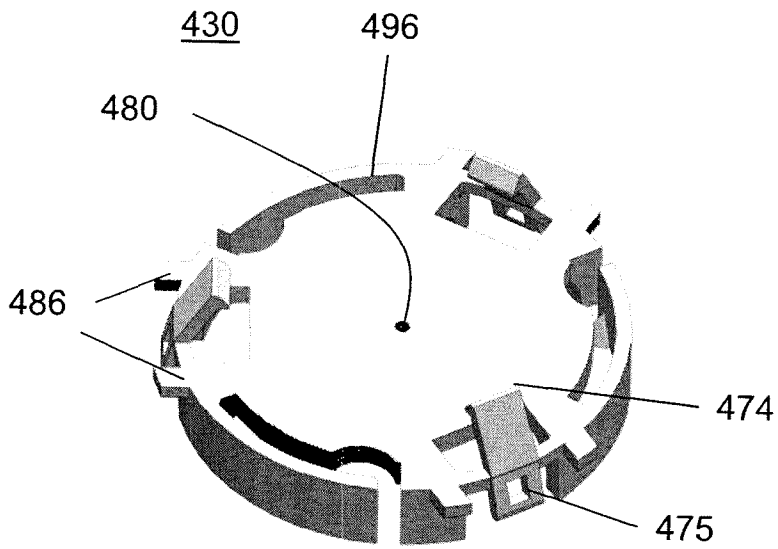

FIGURE 62

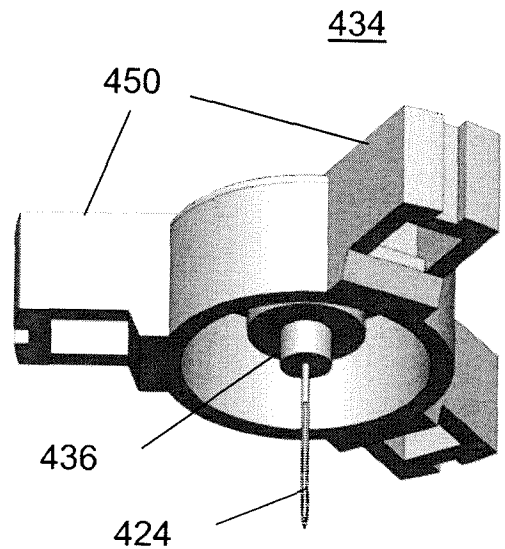

FIGURE 63

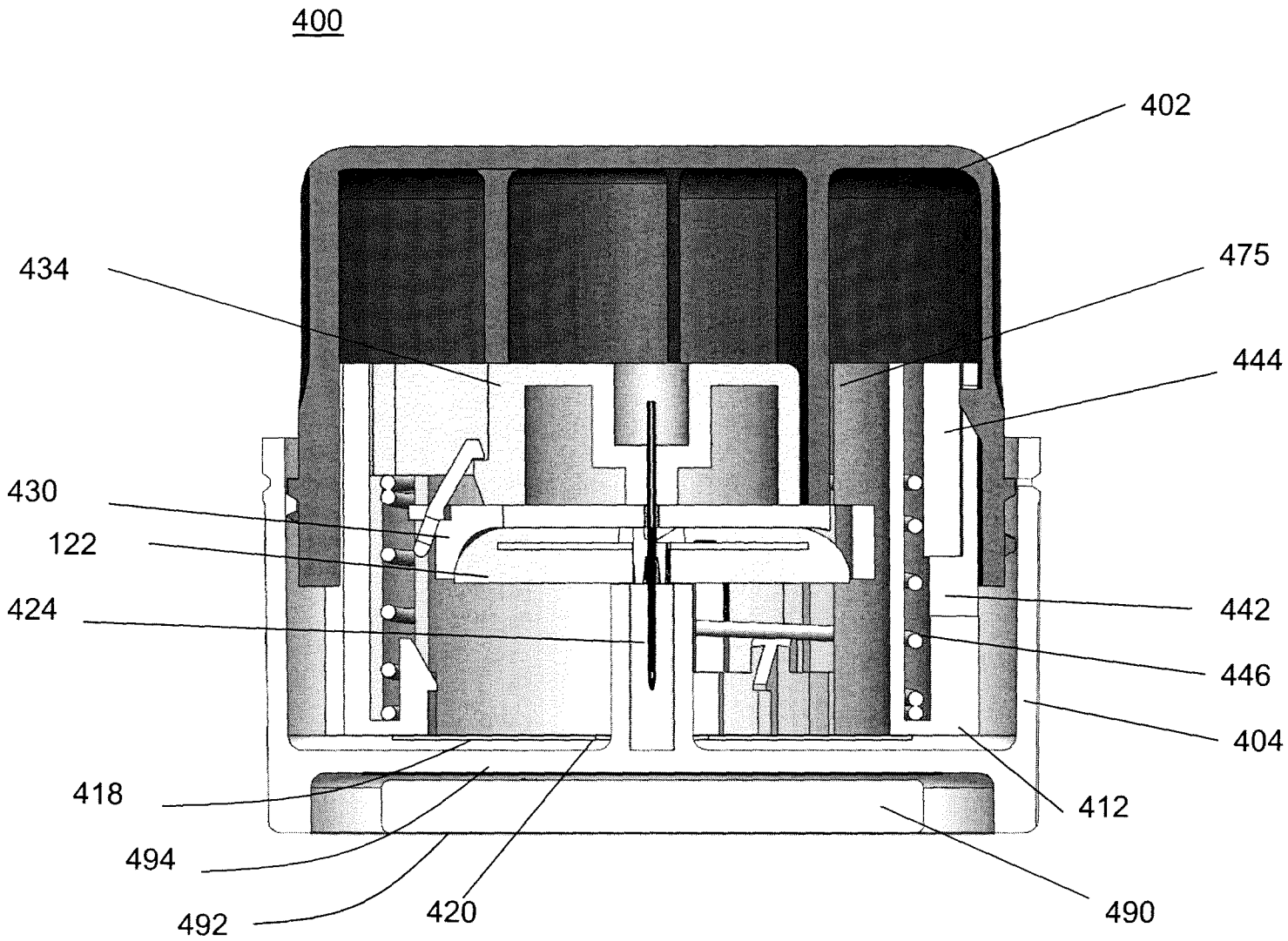
400
402
434
475
444
430
122
424
442
446
404
418
412
494
492
420
490

FIGURE 64

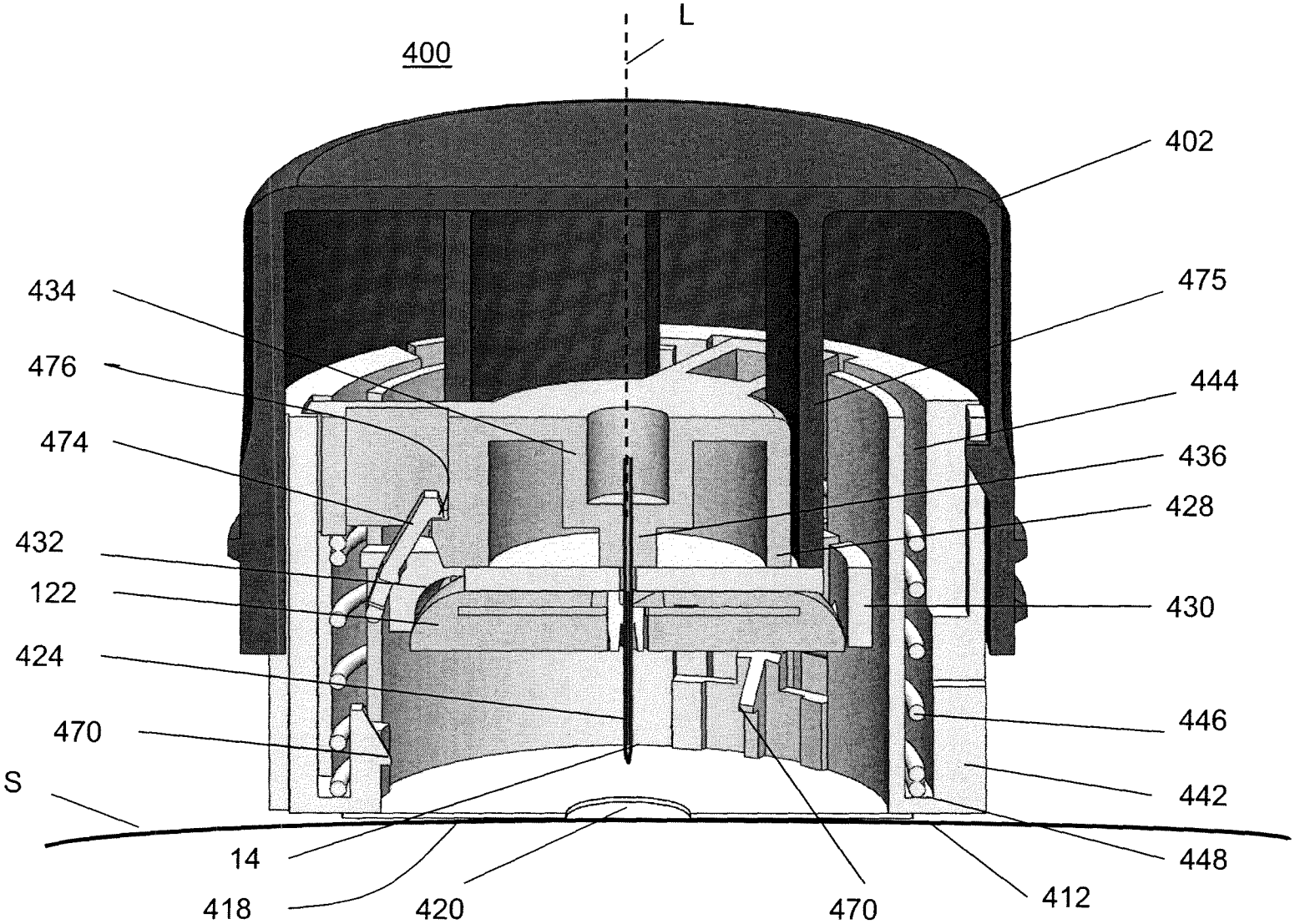
L
400
402
475
444
436
428
430
446
442
448
412
470
420
418
14
S
470
424
122
432
474
476
434

FIGURE 65

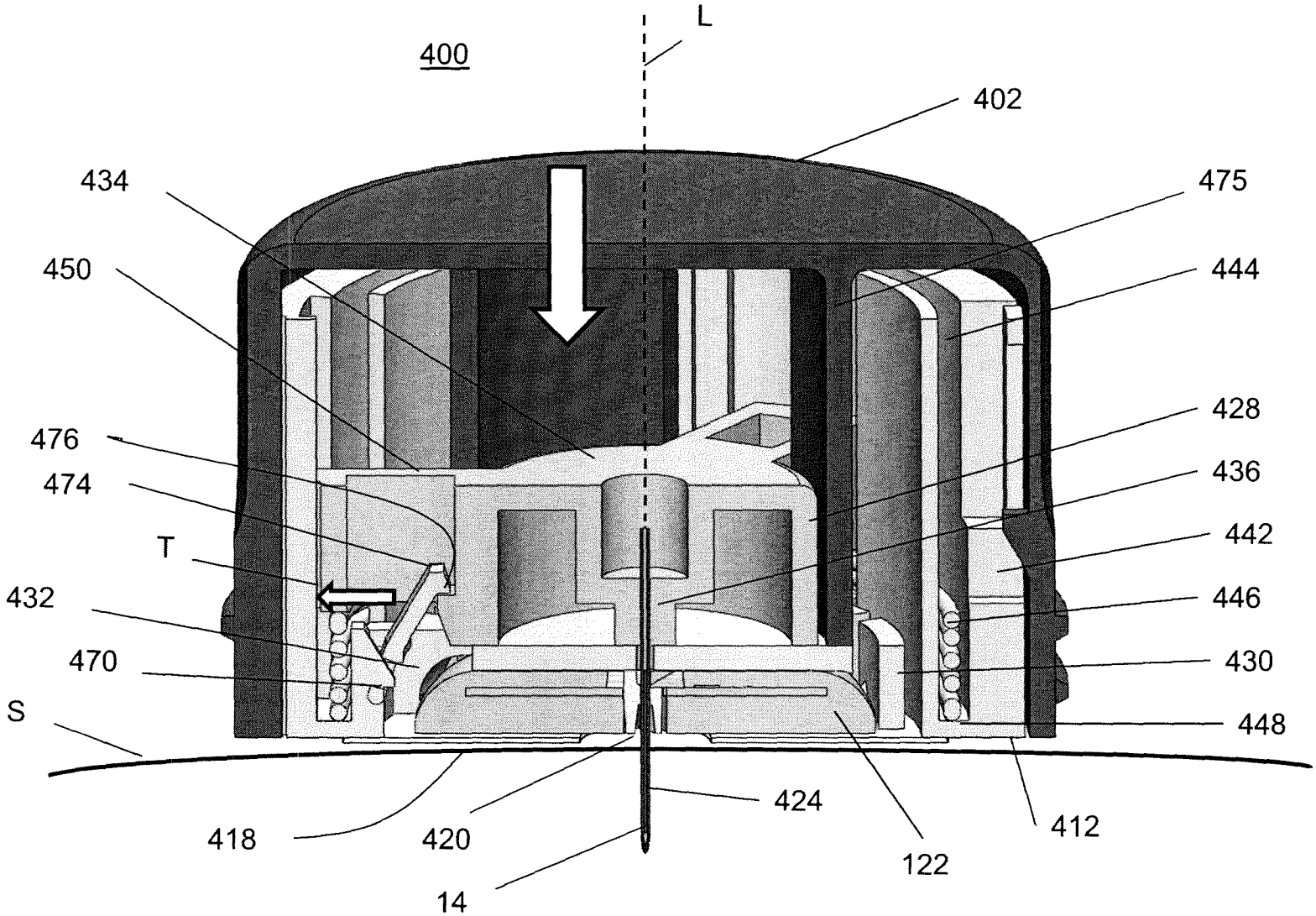
400
L
402
434
475
450
444
428
476
436
474
442
T
432
446
470
430
S
448
424
418
420
412
122
14

FIGURE 66

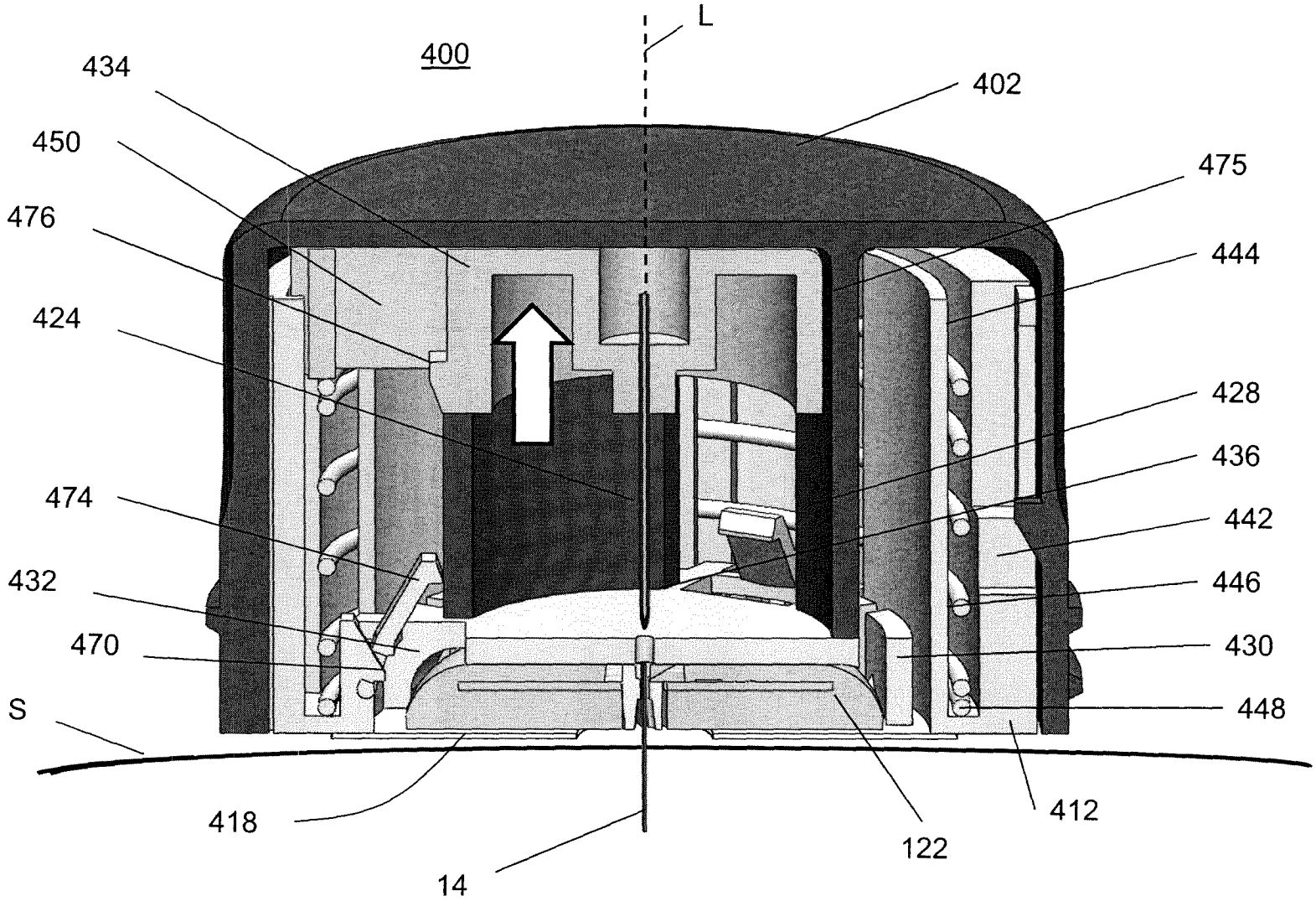
L
400
434
402
450
475
476
444
424
428
436
474
442
432
446
470
430
S
448
418
412
122
14

FIGURE 67

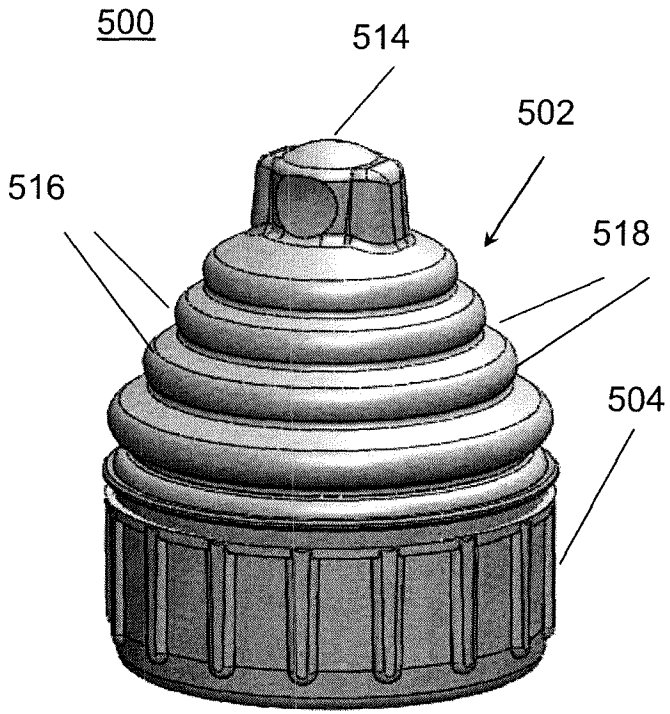

FIGURE 68

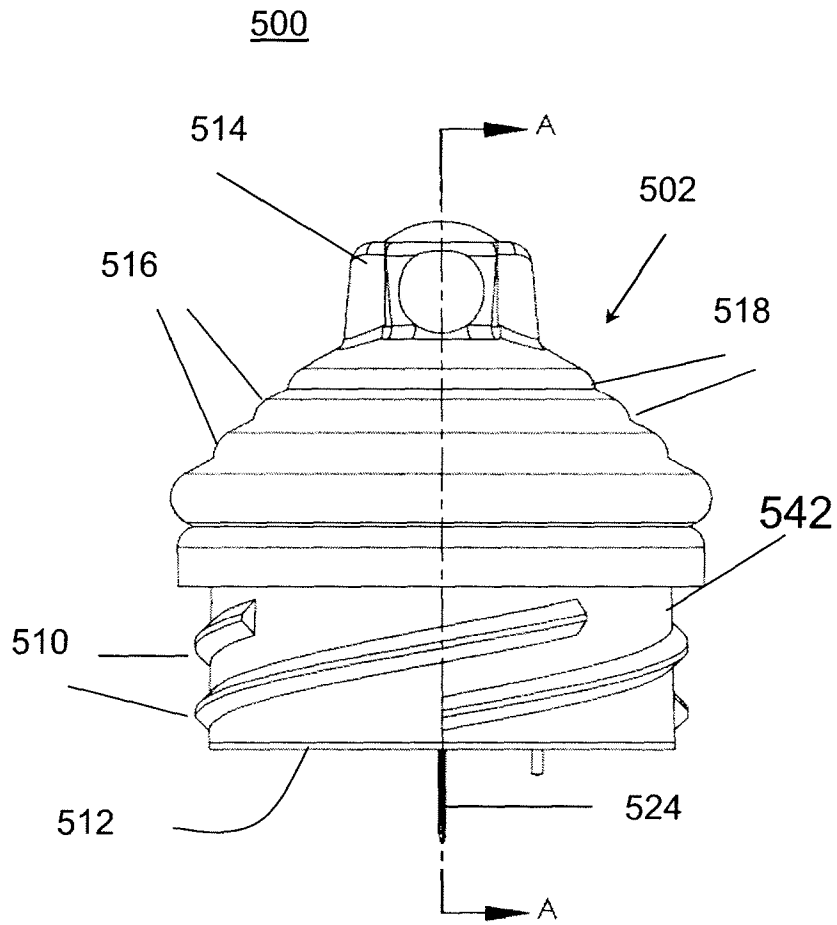

FIGURE 69

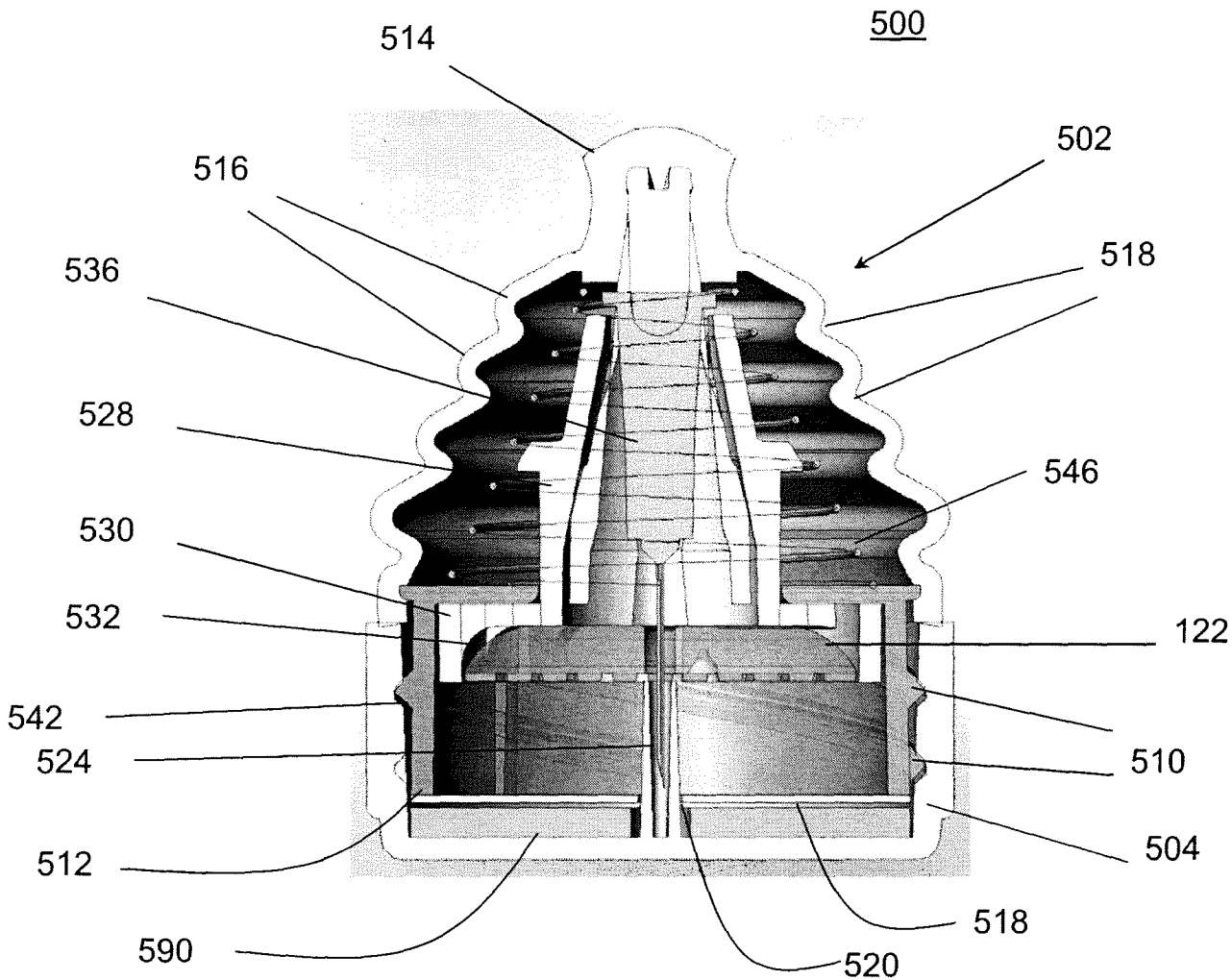
500
514
502
516
518
536
528
546
530
532
122
542
510
524
504
512
518
590
520

FIGURE 70

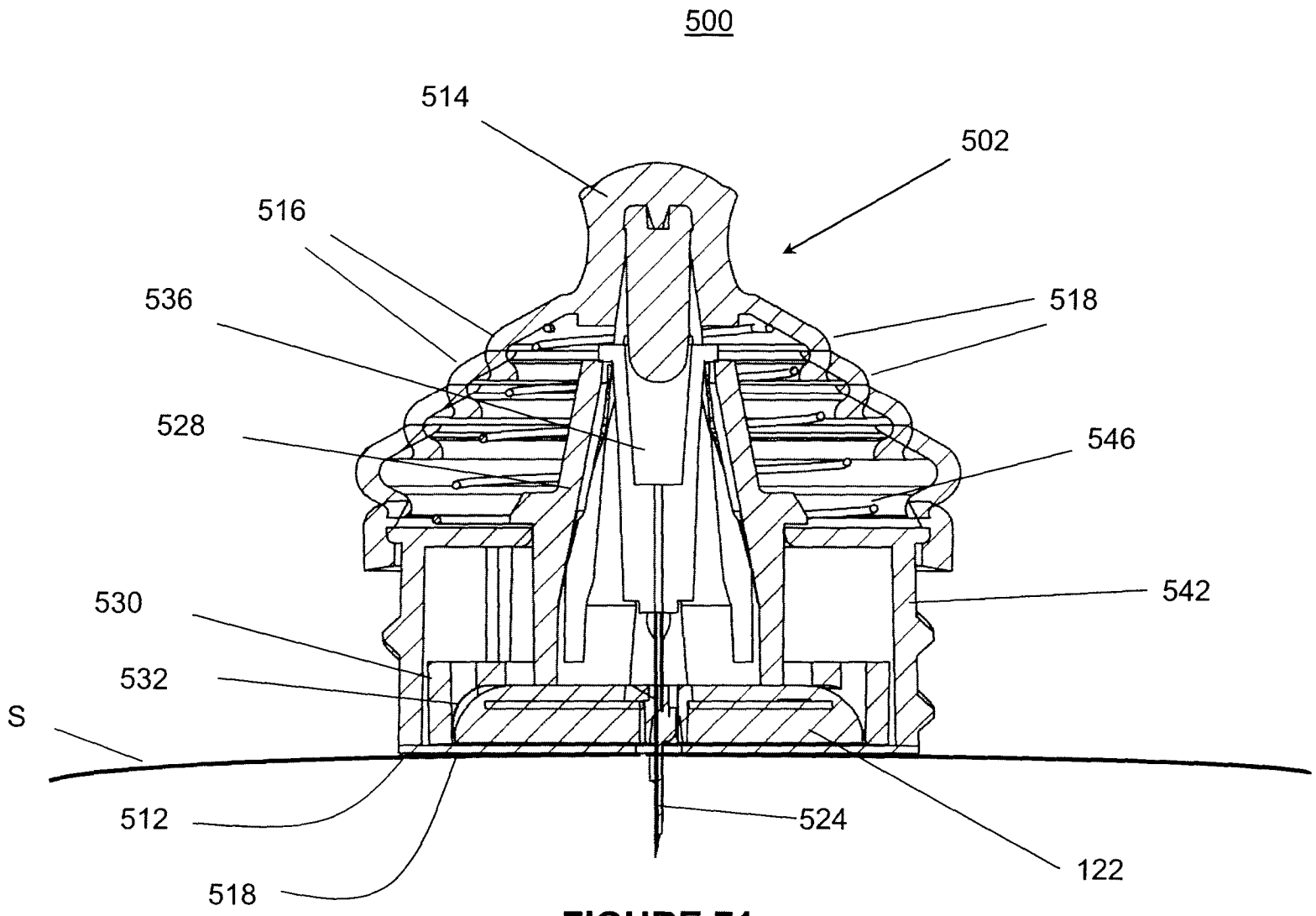

FIGURE 71

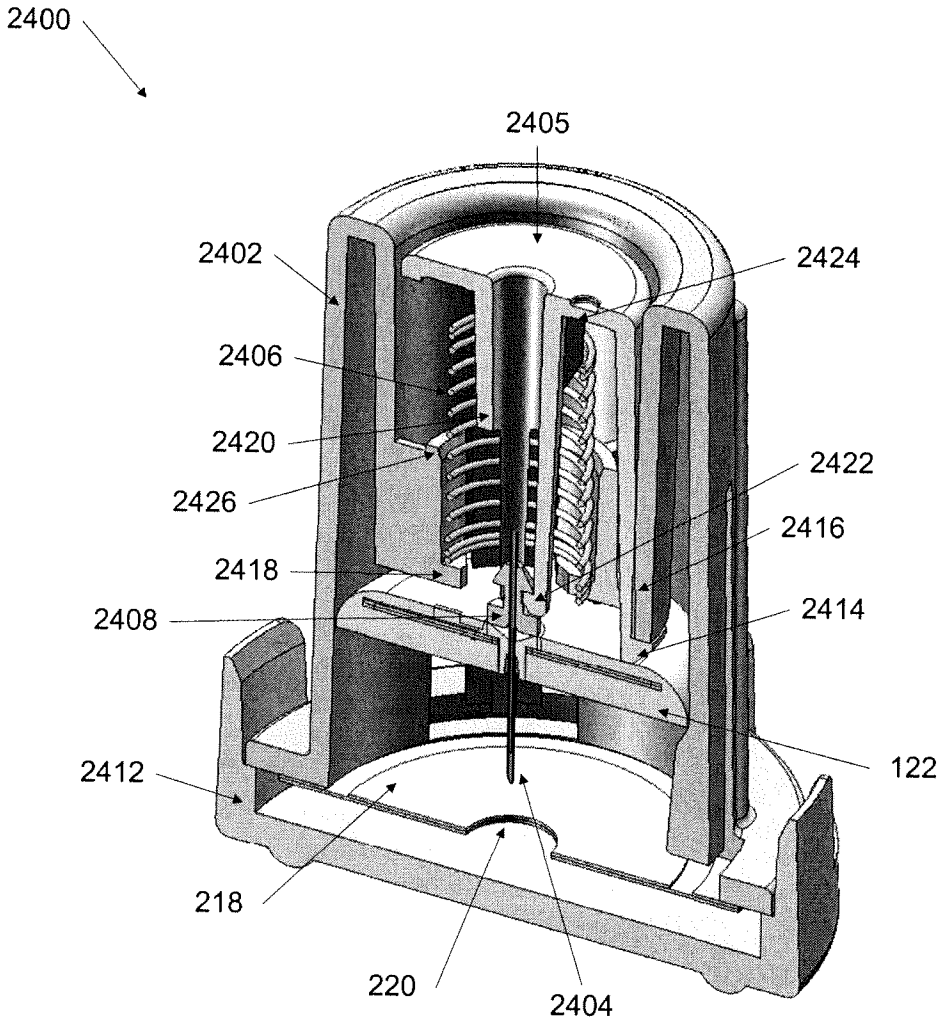
2400
2405
2402
2424
2406
2420
2422
2426
2416
2418
2408
2414
2412
122
218
220
2404

FIG. 72

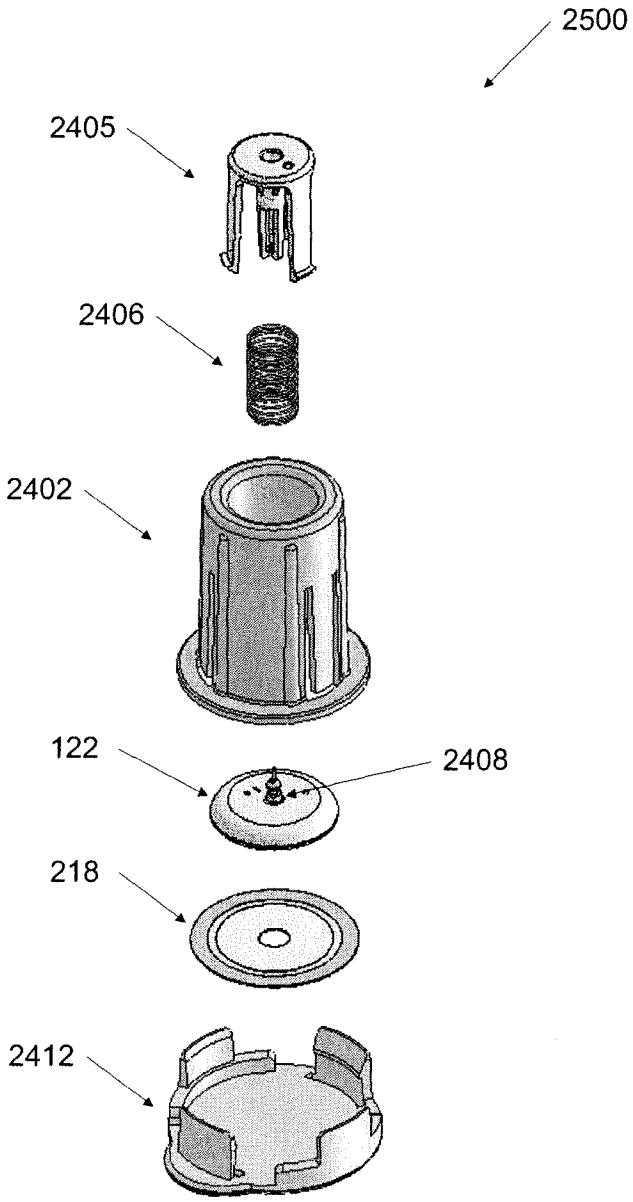

FIG. 72A

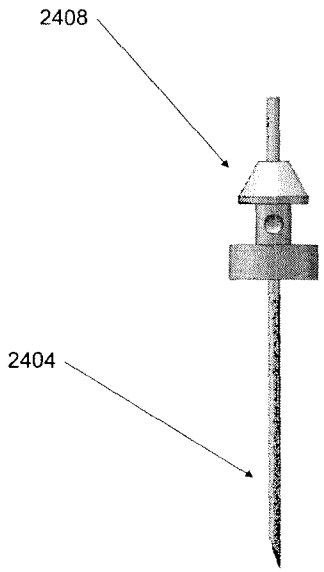

FIG. 72B

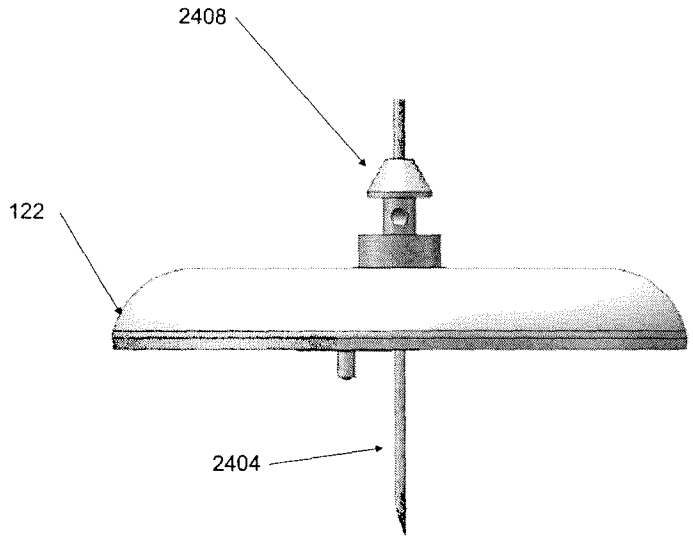

FIG. 72C

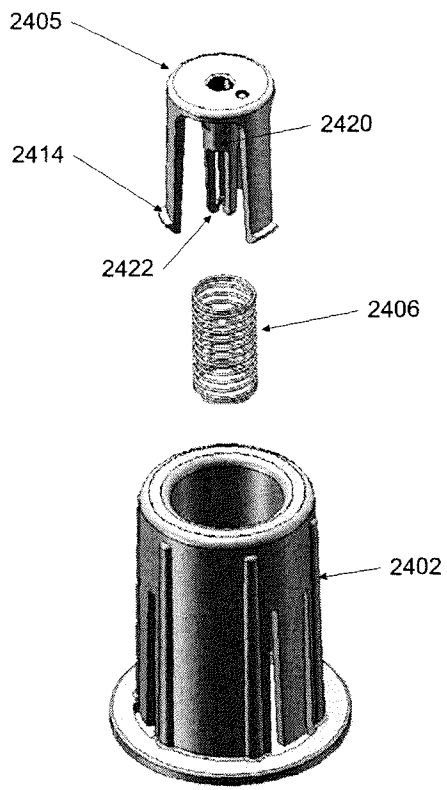

FIG. 72D

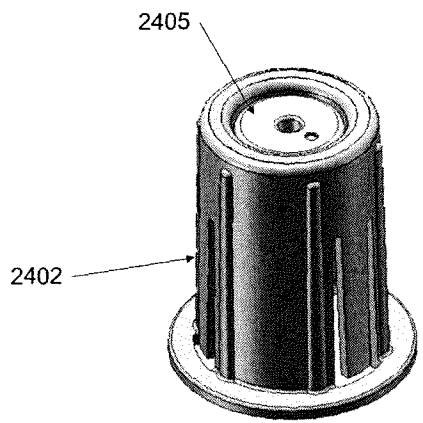

FIG. 72E

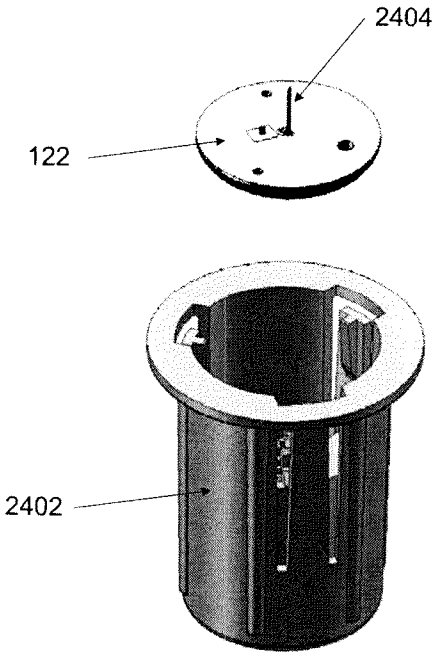

FIG. 72F

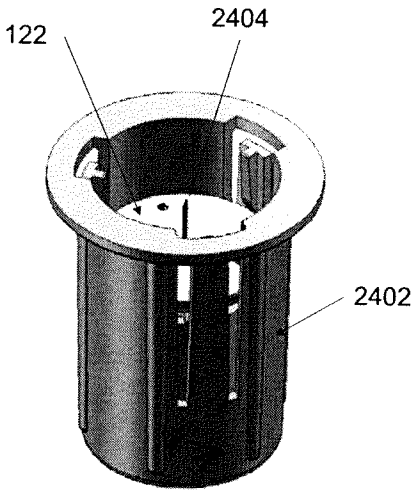

FIG. 72G

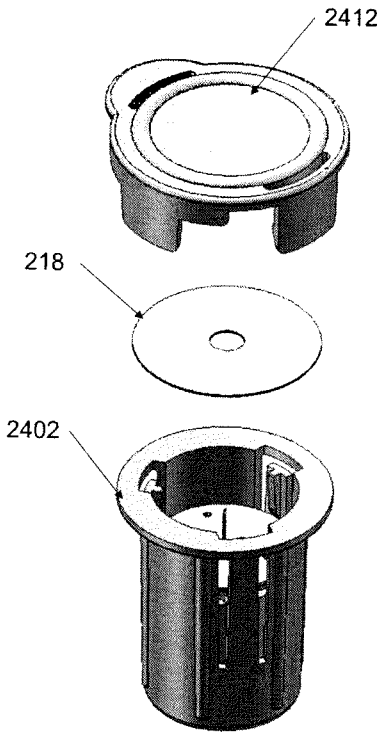

FIG. 72H

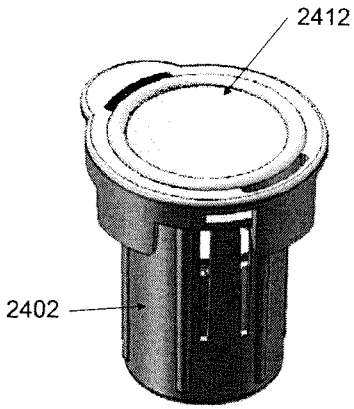

FIG. 72I

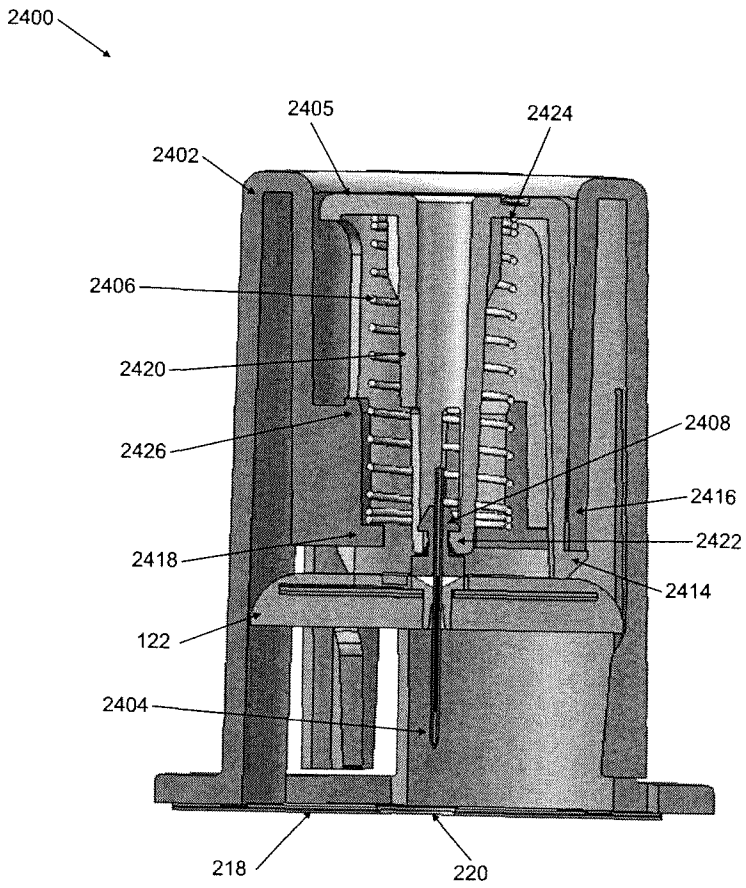
2400
2405
2424
2402
2406
2420
2426
2408
2416
2422
2418
2414
122
2404
218
220

FIG. 72J

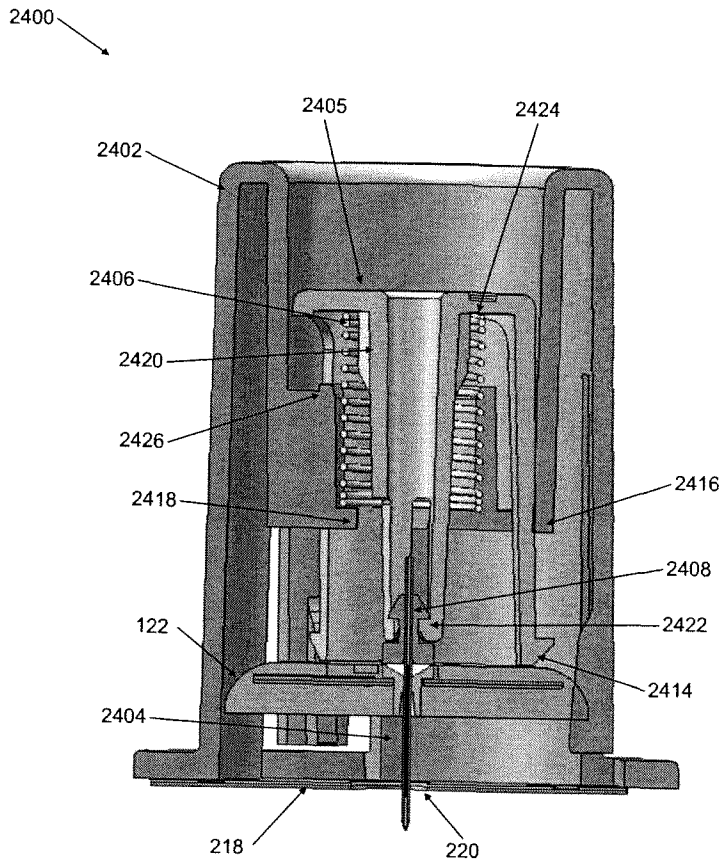
2400
2405
2424
2402
2406
2420
2426
2418
2416
2408
2422
122
2414
2404
218
220

FIG. 72K

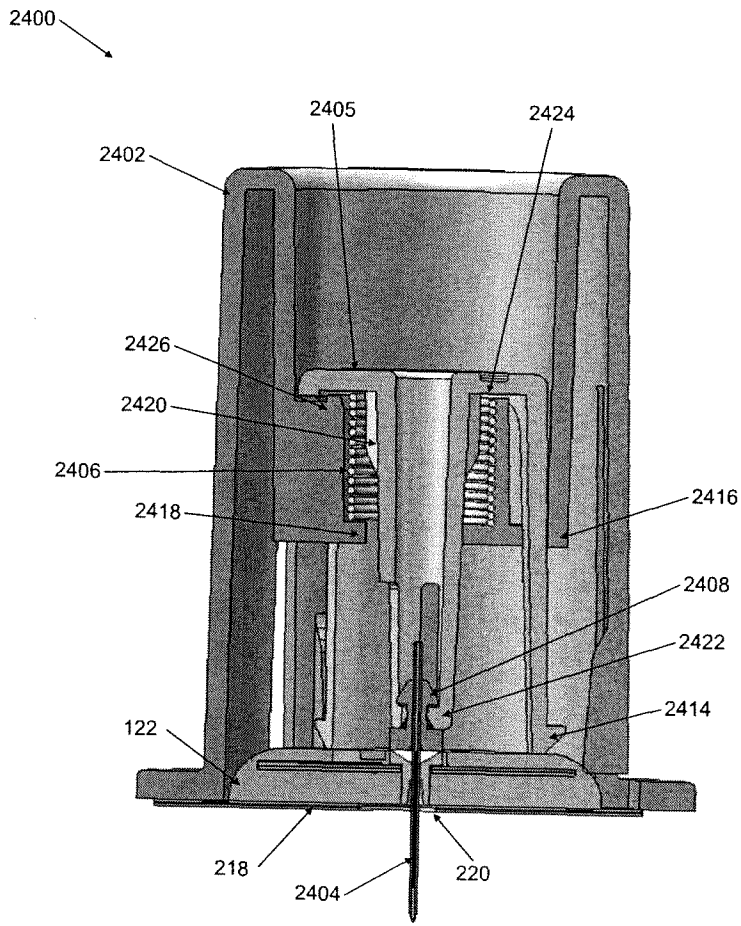
2400
2405
2424
2402
2426
2420
2406
2418
2416
2408
2422
2414
122
218
2404
220

FIG. 72L

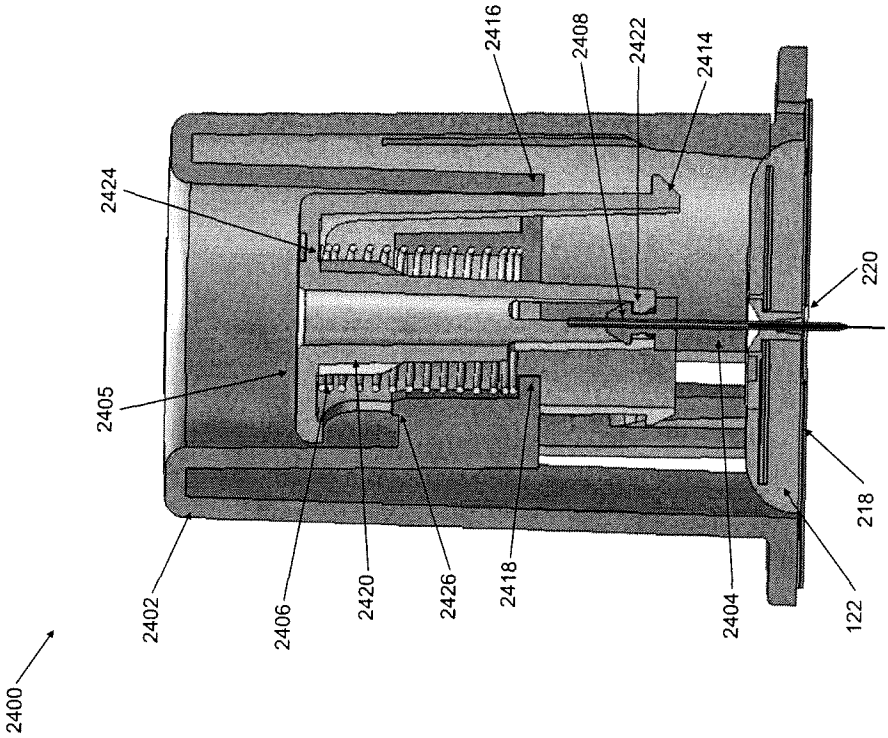
2400
2402
2406
2420
2426
2418
2404
122
218
2405
2424
2416
2408
2422
2414
220

FIG. 72M

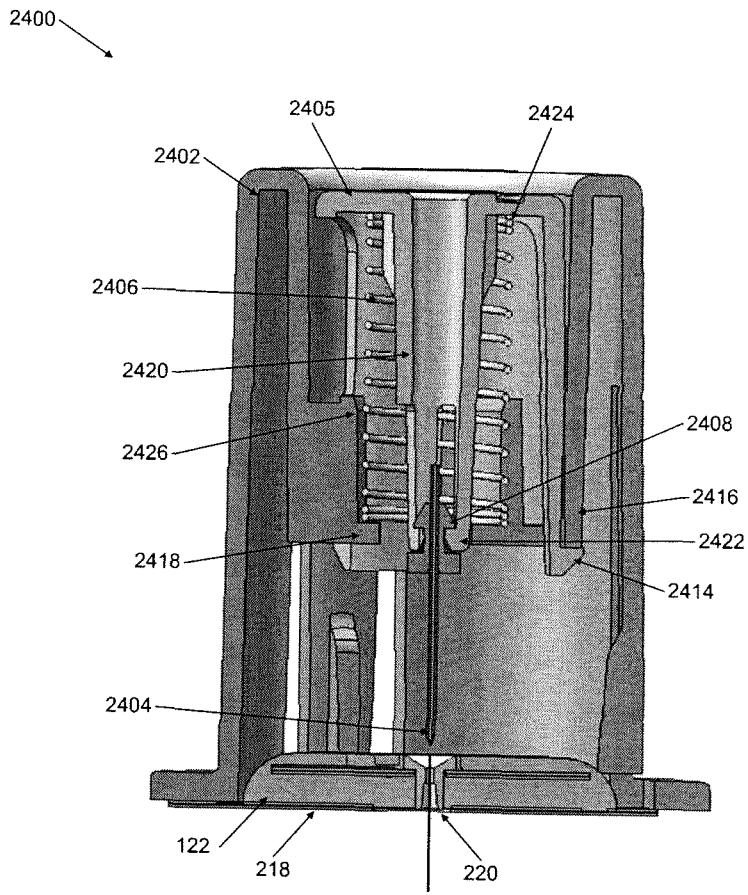
2400
2405
2424
2402
2406
2420
2426
2408
2416
2422
2418
2414
2404
122
218
220

FIG. 72N

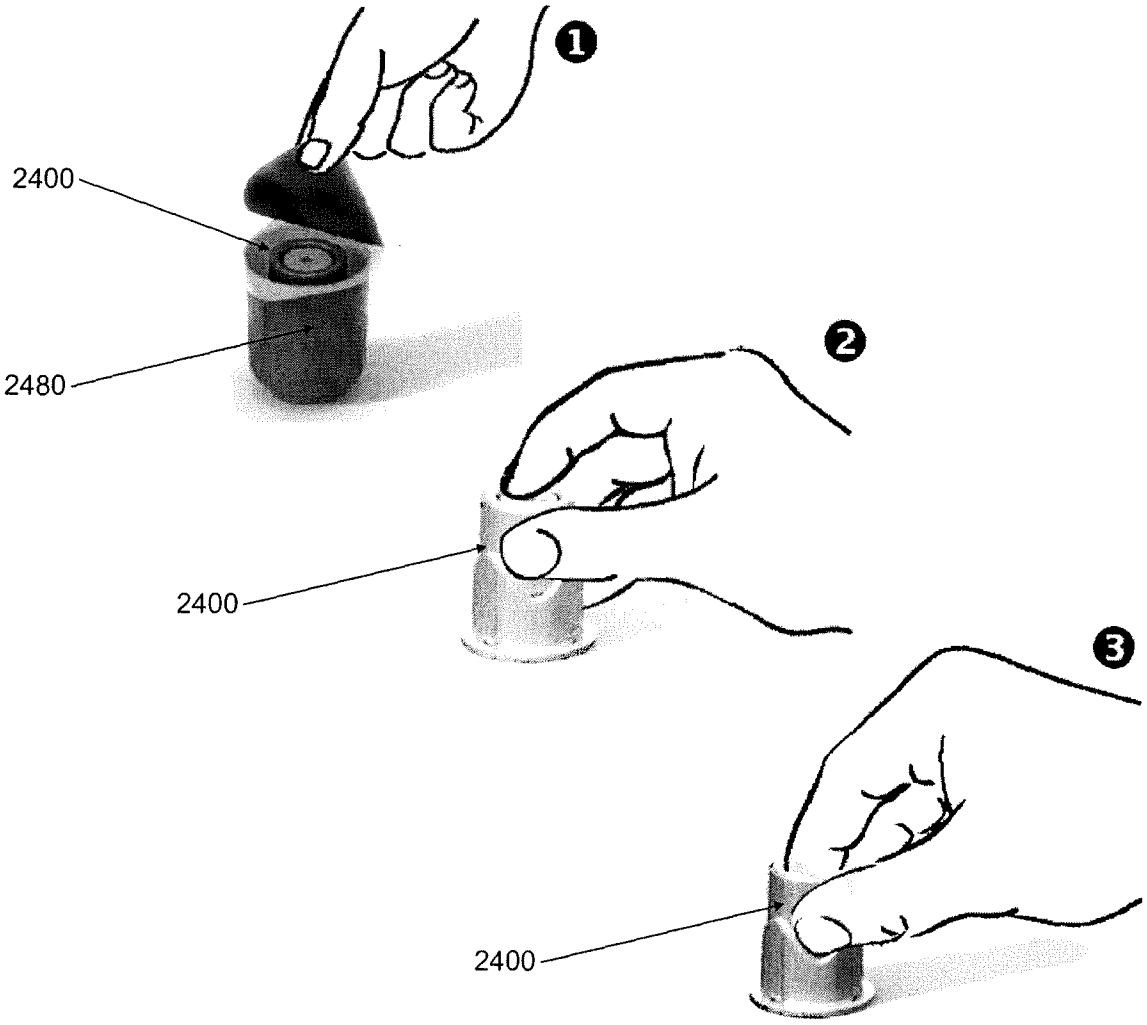

FIG. 72O

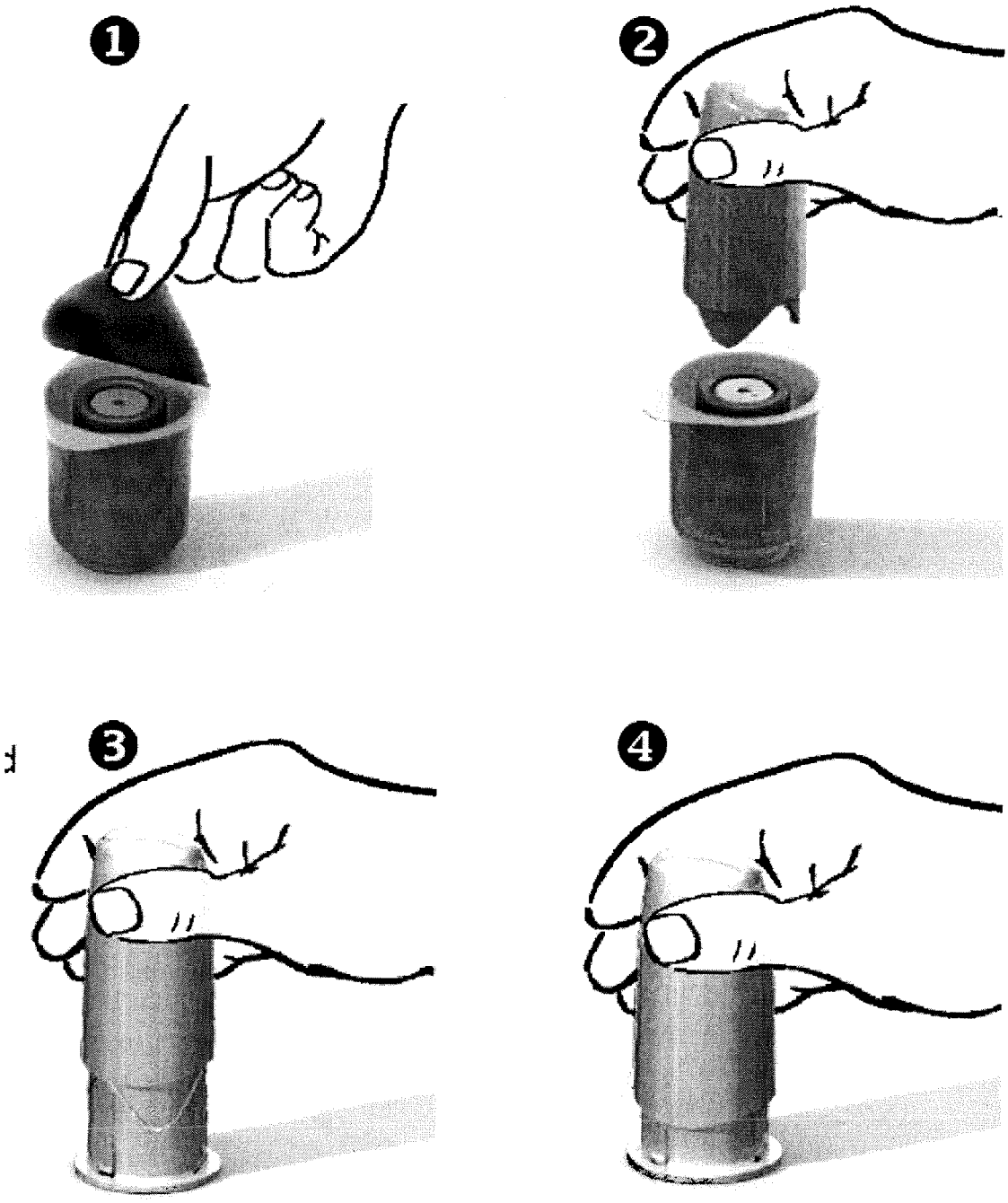

FIG. 72P

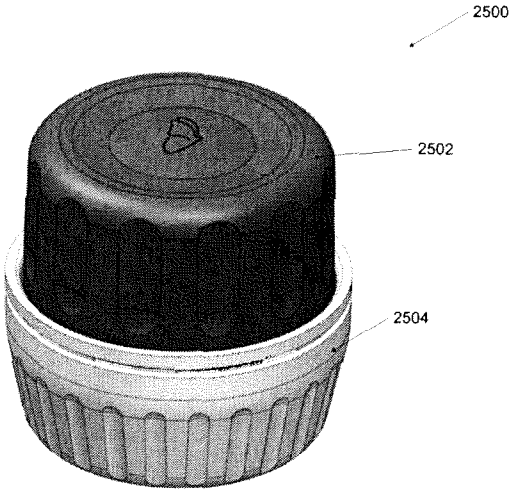

FIG. 73

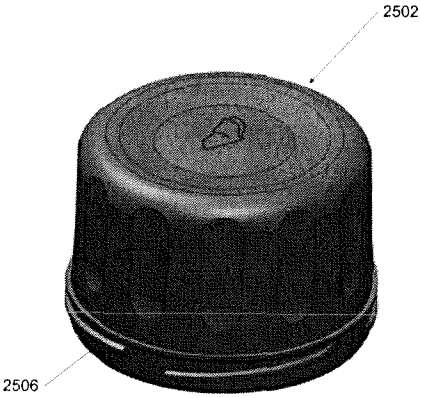

FIG. 73A

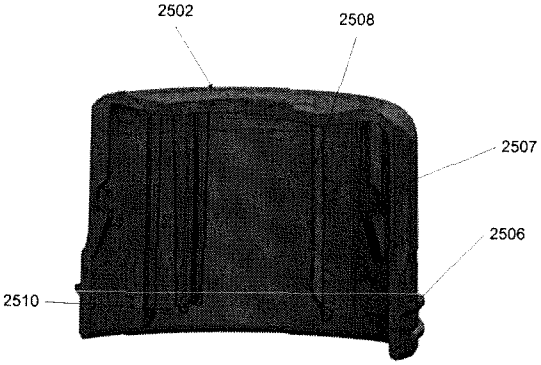

FIG. 73B

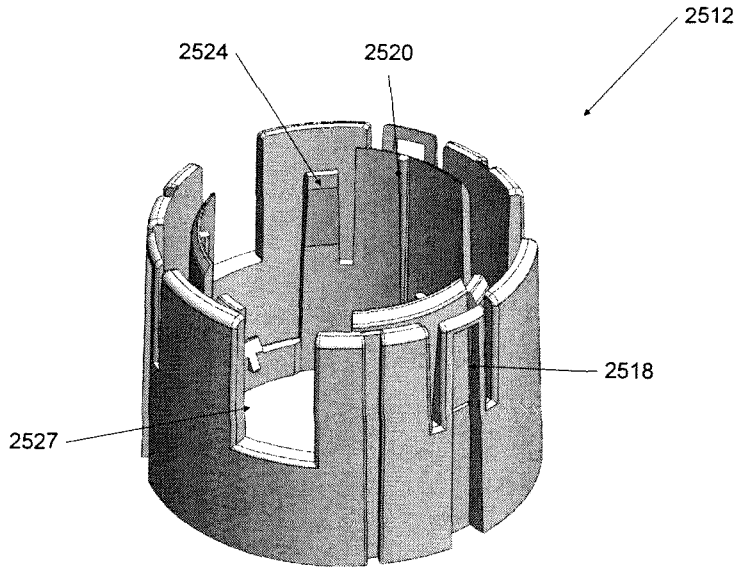

FIG. 73C

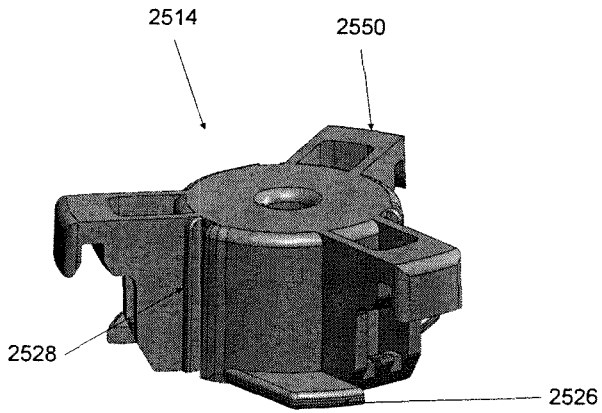

FIG. 73D

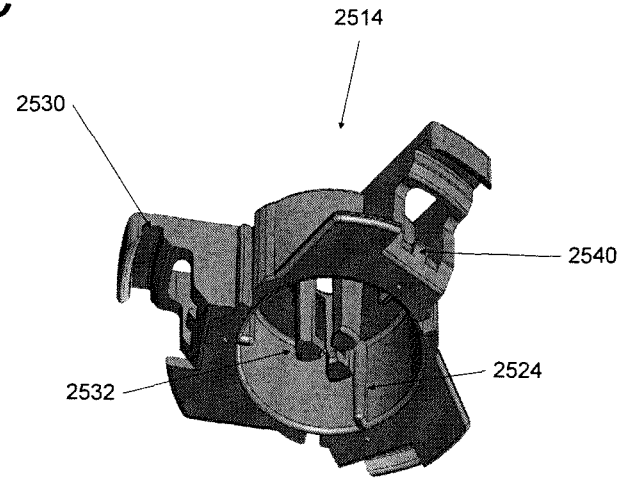

FIG. 73E

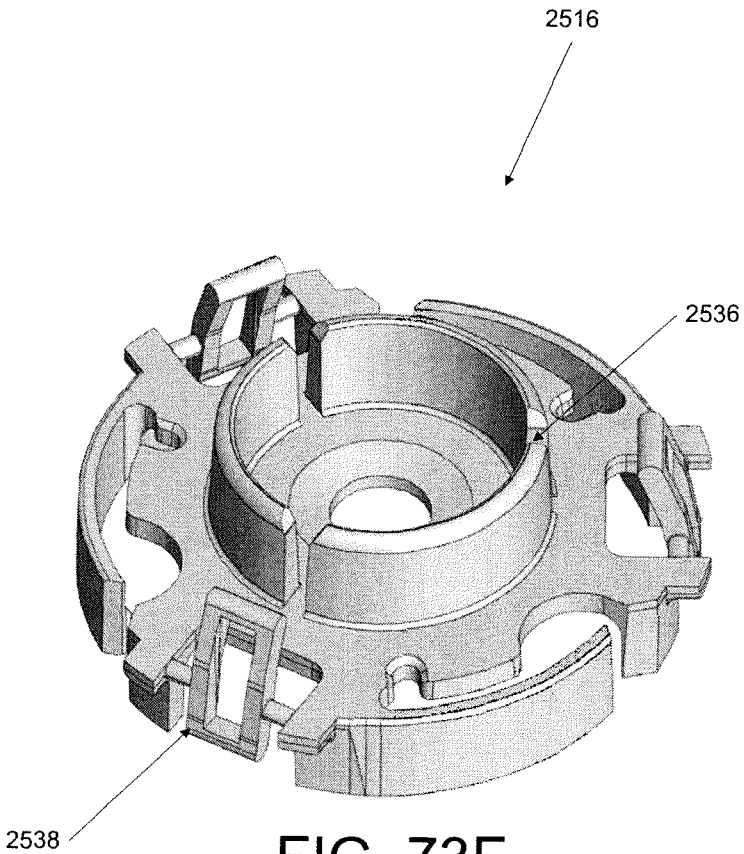

FIG. 73F

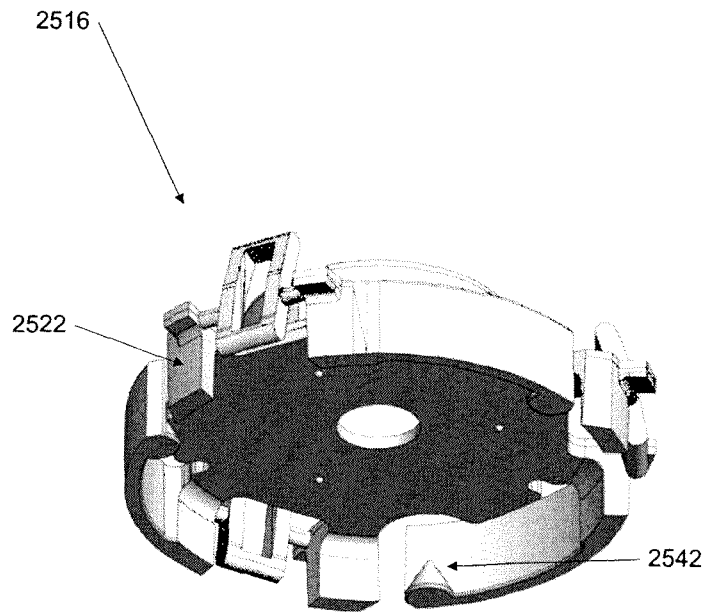

FIG. 73G

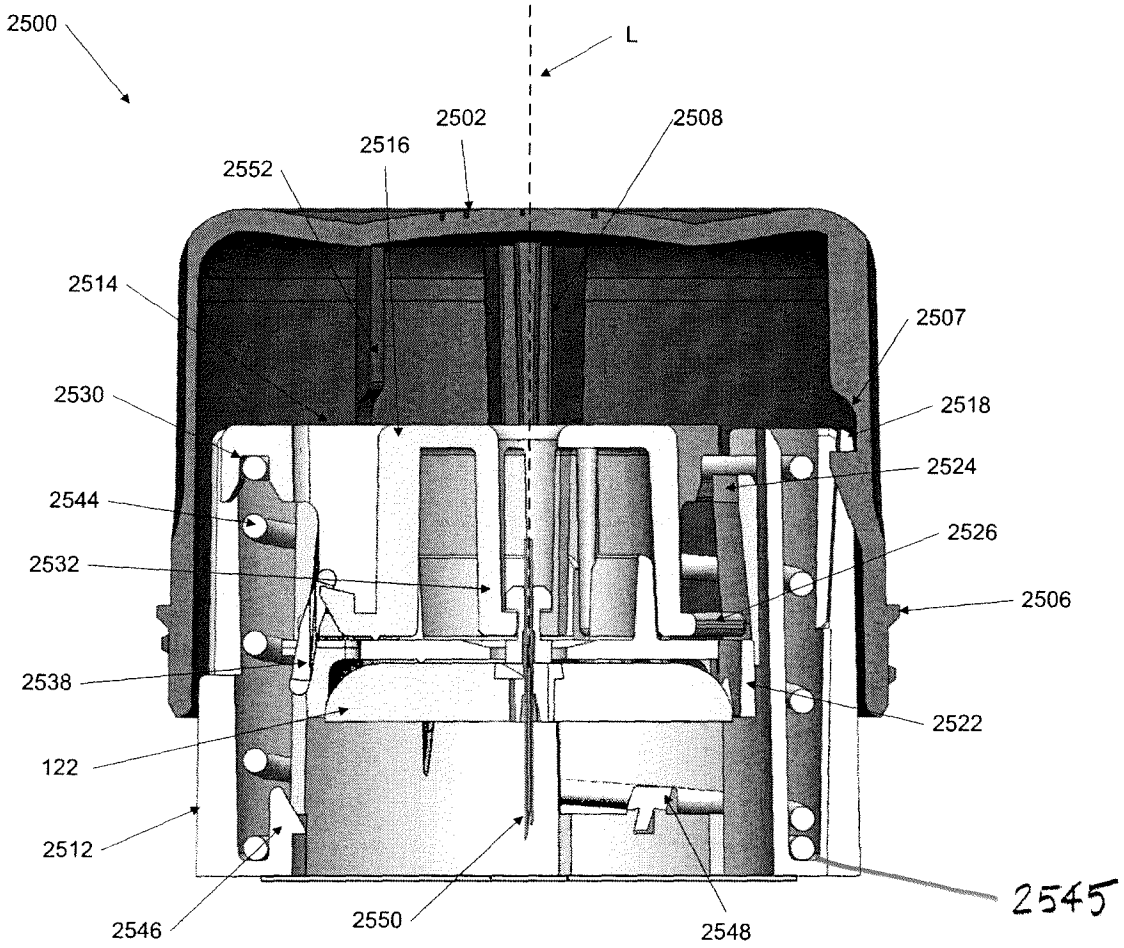
2500
L
2502
2508
2516
2552
2514
2507
2530
2518
2524
2544
2526
2532
2506
2538
2522
122
2512
2545
2546
2550
2548

FIG. 73H

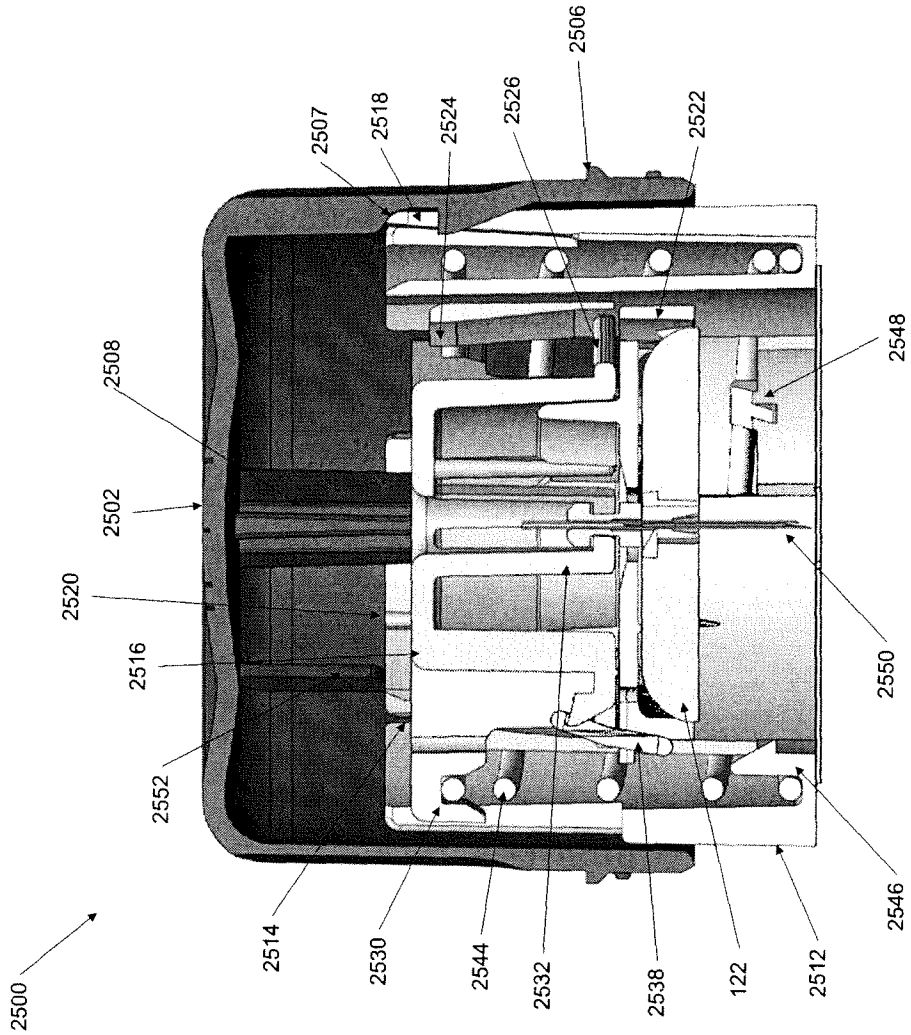
2500
2514
2530
2544
2532
2538
122
2512
2546
2552
2516
2520
2502
2508
2550
2548
2507
2518
2524
2526
2506
2522

FIG. 73I

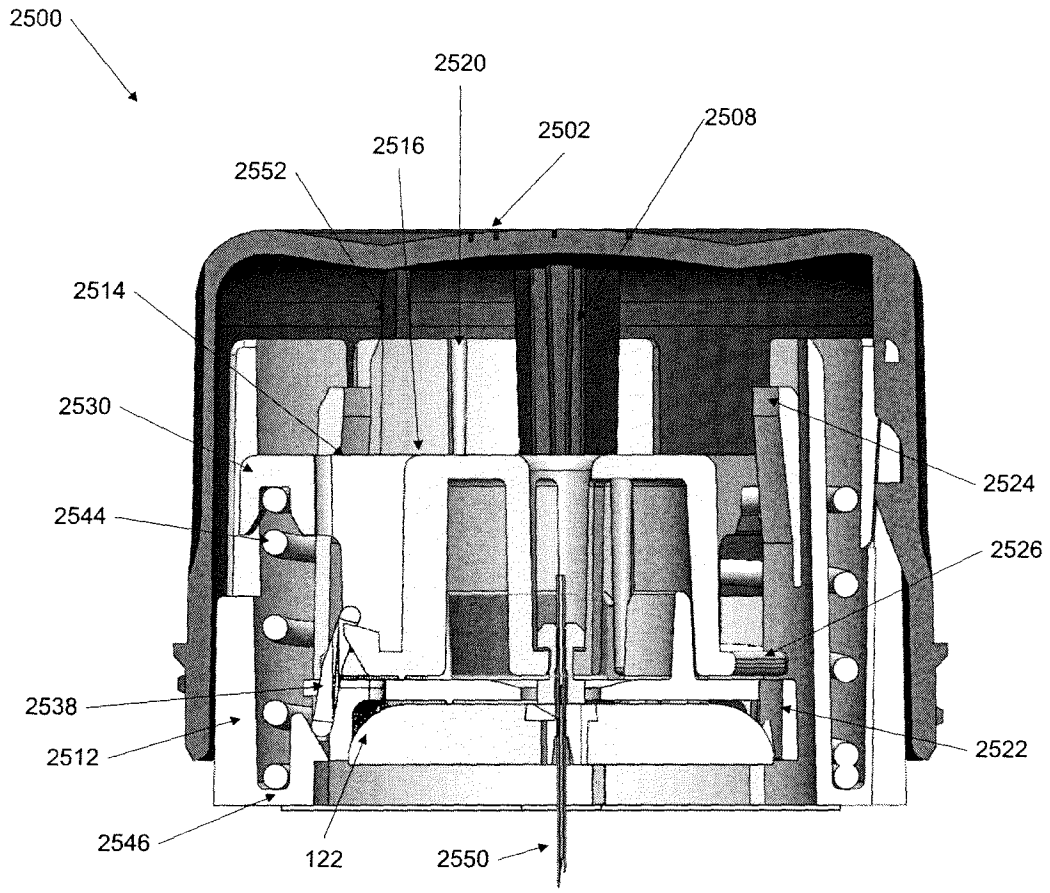
2500
2520
2502
2508
2516
2552
2514
2530
2544
2524
2526
2538
2512
2522
2546
122
2550

FIG. 73J

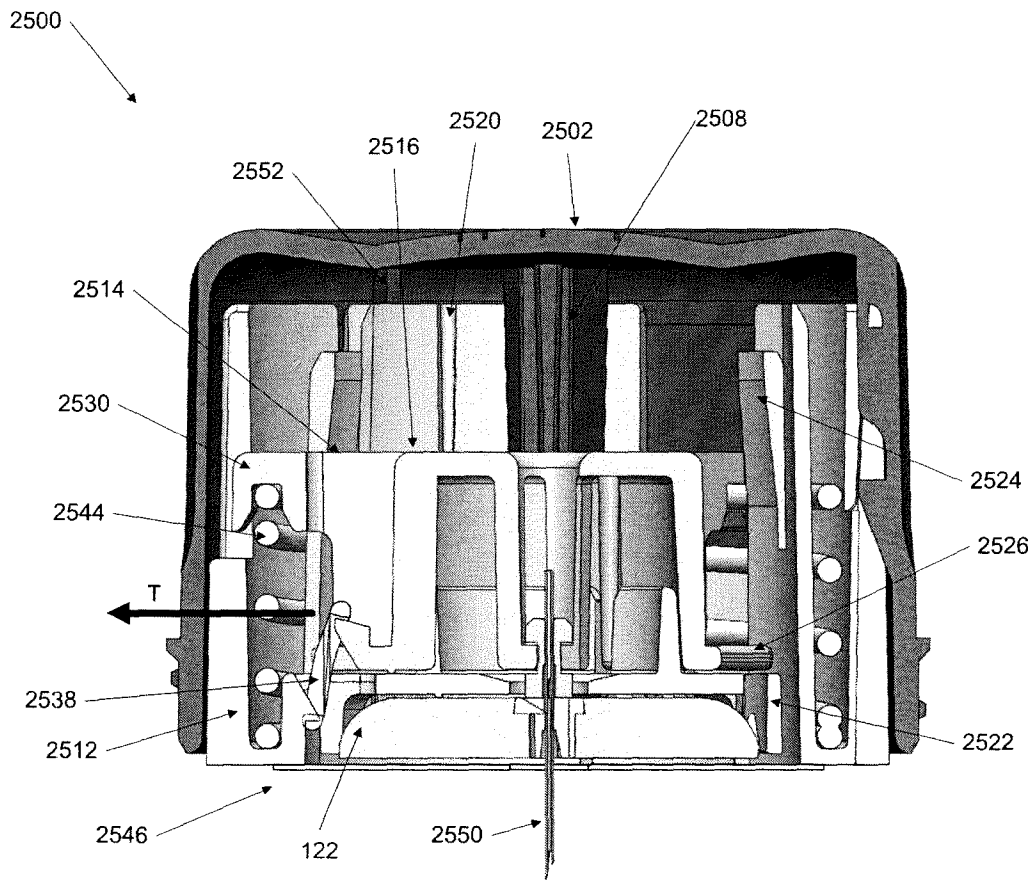
2500
2520
2502
2508
2516
2552
2514
2530
2524
2544
2526
T
2538
2512
2522
2546
122
2550

FIG. 73K

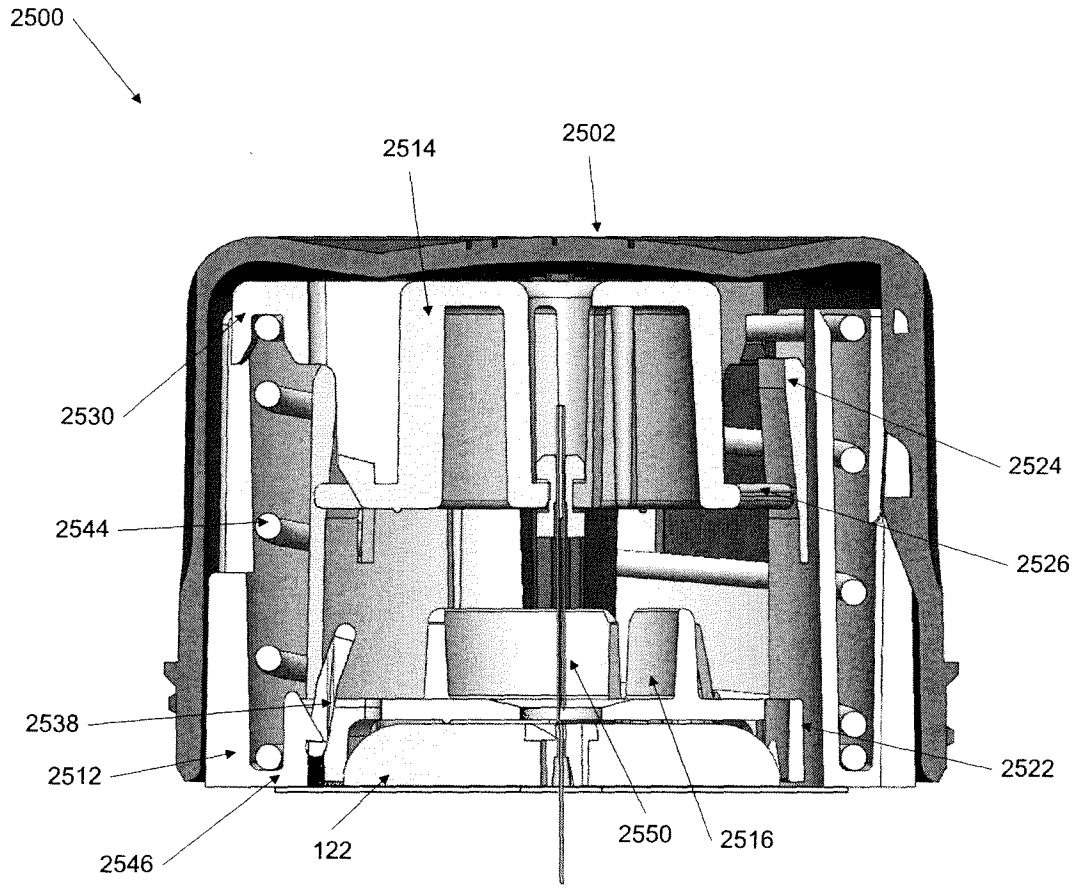
2500
2514
2502
2530
2524
2544
2526
2538
2512
2522
2546
122
2550
2516

FIG. 73L

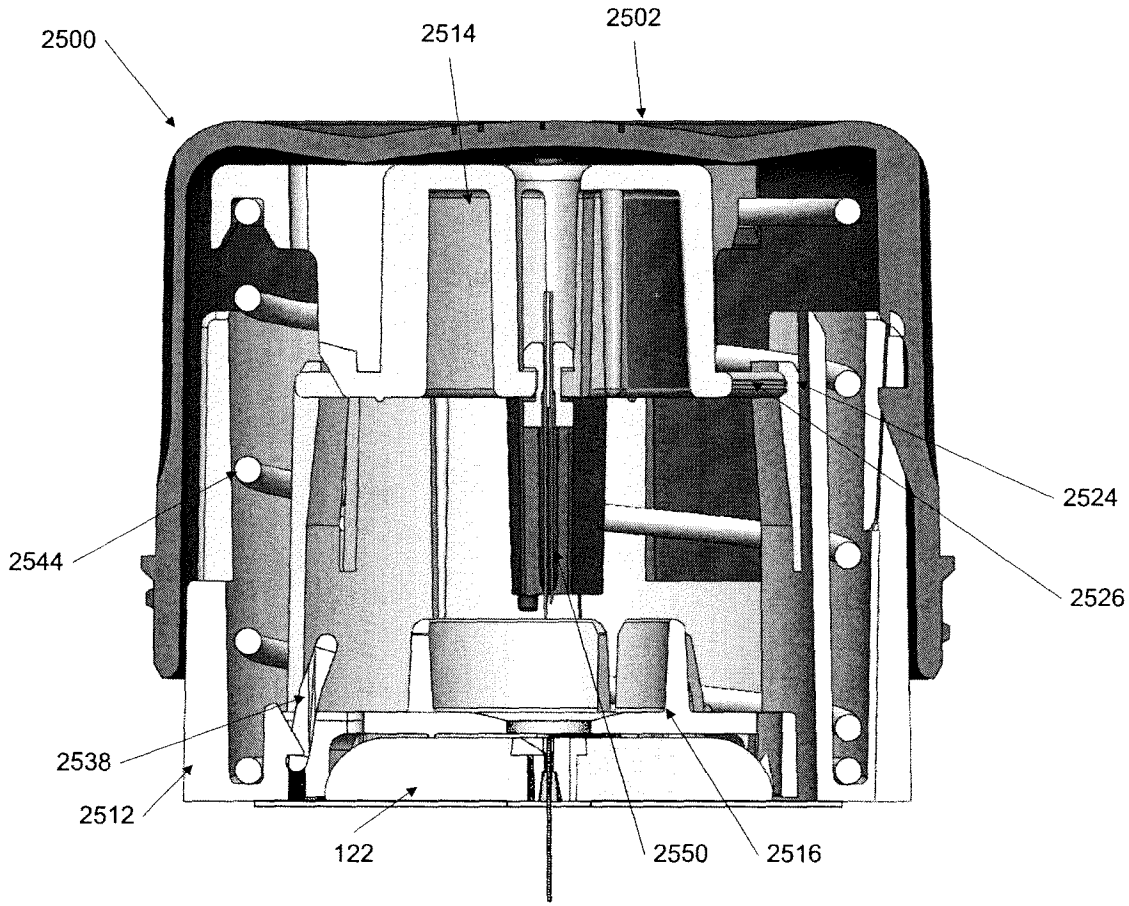

FIG. 73M

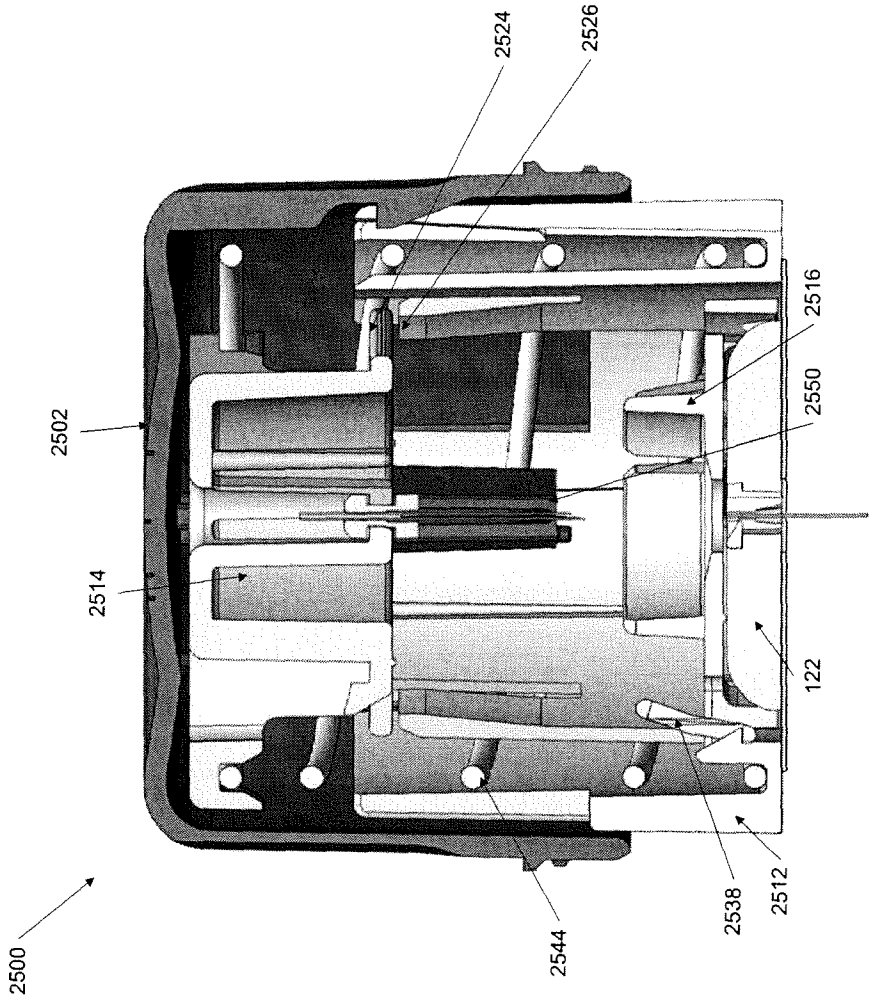

FIG. 73N

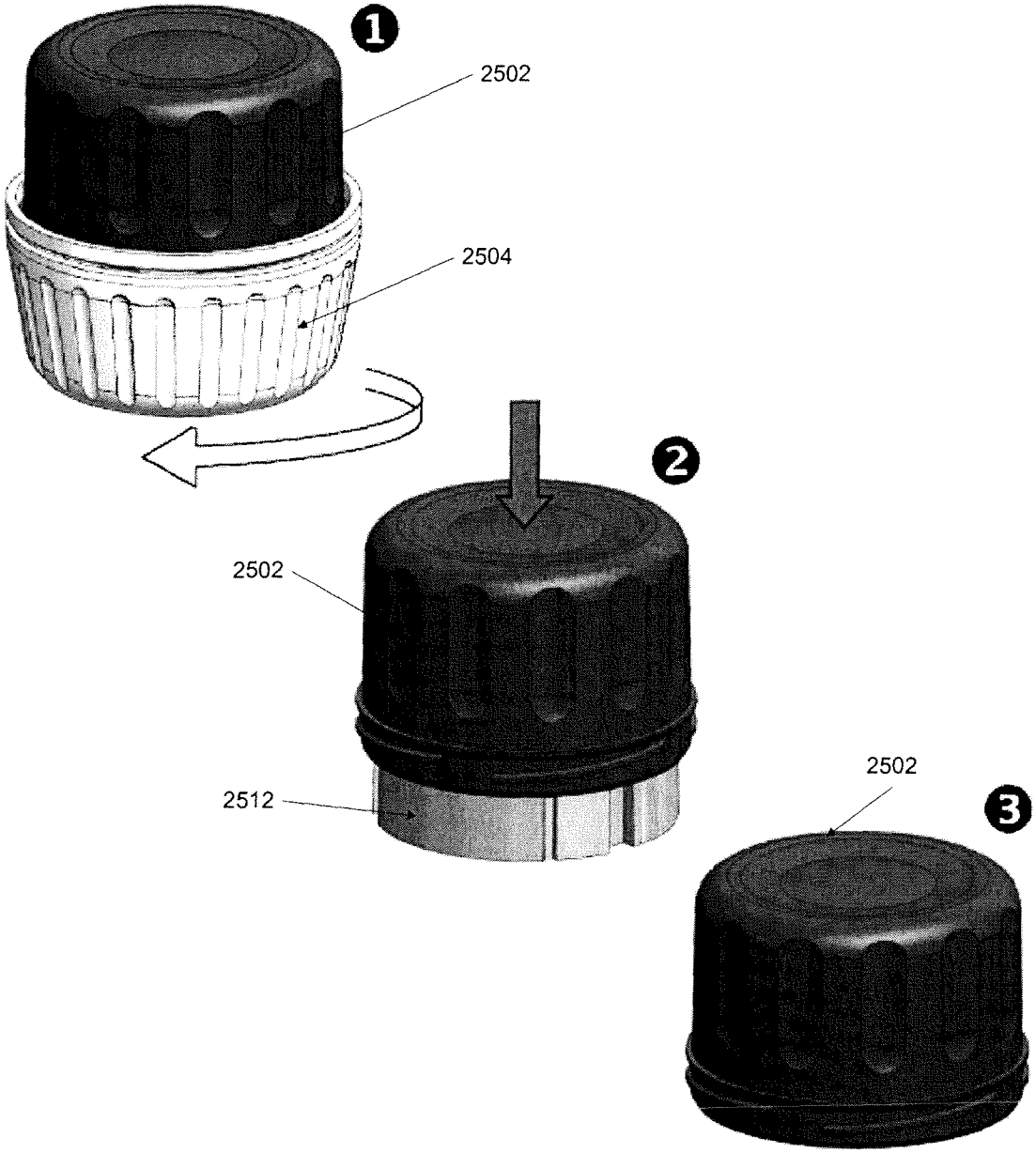

FIG. 73O

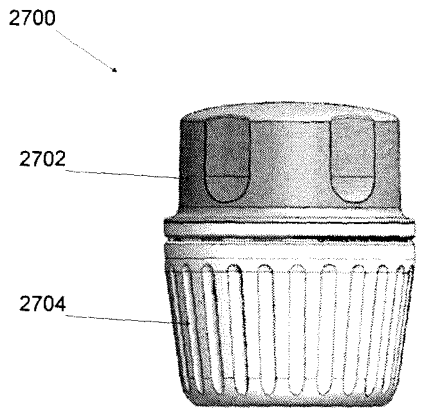

FIGURE 74

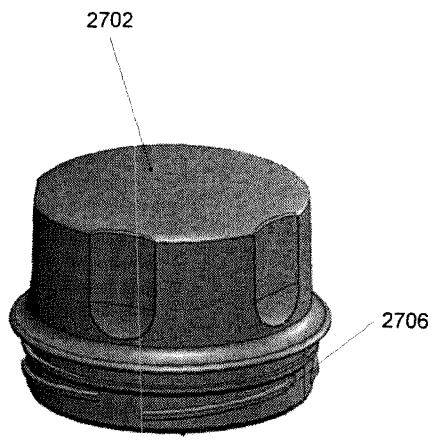

FIGURE 75

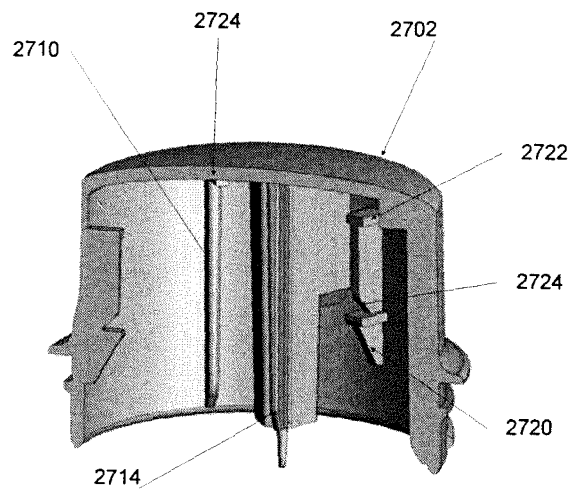

FIGURE 76

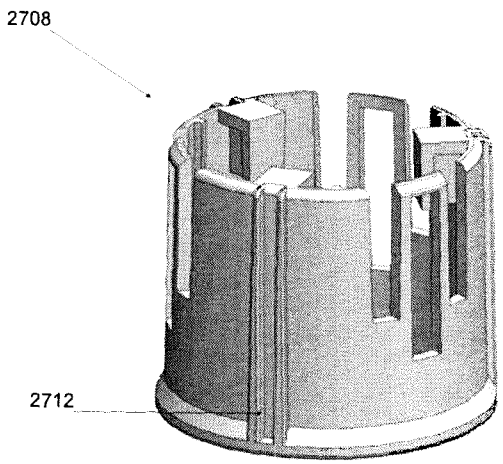

FIGURE 77

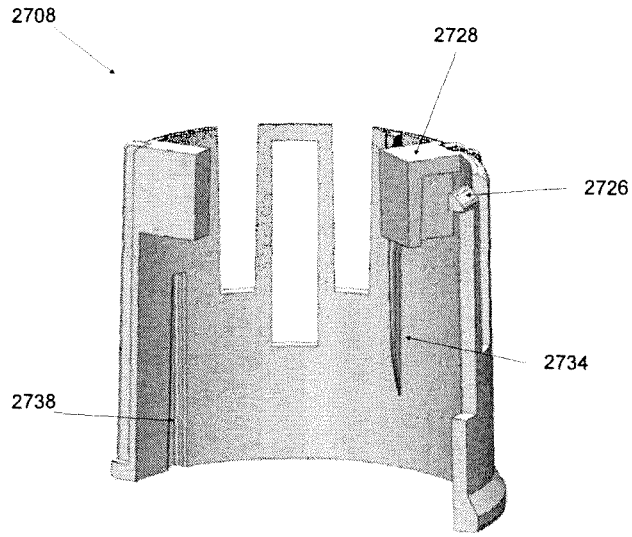

FIGURE 78

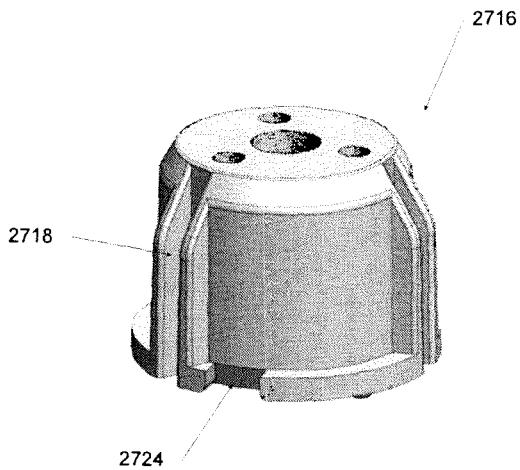

FIGURE 79

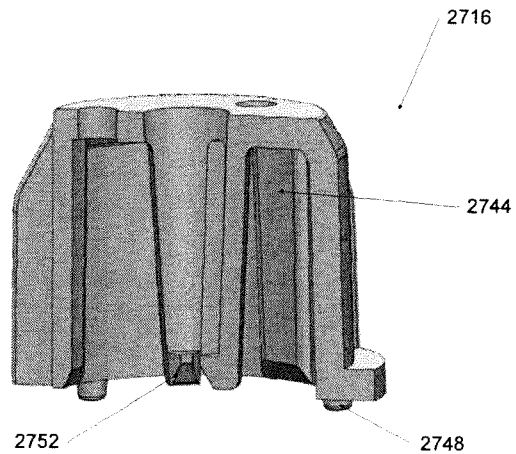

FIGURE 80

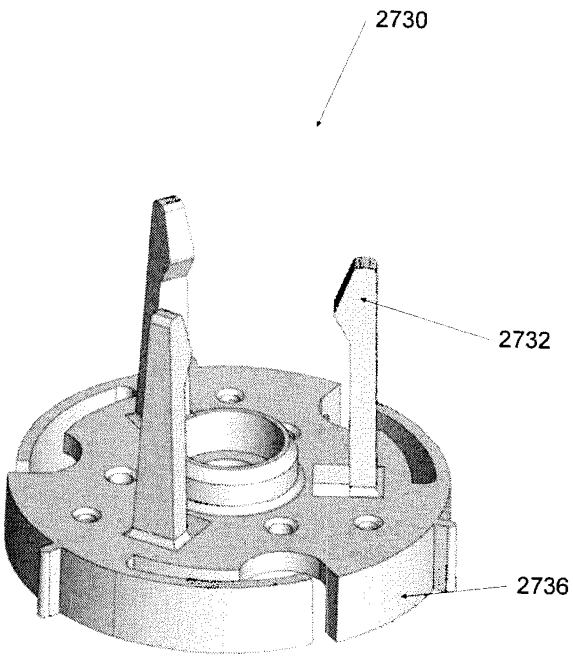

FIGURE 81

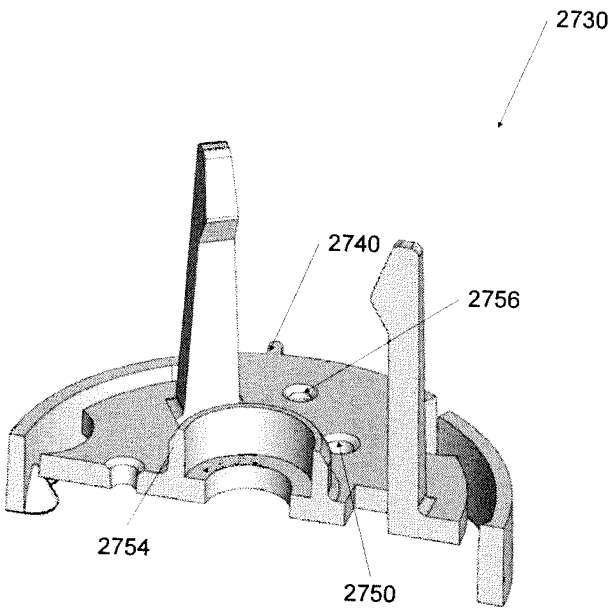

FIGURE 82

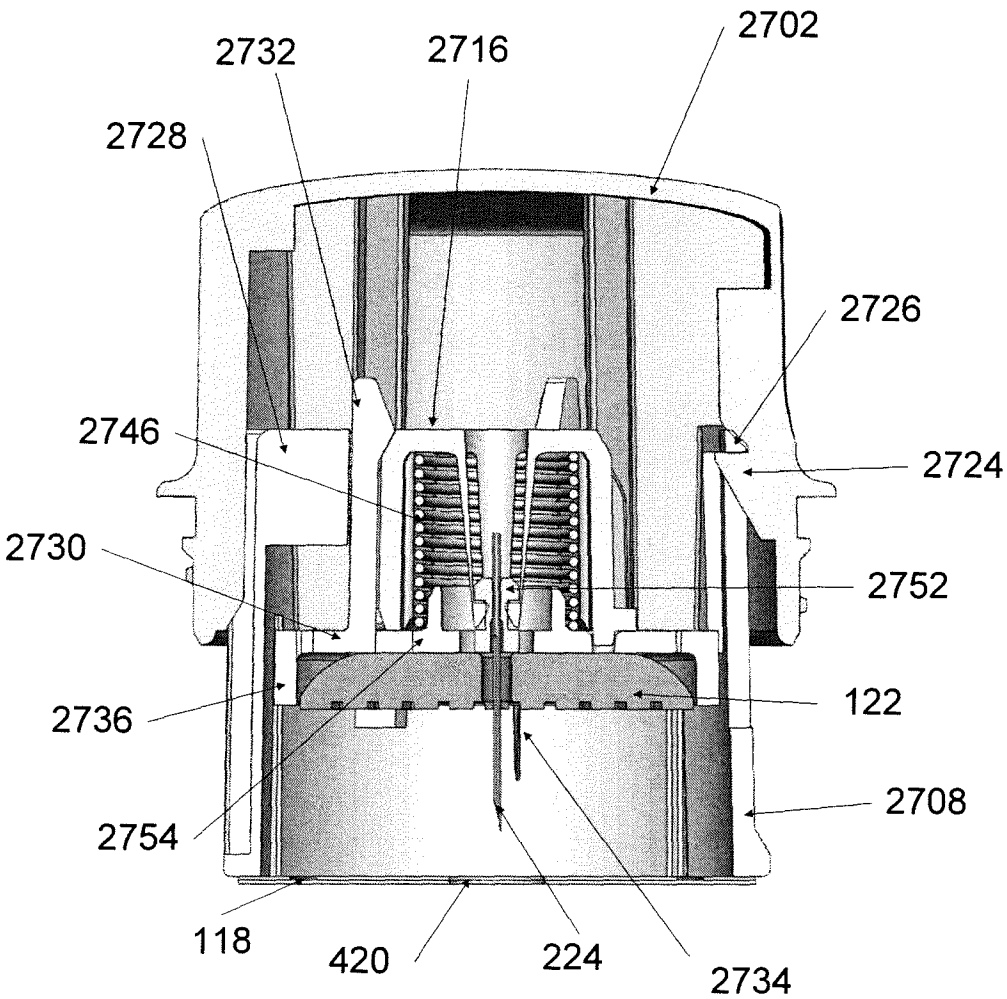
2702
2732
2716
2728
2726
2746
2724
2730
2752
2736
122
2708
2754
118
420
224
2734

FIGURE 83

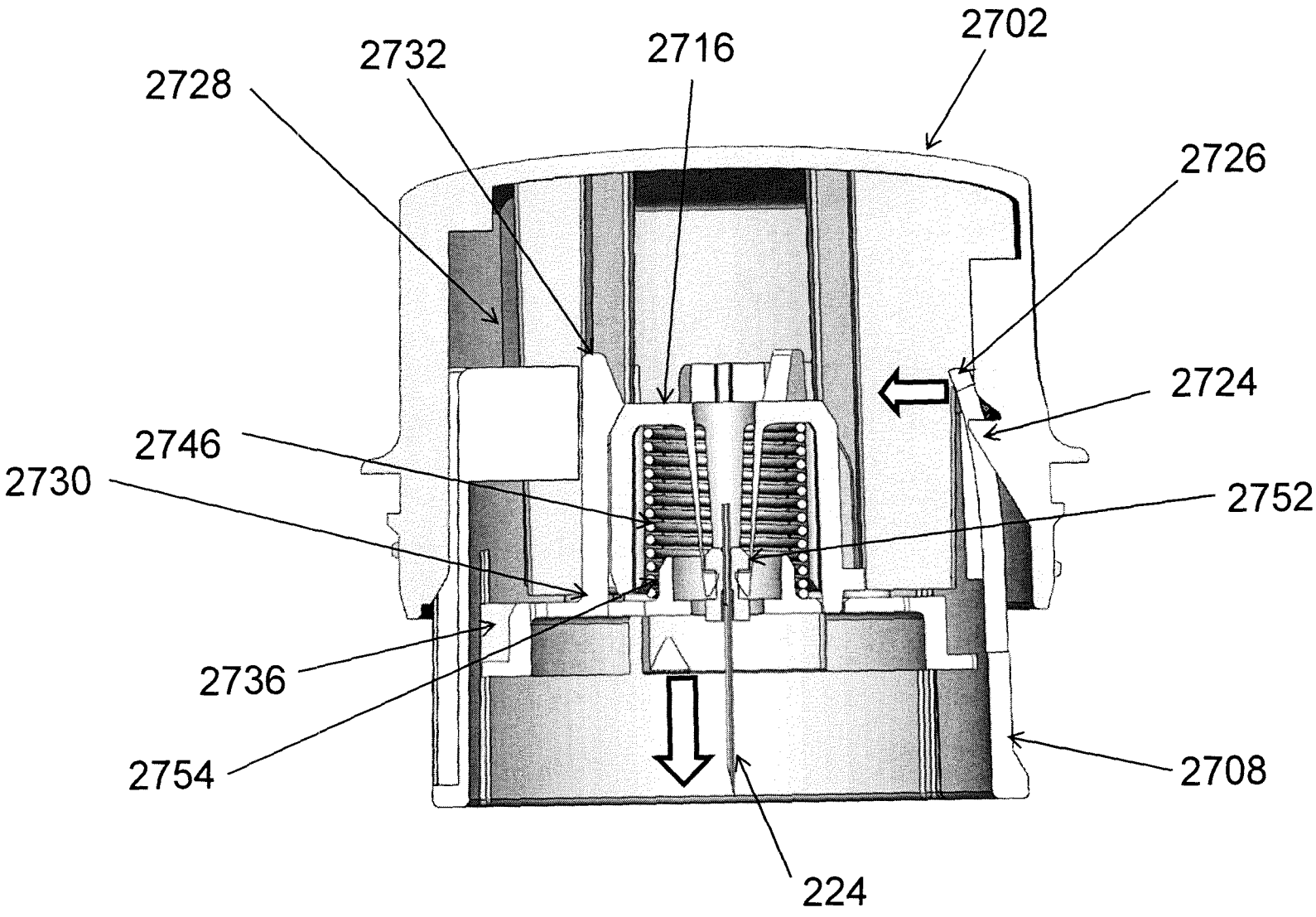
2702
2716
2732
2728
2726
2724
2746
2730
2752
2736
2754
2708
224

FIGURE 83A

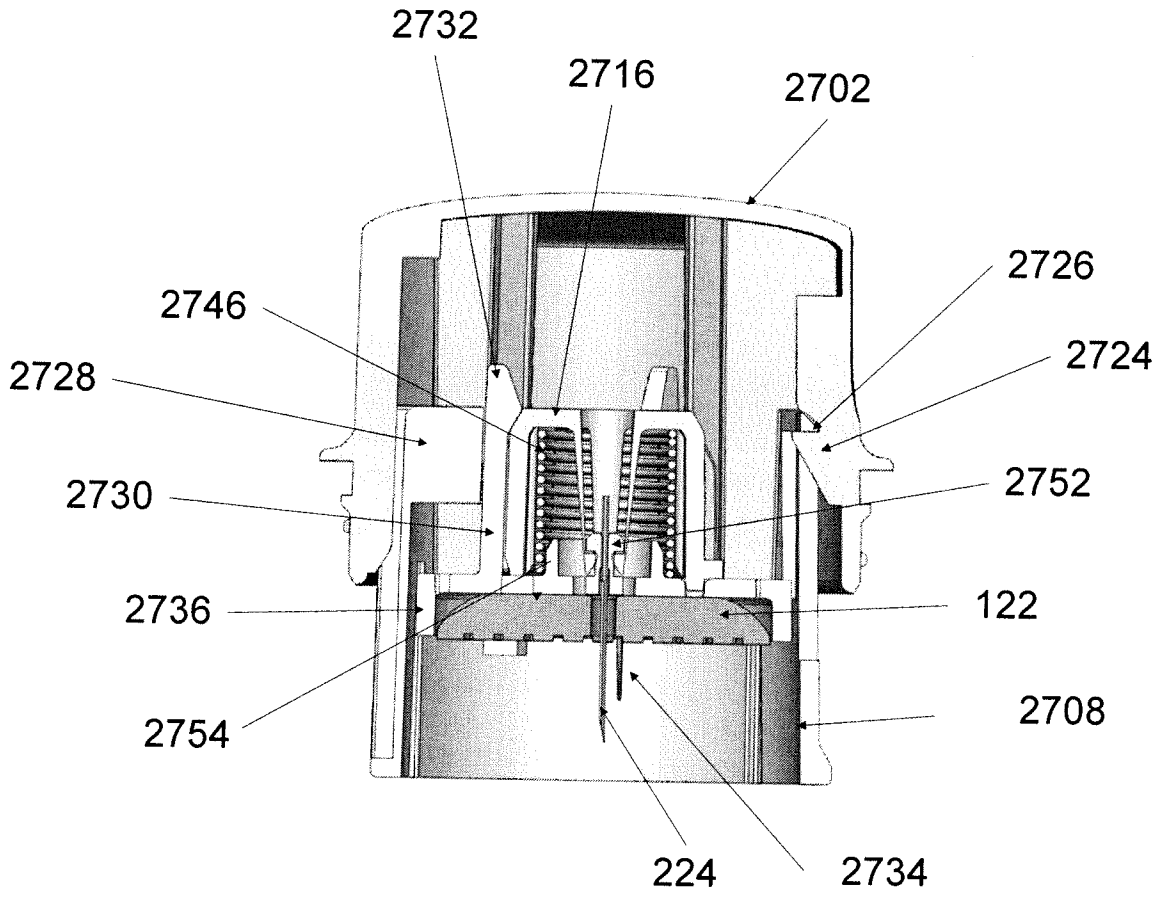
2732
2716
2702
2726
2746
2724
2728
2752
2730
2736
122
2754
2708
224
2734

FIGURE 84

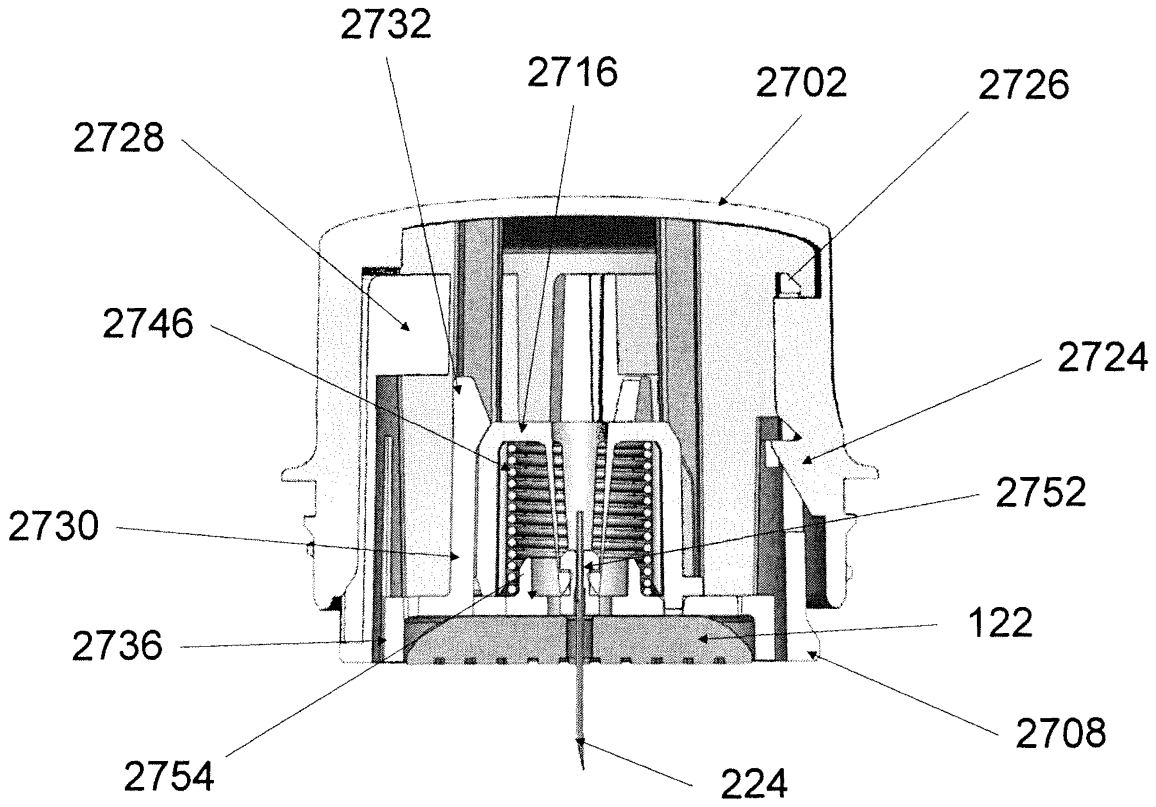
2732
2716
2702
2726
2728
2746
2724
2752
2730
122
2736
2708
2754
224

FIGURE 85

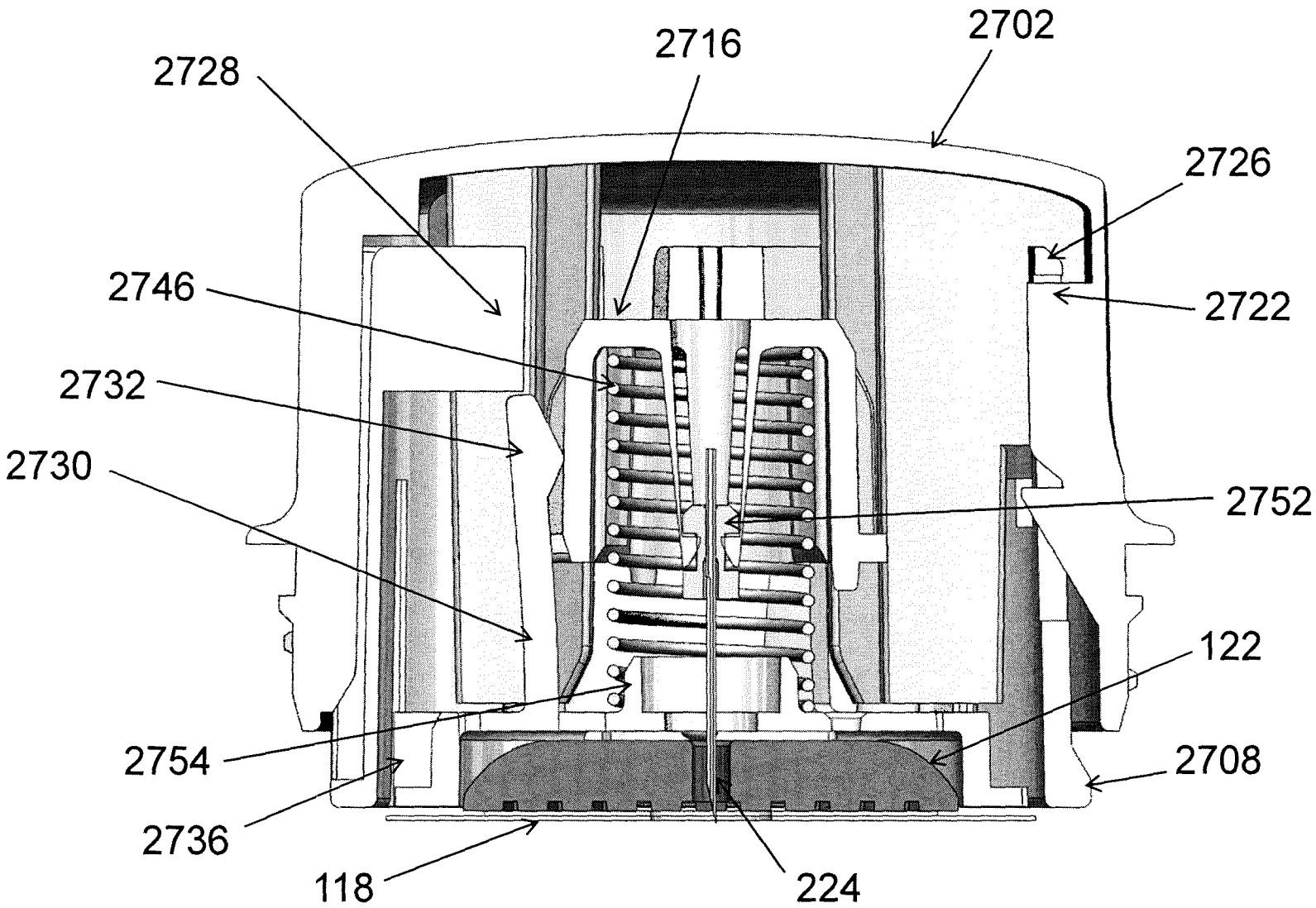
2702
2716
2728
2726
2722
2746
2732
2730
2752
122
2754
2708
2736
118
224

FIGURE 86

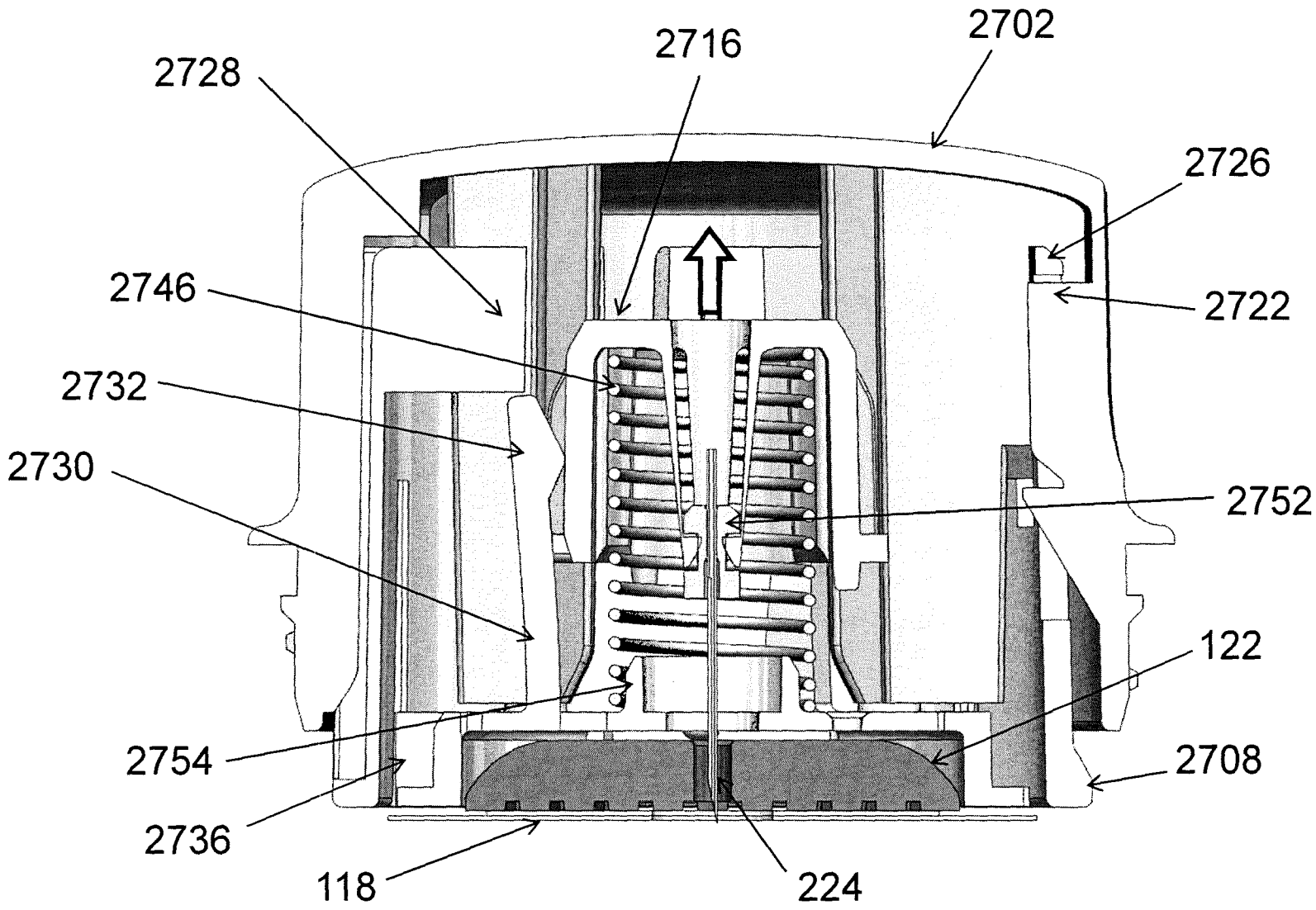
2702
2716
2728
2726
2722
2746
2732
2730
2752
122
2754
2708
2736
118
224

FIGURE 87

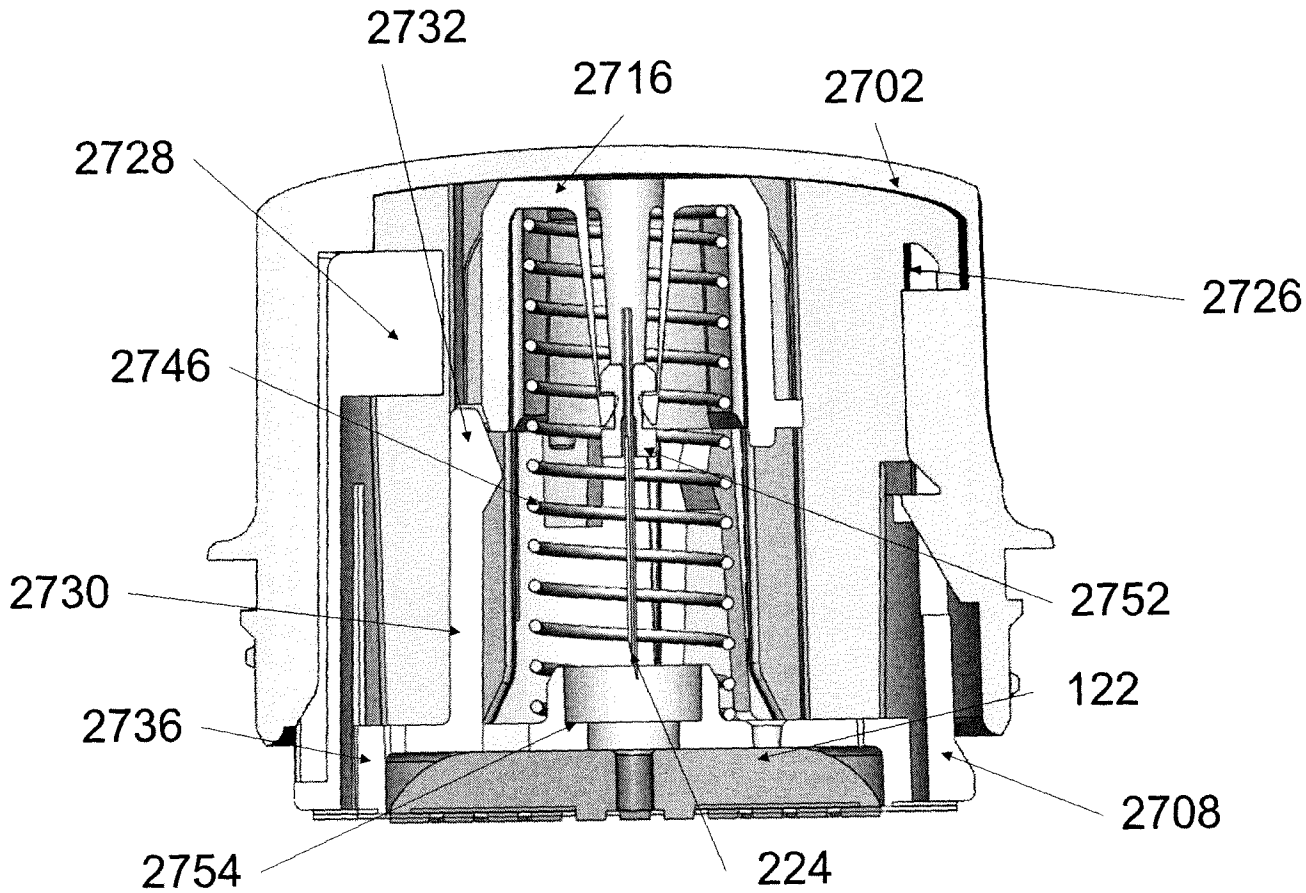
2732
2716
2702
2728
2726
2746
2752
2730
122
2736
2708
2754
224

FIGURE 88

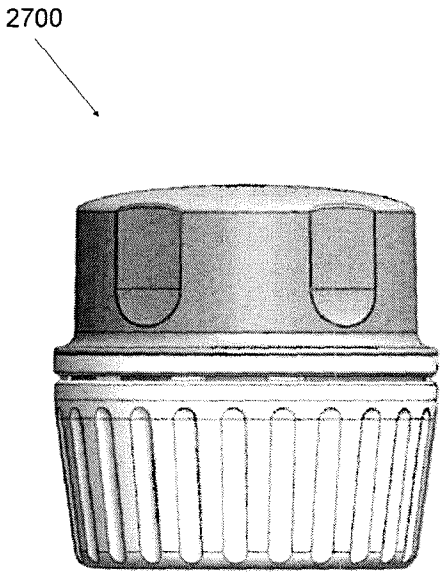

FIGURE 89

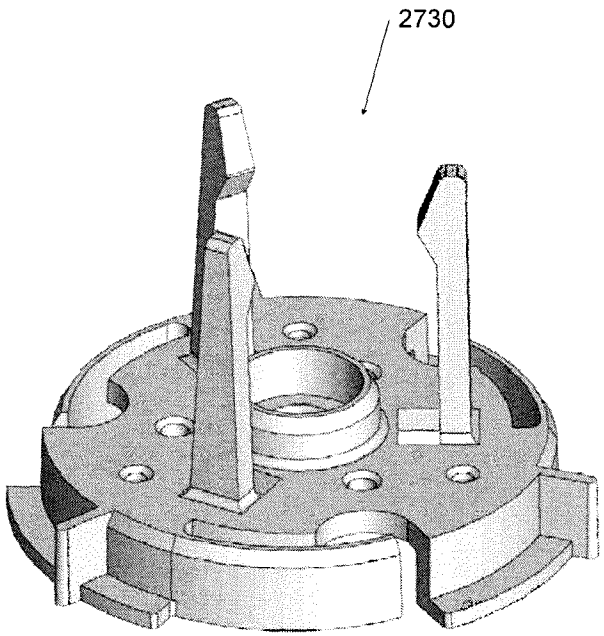

FIGURE 90

Electronic Patent Application Fee Transmittal

Application Number:	
Filing Date:	
Title of Invention:	Medical Device Inserters and Processes of Inserting and Using Medical Devices
First Named Inventor/Applicant Name:	Manuel Donnay
Filer:	Lisa A. Chiarini/Walter Egbert
Attorney Docket Number:	031312-06499

Filed as Large Entity

Provisional Filing Fees

Description	Fee Code	Quantity	Amount	Sub-Total in USD($)
Basic Filing:				
Provisional application filing	1005	1	220	220
Pages:				
Prov. Appl Size fee per 50 sheets >100	1085	2	270	540
Claims:				
Miscellaneous-Filing:				
Petition:				
Patent-Appeals-and-Interference:				
Post-Allowance-and-Post-Issuance:				

Description	Fee Code	Quantity	Amount	Sub-Total in USD($)
Extension-of-Time:				
Miscellaneous:				
			Total in USD ($)	**760**

Electronic Acknowledgement Receipt

EFS ID:	7951653
Application Number:	61361374
International Application Number:	
Confirmation Number:	1217
Title of Invention:	Medical Device Inserters and Processes of Inserting and Using Medical Devices
First Named Inventor/Applicant Name:	Manuel Donnay
Customer Number:	90259
Filer:	Lisa A. Chiarini/Walter Egbert
Filer Authorized By:	Lisa A. Chiarini
Attorney Docket Number:	031312-06499
Receipt Date:	02-JUL-2010
Filing Date:	
Time Stamp:	22:43:02
Application Type:	Provisional

Payment information:

Submitted with Payment	yes
Payment Type	Credit Card
Payment was successfully received in RAM	$760
RAM confirmation Number	5401
Deposit Account	083264
Authorized User	ABRAMSON,RONALD

The Director of the USPTO is hereby authorized to charge indicated fees and credit any overpayment as follows:

Charge any Additional Fees required under 37 C.F.R. Section 1.16 (National application filing, search, and examination fees)

Charge any Additional Fees required under 37 C.F.R. Section 1.17 (Patent application and reexamination processing fees)

Charge any Additional Fees required under 37 C.F.R. Section 1.19 (Document supply fees)

Charge any Additional Fees required under 37 C.F.R. Section 1.20 (Post Issuance fees)

Charge any Additional Fees required under 37 C.F.R. Section 1.21 (Miscellaneous fees and charges)

File Listing:

Document Number	Document Description	File Name	File Size(Bytes)/ Message Digest	Multi Part /.zip	Pages (if appl.)
1		10544USL1.pdf	16820191 05a8f5981c1bc3bf21fc60234a9a1da02cf12ff8	yes	178

Multipart Description/PDF files in .zip description

Document Description	Start	End
Provisional Cover Sheet (SB16)	1	2
Specification	3	89
Drawings-only black and white line drawings	90	178

Warnings:

Information:

2	Fee Worksheet (PTO-875)	fee-info.pdf	31247 be541956d3a366c3f6db8455220f9b01fd7a16e2	no	2

Warnings:

Information:

Total Files Size (in bytes):	16851438

This Acknowledgement Receipt evidences receipt on the noted date by the USPTO of the indicated documents, characterized by the applicant, and including page counts, where applicable. It serves as evidence of receipt similar to a Post Card, as described in MPEP 503.

<u>New Applications Under 35 U.S.C. 111</u>
If a new application is being filed and the application includes the necessary components for a filing date (see 37 CFR 1.53(b)-(d) and MPEP 506), a Filing Receipt (37 CFR 1.54) will be issued in due course and the date shown on this Acknowledgement Receipt will establish the filing date of the application.

<u>National Stage of an International Application under 35 U.S.C. 371</u>
If a timely submission to enter the national stage of an international application is compliant with the conditions of 35 U.S.C. 371 and other applicable requirements a Form PCT/DO/EO/903 indicating acceptance of the application as a national stage submission under 35 U.S.C. 371 will be issued in addition to the Filing Receipt, in due course.

<u>New International Application Filed with the USPTO as a Receiving Office</u>
If a new international application is being filed and the international application includes the necessary components for an international filing date (see PCT Article 11 and MPEP 1810), a Notification of the International Application Number and of the International Filing Date (Form PCT/RO/105) will be issued in due course, subject to prescriptions concerning national security, and the date shown on this Acknowledgement Receipt will establish the international filing date of the application.

Electronic Acknowledgement Receipt

EFS ID:	7951653
Application Number:	61361374
International Application Number:	
Confirmation Number:	1217
Title of Invention:	Medical Device Inserters and Processes of Inserting and Using Medical Devices
First Named Inventor/Applicant Name:	Manuel Donnay
Customer Number:	90259
Filer:	Lisa A. Chiarini/Walter Egbert
Filer Authorized By:	Lisa A. Chiarini
Attorney Docket Number:	031312-06499
Receipt Date:	02-JUL-2010
Filing Date:	
Time Stamp:	22:43:02
Application Type:	Provisional

Adjustment date: 07/23/2010 UEDUVIJE
07/06/2010 INTEFSW 00005401 61361374
02 FC:1085 -540.00 OP

07/23/2010 UEDUVIJE 00000015 61361374

01 FC:1085 270.00 OP

Refund Ref:
07/23/2010 0030086520

Credit Card Refund Total: $270.00

Am Exp...: XXXXXXXXXXX3008

Payment information:

Submitted with Payment	yes
Payment Type	Credit Card
Payment was successfully received in RAM	$760
RAM confirmation Number	5401
Deposit Account	083264
Authorized User	ABRAMSON,RONALD

The Director of the USPTO is hereby authorized to charge indicated fees and credit any overpayment as follows:

Charge any Additional Fees required under 37 C.F.R. Section 1.16 (National application filing, search, and examination fees)

Charge any Additional Fees required under 37 C.F.R. Section 1.17 (Patent application and reexamination processing fees)

UNITED STATES PATENT AND TRADEMARK OFFICE

UNITED STATES DEPARTMENT OF COMMERCE
United States Patent and Trademark Office
Address: COMMISSIONER FOR PATENTS
P.O. Box 1450
Alexandria, Virginia 22313-1450
www.uspto.gov

APPLICATION NUMBER	FILING or 371(c) DATE	GRP ART UNIT	FIL FEE REC'D	ATTY.DOCKET.NO	TOT CLAIMS	IND CLAIMS
61/361,374	07/02/2010		490	031312-06499		

CONFIRMATION NO. 1217

FILING RECEIPT

90259
Hughes Hubbard and Reed LLP
One Battery Park Plaza
New York, NY 10004

OC000000042726492

Date Mailed: 07/27/2010

Receipt is acknowledged of this provisional patent application. It will not be examined for patentability and will become abandoned not later than twelve months after its filing date. Any correspondence concerning the application must include the following identification information: the U.S. APPLICATION NUMBER, FILING DATE, NAME OF APPLICANT, and TITLE OF INVENTION. Fees transmitted by check or draft are subject to collection. Please verify the accuracy of the data presented on this receipt. **If an error is noted on this Filing Receipt, please submit a written request for a Filing Receipt Correction. Please provide a copy of this Filing Receipt with the changes noted thereon. If you received a "Notice to File Missing Parts" for this application, please submit any corrections to this Filing Receipt with your reply to the Notice. When the USPTO processes the reply to the Notice, the USPTO will generate another Filing Receipt incorporating the requested corrections**

Applicant(s)

Manuel Donnay, Alameda, CA;
Peter G. Robinson, Alameda, CA;

Power of Attorney:
Walter Egbert III--37317

If Required, Foreign Filing License Granted: 07/23/2010

The country code and number of your priority application, to be used for filing abroad under the Paris Convention, is **US 61/361,374**

Projected Publication Date: None, application is not eligible for pre-grant publication

Non-Publication Request: No

Early Publication Request: No

Title

Medical Device Inserters and Processes of Inserting and Using Medical Devices

PROTECTING YOUR INVENTION OUTSIDE THE UNITED STATES

Since the rights granted by a U.S. patent extend only throughout the territory of the United States and have no effect in a foreign country, an inventor who wishes patent protection in another country must apply for a patent in a specific country or in regional patent offices. Applicants may wish to consider the filing of an international application under the Patent Cooperation Treaty (PCT). An international (PCT) application generally has the same effect as a regular national patent application in each PCT-member country. The PCT process **simplifies** the filing of patent applications on the same invention in member countries, but **does not result** in a grant of "an international

patent" and does not eliminate the need of applicants to file additional documents and fees in countries where patent protection is desired.

Almost every country has its own patent law, and a person desiring a patent in a particular country must make an application for patent in that country in accordance with its particular laws. Since the laws of many countries differ in various respects from the patent law of the United States, applicants are advised to seek guidance from specific foreign countries to ensure that patent rights are not lost prematurely.

Applicants also are advised that in the case of inventions made in the United States, the Director of the USPTO must issue a license before applicants can apply for a patent in a foreign country. The filing of a U.S. patent application serves as a request for a foreign filing license. The application's filing receipt contains further information and guidance as to the status of applicant's license for foreign filing.

Applicants may wish to consult the USPTO booklet, "General Information Concerning Patents" (specifically, the section entitled "Treaties and Foreign Patents") for more information on timeframes and deadlines for filing foreign patent applications. The guide is available either by contacting the USPTO Contact Center at 800-786-9199, or it can be viewed on the USPTO website at http://www.uspto.gov/web/offices/pac/doc/general/index.html.

For information on preventing theft of your intellectual property (patents, trademarks and copyrights), you may wish to consult the U.S. Government website, http://www.stopfakes.gov. Part of a Department of Commerce initiative, this website includes self-help "toolkits" giving innovators guidance on how to protect intellectual property in specific countries such as China, Korea and Mexico. For questions regarding patent enforcement issues, applicants may call the U.S. Government hotline at 1-866-999-HALT (1-866-999-4158).

LICENSE FOR FOREIGN FILING UNDER

Title 35, United States Code, Section 184

Title 37, Code of Federal Regulations, 5.11 & 5.15

GRANTED

The applicant has been granted a license under 35 U.S.C. 184, if the phrase "IF REQUIRED, FOREIGN FILING LICENSE GRANTED" followed by a date appears on this form. Such licenses are issued in all applications where the conditions for issuance of a license have been met, regardless of whether or not a license may be required as set forth in 37 CFR 5.15. The scope and limitations of this license are set forth in 37 CFR 5.15(a) unless an earlier license has been issued under 37 CFR 5.15(b). The license is subject to revocation upon written notification. The date indicated is the effective date of the license, unless an earlier license of similar scope has been granted under 37 CFR 5.13 or 5.14.

This license is to be retained by the licensee and may be used at any time on or after the effective date thereof unless it is revoked. This license is automatically transferred to any related applications(s) filed under 37 CFR 1.53(d). This license is not retroactive.

The grant of a license does not in any way lessen the responsibility of a licensee for the security of the subject matter as imposed by any Government contract or the provisions of existing laws relating to espionage and the national security or the export of technical data. Licensees should apprise themselves of current regulations especially with respect to certain countries, of other agencies, particularly the Office of Defense Trade Controls, Department of State (with respect to Arms, Munitions and Implements of War (22 CFR 121-128)); the Bureau of Industry and

Security, Department of Commerce (15 CFR parts 730-774); the Office of Foreign AssetsControl, Department of Treasury (31 CFR Parts 500+) and the Department of Energy.

NOT GRANTED

No license under 35 U.S.C. 184 has been granted at this time, if the phrase "IF REQUIRED, FOREIGN FILING LICENSE GRANTED" DOES NOT appear on this form. Applicant may still petition for a license under 37 CFR 5.12, if a license is desired before the expiration of 6 months from the filing date of the application. If 6 months has lapsed from the filing date of this application and the licensee has not received any indication of a secrecy order under 35 U.S.C. 181, the licensee may foreign file the application pursuant to 37 CFR 5.15(b).