US 20040204687A1

(19) United States

(12) Patent Application Publication

(10) Pub. No.: US 2004/0204687 A1

(43) Pub. Date: Oct. 14, 2004

Mogensen et al.

(54) INJECTOR DEVICE FOR PLACING A SUBCUTANEOUS INFUSION SET

(76) Inventors: **Lasse Wesseltoft Mogensen**, Soborg (DK); **Grete Kornerup**, Ringsted (DK); **Magnus Walter Goransson**, Malmo (DK)

Correspondence Address:
BRINKS HOFER GILSON & LIONE
P.O. BOX 10395
CHICAGO, IL 60610 (US)

(21) Appl. No.: **10/687,568**

(22) Filed: **Oct. 15, 2003**

Related U.S. Application Data

(63) Continuation-in-part of application No. PCT/DK02/00640, filed on Sep. 27, 2002.

(30) **Foreign Application Priority Data**

Sep. 27, 2001 (DK) ..... PA 2001 01411

Publication Classification

(51) **Int. Cl.**[7] **A61M 5/00**

(52) **U.S. Cl.** **604/181**

(57) **ABSTRACT**

An injector device for transcutaneously placing a hollow cannula of a subcutaneous infusion set is disclosed. The injector device includes a plunger slidably received within the device housing for movement between an advanced position and a retracted position, the plunger having an insertion needle secured thereto by a stable connection preventing loss of the insertion needle during use of the device. The insertion needle receives and supports the cannula of the subcutaneous infusion set in a position with the cannula oriented for transcutaneous placement upon movement of the plunger from the retracted position to the retracted position.

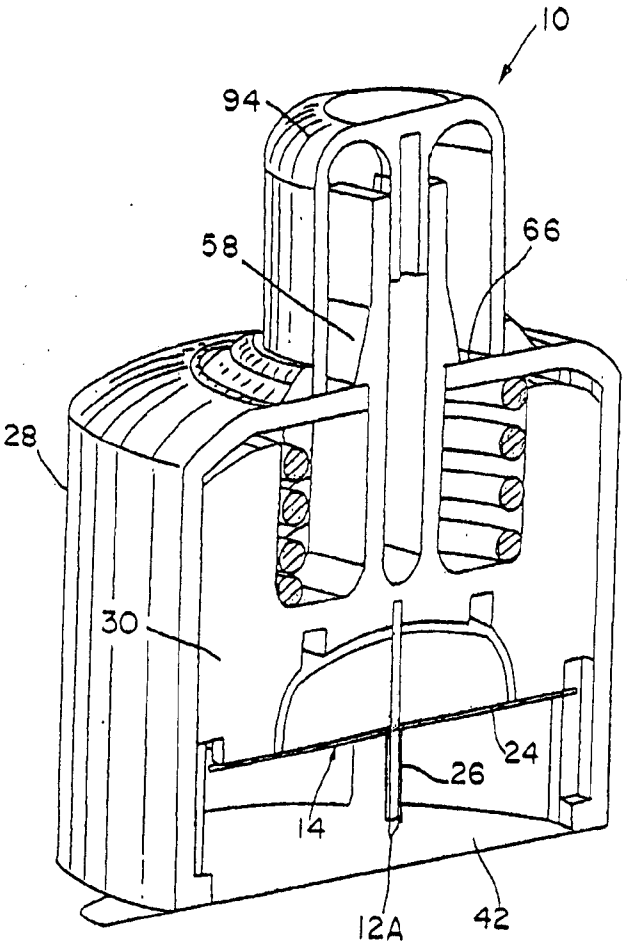

DEXCOM
EXHIBIT 1041

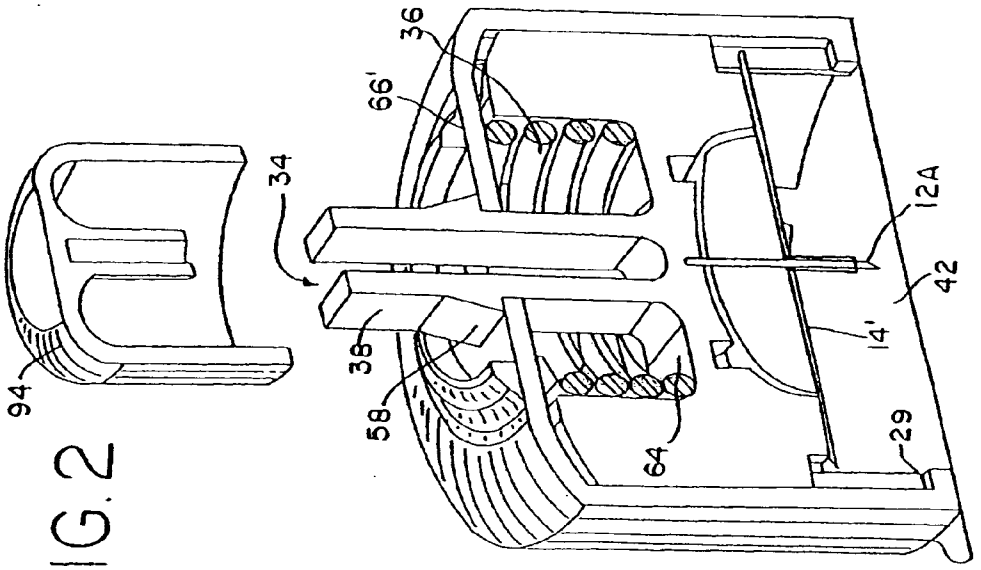

FIG. 2

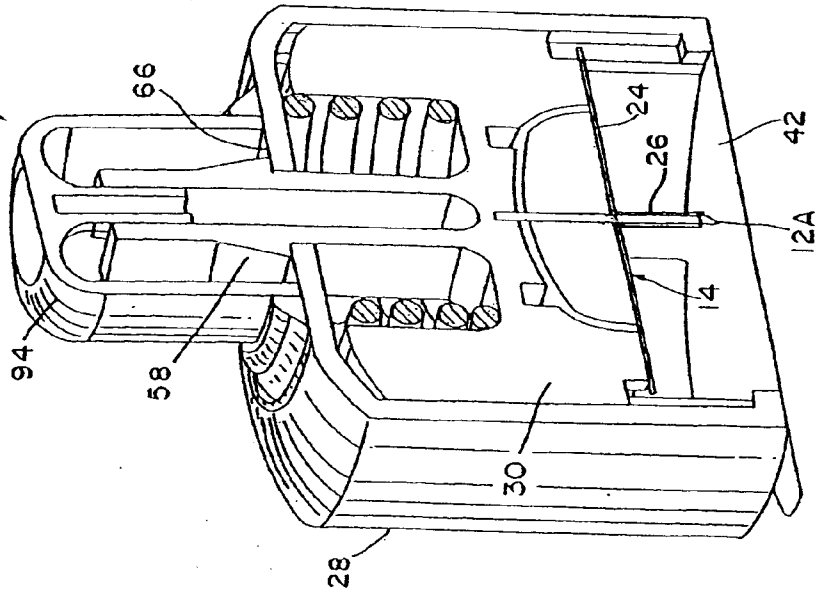

FIG. 1

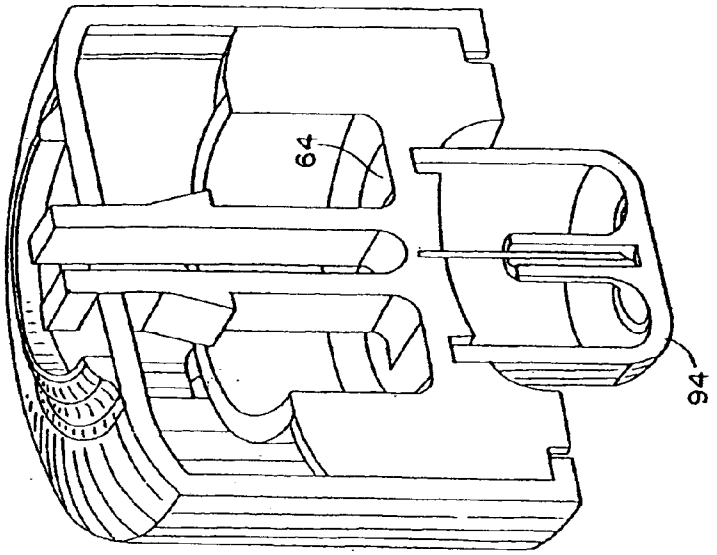

FIG. 4

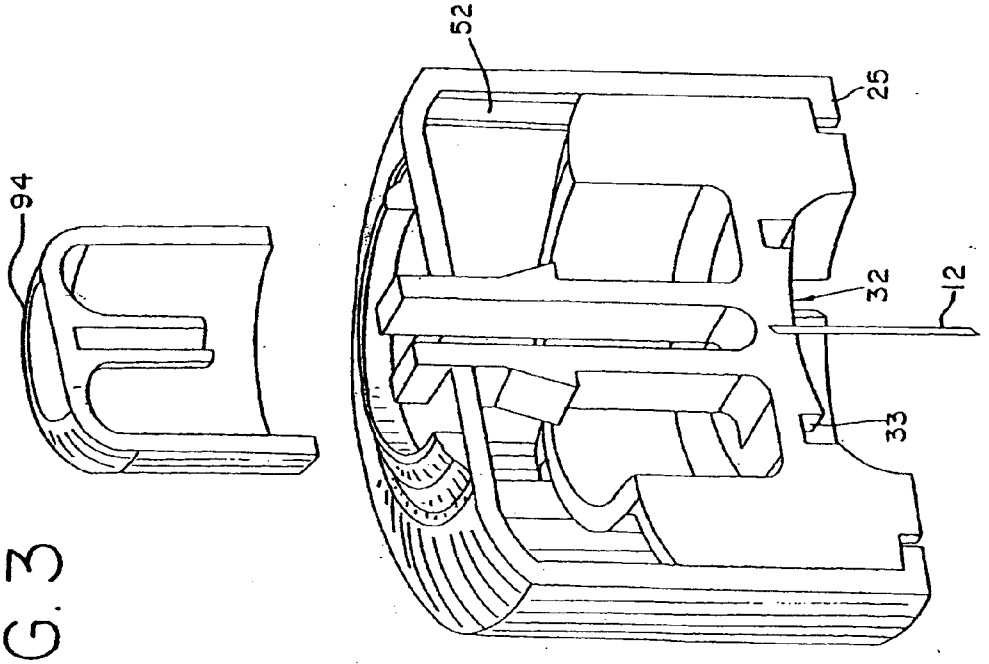

FIG. 3

FIG. 5

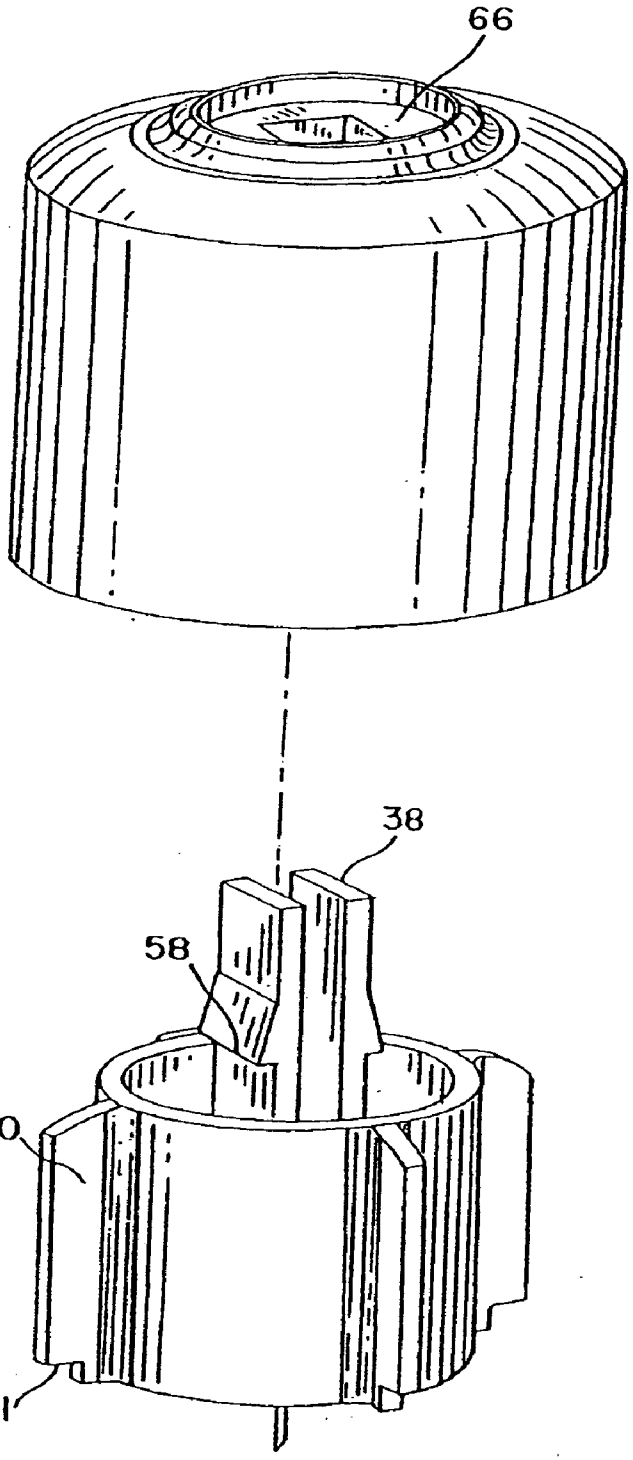

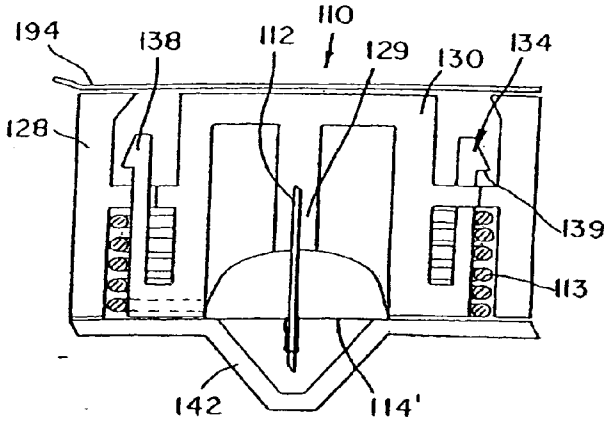

FIG. 6

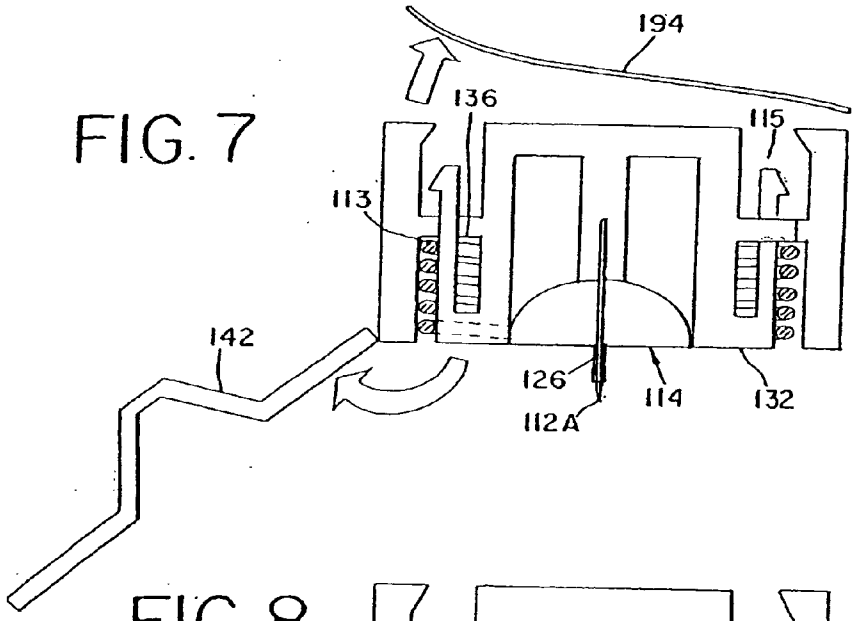

FIG. 7

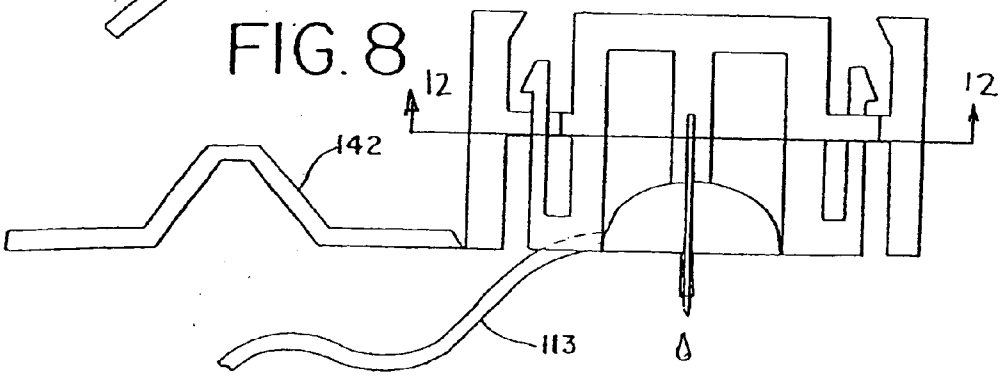

FIG. 8

FIG. 9

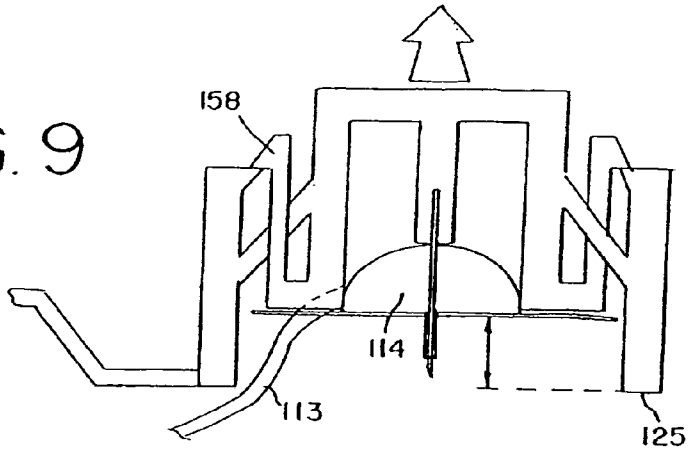

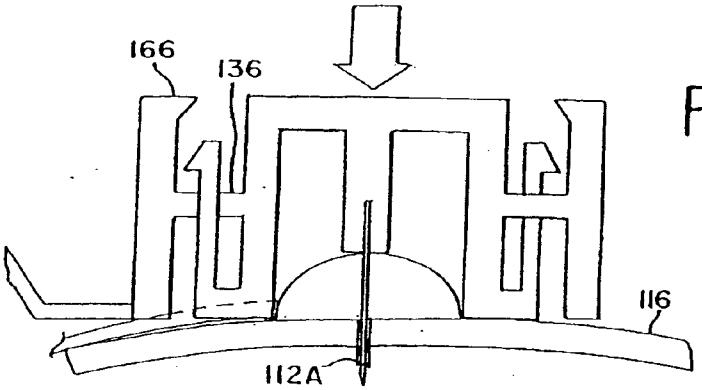

FIG. 10

FIG. 11

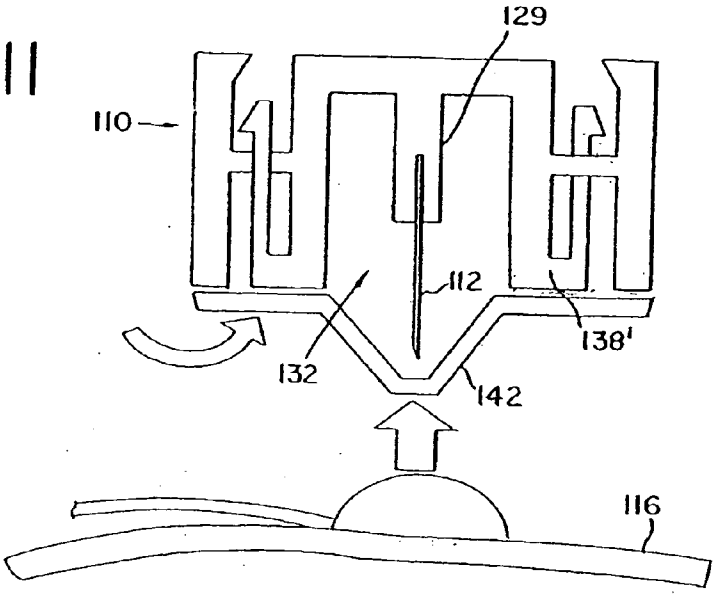

FIG. 12

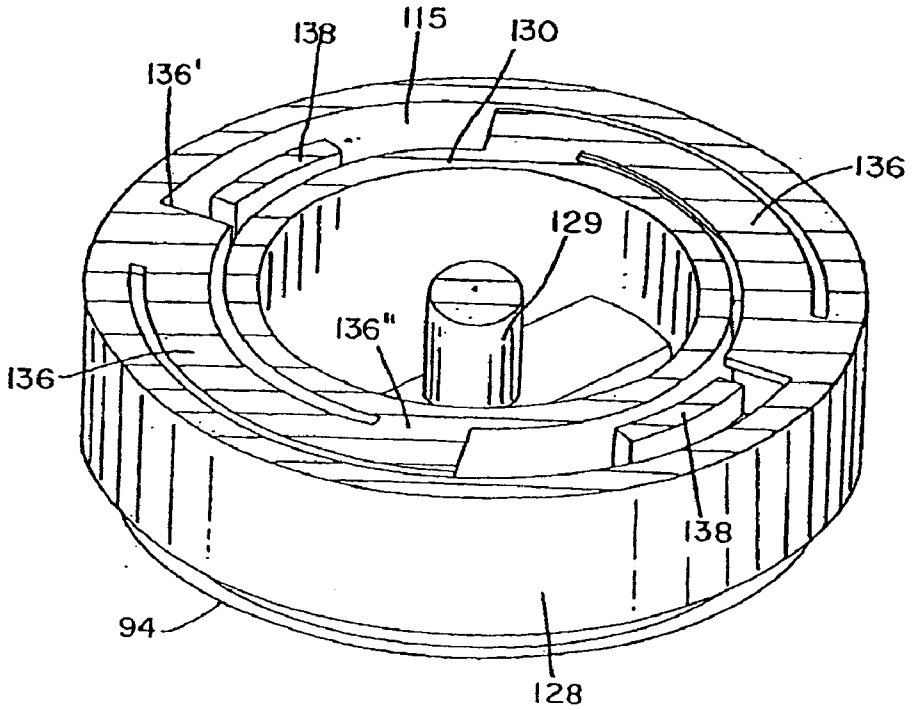

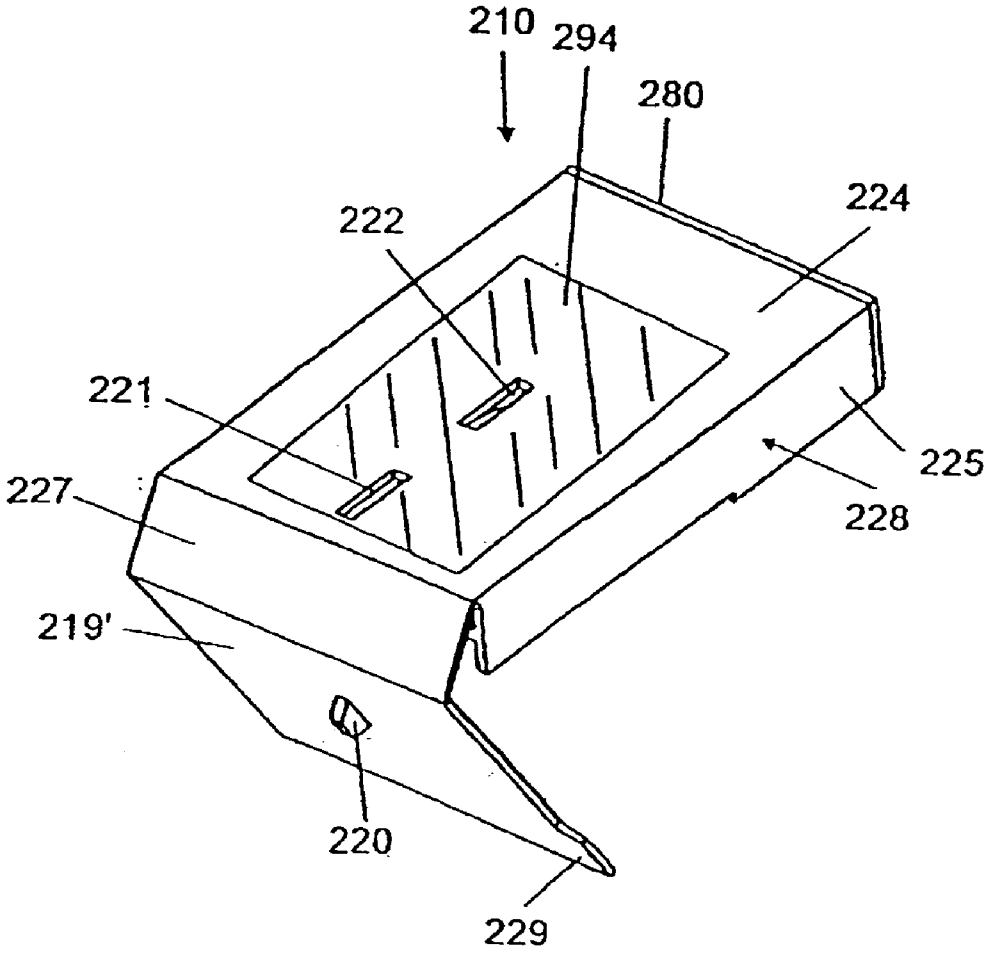

Fig. 13

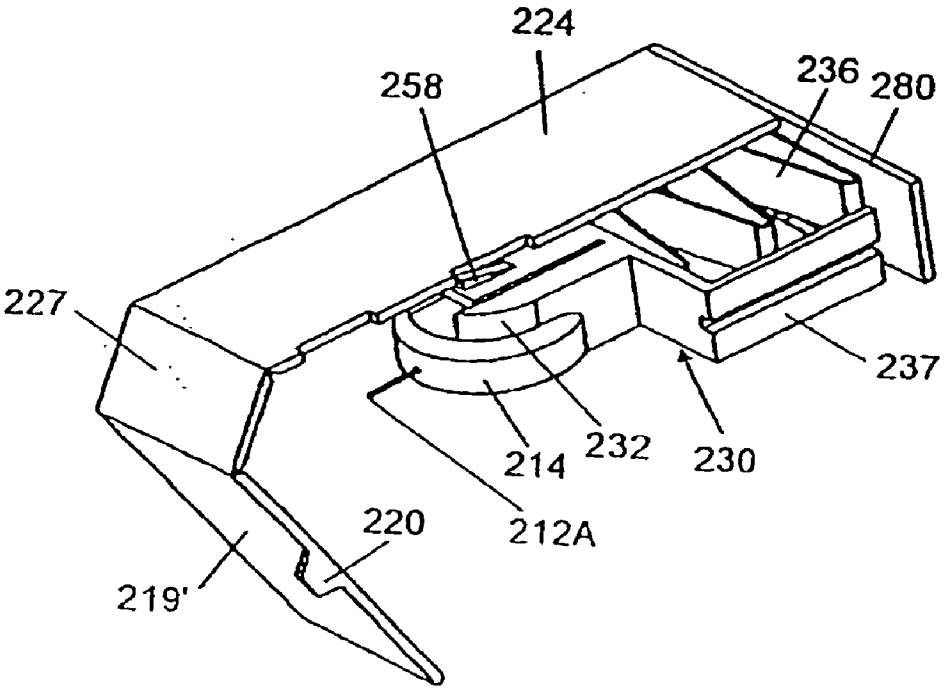

Fig. 14

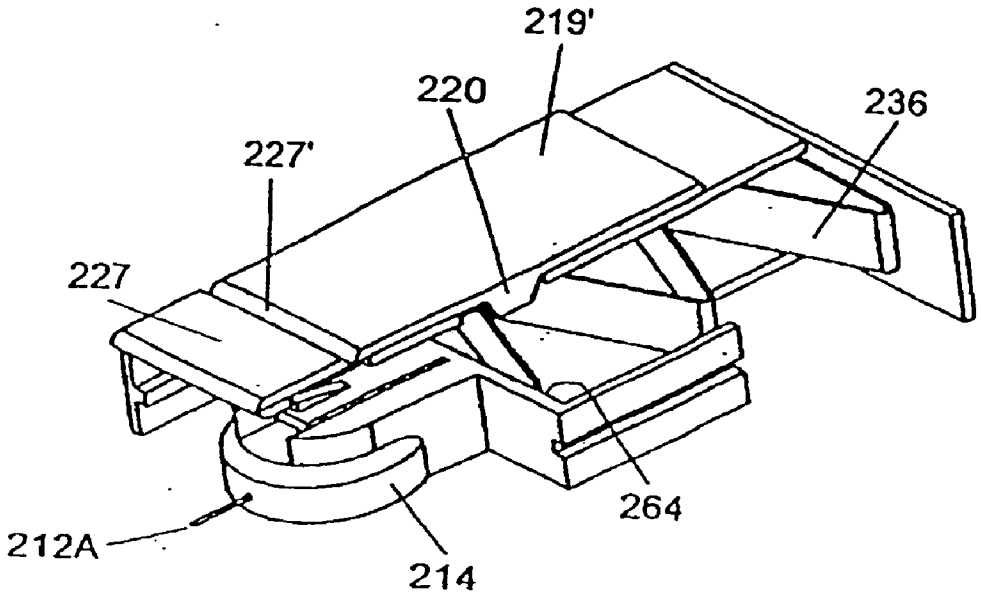

Fig. 15

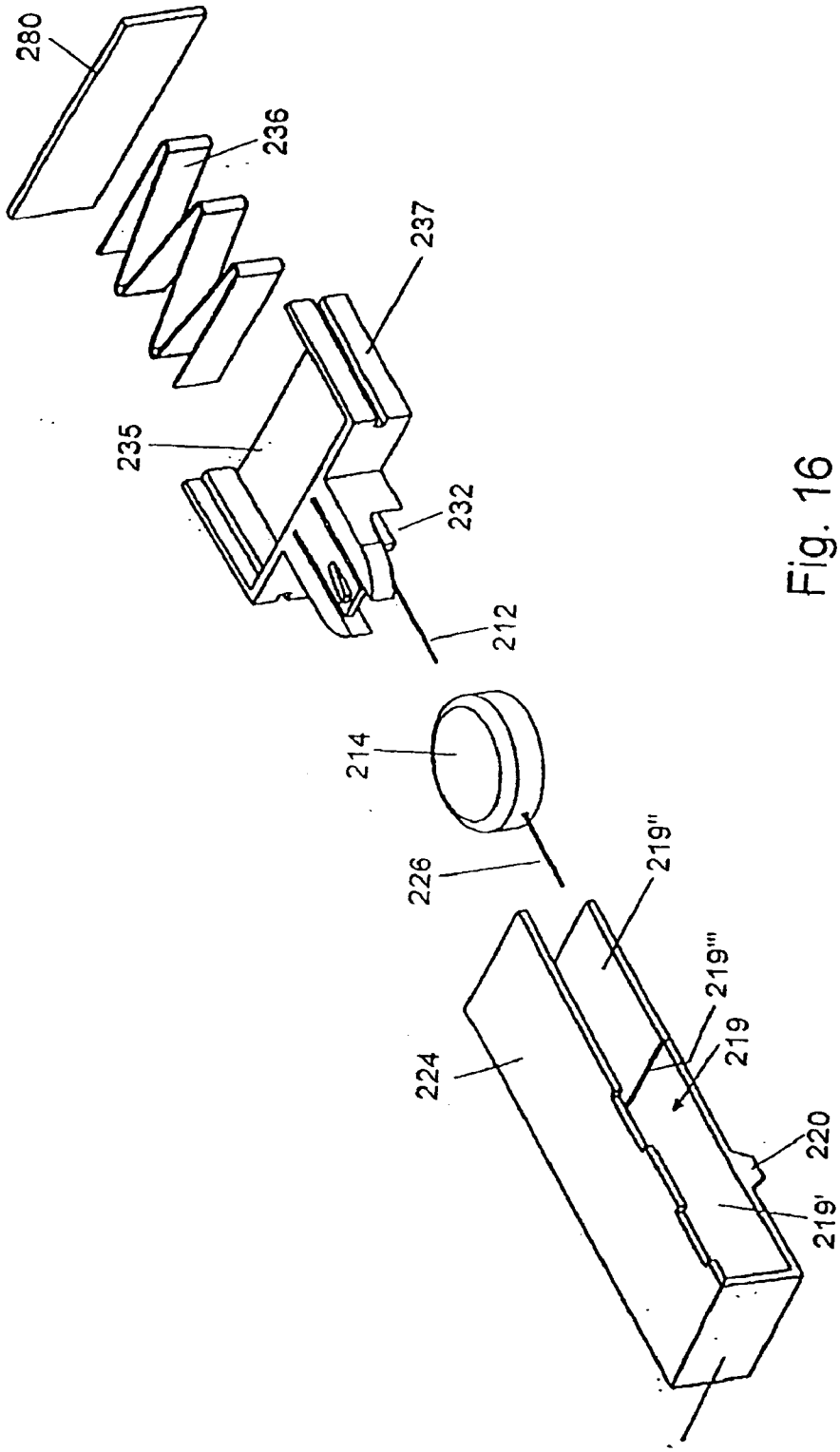

Fig. 16

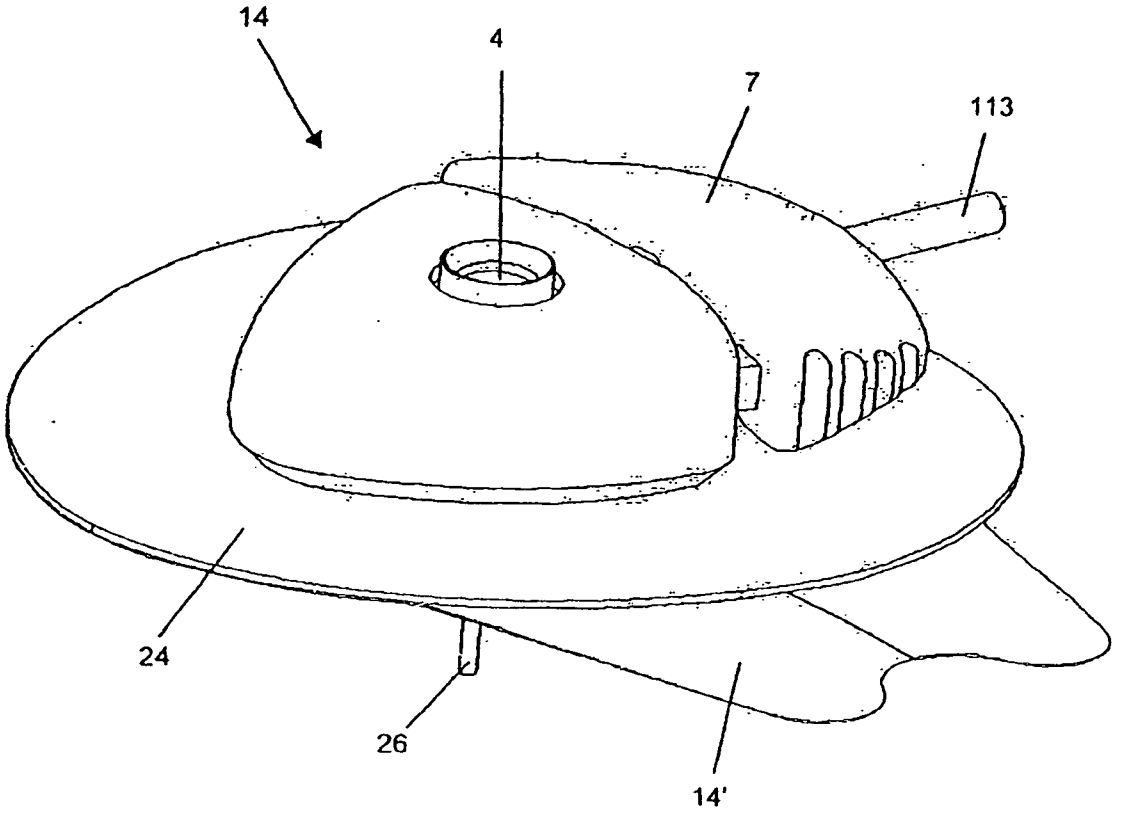

Fig. 17

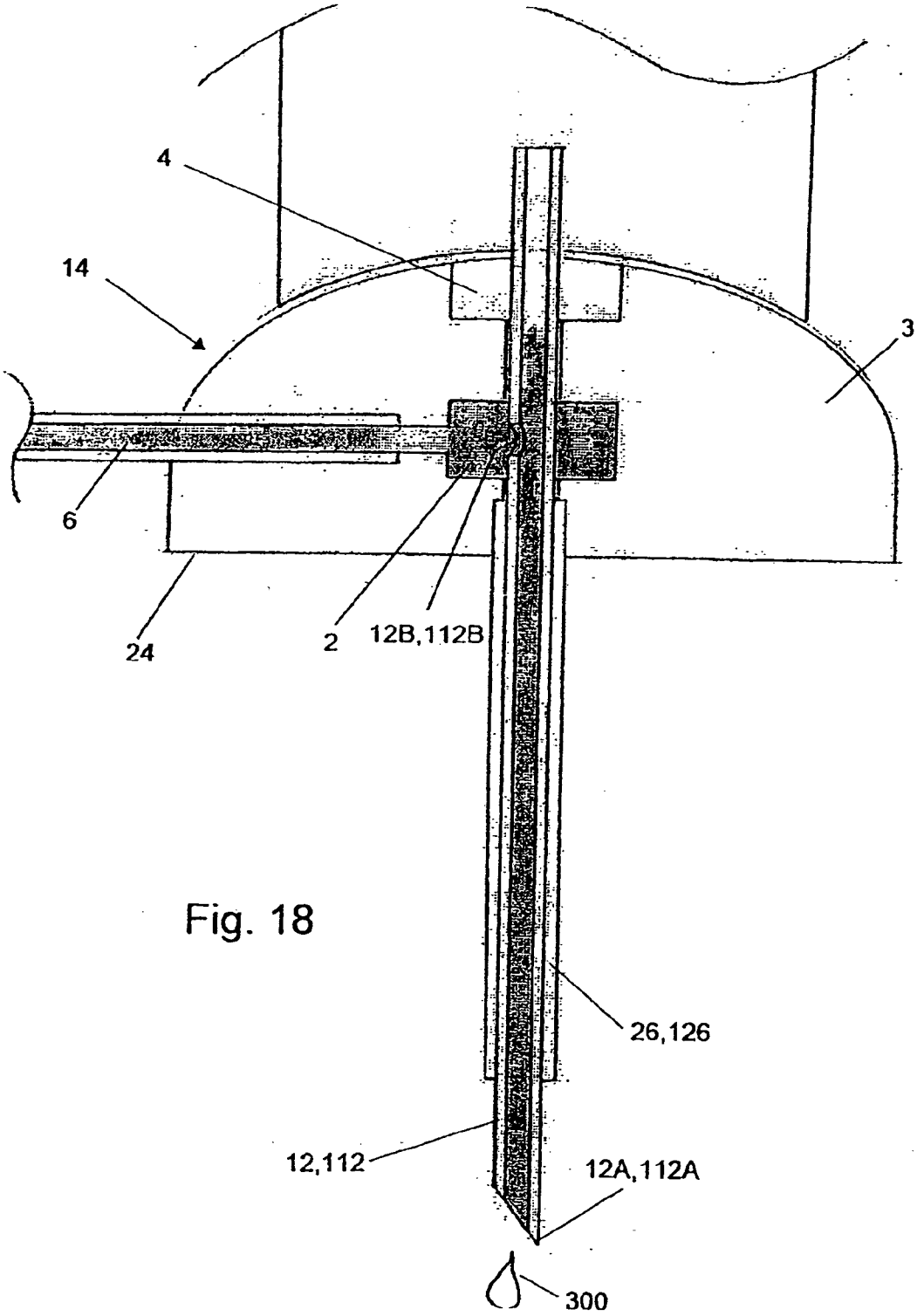

Fig. 18

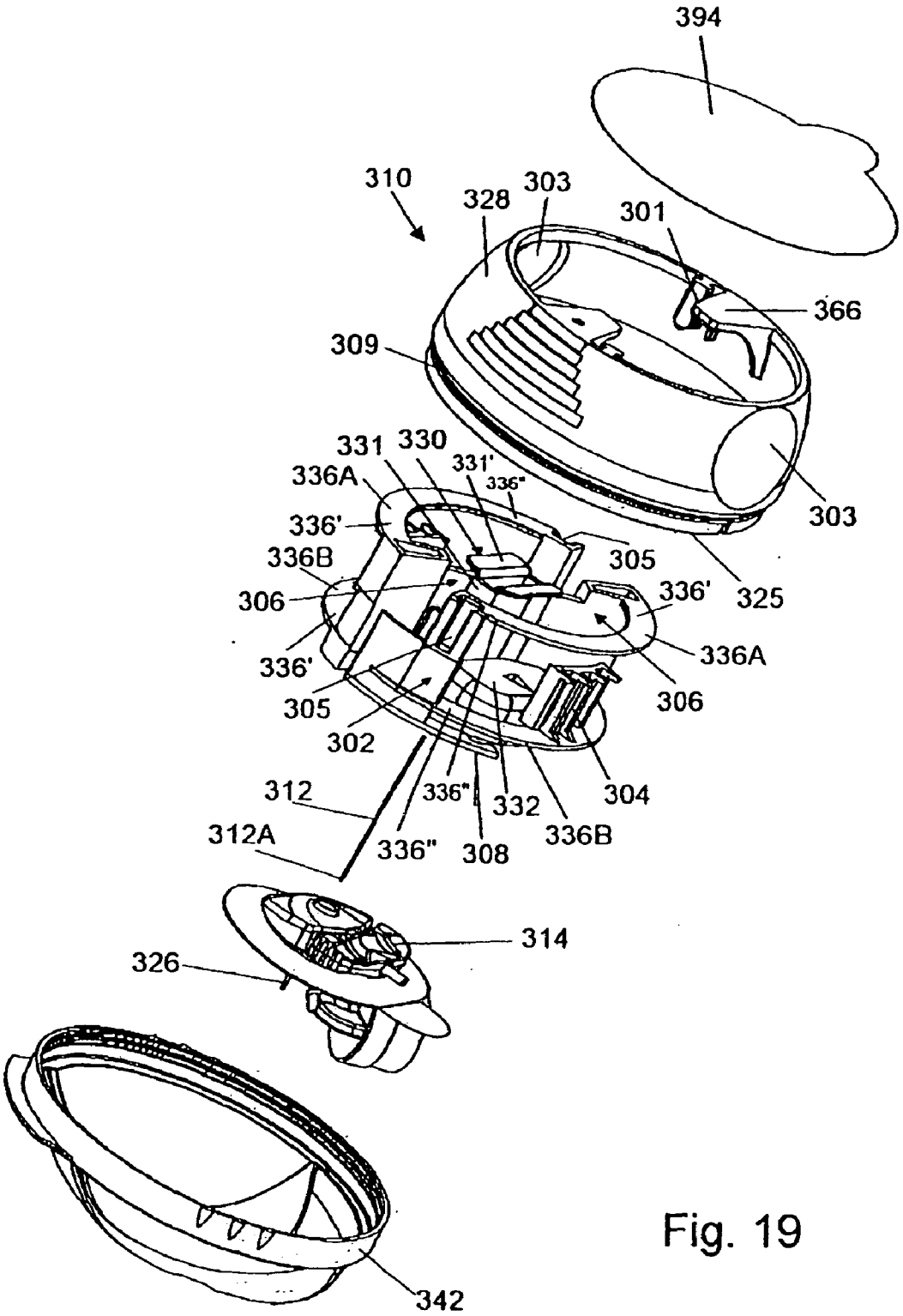
394
310
328
303
301
366
309
331
330
331'
336"
336A
336'
336B
305
306
336'
325
303
336'
336A
305
306
302
312
336"
332
304
312A
336"
308
336B
314
326
342

Fig. 19

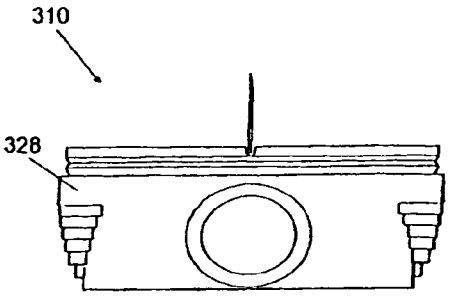

Fig. 20e

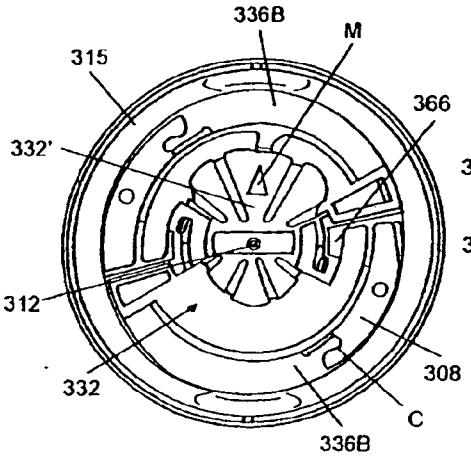

Fig. 20c

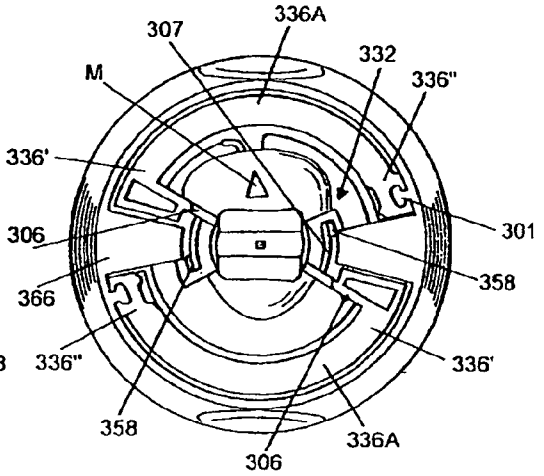

Fig. 20d

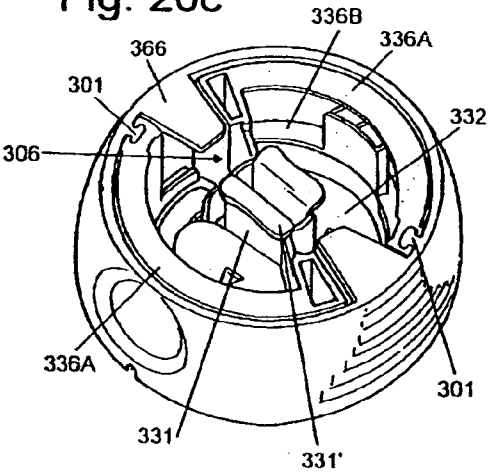

Fig. 20a

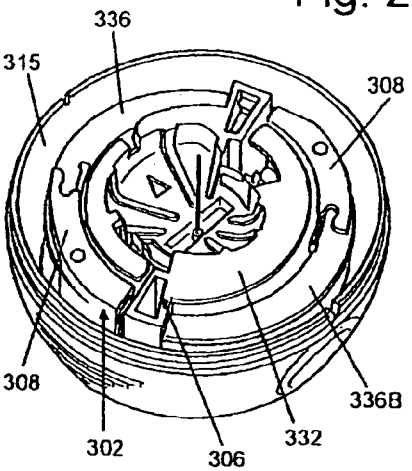

Fig. 20b

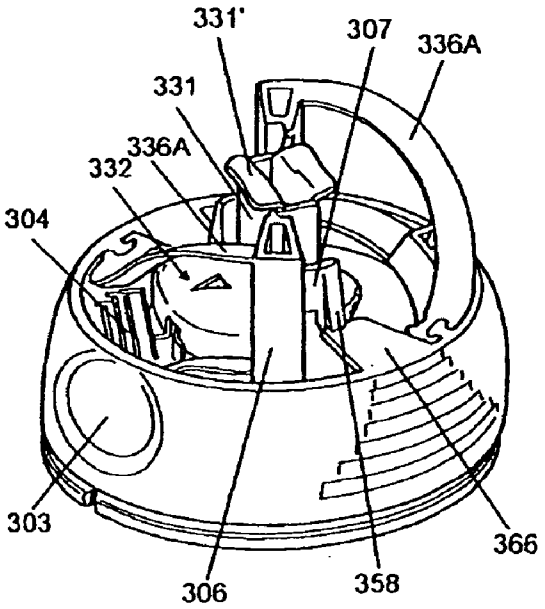

Fig. 21a

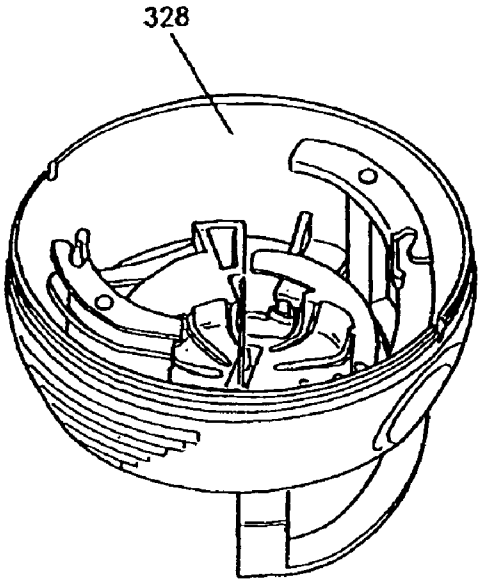

Fig. 21b

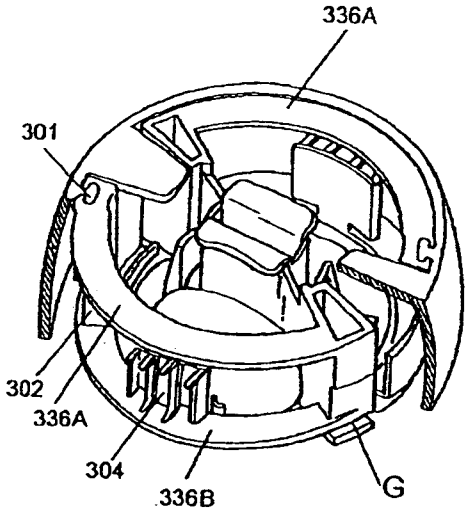

Fig. 21c

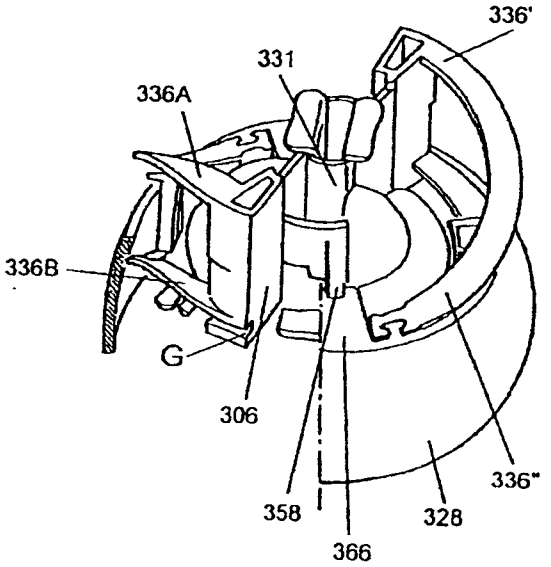

Fig. 21d

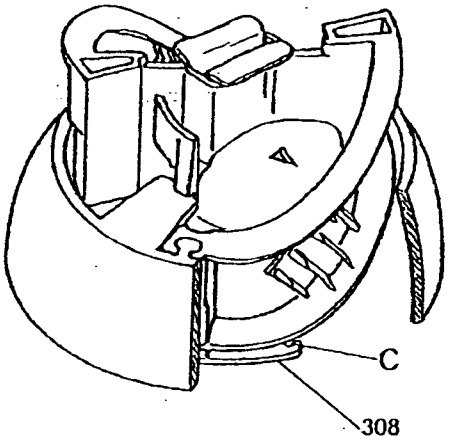

Fig. 21e

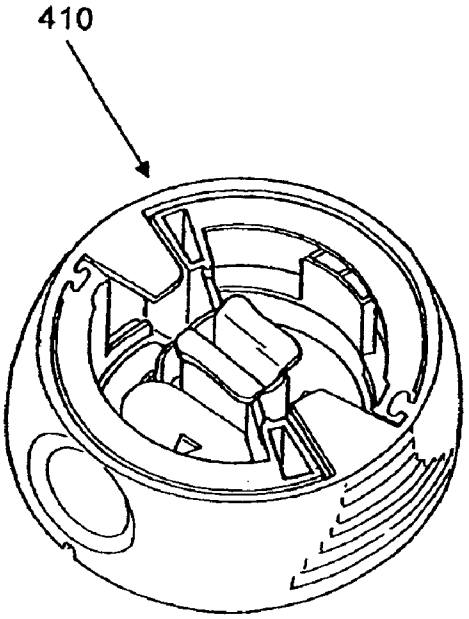

Fig. 22a

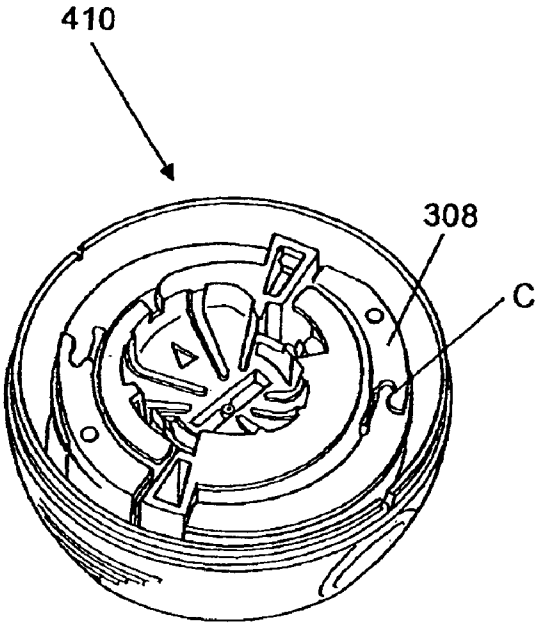

Fig. 22b

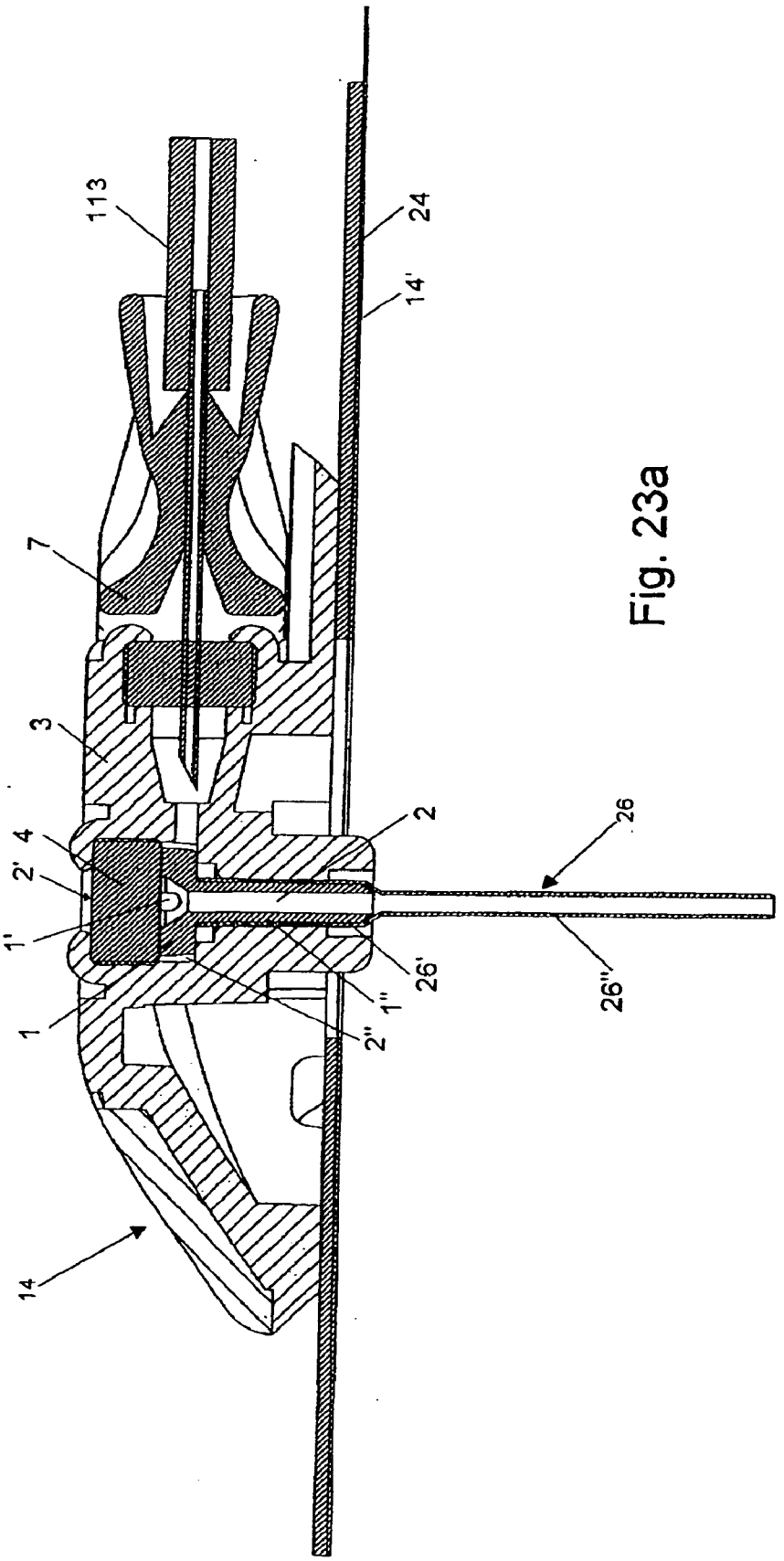

Fig. 23a

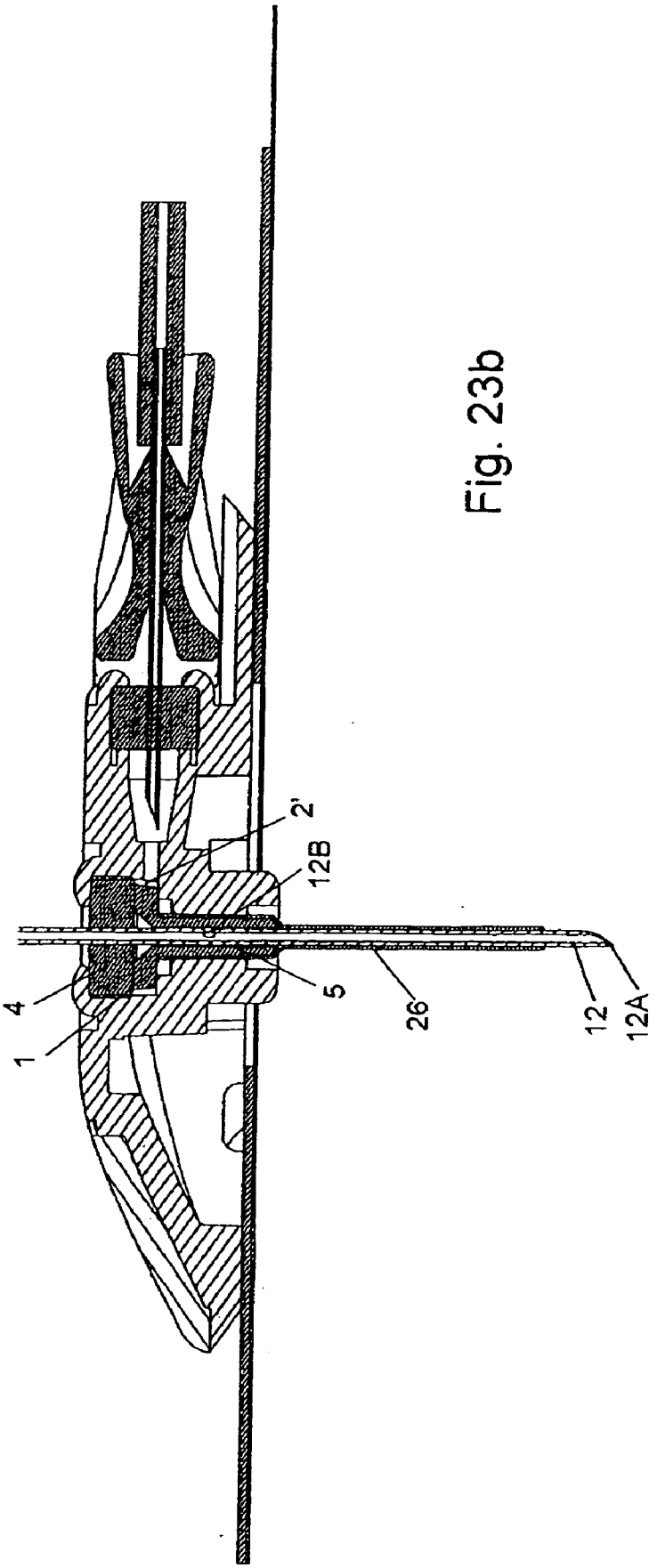

Fig. 23b

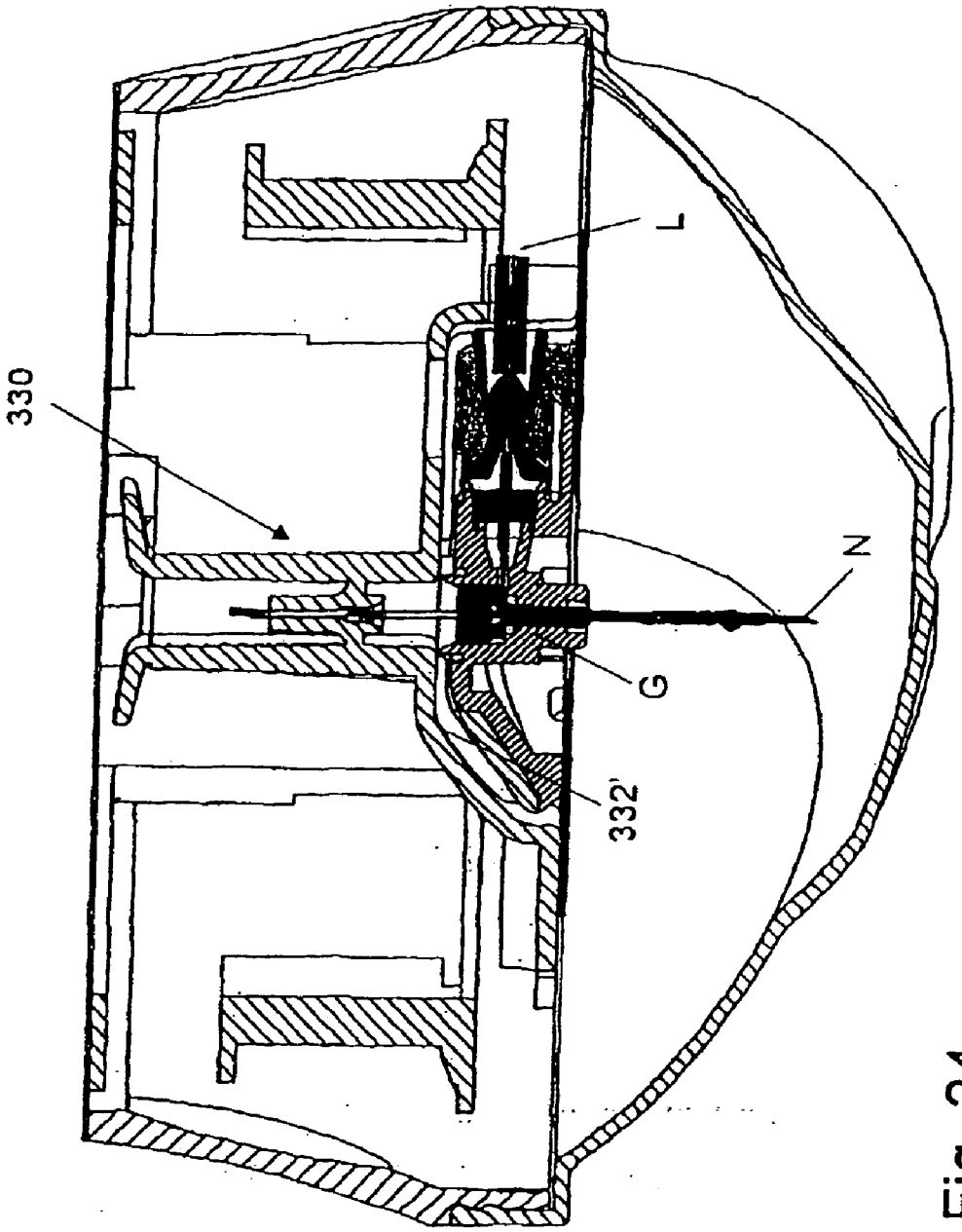

Fig. 24

INJECTOR DEVICE FOR PLACING A SUBCUTANEOUS INFUSION SET

BACKGROUND OF THE INVENTION

[0001] This invention relates generally to an improved injector device for the placement of a subcutaneous infusion set on a patient. Examples of injector devices for the placement of a subcutaneous infusion set are disclosed in U.S. Pat. No. 6,093,172, U.S. Pat. No. 5,851,197 and WO 99/33504, incorporated by reference herein.

[0002] Medical needles are widely used in the course of patient treatment, particularly for delivery of selected medications. In one form, hollow hypodermic needles are employed for transcutaneous delivery of the medication from a syringe or the like, see U.S. Pat. No. 5,665,071. In another, as shown in U.S. Pat. No. 5,591,188 incorporated herein by reference, an insertion needle used in conjunction with an injector device is employed for transcutaneous placement of a soft and relatively flexible tubular cannula, followed by removal of the insertion needle and subsequent infusion of medical fluid to the patient through the cannula. U.S. Pat. No. 5,681,323 relates to an insertion device for an emergency cricothyrotomy tube.

[0003] It is often necessary for a patient to transcutaneously place the medical needle himself. For example, diabetic patients frequently place a subcutaneous infusion set with a cannula for subsequent programmable delivery of insulin by means of a medication infusion pump. Such subcutaneous infusion sets are disclosed, for example, in U.S. Pat. No. 4,755,173, U.S. Pat. No. 5,176,662; U.S. Pat. No. 5,257,980 and WO 98/58693 which are incorporated by reference herein.

[0004] Some patients are reluctant or hesitant to pierce their own skin with a medical needle, and thus encounter difficulties in correct needle placement for proper administration of the medication. Such difficulties can be attributable to insufficient manual skill to achieve proper needle placement or alternately to anxiety associated with anticipated discomfort as the needle pierces the skin. This problem can be especially significant with medications delivered via a subcutaneous infusion set, since incorrect placement can cause kinking of the cannula and resultant obstruction of medication flow to the patient. Cannula kinking can be due to infusion set placement at an incorrect angle relative to the patient's skin, and/or needle placement with an incorrect force and speed of insertion.

[0005] The present invention is aimed at providing an improved injector device, which may allow for a shortening of the total time required for the placement of an infusion set. The present invention also aims at providing an improved spring-type drive for urging a plunger within a housing to an advanced position.

SUMMARY OF THE INVENTION

[0006] In accordance with the invention, an injector device has a plunger with a medical needle which may be hollow to allow for discharge of medication when priming the infusion set, and which is adapted for the quick and easy transcutaneous placement through the skin of a patient of the cannula of a subcutaneous infusion set, the insertion needle extending through the infusion set and protruding from the end of the cannula. The injector device is designed to place the cannula with the insertion needle extending therethrough, preferably with a controlled force and speed of insertion, to ensure proper needle placement with minimal patient discomfort. The injector device may also allow placement of the insertion needle through the skin at a selected insertion angle. After priming and placement of the infusion set the injector device is removed and delivery of medication is initiated.

[0007] Preferably, the injector device is provided to the patient as a sterile sealed, single use assembly including a subcutaneous infusion set with a housing already mounted on the insertion needle of the injector device, thereby reducing the number of components to be handled by the patient prior to the placement of the subcutaneous infusion set. The injector device assembly may be designed such that no further packaging is required leading to substantial cost reductions.

[0008] More particularly, the injector device comprises a device housing, preferably having an elongated bore, and a plunger slidably received therein for movement between an advanced position and a retracted position, the plunger having substantially non-detachably secured thereto an insertion needle adapted to receive and support said cannula in a position with the cannula oriented for transcutaneous placement upon movement of the plunger with said needle from the retracted position to the advanced position. A drive urges the plunger with a controlled force and speed from the retracted position toward the advanced position to transcutaneously place said cannula of said subcutaneous infusion set received on said insertion needle. The insertion needle on the plunger is removable from said cannula while maintaining the transcutaneous placement of the cannula. By is "substantially nondetachably" as used in the present application is meant a connection, which will remain stable under normal conditions of use to allow the needle to remain on the plunger when retracting the injector device from a patient's skin.

[0009] Preferably, the injector comprises a spring-loaded plunger having a head for receiving the infusion set in a position with the insertion needle projecting outwardly for transcutaneous placement through the skin of a patient. A front end of the housing is designed for being pressed against the skin of a patient, at a selected needle insertion site; and in an orientation with the needle disposed at a correct or desired insertion angle. A trigger member is operable to release the plunger and thereby permit the drive spring to carry the infusion set toward the patient's skin with a controlled force and speed, resulting in proper transcutaneous placement of the insertion needle with minimal patient discomfort.

[0010] The invention also relates to a novel spring-type drive for urging the plunger of an injector device to the advanced position, preferably for transcutaneously placing a subcutaneous infusion set, wherein the drive comprises a number of individual, elongated flexible plastics members, preferably extending around a respective part of the periphery of the plunger, in the annular space between the plunger and a device housing. Each member is connected with the plunger and with the device housing. In the advanced position of the plunger, the plastics members are essentially plane and non-deformed. However, when moving the

plunger to the retracted position, the plastics members are bend, setting up the required force that seeks to drive the plunger to an advanced position. The novel spring-type drive may also be implemented in injector devices of the type disclosed in U.S. Pat. No. 6,093,172, U.S. Pat. No. 5,851,197 and WO 99/33504 where the plunger head does not have an insertion needle mounted thereon for receiving an infusion set, but includes a recess adapted for receiving as well as supporting a subcutaneous infusion set.

BRIEF DESCRIPTION OF THE DRAWINGS

[0011] The accompanying drawings illustrate the invention.

[0012] **FIG. 1** is a perspective schematic vertical cross-sectional view illustrating an injector device embodying the novel features of the invention,

[0013] **FIG. 2** is a schematic cross-sectional view of the injector device shown in **FIG. 1**, with the end cap removed,

[0014] **FIG. 3** is a schematic cross-sectional view of the injector device of **FIG. 1**, with the plunger in the advanced position and after placement of the subcutaneous infusion set,

[0015] **FIG. 4** is a view similar to **FIG. 4** with end cap placed for protection of the protruding insertion needle,

[0016] **FIG. 5** is an exploded perspective view illustrating the plunger and housing parts of the injector device,

[0017] **FIG. 6** is a highly schematic vertical partly cross-sectional view illustrating an injector device according to a second embodiment of the invention, prior to use,

[0018] **FIG. 7** is a view similar to **FIG. 6**, illustrating the injector device being made ready for use,

[0019] **FIG. 8** is a view similar to **FIG. 6** of the infusion set being primed,

[0020] **FIG. 9** is a view similar to **FIG. 6** with the plunger being retracted and the injector device made ready for transcutaneous placement of the infusion set,

[0021] **FIG. 10** is a view similar to **FIG. 6**, with the infusion set being placed on a patient,

[0022] **FIG. 11** is a view similar to **FIG. 6**, with the injection device being removed from the infusion set placed on the patient,

[0023] **FIG. 12** is a horizontal perspective, cross-sectional view of the device shown in **FIGS. 6-11**, showing the spring-type drive with the plunger in the advanced position, as seen along line **12-12** in **FIG. 8**,

[0024] **FIG. 13** is a perspective view illustrating an injector device according to a third embodiment of the invention, prior to use,

[0025] **FIG. 14** is a perspective, partly cross-sectional view of the device of **FIG. 13**,

[0026] **FIG. 15** is a view similar to **FIG. 14**, showing the plunger in the advanced position,

[0027] **FIG. 16** is a exploded perspective view illustrating the various parts of the injector device of **FIGS. 13-15**,

[0028] **FIG. 17** is a perspective view of an infusion set suitable for use with the injector device of the invention,

[0029] **FIG. 18** is a cross-sectional view showing how priming of an infusion set may be carried out using a hollow insertion needle,

[0030] **FIG. 19** shows in an exploded view a presently preferred embodiment of the injector device assembly, similar to the embodiment of **FIGS. 6-12**, wherein the plunger has an insertion needle secured thereto.

[0031] **FIGS. 20***a* and **20***b* show in a perspective view the injector device of **FIG. 19** with the plunger in the advanced position

[0032] **FIGS. 21***a* and **21**b show in a perspective view the injector device of **FIG. 19** with the plunger in the retracted position,

[0033] **FIGS. 21***c-e* are views similar to **FIG. 20***a,* **21***a* and **21***b* with part of the housing being cut away,

[0034] **FIGS. 22***a* and **22***b* show an injector device without an insertion needle secured to the plunger,

[0035] **FIGS. 23***a* and **23***b* show a schematic cross-sectional view through the infusion set of **FIG. 17**, without and with an insertion needle, respectively, and

[0036] **FIG. 24** shows the injector device of **FIG. 19** with a glucose sensor.

DETAILED DESCRIPTION OF THE PREFERRED EMBODIMENTS

[0037] An injector device shown schematically in **FIG. 1** by the reference numeral **10** is provided for quick and easy placement of a subcutaneous infusion set **14**, and may then be discarded safely. The infusion set **14** with a cannula **26** extending therefrom is shown schematically only.

[0038] The injector device **10** includes a plunger **30** having thereon a medical insertion needle **12** with a pointed end **12**A. The plunger **30** is arranged for longitudinal sliding movement within a device housing **28** between a forward advanced position (**FIGS. 3 and 4**) and a rearward retracted position (**FIGS. 1 and 2**). The device housing **28** may have a circular, square or any desired cross-sectional shape. The device housing **28** and the plunger **30** are preferably formed of a plastics material in a moulding process.

[0039] The infusion set **14** is used to infuse medical fluids such as insulin to a patient, and generally includes a housing with an internal chamber (not shown) that receives medication via infusion tubing. An enlarged base **24** of the infusion set **14** is provided on the housing for stable affixation thereof to the skin of the patient. The enlarged base **24** may carry an adhesive and be provided with a release sheet **14**' which is removed to expose the adhesive prior to placement of the infusion set. Alternatively, the base **24** may be sized to allow the infusion set to be fixed to the patient by an adhesive patch. The infusion set has a protruding soft and flexible cannula **26**, which communicates with the internal chamber, and a passage sealed by a sealing membrane extends through the housing opposite the cannula **26**. The medical insertion needle **12** of the injector device **10** extends through the passage, into the internal chamber and through the cannula **26**, when the infusion set **14** is mounted in position on the injector device. After transcutaneous placement of the can-

nula **26**, the injector device **10** with the insertion needle **12** is retracted from the infusion set **14** to permit medication delivery through the cannula **26** to the patient.

[**0040**] Examples of subcutaneous infusion sets suitable for use with the injector device of the present invention, and in particular in conjunction with the insertion needle of the injector device, are shown and described in U.S. Pat. Nos. 4,755,173, 5,176,662 and 5,257,980, European patent no. 956 879 and in international patent application no. 98/58693, which are incorporated by reference herein. Such infusion sets generally include a hollow cannula part. The insertion needle shown in those publications may be obviated through the present invention. Alternatively, the injector device according to the invention may be used to transcutaneously place a cannula associated with other types of infusion sets.

[**0041**] The invention provides a ready to use injector device, which may be molded from a suitable plastics material. An -injector device assembly including the injector device and a subcutaneous infusion set will effectively simplify the placement of an infusion set as the assembly, as delivered from the factory, provides an infusion set already mounted on the insertion needle **12**. The time required for the placement of an infusion set is reduced.

[**0042**] The injector device **10** includes a trigger-type actuator mechanism for transcutaneous placement, with a controlled speed and force, of the insertion needle **12** which is secured to the plunger **30**, with the insertion needle **12** oriented at an angular position relative to the skin of the patient in principally the manner as shown in international patent application no. 99/33504 incorporated herein by reference.

[**0043**] The plunger **30** has a recessed head **32** (**FIG. 3**) at a lower or forward end thereof shaped for receiving the housing of the subcutaneous infusion set **14**. Centrally in the recess, the head **32** is provided with the metal insertion needle **12**, which is securely connected thereto. The insertion needle **12** may connected to the plunger in any suitable manner such as in the process of molding the plunger **30**, or the insertion needle **12** may be press-fit in the plunger **30**. The recess in the plunger head **32** need not provide support for the infusion set **14** in the sense of providing resistance to removal of the infusion set **14**. Such support may be provided solely by the frictional engagement of the insertion needle **12** with the cannula **26** or preferably with the sealing membrane within the internal chamber of the infusion set **14**. A rear end of the plunger **30** has a trigger-type actuator assembly **34** cooperating with the rear end of the device housing **28**, and includes a stem, which is longitudinal split to define a pair of trigger arms **38** which have out-turned trigger fingers **58** on the sides thereof. The trigger actuator assembly **34** is adapted to hold the plunger **30** in a retracted position, against the force of a compressed helical drive spring **36**. The trigger arms **38** of the actuator assembly **34** are adapted for fingertip depression to release the plunger **30** for spring-loaded travel toward the advanced position, and for corresponding transcutaneous placement of the insertion needle **12**, and of the cannula **26** travelling therewith, through the patient's skin. In an alternative embodiment, s release of the plunger **30** may be caused by pressing manually on diametrically opposed outside areas of the device housing **28** to deform the housing **28** and thereby effect release of the trigger arms **38**.

[**0044**] **FIGS. 1-5** illustrate construction details of the injector device housing **28**, lo wherein the lower or nose end thereof defines a flat and generally planar peripheral surface **25** for placement against the skin of a patient with a longitudinal axis of the device housing **28** oriented generally perpendicular to the patient's skin. A hollow bore of the device housing **28** has a size and shape for reception of the infusion set **14**, with the insertion needle **12** extending through the cannula **26** and extending together with the cannula **26** in a direction for placement on a patient. A releasable cover sheet **42** (**FIGS. 1 and 2**) is preferably secured to the device housing **28** at the nose end thereof to indicate the sterility of the infusion set **14**. The device housing **28** may also include a narrow slot (not shown) extending parallel with the insertion needle **12** to accommodate slide-fit reception of a coupling element projecting laterally from the infusion set housing for coupling of the infusion set with a pump (not shown), and longitudinally extending track slots **52** (**FIG. 3**). The plunger **30** includes ribs **50** for guided reception within the track slots **52** formed in the device housing **28** to control the movement of the plunger **30** between the advanced position and the retracted position. The plunger **30** ribs **50** define a surface **51** near the head **32** adapted to cooperate with a peripheral inner edge **29** at the nose end of the device housing **28** to limit movement of the plunger, thereby defining the advanced position of the plunger **30**.

[**0045**] Thus, the forward or nose end of the device housing **28** accommodates movement of the subcutaneous infusion set **14** between the retracted position disposed substantially at the rearward most end of the device housing **28**, and the advanced position.

[**0046**] As will be understood, the trigger-type actuator assembly **34** generally functions to releasably retain the plunger **30** in the retracted and cocked position, ready for rapid and spring-loaded actuation upon depression of the trigger arms **38** to place the infusion set **14** on the patient. More particularly, the trigger assembly **34** is initially locked against a shoulder **66** formed on the device housing **28** by means of the trigger fingers **58**. The drive spring **36** comprises a coil spring positioned about the stem on the plunger **30** and reacts between a rearward face **64** of the plunger head **32**, and an internal shoulder **66'** on the device housing **28**. The drive spring **36** normally biases the plunger **30** toward the advanced position. During manufacture of the injector device assembly, the infusion set **14** is seated in the recess formed in the plunger head **32**, either before or after the plunger **30** is moved to the retracted position. In this retracted plunger position, the drive spring **36** is retained in a compressed and cocked condition, with the cannula **26** of the infusion set **14** being received on the insertion needle **12**. The releasable cover sheet **42** is then applied to the device housing **28** at the nose end thereof.

[**0047**] In use of the injector device **10** with the infusion set **14**, the cover sheet **42** is first removed and the injector device **10** is placed firmly against the patient's skin, with the infusion set **14** supported in the proper orientation and at a predetermined distance from the skin. A cap **94**, which prevents accidental projection of the infusion set **14** by preventing access to the trigger arms **38**, is removed. Simple depression of the arms **38** releases the cocked plunger for spring-loaded travel rapidly albeit with a controlled speed and force of insertion, to ensure penetration of the patient's

skin with minimal discomfort, and in a manner which properly places the insertion needle and cannula **26**.

[**0048**] Following placement of the infusion set **14** the injector device with insertion needle **12** is withdrawn quickly and easily from the cannula. Thereafter, the injector device can be discarded and the infusion set **14** can be used in a normal manner to deliver a selected medication through the infusion tubing and cannula **26** to the patient. As shown in **FIG. 4**, the safety cap **94** may conveniently be adapted to cooperate with an annular recess **33** formed in the head **32** of the plunger **30** for providing protection against the needle **12**.

[**0049**] It is noted that the removable cap **94**, when sealed to the device housing **28** at the end opposite the plunger head, together with the cover sheet **42** enable the injector device **10** together with the infusion set **14** mounted on the insertion needle **12** to be sterilised in a conventional sterilisation process using e.g. ethylene oxide, where the sterilising agent flows through the membrane formed by the cover sheet **42**. By proper choice of the materials used for making the injector device, the injector device may then remain sterile under normal conditions of storage, making any external packaging unnecessary.

[**0050**] An alternative embodiment of the invention is shown schematically in **FIGS. 6-12**, wherein components corresponding in function to those described previously with respect to **FIGS. 1-5** are identified by common reference numerals increased by **100**. **FIGS. 6-12** serve the purpose of explaining the principles involved in that embodiment, and the figures show schematic, partial cross-sectional views of the injector device.

[**0051**] **FIGS. 6-12** show an injector device assembly including a modified injector device **110** constructed from a reduced number of parts and having an alternative drive mechanism for advancing:the plunger. The modified injector device **110** comprises a generally cylindrical hollow device housing **128**, a plunger **130** and a trigger-type actuator **134** formed integrally with the plunger **130**. A cover **194**, preferably a flexible membrane, covers the top of the injector device **110** and a further cover **142** covers the bottom end of the injector device **110**.

[**0052**] The plunger **130** has a generally cylindrical form with a head **132** and a central pin **129** including a metal insertion needle **112** secured thereto in a molding process, by press-fit, or by any other method providing a suitable resistance to loss of the insertion needle during use of the device. The pin **129** stops at a distance from a pair of outwardly turned legs **138'** at the head **132**, to accommodate for the infusion set **114** in the head **132** of the plunger **130**. The insertion needle **112** extends through the infusion set **114** in a similar manner as described with reference to **FIGS. 1-6**. An infusion set tubing **113** having a typical length of between about 50 cm and 120 cm and connected to the infusion set **114** is wound up in the lower part of an annular space **115** between the device housing **128** and the plunger **130** to form part of the assembly.

[**0053**] More specifically, the device housing **128** again has a forward or nose end defining a flat and generally planar surface **125** for firm placement against the skin of a patient. The plunger **130** additionally includes a pair of resilient trigger arms **138** which are connected with the pair of outwardly turned legs **138'** and which have out-turned trigger fingers **158** at the sides thereof. The trigger arms **138** are adapted and sized for partial radial compression toward each other as they ride within the device housing when the plunger **130** is displaced from the advanced position (**FIG. 6**) to the retracted position (**FIG. 9**). As the retracted position is reached, the trigger arms **138** are spring-loaded by the resiliency to move first inwardly and then outwardly whereby the trigger fingers engage the upper surface of a shoulder **166** of the device housing **128**. In this position the trigger fingers **158** retain the plunger **130** in the retracted position.

[**0054**] A drive spring **136** is mounted within the device housing **128** to drive the plunger towards the nose of the device housing in the retracted position of the plunger **130**, upon release of the trigger arms **138**. The drive spring **136** is formed integrally with the device housing **128** and the plunger **130** in a molding process and may conveniently be: formed of the same plastics material as the plunger **130** and the device housing **128**. The spring is shown in closer details in **FIG. 12**. The spring **136** essentially comprises a number of elongated plastics strips **136**, each extending around a respective part of the periphery of the plunger **130**, in the annular space **115** between the plunger **130** and the device housing **128**. The drawing show an embodiment incorporating two such strips that each extends around about one fourth of the periphery of the plunger **130**. Each strip **136** is integrally connected at one end **136"** with the plunger **130** and with the device housing **128** at the other end **136'**. In the advanced position of the plunger shown in **FIGS. 6-8** and **10-12**, the strips **136** are preferably essentially plane and non-deformed. However, when moving the plunger **130** to the retracted position shown in **FIG. 9**, the strips **136** of the spring are bend, setting up the required force that seeks to drive the plunger **130** towards the nose of the device housing **128**. It is noted that this process normally gives rise to a rotational movement of the plunger **130** about its central axis, which is coincident with the insertion needle **112**.

[**0055**] Operation of the injector device assembly shown in **FIGS. 6-12** is as follows. Since the injector device is preferably delivered to the patient in an uncocked state to simplify the process of manufacture, the plunger **130** must first be moved to the retracted position. To allow for retraction of the plunger **130**, the upper cover **194**, which spans across the device housing **128** and the lower cover **142** are first removed, as shown in **FIG. 7**. The lower cover **142** may be hingedly connected to the device housing **128**. In this process, the infusion set **114** is exposed with the pointed end **112A** of the insertion needle **112** projecting from the end of the soft flexible cannula **126**. The infusion set tubing **113** is then connected to a suitable pump, and the infusion set **114** is primed (drop marked **300** in **FIG. 8**) by allowing medication to exit through the narrow annular space between the cannula **126** and the insertion needle **112** or, if a hollow needle is used, through the needle, as shown in **FIG. 18**. The injector device **110** is then cocked by displacing the plunger **130** with respect to the device housing **128** as illustrated by the arrow in **FIG. 9**, until the fingers **158** engage the upper shoulder **166** of the device housing **120** indicating that the injector device is now ready for use. A release sheet **114'** is then removed exposing an adhesive material on the bottom side of the infusion housing **114**, and the patient or the nursing personnel then places the injector device on the patient's skin. The plunger **130** is released by application of

an inwardly directed manual force on the arms **138** to transcutaneously place the insertion needle **112** and the cannula **126**. In an alternative embodiment, release of the plunger **130** may be caused by pressing manually on diametrically opposed outside areas of the device housing **128** to deform the housing **128** and thereby effect release of the trigger arms **138**.

[**0056**] The injector device **110** is then removed, leaving the infusion set **114** on the patient's skin, illustrated by reference numeral **116**, and the bottom cover **142** is then repositioned at the original place shown in **FIG. 11** for protection of the insertion needle **112** which projects partially from the nose end of the device housing **128**.

[**0057**] The removable upper cover **194** and the bottom cover **142**, when sealed to the device housing **128**, allow the injector device **110** together with the infusion set **14** mounted on the insertion needle **112** to be sterilised in a conventional sterilisation process using e.g. ethylene oxide. For this purpose one or both covers **142**, **194** may comprise a permeable membrane allowing through-flow of the sterilising agent. By choosing suitable materials, the injector device may then remain sterile for a long time under normal conditions of storage whereby no further packaging is required to ensure sterility of the assembly at the time of use. For this purpose, at least one of the covers, a preferably the upper cover **194**, may carry printed indicia relating to the shelf life of the assembly. One suitable material for the permeable membrane is Tyvec™.

[**0058**] **FIGS. 13-16** show a third embodiment of the invention wherein components corresponding in function to those described previously with respect to **FIGS. 1-5** are identified by common reference numerals increased by 200. **FIGS. 13-16** serve the purpose of explaining the principles involved in that embodiment, and the figures show schematic, partial cross-sectional views of an injector device **210**. The injector device **210** is particularly suitable for the placement of a subcutaneous infusion set **214** at an acute angle relative to the skin of a patient.

[**0059**] As best seen in **FIG. 13**, which shows the injector device in a semi-open state, the injector device **210** has a device housing **228** with a flattened box-like structure with parallel major walls **224**, **219**, the wall **219** including a frangible area **219'''**, see **FIG. 16** allowing the wall **219** to be split by manually pulling flap **229** (**FIG. 13**), thereby forming two separate wall parts **219'**, **219"** for a purpose that will be explained later. The housing **228** also includes a front wall **227** at the nose end of the injector device, and a rear wall **280**, and opposed parallel side walls **225** frangibly connected to wall part **219'**. The injector device **210** is presented to the consumer as a closed, box-shaped item, which may easily be provided with printed text as required.

[**0060**] **FIG. 14** shows the injector device in the same state shown in **FIG. 13**; however, a part of the walls **224**, **227** and **219**, as well as wall **225** have been omitted to show the interior of the injector device **210**.

[**0061**] The injector device **210** comprises a plunger **230** mounted for longitudinal sliding movement within the box-shaped housing between a rearward retracted position (**FIG. 14**) and a forward advanced position (**FIG. 15**). The device housing **228** and the plunger **230** are preferably formed of a plastics material. The device housing **228** may alternatively be manufactured from a blank of rigid cardboard. The plunger **230** has a recessed head **232** (best seen in **FIG. 16**) at a forward end thereof shaped for receiving the housing of a subcutaneous infusion set **214**. Centrally in the recess, the head **232** is provided with a projecting metal insertion needle **212** securely connected thereto. The plunger **230** need not provide support for the infusion set as understood in the sense of providing resistance to removal of the infusion set. Such support may preferably be provided by the frictional engagement of the insertion needle **212** with the infusion set **214**. A drive spring **236** positioned behind wall **280** reacts between a rearward faces **264** of the plunger head **232**. The drive spring **236** normally biases the plunger **230** toward the advanced position. The front end of the plunger **230** has a trigger button **258** cooperating with the wall **224** of the device housing **28**. In the retracted state of the plunger shown in **FIG. 14**, the trigger button **258** extends through an opening **222** formed in the upper wall **224** of the device housing **228** and aligned for reception of a release tab **220** on the wall **219'**, as will be explained.

[**0062**] The trigger button **258** may be adapted for fingertip depression to release the plunger **230** for spring-loaded travel toward the advanced position, and for corresponding transcutaneous placement of the insertion needle **212**, and of the cannula **226** travelling therewith, through the patient's skin. Preferably, he button **258** is depressed by pivoting wall part **219'** about line **227'**. When the tab **220** formed on the external surface of wall part **219'** is aligned with the slot **220**, the trigger button **258** can be depressed to actuate the spring-locked plunger, by manually pressing down wall part **219'**.

[**0063**] Before opening the device housing **210**, that is, before separating wall **219**, **219'** along frangible line **219'''**, the assembly is maintained under sterile conditions. A removable cover sheet **294** (**FIG. 13**) is sealed to wall **224** to cover opening **222**. All other walls defining the closed housing **210** being sealed together, the cover sheet **294**, when being permeable allows the injector device **210** together with the infusion set **214** mounted on the insertion needle **212** to be sterilised in a conventional sterilisation process using e.g. ethylene oxide, where the -sterilising agent flows through the permeable membrane.

[**0064**] **FIG. 17** shows an example of an infusion set **14** suitable for use with the injector device according to the invention. The infusion set **14** includes a housing **3** with an internal chamber (not shown). The internal chamber receives medication via infusion tubing **113** which may be detachably connected to the housing **3** by any suitable connector **7**. The base **24** of the housing **3** may be a flexible sheet of a woven material secured to the housing **3** such as by means of an adhesive and carrying an adhesive covered by a release sheet **14'** which is removed to expose the adhesive prior to placement of the infusion set. The infusion set **14** has a protruding soft and flexible cannula **26**, which communicates with the internal chamber. An internal passage which is sealed by a sealing membrane **4** and which is penetrated by the insertion needle of the injector device extends through the housing opposite the cannula **26**.

[**0065**] **FIG. 18** shows how priming of the infusion set may be carried out prior to the placement of the infusion set using an injector device with a plunger shown only in part and carrying a hollow insertion needle **12**, **112** having a

lateral opening **12**B, **112**B. The medical insertion needle **12**, **112** of the injector device extends into the internal chamber **2** of the infusion set **14** and through the cannula **26**, **126**, when the infusion set **14** is mounted in position on the injector device. Medication **6** is then supplied through tubing **113**, into the internal chamber **2**. To allow the user to visibly confirm that the internal chamber **2** has been completely filled with medication, the lateral opening **12**B, **112**B allows the medication to flow into the interior of the needle **12**, **112** and to exit through pointed end **12**A, **112**A.

[**0066**] **FIG. 19** shows in an exploded view a presently preferred embodiment of the injector device assembly In respect to **FIGS. 6-12**, elements having a similar function are identified by the same numerals increased by 200.

[**0067**] The injector device **310** includes respective removable covers **342**, **394**, the cover **342** having a hollow for accommodating a part of the insertion needle **312** when the cover **342** is secured to the housing **328**, such as by snap engagement with the rim **309** of the housing **328**. The cover **342**, the housing **328**, the plunger **330** and a drive with a spring for advancing the plunger **330** to the advanced position are preferably made of plastics while the cover **394** may be a flexible foil secured to the housing **328** by an adhesive. Preferably, the covers **342**, **394** serve as bacterial barriers, the flexible foil **394** being of medical paper. An insertion needle **312** is preferably secured in a stable manner to the plunger **330** of the injection device, such as by press-fitting, the plunger **330** having a narrow central passage wherein an end of the insertion needle **112** is lodged. As will appear, the plunger **330** and the drive may conveniently be formed integrally as a single component in a moulding process.

[**0068**] The ring-shaped housing **328** is flexible in the sense that the application of a manual force against diametrically opposed depressions **303** of fingertip size will give rise to a slight deformation of the housing **328** such that it assumes a slightly oval shape when viewed from above for bringing about a release of the plunger in the retracted position and cause a spring-loaded movement of the plunger **330** towards the advanced position, as will be explained. For maintaining the plunger.**330** in the retracted position the housing **328** is provided with two opposed ledges **366**. Moreover, the housing **328** is provided with opposed dovetail projections **301** extending along the same general direction as the insertion needle **312** and adapted to connect with complementary recesses in the aforementioned spring, to secure the spring in relation to the housing **328**.

[**0069**] The plunger **330** generally includes a head **332**, a hub **331** and, opposite the head **332**, an enlarged gripping portion **331**' which allows a user to manually pull the plunger **330** to a retracted position. The head **332** preferably carries a marking M representing the place where the **113** tubing exits the infusion set **314** located there under whereby the user can check the orientation of the tubing after placement of the infusion set. The head **332** moreover has a recess **332**' for accommodating the infusion set **326** with cannula **326** through which the insertion needle **312** extends, the infusion set **314** preferably being maintained in position by frictional engagement of the insertion needle **312** with an inside surface of the infusion set **314**. The plunger **330** has two opposed rigid walls **306** extending radially outwardly from the hub **331**. The walls **306** extend in the axial direction of the device **310**, i.e. in the same general direction as the insertion needle **312**, and are connected to the aforementioned spring. Moreover, as best seen in **FIG. 20***d,* the walls **306** each carry a lateral projection **307** with a finger **358** which is releasably locked in engagement with a corresponding one of the ledges **366** of the housing **328** by snap action in the retracted position of the plunger **330**. The depressions **303** preferably being offset with respect to the ledges **366** by about 90° will cause the opposed ledges **366** to move apart when the aforementioned manual force is applied and the housing **328** assumes an oval shape, thereby bringing the finger **358** on each wall **306** out of engagement with, the corresponding ledge **366**. For retaining a proximal part nearmost the infusion set of a tubing **113** (not shown) wound around the plunger **330** in the same general manner shown in **FIG. 6**, wall **306** has a groove G best seen in **FIGS. 21***c* and *d* sized to receive a small length of the tubing and to prevent the infusion set **314** from being inadvertently pulled away from the plunger **330** by the user when the tubing is unwound for connection with a medical fluid supply.

[**0070**] The drive which acts to drive the plunger **330** from the retracted position towards the advanced position when the fingers **358** are disengaged comprises a spring including four thin and flexible plastics strips, of which two opposed strips **336**A extend about halfway around the plunger **330** at the level of the gripping portion **331**' while two other opposed strips **336**B extend about halfway around the plunger **330** at the level of the head **332**, as viewed in the advanced and unbiased position of the plunger shown in **FIGS. 19 and 20***a-e.* One end **336**' of one of the strips **336**A and one end **336**' of one of the strips **336**B is rigidly connected to one of the walls **306**, while one end **336**' of the other one of the strips **336**A and one end **336**' of the other one of the strips **336**B is rigidly connected to the other one of the walls **306**. Preferably, the strips **336**A and **336**B are integrally connected with the walls **306** in a moulding process where the plunger **330** and the spring formed from the strips **336**A and **336**B is formed in one moulding operation.

[**0071**] The spring also comprises two rigid opposed rigid walls **302** that extend in the axial direction of the device **310** and that are each rigidly connected with the second end **336**" of one of the strips **336**A: and the second end **336**" of one of the other strips **336**B. The rigid walls **302** are preferably integrally connected with the strips **336**A and **336**B at the second end thereof. The walls rigid **302** each have an axially extending recess **305** which is complementary with the dovetail projection **301** on the housing **328**. When the plunger **330** with the spring is mounted within the housing **328** the dovetail projection **301** is slid into the recess **305** by axial movement; by selecting proper dimensions of the dovetail projection **301**, and possibly also by performing this operation at a predetermined temperature, a press-fit may result that prevents subsequent removal of the plunger **330** Alternatively, or additionally, the plunger **330** may be secured using glue, or using a welding process. The two rigid walls **302** of the spring also comprise a respective projection **308** with a lower surface which in the advanced position of the plunger **330** is essentially coplanar with the rim **309** of the housing **328**. The projections **308** include a clip-like retainer C for securing a distal part of the tubing wound around the plunger **330**, thereby maintaining the tubing in position until unwound by the user.

[0072] As will be understood, the walls **302** are fixed in relation to the housing **328**, and the strips **336**A and **336**B, being thin and flexible, define the parts of the spring that undergo a change in shape upon retraction of the plunger **330** and that through this change of shape generate the force acting on the plunger **330** via the connections at the ends **336**' and required to advance the plunger **330** to the advanced position upon disengagement of the fingers **358**. The shape of the strips **336**A and **336**B in the deformed condition when the plunger **330** is held in the retracted position is shown in **FIGS. 21***a-d.* The connection between the strips **336**A, **336**B and the walls **302**, **306** being rigid, in the sense that bending moments arising in the strips **336**A, **336**B upon retraction of the plunger **330** are transferred to the walls **302**, **306**, brings about a deformation of the strips **336**A, **336**B as shown.

[0073] It will be understood that the resiliency of the spring is generally defined by the elastic properties of the flexible strips **336**A, **336**B which should be selected such that the drive is capable of advancing the plunger **330** to the advanced position at least once, following retraction. The spring would normally allow the piston to be retracted several times, and provide the required force for subsequently advancing the plunger **330**. However, the device being normally a disposable unit requires the spring to be formed with the capability to only a limited number of times advance the plunger **330** at one given speed, and the spring need not be capable of returning the plunger to the exact original position after several times of use.

[0074] As seen best in **FIG. 19**, the two strips **336**B each carry a wall member **304** which provides support for a tubing (not shown) connected to the infusion set **314** and wound around the plunger **330** in the annular space **315** between the plunger **330** and the housing **328**.

[0075] **FIGS. 22***a* and **22***b* show an injector device without an insertion needle secured to the plunger.

[0076] **FIGS. 23***a* and **23***b* show a schematic cross-sectional view through the infusion set **14** of **FIG. 17**. This preferred infusion set is equally suited for use with or without the injector device described herein. As shown in **FIG. 23***a,* the plastics infusion set housing **3** has an internal chamber including a narrow cylindrical portion **2** and an enlarged cylindrical portion **2**', in an upper part of which is fixed a sealing membrane **4** which may be penetrated by a retractable insertion needle **12** with a pointed end **12**A, shown in **FIG. 23***b,* for placing the infusion set **14** on a patient by means of a flexible cannula **26**. The cannula **26** has a small diameter tubular portion **26**" and a larger diameter tubular portion **26**' which is press-fit or otherwise secured inside the narrow cylindrical portion **2** of the housing **3** chamber. A plug-like hollow tubular member **1** has a head portion nested in the enlarged cylindrical portion **2**', and a portion **1**" of smaller external diameter which extends into the larger diameter tubular portion **26**' of the cannula, preferably applying a radial pressure against the inside surface of the cannula **26** to thereby secure the cannula in place within the narrow cylindrical portion **2** of the housing **3** chamber. For this purpose, the plug-like hollow tubular member **1** preferably exhibits some resiliency.

[0077] The head portion of member **1** has an upper surface bearing tightly against the sealing membrane **4**, and has a diameter selected such that an annular passage **2**" is defined between the head portion and the housing **3** wall defining the enlarged cylindrical portion **2**' of the internal chamber. This annular passage is in communication with infusion tubing **113** supplying fluid to the infusion set **14**. The head portion of member **1** moreover has a number of radially directed entry ports **1**' of which one is shown in **FIG. 23***a,* thereby allowing fluid to flow from the passage **2**" into the interior of member **1** and further on into the small diameter tubular portion **26**" of the cannula **26**', and into the patient when the infusion set has been secured in place by an adhesive on base **24**. The base **24** of the housing **3** may be a flexible sheet of a woven material secured to the housing **3** such as by means of an adhesive and carrying an adhesive covered by a release sheet **14**' which is removed to expose the adhesive prior to placement of the infusion set.

[0078] **FIG. 23***b* shows how the infusion set may be primed prior to placement, when a hollow insertion needle **12**, which may be secured to a plunger of the injector device described herein, extends through the cannula **26**. The hollow insertion needle **12** has a lateral opening **12**B that defines an entry port whereby fluid entering the interior of member **1** through the entry ports **1**' may flow into the interior of the hollow insertion needle **12** and out of the insertion needle **12** at pointed end **12**A. For establishing communication, the inside diameter of the portion **1**" of member **1** may as shown be slightly greater than the outside diameter of the insertion needle **12** such that an annular passage is formed allowing fluid to flow from tubing **113** into the insertion needle **12**.

[0079] A variety of further modifications and improvements to the automatic injector device unit of the present invention will be apparent to persons skilled in the art. Accordingly, no limitation on the invention is intended by way of the foregoing description and accompanying drawings, except as set forth in the appended claims. It is noted that the assembly may, depending on the design, be put on the market as such, i.e. with no further packaging being required. Moreover, the injector device, provided with an insertion needle or not, is not exclusively suited for placing an infusion set but may also be used for placing a transcutaneous glucose sensor. **FIG. 24** shows the injector device of **FIG. 19** with the opposed sealed covers and with a glucose sensor housing G including a sensor needle N inserted into the patient by an insertion needle which is arranged in the plunger head recess **332**' in lieu of an infusion set. The glucose sensor G may have a connecting cable L wound around the plunger **330** in the same manner as the infusion set tubing described above, or may have ports for connecting the glucose sensor to an external device for recording the glucose level of the patient.

1. An injector device for transcutaneously placing a hollow cannula of a subcutaneous infusion set through the skin of a patient, comprising:

a device housing,

a plunger slidably received within the device housing for movement between an advanced position and a retracted position, the plunger having an insertion needle secured thereto by a stable connection preventing loss of the insertion needle during use of the device, said insertion needle receiving and supporting the cannula of said subcutaneous infusion set in a position with

the cannula oriented for transcutaneous placement upon movement of said plunger with said needle from the retracted position to the advanced position,

a drive for urging the plunger from the retracted position toward the advanced position to transcutaneously place said cannula of said subcutaneous infusion set received on said insertion needle, and

wherein the insertion needle secured to said plunger is removable from said cannula while maintaining the transcutaneous placement of the cannula.

2. The injector device of claim 1, wherein the device housing has a forward end defining a generally planar surface for placement against the skin of a patient with the device housing in a predetermined orientation relative to the patient's skin.

3. The injector device of claim 1, wherein a forward end of said insertion needle opposite said plunger is substantially retracted within the device housing when the plunger is in the retracted position.

4. The injector device of claim 1, wherein the infusion set comprises a tubing, said device housing including a space, preferably an annular space, for accommodating said tubing.

5. The injector device of any of claim 1, wherein the insertion needle is secured to said plunger by press-fit.

6. The injector device of claim 1, wherein the insertion needle is hollow and has an entry port and an exit port.

7. The injector device of claim 1, said cannula being soft and flexible.

8. The injector device of claim 1, wherein said drive comprises a number of individual, flexible plastics strips extending around a respective part of the periphery of the plunger, in a space between said plunger and said device housing, each strip being connected at one end with the plunger and with the device housing at the other end.

9. The injector device of claim 8, wherein said strips are integrally connected with said device housing.

10. The injector device of claim 8, each strip being essentially plane and non-deformed in the advanced position of the plunger.

11. The injector device of claim 10, two strips extending in a common plane around a respective part of said periphery of said plunger, and two further strips extending in a second plane around a respective part of said periphery, in said advanced position of said plunger.

12. The injector device of claim 8 or **10**, wherein said strips and said plunger are molded as a unitary component, said unitary component being connected to said housing.

13. The injector device of claim 1, including a lock for releasably locking said plunger in said retracted position, said housing being manually deformable to effect release of said plunger.

14. The injector device of claim 1, further including a removable cover at a forward end of the device housing for covering an infusion set received and supported by said insertion needle, said cover including a hollow for receiving a part of said insertion needle when said plunger is in said advanced position.

15. The injector device according to the preceding claim, said cover being repositionable for covering said insertion needle subsequent to removal of said infusion set.

16. An injector device assembly, comprising:

an infusion set including a housing and a hollow cannula,

a device housing,

a plunger slidably received within the device housing for movement between an advanced position and a retracted position, the plunger having an insertion needle secured thereto by a stable connection preventing loss of the insertion needle during use of the device, said insertion needle extending through said cannula with the cannula oriented for transcutaneous placement upon movement of the plunger from the retracted position to the advanced position,

a spring for urging said plunger toward the advanced position, and

a trigger for releasably retaining the plunger in the retracted position, the trigger being operable to release the plunger for spring-loaded movement with a controlled force and speed toward the advanced position,

wherein the insertion needle secured to said plunger is removable from said cannula while maintaining the transcutaneous placement of the cannula.

17. The injector device assembly of claim 16, wherein said device housing includes a space, preferably an annular space, for accommodating a tubing that forms part of said infusion set for delivery of medication to said hollow cannula.

18. The injector device assembly of claim 16, wherein the device housing has a forward end defining a generally planar surface of placement against the skin of a patient with the device housing in a predetermined orientation relative to the patient's skin.

19. The injector device assembly of claim 16, said insertion needle being in frictional engagement with said infusion set.

20. The injector device assembly of claim 16, wherein a releasable cover member covers at least one end of the device housing for assuring sterile conditions of the infusion set prior to use of the injector device assembly, indicia relating to the shelf life of said assembly preferably on said cover.

21. The injector device assembly of claim 20, said plunger being in said advanced position prior to first time removal of said at least one cover member.

22. The injector device assembly of claim 16, wherein said spring comprises a number of individual, flexible plastics strips extending around a respective part of the periphery of the plunger, in a space between the plunger and the device housing, each strip being connected with the plunger and with the device housing.

23. The injector device assembly of claim 22, wherein the strips are integrally molded with said plunger and said device housing.

24. The injector device assembly of claim 22 or **23**, each strip being essentially plane and non-deformed in the advanced position of the plunger.

25. The injector device assembly of claim 24, two strips extending in a common plane around a respective part of said periphery of said plunger, and two further strips extending in a second plane around a respective part of said periphery, in said advanced position of said plunger.

26. The injector device assembly of claim 16, wherein said strips and said plunger are molded as a unitary component, said unitary component being connected to said housing.

27. The injector device assembly of claim 16, wherein the insertion needle is secured to said plunger by press-fit.

28. The injector device assembly of claim 16, wherein the insertion needle is hollow and has an entry port and an exit port.

29. The injector device assembly of claim 16, wherein a removable cover covering said infusion set received on said insertion needle includes a hollow for receiving a part of said insertion needle when said plunger is in said advanced position.

30. The injector device assembly of claim 29, said cover being repositionable for covering said insertion needle subsequent to removal of said infusion set.

31. The injector device assembly of claim 16; said trigger releasing said plunger by manual deformation of said housing.

32. An injector device, comprising:

a molded device housing,

a molded plunger slidably received within the device housing for movement between an advanced position and a retracted position,

a lock for releasably locking said plunger in said retracted position, said housing being manually deformable to effect release of said plunger,

a drive for urging the plunger from the retracted position towards the advanced position,

wherein the drive comprises a number of individual flexible plastics members **(136)**, each member being connected with the plunger and with the device housing.

33. The injector device of claim 32 wherein each flexible plastics member is formed as a strip, the device including at least two such strips, each strip extending around a respective part of the periphery of the plunger.

34. The injector device of claim 33, wherein each of said strips is connected with the plunger and with the device housing, said connections being at different peripheral locations around the plunger.

35. The injector device of claim 33 or **34**, wherein each strip is essentially plane and non-deformed in the advanced position of the plunger.

36. The injector device of claim 33, wherein said strips and said plunger are molded as a unitary component, said unitary component being connected to said housing.

37. The injector device of claim -**32**, each of said flexible members extending in a space between the plunger and the device housing.

38. The injector device of any of claim 32, used for transcutaneously placing an insertion needle of a medical device through the skin of a patient.

39. The injector device according to claim 38, wherein said insertion needle is substantially non-detachably secured to said plunger.

40. The injector device of claim 38 or **39**, wherein said insertion needle is hollow and has a lateral opening near said plunger.

41. The injector device of claim 32, including manual engagement areas for the manual deformation of said housing to effect said release of said plunger.

42. The injector device of claim 41, said manual engagement areas being diametrically opposed on said housing and being peripherally offset with respect to said lock, preferably by 90°, or about 90°.

43. The injector device of claim 42, said manual engagement areas being of fingertip size.

44. The injector device of claim 13, including manual engagement areas for the manual deformation of said housing to effect said release of said plunger.

45. The injector device of claim 44, said manual engagement areas being diametrically opposed on said housing and being peripherally offset with respect to said lock, preferably by 90°, or about 90°.

46. The injector device of claim 45, said manual engagement areas being of fingertip size.

47. The injector device of claim 31, including manual engagement areas for the manual deformation of said housing to effect said release of said plunger, said housing including a lock for retaining the plunger in said retracted position.

48. The injector device of claim 47, said manual engagement areas being diametrically opposed on said housing and being peripherally offset with respect to said lock, preferably by 90°**0**, or about 90°.

49. The injector device of claim 48, said manual engagement areas being of fingertip size.

* * * * *