UNITED STATES PATENT AND TRADEMARK OFFICE

UNITED STATES DEPARTMENT OF COMMERCE
United States Patent and Trademark Office
Address: COMMISSIONER FOR PATENTS
P.O. Box 1450
Alexandria, Virginia 22313-1450
www.uspto.gov

APPLICATION NO.	ISSUE DATE	PATENT NO.	ATTORNEY DOCKET NO.	CONFIRMATION NO.
13/925,694	04/12/2016	9310230	A0130.0090.C1	8030

95508 7590 03/23/2016

One LLP
4000 MacArthur Blvd.
East Tower, Suite 500
Newport Beach, CA 92660

ISSUE NOTIFICATION

The projected patent number and issue date are specified above.

Determination of Patent Term Adjustment under 35 U.S.C. 154 (b)
(application filed on or after May 29, 2000)

The Patent Term Adjustment is 33 day(s). Any patent to issue from the above-identified application will include an indication of the adjustment on the front page.

If a Continued Prosecution Application (CPA) was filed in the above-identified application, the filing date that determines Patent Term Adjustment is the filing date of the most recent CPA.

Applicant will be able to obtain more detailed information by accessing the Patent Application Information Retrieval (PAIR) WEB site (http://pair.uspto.gov).

Any questions regarding the Patent Term Extension or Adjustment determination should be directed to the Office of Patent Legal Administration at (571)-272-7702. Questions relating to issue and publication fee payments should be directed to the Application Assistance Unit (AAU) of the Office of Data Management (ODM) at (571)-272-4200.

APPLICANT(s) (Please see PAIR WEB site http://pair.uspto.gov for additional applicants):

Abbott Diabetes Care Inc., Alameda, CA;
Wesley Scott Harper, Alameda, CA;

The United States represents the largest, most dynamic marketplace in the world and is an unparalleled location for business investment, innovation, and commercialization of new technologies. The USA offers tremendous resources and advantages for those who invest and manufacture goods here. Through SelectUSA, our nation works to encourage and facilitate business investment. To learn more about why the USA is the best country in the world to develop technology, manufacture products, and grow your business, visit SelectUSA.gov.

DEXCOM
EXHIBIT 1206

PART B - FEE(S) TRANSMITTAL

Complete and send this form, together with applicable fee(s), to: Mail **Mail Stop ISSUE FEE**
Commissioner for Patents
P.O. Box 1450
Alexandria, Virginia 22313-1450
or Fax (571)-273-2885

INSTRUCTIONS: This form should be used for transmitting the ISSUE FEE and PUBLICATION FEE (if required). Blocks 1 through 5 should be completed where appropriate. All further correspondence including the Patent, advance orders and notification of maintenance fees will be mailed to the current correspondence address as indicated unless corrected below or directed otherwise in Block 1, by (a) specifying a new correspondence address; and/or (b) indicating a separate "FEE ADDRESS" for maintenance fee notifications.

CURRENT CORRESPONDENCE ADDRESS (Note: Use Block 1 for any change of address)

95598 7590 12/11/2015
One LLP
4000 MacArthur Blvd.
East Tower, Suite 500
Newport Beach, CA 92660

Note: A certificate of mailing can only be used for domestic mailings of the Fee(s) Transmittal. This certificate cannot be used for any other accompanying papers. Each additional paper, such as an assignment or formal drawing, must have its own certificate of mailing or transmission.

Certificate of Mailing or Transmission
I hereby certify that this Fee(s) Transmittal is being deposited with the United States Postal Service with sufficient postage for first class mail in an envelope addressed to the Mail Stop ISSUE FEE address above, or being facsimile transmitted to the USPTO (571) 273-2885, on the date indicated below.

(Depositor's name)
(Signature)
(Date)

APPLICATION NO.	FILING DATE	FIRST NAMED INVENTOR	ATTORNEY DOCKET NO.	CONFIRMATION NO.
13/925,694	06/24/2013	Wesley Scott Harper	A0130.0090.C1	8030

TITLE OF INVENTION: Method and System for Providing Real Time Analyte Sensor Calibration with Retrospective Backfill

APPLN. TYPE	ENTITY STATUS	ISSUE FEE DUE	PUBLICATION FEE DUE	PREV. PAID ISSUE FEE	TOTAL FEE(S) DUE	DATE DUE
nonprovisional	UNDISCOUNTED	$960	$0	$0	$960	03/11/2016

EXAMINER	ART UNIT	CLASS-SUBCLASS
LIN, JERRY	1631	702-019000

1. Change of correspondence address or indication of "Fee Address" (37 CFR 1.363).
- ☐ Change of correspondence address (or Change of Correspondence Address form PTO/SB/122) attached.
- ☐ "Fee Address" indication (or "Fee Address" Indication form PTO/SB/47; Rev 03-02 or more recent) attached. **Use of a Customer Number is required.**

2. For printing on the patent front page, list
(1) The names of up to 3 registered patent attorneys or agents OR, alternatively,
(2) The name of a single firm (having as a member a registered attorney or agent) and the names of up to 2 registered patent attorneys or agents. If no name is listed, no name will be printed.

1 ONE LLP
2
3

3. ASSIGNEE NAME AND RESIDENCE DATA TO BE PRINTED ON THE PATENT (print or type)

PLEASE NOTE: Unless an assignee is identified below, no assignee data will appear on the patent. If an assignee is identified below, the document has been filed for recordation as set forth in 37 CFR 3.11. Completion of this form is NOT a substitute for filing an assignment.

(A) NAME OF ASSIGNEE
ABBOTT DIABETES CARE INC.

(B) RESIDENCE: (CITY and STATE OR COUNTRY)
Alameda, CA

Please check the appropriate assignee category or categories (will not be printed on the patent): ☐ Individual ☒ Corporation or other private group entity ☐ Government

4a. The following fee(s) are submitted:
- ☒ Issue Fee
- ☐ Publication Fee (No small entity discount permitted)
- ☐ Advance Order - # of Copies .....

4b. Payment of Fee(s): **(Please first reapply any previously paid issue fee shown above)**
- ☐ A check is enclosed.
- ☒ Payment by credit card. Form PTO-2038 is attached.
- ☐ The director is hereby authorized to charge the required fee(s), any deficiency, or credits any overpayment, to Deposit Account Number ..... (enclose an extra copy of this form).

5. **Change in Entity Status** (from status indicated above)
- ☐ Applicant certifying micro entity status. See 37 CFR 1.29 — NOTE: Absent a valid certification of Micro Entity Status (see forms PTO/SB/15A and 15B), issue fee payment in the micro entity amount will not be accepted at the risk of application abandonment.
- ☐ Applicant asserting small entity status. See 37 CFR 1.27 — NOTE: If the application was previously under micro entity status, checking this box will be taken to be a notification of loss of entitlement to micro entity status.
- ☐ Applicant changing to regular undiscounted fee status. — NOTE: Checking this box will be taken to be a notification of loss of entitlement to small or micro entity status, as applicable.

NOTE: This form must be signed in accordance with 37 CFR 1.31 and 1.33. See 37 CFR 1.4 for signature requirements and certifications.

Authorized Signature /Mark Stirrat/ Date March 8, 2016
Typed or printed name Mark Stirrat Registration No. 50,756

Electronic Patent Application Fee Transmittal

Application Number:	13925694
Filing Date:	24-Jun-2013
Title of Invention:	Method and System for Providing Real Time Analyte Sensor Calibration with Retrospective Backfill
First Named Inventor/Applicant Name:	Wesley Scott Harper
Filer:	Mark Andrew Stirrat/Alana Fredericks
Attorney Docket Number:	A0130.0090.C1

Filed as Large Entity

Filing Fees for Utility under 35 USC 111(a)

Description	Fee Code	Quantity	Amount	Sub-Total in USD($)
Basic Filing:				
Pages:				
Claims:				
Miscellaneous-Filing:				
Petition:				
Patent-Appeals-and-Interference:				
Post-Allowance-and-Post-Issuance:				
Utility Appl Issue Fee	1501	1	960	960

Description	Fee Code	Quantity	Amount	Sub-Total in USD($)
Extension-of-Time:				
Miscellaneous:				
			Total in USD ($)	**960**

Electronic Acknowledgement Receipt

EFS ID:	25135368
Application Number:	13925694
International Application Number:	
Confirmation Number:	8030
Title of Invention:	Method and System for Providing Real Time Analyte Sensor Calibration with Retrospective Backfill
First Named Inventor/Applicant Name:	Wesley Scott Harper
Customer Number:	95508
Filer:	Mark Andrew Stirrat/Alana Fredericks
Filer Authorized By:	Mark Andrew Stirrat
Attorney Docket Number:	A0130.0090.C1
Receipt Date:	08-MAR-2016
Filing Date:	24-JUN-2013
Time Stamp:	17:50:34
Application Type:	Utility under 35 USC 111(a)

Payment information:

Submitted with Payment	yes
Payment Type	Credit Card
Payment was successfully received in RAM	$960
RAM confirmation Number	4753
Deposit Account	
Authorized User	
The Director of the USPTO is hereby authorized to charge indicated fees and credit any overpayment as follows:	

File Listing:

Document Number	Document Description	File Name	File Size(Bytes)/ Message Digest	Multi Part /.zip	Pages (if appl.)
1	Issue Fee Payment (PTO-85B)	9368USC1_A0130_0090_C1_Issue_Fee_Transmittal.pdf	308604 2602344577e3a1839189a8fd6d55b4c27e0b4fee	no	1
Warnings:					
Information:					
2	Fee Worksheet (SB06)	fee-info.pdf	30749 d405bd1e5bde007f3a8b7c40ea1e2ce099fa1225	no	2
Warnings:					
Information:					
		Total Files Size (in bytes):	339353		

This Acknowledgement Receipt evidences receipt on the noted date by the USPTO of the indicated documents, characterized by the applicant, and including page counts, where applicable. It serves as evidence of receipt similar to a Post Card, as described in MPEP 503.

New Applications Under 35 U.S.C. 111
If a new application is being filed and the application includes the necessary components for a filing date (see 37 CFR 1.53(b)-(d) and MPEP 506), a Filing Receipt (37 CFR 1.54) will be issued in due course and the date shown on this Acknowledgement Receipt will establish the filing date of the application.

National Stage of an International Application under 35 U.S.C. 371
If a timely submission to enter the national stage of an international application is compliant with the conditions of 35 U.S.C. 371 and other applicable requirements a Form PCT/DO/EO/903 indicating acceptance of the application as a national stage submission under 35 U.S.C. 371 will be issued in addition to the Filing Receipt, in due course.

New International Application Filed with the USPTO as a Receiving Office
If a new international application is being filed and the international application includes the necessary components for an international filing date (see PCT Article 11 and MPEP 1810), a Notification of the International Application Number and of the International Filing Date (Form PCT/RO/105) will be issued in due course, subject to prescriptions concerning national security, and the date shown on this Acknowledgement Receipt will establish the international filing date of the application.

UNITED STATES PATENT AND TRADEMARK OFFICE

UNITED STATES DEPARTMENT OF COMMERCE
United States Patent and Trademark Office
Address: COMMISSIONER FOR PATENTS
P.O. Box 1450
Alexandria, Virginia 22313-1450
www.uspto.gov

NOTICE OF ALLOWANCE AND FEE(S) DUE

95508 7590 12/11/2015
One LLP
4000 MacArthur Blvd.
East Tower, Suite 500
Newport Beach, CA 92660

EXAMINER
LIN, JERRY

ART UNIT	PAPER NUMBER
1631	

DATE MAILED: 12/11/2015

APPLICATION NO.	FILING DATE	FIRST NAMED INVENTOR	ATTORNEY DOCKET NO.	CONFIRMATION NO.
13/925,694	06/24/2013	Wesley Scott Harper	A0130.0090.C1	8030

TITLE OF INVENTION: Method and System for Providing Real Time Analyte Sensor Calibration with Retrospective Backfill

APPLN. TYPE	ENTITY STATUS	ISSUE FEE DUE	PUBLICATION FEE DUE	PREV. PAID ISSUE FEE	TOTAL FEE(S) DUE	DATE DUE
nonprovisional	UNDISCOUNTED	$960	$0	$0	$960	03/11/2016

THE APPLICATION IDENTIFIED ABOVE HAS BEEN EXAMINED AND IS ALLOWED FOR ISSUANCE AS A PATENT. PROSECUTION ON THE MERITS IS CLOSED. THIS NOTICE OF ALLOWANCE IS NOT A GRANT OF PATENT RIGHTS. THIS APPLICATION IS SUBJECT TO WITHDRAWAL FROM ISSUE AT THE INITIATIVE OF THE OFFICE OR UPON PETITION BY THE APPLICANT. SEE 37 CFR 1.313 AND MPEP 1308.

THE ISSUE FEE AND PUBLICATION FEE (IF REQUIRED) MUST BE PAID WITHIN THREE MONTHS FROM THE MAILING DATE OF THIS NOTICE OR THIS APPLICATION SHALL BE REGARDED AS ABANDONED. THIS STATUTORY PERIOD CANNOT BE EXTENDED. SEE 35 U.S.C. 151. THE ISSUE FEE DUE INDICATED ABOVE DOES NOT REFLECT A CREDIT FOR ANY PREVIOUSLY PAID ISSUE FEE IN THIS APPLICATION. IF AN ISSUE FEE HAS PREVIOUSLY BEEN PAID IN THIS APPLICATION (AS SHOWN ABOVE), THE RETURN OF PART B OF THIS FORM WILL BE CONSIDERED A REQUEST TO REAPPLY THE PREVIOUSLY PAID ISSUE FEE TOWARD THE ISSUE FEE NOW DUE.

HOW TO REPLY TO THIS NOTICE:

I. Review the ENTITY STATUS shown above. If the ENTITY STATUS is shown as SMALL or MICRO, verify whether entitlement to that entity status still applies.

If the ENTITY STATUS is the same as shown above, pay the TOTAL FEE(S) DUE shown above.

If the ENTITY STATUS is changed from that shown above, on PART B - FEE(S) TRANSMITTAL, complete section number 5 titled "Change in Entity Status (from status indicated above)".

For purposes of this notice, small entity fees are 1/2 the amount of undiscounted fees, and micro entity fees are 1/2 the amount of small entity fees.

II. PART B - FEE(S) TRANSMITTAL, or its equivalent, must be completed and returned to the United States Patent and Trademark Office (USPTO) with your ISSUE FEE and PUBLICATION FEE (if required). If you are charging the fee(s) to your deposit account, section "4b" of Part B - Fee(s) Transmittal should be completed and an extra copy of the form should be submitted. If an equivalent of Part B is filed, a request to reapply a previously paid issue fee must be clearly made, and delays in processing may occur due to the difficulty in recognizing the paper as an equivalent of Part B.

III. All communications regarding this application must give the application number. Please direct all communications prior to issuance to Mail Stop ISSUE FEE unless advised to the contrary.

IMPORTANT REMINDER: Utility patents issuing on applications filed on or after Dec. 12, 1980 may require payment of maintenance fees. It is patentee's responsibility to ensure timely payment of maintenance fees when due.

PART B - FEE(S) TRANSMITTAL

Complete and send this form, together with applicable fee(s), to: Mail **Mail Stop ISSUE FEE**
Commissioner for Patents
P.O. Box 1450
Alexandria, Virginia 22313-1450
or Fax (571)-273-2885

INSTRUCTIONS: This form should be used for transmitting the ISSUE FEE and PUBLICATION FEE (if required). Blocks 1 through 5 should be completed where appropriate. All further correspondence including the Patent, advance orders and notification of maintenance fees will be mailed to the current correspondence address as indicated unless corrected below or directed otherwise in Block 1, by (a) specifying a new correspondence address; and/or (b) indicating a separate "FEE ADDRESS" for maintenance fee notifications.

CURRENT CORRESPONDENCE ADDRESS (Note: Use Block 1 for any change of address)

95508 7590 12/11/2015

One LLP
4000 MacArthur Blvd.
East Tower, Suite 500
Newport Beach, CA 92660

Note: A certificate of mailing can only be used for domestic mailings of the Fee(s) Transmittal. This certificate cannot be used for any other accompanying papers. Each additional paper, such as an assignment or formal drawing, must have its own certificate of mailing or transmission.

Certificate of Mailing or Transmission

I hereby certify that this Fee(s) Transmittal is being deposited with the United States Postal Service with sufficient postage for first class mail in an envelope addressed to the Mail Stop ISSUE FEE address above, or being facsimile transmitted to the USPTO (571) 273-2885, on the date indicated below.

(Depositor's name)

(Signature)

(Date)

APPLICATION NO.	FILING DATE	FIRST NAMED INVENTOR	ATTORNEY DOCKET NO.	CONFIRMATION NO.
13/925,694	06/24/2013	Wesley Scott Harper	A0130.0090.C1	8030

TITLE OF INVENTION: Method and System for Providing Real Time Analyte Sensor Calibration with Retrospective Backfill

APPLN. TYPE	ENTITY STATUS	ISSUE FEE DUE	PUBLICATION FEE DUE	PREV. PAID ISSUE FEE	TOTAL FEE(S) DUE	DATE DUE
nonprovisional	UNDISCOUNTED	$960	$0	$0	$960	03/11/2016

EXAMINER	ART UNIT	CLASS-SUBCLASS
LIN, JERRY	1631	702-019000

1. Change of correspondence address or indication of "Fee Address" (37 CFR 1.363).

❑ Change of correspondence address (or Change of Correspondence Address form PTO/SB/122) attached.

❑ "Fee Address" indication (or "Fee Address" Indication form PTO/SB/47; Rev 03-02 or more recent) attached. **Use of a Customer Number is required.**

2. For printing on the patent front page, list

(1) The names of up to 3 registered patent attorneys or agents OR, alternatively,

(2) The name of a single firm (having as a member a registered attorney or agent) and the names of up to 2 registered patent attorneys or agents. If no name is listed, no name will be printed.

1_____

2_____

3_____

3. ASSIGNEE NAME AND RESIDENCE DATA TO BE PRINTED ON THE PATENT (print or type)

PLEASE NOTE: Unless an assignee is identified below, no assignee data will appear on the patent. If an assignee is identified below, the document has been filed for recordation as set forth in 37 CFR 3.11. Completion of this form is NOT a substitute for filing an assignment.

(A) NAME OF ASSIGNEE

(B) RESIDENCE: (CITY and STATE OR COUNTRY)

Please check the appropriate assignee category or categories (will not be printed on the patent) : ❑ Individual ❑ Corporation or other private group entity ❑ Government

4a. The following fee(s) are submitted:

❑ Issue Fee

❑ Publication Fee (No small entity discount permitted)

❑ Advance Order - # of Copies _____

4b. Payment of Fee(s): (**Please first reapply any previously paid issue fee shown above)**

❑ A check is enclosed.

❑ Payment by credit card. Form PTO-2038 is attached.

❑ The director is hereby authorized to charge the required fee(s), any deficiency, or credits any overpayment, to Deposit Account Number _____ (enclose an extra copy of this form).

5. **Change in Entity Status** (from status indicated above)

❑ Applicant certifying micro entity status. See 37 CFR 1.29

NOTE: Absent a valid certification of Micro Entity Status (see forms PTO/SB/15A and 15B), issue fee payment in the micro entity amount will not be accepted at the risk of application abandonment.

❑ Applicant asserting small entity status. See 37 CFR 1.27

NOTE: If the application was previously under micro entity status, checking this box will be taken to be a notification of loss of entitlement to micro entity status.

❑ Applicant changing to regular undiscounted fee status.

NOTE: Checking this box will be taken to be a notification of loss of entitlement to small or micro entity status, as applicable.

NOTE: This form must be signed in accordance with 37 CFR 1.31 and 1.33. See 37 CFR 1.4 for signature requirements and certifications.

Authorized Signature _____ Date _____

Typed or printed name _____ Registration No. _____

UNITED STATES PATENT AND TRADEMARK OFFICE

UNITED STATES DEPARTMENT OF COMMERCE
United States Patent and Trademark Office
Address: COMMISSIONER FOR PATENTS
P.O. Box 1450
Alexandria, Virginia 22313-1450
www.uspto.gov

APPLICATION NO.	FILING DATE	FIRST NAMED INVENTOR	ATTORNEY DOCKET NO.	CONFIRMATION NO.
13/925,694	06/24/2013	Wesley Scott Harper	A0130.0090.C1	8030

95508 7590 12/11/2015
One LLP
4000 MacArthur Blvd.
East Tower, Suite 500
Newport Beach, CA 92660

EXAMINER
LIN, JERRY

ART UNIT	PAPER NUMBER
1631	

DATE MAILED: 12/11/2015

Determination of Patent Term Adjustment under 35 U.S.C. 154 (b)
(Applications filed on or after May 29, 2000)

The Office has discontinued providing a Patent Term Adjustment (PTA) calculation with the Notice of Allowance.

Section 1(h)(2) of the AIA Technical Corrections Act amended 35 U.S.C. 154(b)(3)(B)(i) to eliminate the requirement that the Office provide a patent term adjustment determination with the notice of allowance. See Revisions to Patent Term Adjustment, 78 Fed. Reg. 19416, 19417 (Apr. 1, 2013). Therefore, the Office is no longer providing an initial patent term adjustment determination with the notice of allowance. The Office will continue to provide a patent term adjustment determination with the Issue Notification Letter that is mailed to applicant approximately three weeks prior to the issue date of the patent, and will include the patent term adjustment on the patent. Any request for reconsideration of the patent term adjustment determination (or reinstatement of patent term adjustment) should follow the process outlined in 37 CFR 1.705.

Any questions regarding the Patent Term Extension or Adjustment determination should be directed to the Office of Patent Legal Administration at (571)-272-7702. Questions relating to issue and publication fee payments should be directed to the Customer Service Center of the Office of Patent Publication at 1-(888)-786-0101 or (571)-272-4200.

OMB Clearance and PRA Burden Statement for PTOL-85 Part B

The Paperwork Reduction Act (PRA) of 1995 requires Federal agencies to obtain Office of Management and Budget approval before requesting most types of information from the public. When OMB approves an agency request to collect information from the public, OMB (i) provides a valid OMB Control Number and expiration date for the agency to display on the instrument that will be used to collect the information and (ii) requires the agency to inform the public about the OMB Control Number's legal significance in accordance with 5 CFR 1320.5(b).

The information collected by PTOL-85 Part B is required by 37 CFR 1.311. The information is required to obtain or retain a benefit by the public which is to file (and by the USPTO to process) an application. Confidentiality is governed by 35 U.S.C. 122 and 37 CFR 1.14. This collection is estimated to take 12 minutes to complete, including gathering, preparing, and submitting the completed application form to the USPTO. Time will vary depending upon the individual case. Any comments on the amount of time you require to complete this form and/or suggestions for reducing this burden, should be sent to the Chief Information Officer, U.S. Patent and Trademark Office, U.S. Department of Commerce, P.O. Box 1450, Alexandria, Virginia 22313-1450. DO NOT SEND FEES OR COMPLETED FORMS TO THIS ADDRESS. SEND TO: Commissioner for Patents, P.O. Box 1450, Alexandria, Virginia 22313-1450. Under the Paperwork Reduction Act of 1995, no persons are required to respond to a collection of information unless it displays a valid OMB control number.

Privacy Act Statement

The Privacy Act of 1974 (P.L. 93-579) requires that you be given certain information in connection with your submission of the attached form related to a patent application or patent. Accordingly, pursuant to the requirements of the Act, please be advised that: (1) the general authority for the collection of this information is 35 U.S.C. 2(b)(2); (2) furnishing of the information solicited is voluntary; and (3) the principal purpose for which the information is used by the U.S. Patent and Trademark Office is to process and/or examine your submission related to a patent application or patent. If you do not furnish the requested information, the U.S. Patent and Trademark Office may not be able to process and/or examine your submission, which may result in termination of proceedings or abandonment of the application or expiration of the patent.

The information provided by you in this form will be subject to the following routine uses:

1. The information on this form will be treated confidentially to the extent allowed under the Freedom of Information Act (5 U.S.C. 552) and the Privacy Act (5 U.S.C 552a). Records from this system of records may be disclosed to the Department of Justice to determine whether disclosure of these records is required by the Freedom of Information Act.
2. A record from this system of records may be disclosed, as a routine use, in the course of presenting evidence to a court, magistrate, or administrative tribunal, including disclosures to opposing counsel in the course of settlement negotiations.
3. A record in this system of records may be disclosed, as a routine use, to a Member of Congress submitting a request involving an individual, to whom the record pertains, when the individual has requested assistance from the Member with respect to the subject matter of the record.
4. A record in this system of records may be disclosed, as a routine use, to a contractor of the Agency having need for the information in order to perform a contract. Recipients of information shall be required to comply with the requirements of the Privacy Act of 1974, as amended, pursuant to 5 U.S.C. 552a(m).
5. A record related to an International Application filed under the Patent Cooperation Treaty in this system of records may be disclosed, as a routine use, to the International Bureau of the World Intellectual Property Organization, pursuant to the Patent Cooperation Treaty.
6. A record in this system of records may be disclosed, as a routine use, to another federal agency for purposes of National Security review (35 U.S.C. 181) and for review pursuant to the Atomic Energy Act (42 U.S.C. 218(c)).
7. A record from this system of records may be disclosed, as a routine use, to the Administrator, General Services, or his/her designee, during an inspection of records conducted by GSA as part of that agency's responsibility to recommend improvements in records management practices and programs, under authority of 44 U.S.C. 2904 and 2906. Such disclosure shall be made in accordance with the GSA regulations governing inspection of records for this purpose, and any other relevant (i.e., GSA or Commerce) directive. Such disclosure shall not be used to make determinations about individuals.
8. A record from this system of records may be disclosed, as a routine use, to the public after either publication of the application pursuant to 35 U.S.C. 122(b) or issuance of a patent pursuant to 35 U.S.C. 151. Further, a record may be disclosed, subject to the limitations of 37 CFR 1.14, as a routine use, to the public if the record was filed in an application which became abandoned or in which the proceedings were terminated and which application is referenced by either a published application, an application open to public inspection or an issued patent.
9. A record from this system of records may be disclosed, as a routine use, to a Federal, State, or local law enforcement agency, if the USPTO becomes aware of a violation or potential violation of law or regulation.

Notice of Allowability	Application No. 13/925,694	Applicant(s) HARPER, WESLEY SCOTT	
	Examiner JERRY LIN	Art Unit 1631	AIA (First Inventor to File) Status No

-- The MAILING DATE of this communication appears on the cover sheet with the correspondence address--

All claims being allowable, PROSECUTION ON THE MERITS IS (OR REMAINS) CLOSED in this application. If not included herewith (or previously mailed), a Notice of Allowance (PTOL-85) or other appropriate communication will be mailed in due course. **THIS NOTICE OF ALLOWABILITY IS NOT A GRANT OF PATENT RIGHTS.** This application is subject to withdrawal from issue at the initiative of the Office or upon petition by the applicant. See 37 CFR 1.313 and MPEP 1308.

1. ☒ This communication is responsive to *the terminal disclaimer filed November 9, 2015*.
   ☐ A declaration(s)/affidavit(s) under **37 CFR 1.130(b)** was/were filed on_____.
2. ☐ An election was made by the applicant in response to a restriction requirement set forth during the interview on _____; the restriction requirement and election have been incorporated into this action.
3. ☒ The allowed claim(s) is/are *21-40*. As a result of the allowed claim(s), you may be eligible to benefit from the **Patent Prosecution Highway** program at a participating intellectual property office for the corresponding application. For more information, please see http://www.uspto.gov/patents/init_events/pph/index.jsp or send an inquiry to PPHfeedback@uspto.gov .
4. ☐ Acknowledgment is made of a claim for foreign priority under 35 U.S.C. § 119(a)-(d) or (f).

   Certified copies:

   a) ☐ All b) ☐ Some *c) ☐ None of the:
   1. ☐ Certified copies of the priority documents have been received.
   2. ☐ Certified copies of the priority documents have been received in Application No. _____ .
   3. ☐ Copies of the certified copies of the priority documents have been received in this national stage application from the International Bureau (PCT Rule 17.2(a)).

   * Certified copies not received: _____.

Applicant has THREE MONTHS FROM THE "MAILING DATE" of this communication to file a reply complying with the requirements noted below. Failure to timely comply will result in ABANDONMENT of this application.
THIS THREE-MONTH PERIOD IS NOT EXTENDABLE.

5. ☐ CORRECTED DRAWINGS (as "replacement sheets") must be submitted.
   ☐ including changes required by the attached Examiner's Amendment / Comment or in the Office action of Paper No./Mail Date _____.

   Identifying indicia such as the application number (see 37 CFR 1.84(c)) should be written on the drawings in the front (not the back) of each sheet. Replacement sheet(s) should be labeled as such in the header according to 37 CFR 1.121(d).
6. ☐ DEPOSIT OF and/or INFORMATION about the deposit of BIOLOGICAL MATERIAL must be submitted. Note the attached Examiner's comment regarding REQUIREMENT FOR THE DEPOSIT OF BIOLOGICAL MATERIAL.

Attachment(s)

1. ☐ Notice of References Cited (PTO-892)
2. ☐ Information Disclosure Statements (PTO/SB/08), Paper No./Mail Date _____
3. ☐ Examiner's Comment Regarding Requirement for Deposit of Biological Material
4. ☐ Interview Summary (PTO-413), Paper No./Mail Date _____ .
5. ☐ Examiner's Amendment/Comment
6. ☒ Examiner's Statement of Reasons for Allowance
7. ☐ Other _____.

/JERRY LIN/
Primary Examiner, Art Unit 1631

REASONS FOR ALLOWANCE

The present application is being examined under the pre-AIA first to invent provisions.

The following is an examiner's statement of reasons for allowance: The prior art does not teach disabling the output of the sensor during an adverse condition time period, storing data collected during the adverse condition time, determining that adverse conditions are no longer present, and retrieving and processing the data to fill in the gap of the adverse condition time. Furthermore, the recited invention affects a particular machine by disabling the sensor and enabling the sensor again once certain conditions have been met. Thus, the claimed invention has something significantly more than a judicial exception.

Any comments considered necessary by applicant must be submitted no later than the payment of the issue fee and, to avoid processing delays, should preferably accompany the issue fee. Such submissions should be clearly labeled "Comments on Statement of Reasons for Allowance."

Terminal Disclaimer

The terminal disclaimer filed on November 9, 2015 disclaiming the terminal portion of any patent granted on this application which would extend beyond the expiration date of U.S. Patent No. 8,483,967 has been reviewed and is accepted. The terminal disclaimer has been recorded.

Contact Information

Any inquiry concerning this communication or earlier communications from the examiner should be directed to JERRY LIN whose telephone number is (571)272-2561. The examiner can normally be reached on Mon, Tues, Thurs, and Fri, 5:30 am-4 pm.

If attempts to reach the examiner by telephone are unsuccessful, the examiner's supervisor, Peter Paras can be reached on (571) 272-4517. The fax phone number for the organization where this application or proceeding is assigned is 571-273-8300.

Information regarding the status of an application may be obtained from the Patent Application Information Retrieval (PAIR) system. Status information for published applications may be obtained from either Private PAIR or Public PAIR. Status information for unpublished applications is available through Private PAIR only. For more information about the PAIR system, see http://pair-direct.uspto.gov. Should you have questions on access to the Private PAIR system, contact the Electronic Business Center (EBC) at 866-217-9197 (toll-free). If you would like assistance from a USPTO Customer Service Representative or access to the automated information system, call 800-786-9199 (IN USA OR CANADA) or 571-272-1000.

/JERRY LIN/
Primary Examiner, Art Unit 1631

Issue Classification	Application/Control No.	Applicant(s)/Patent Under Reexamination
	13925694	HARPER, WESLEY SCOTT
	Examiner	**Art Unit**
	JERRY LIN	1631

CPC

Symbol					Type	Version
G01D		18	/	00	F	2013-01-01
A61B		5	/	14532	I	2013-01-01
A61B		5	/	1473	I	2013-01-01
A61B		5	/	1495	I	2013-01-01
G06F		19	/	3412	I	2013-01-01
G01N		31	/	22	I	2013-01-01
G01N		33	/	66	I	2013-01-01
			/			
			/			
			/			
			/			
			/			
			/			
			/			
			/			

CPC Combination Sets

Symbol					Type	Set	Ranking	Version
			/					
			/					

NONE (Assistant Examiner) (Date)	**Total Claims Allowed:** 20	
/JERRY LIN/ Primary Examiner.Art Unit 1631 (Primary Examiner) (Date)	O.G. Print Claim(s) None	O.G. Print Figure None

Issue Classification	Application/Control No.	Applicant(s)/Patent Under Reexamination
	13925694	HARPER, WESLEY SCOTT
	Examiner	**Art Unit**
	JERRY LIN	1631

US ORIGINAL CLASSIFICATION		INTERNATIONAL CLASSIFICATION	
CLASS	SUBCLASS	CLAIMED	NON-CLAIMED
702	19	G 0 1 N 33 / 48 (2006.01.01)	

CROSS REFERENCE(S)					
CLASS	SUBCLASS (ONE SUBCLASS PER BLOCK)				

NONE (Assistant Examiner) (Date)	**Total Claims Allowed:** 20	
/JERRY LIN/ Primary Examiner.Art Unit 1631 (Primary Examiner) (Date)	O.G. Print Claim(s) None	O.G. Print Figure None

Issue Classification	Application/Control No.	Applicant(s)/Patent Under Reexamination
	13925694	HARPER, WESLEY SCOTT
	Examiner	**Art Unit**
	JERRY LIN	1631

☒ **Claims renumbered in the same order as presented by applicant** ☐ **CPA** ☐ **T.D.** ☐ **R.1.47**

Final	Original	Final	Original	Final	Original	Final	Original	Final	Original	Final	Original	Final	Original	Final	Original

NONE (Assistant Examiner) (Date)	**Total Claims Allowed:** 20	
/JERRY LIN/ Primary Examiner.Art Unit 1631 (Primary Examiner) (Date)	O.G. Print Claim(s) None	O.G. Print Figure None

Search Notes	Application/Control No.	Applicant(s)/Patent Under Reexamination
	13925694	HARPER, WESLEY SCOTT
	Examiner	**Art Unit**
	JERRY LIN	1631

CPC- SEARCHED

Symbol	Date	Examiner
G06F19/3412	12/7/2015	JL

CPC COMBINATION SETS - SEARCHED

Symbol	Date	Examiner

US CLASSIFICATION SEARCHED

Class	Subclass	Date	Examiner
702	19	12/7/2015	JL

SEARCH NOTES

Search Notes	Date	Examiner
See printout	12/20/2014	JL
Inventor Search in palm	12/20/2014	JL
updated	12/7/2015	JL

INTERFERENCE SEARCH

US Class/ CPC Symbol	US Subclass / CPC Group	Date	Examiner
702	19	12/7/2015	JL
G06F19	3412	12/7/2015	JL

Docket Nos.: A0130.0090.C1
9368USC1

IN THE UNITED STATES PATENT AND TRADEMARK OFFICE

In re Patent Application of:
Wesley Scott Harper et al.

Application No.: 13/925,694 | Confirmation No.: 8030

Filed: June 24, 2013 | Art Unit: 1631

For: METHOD AND SYSTEM FOR PROVIDING REAL TIME ANALYTE SENSOR CALIBRATION WITH RETROSPECTIVE BACKFILL | Examiner: Jerry Lin

OK TO ENTER: /J.L./
12/07/2015

RESPONSE TO FINAL OFFICE ACTION UNDER 37 C.F.R. 1.113

EFS Web
Commissioner for Patents

Dear Madam:

INTRODUCTORY COMMENTS

In response to the Final Office Action dated September 16, 2015, please see the following:

A **Listing of the Claims** beginning on page 2 of this paper; and

Remarks beginning on page 7 of this paper.

```
     (FILE 'HOME' ENTERED AT 15:53:41 ON 07 DEC 2015)

     FILE 'MEDLINE, EMBASE, BIOSIS, COMPUSCIENCE' ENTERED AT 15:53:52 ON 07
     DEC 2015
L1          7974 S ANALYTE AND SENSOR
L2           655 S L1 AND (CALIBRATION OR CALIBRATING)
L3            33 S L2 AND (OUTPUT OR DISPLAY OR READOUT)
L4            23 DUP REM L3 (10 DUPLICATES REMOVED)
```

WEST Search History for Application 13925694

Creation Date: 2015120715:52

Prior Art Searches

Query	DB	Hits	Op.	Plur.	Thes.	Date
sensor same analyte	PGPB, USPT	23163	OR	YES		09-10-2015
(sensor same analyte) same (disable or disabling)	PGPB, USPT	99	OR	YES		09-10-2015
analyte same sensor	PGPB, USPT	23694	OR	YES		12-07-2015
(analyte same sensor) same calibration same (processing or process)	PGPB, USPT	1625	OR	YES		12-07-2015
(analyte same sensor same calibration same (processing or process)) same (output or display or readout) same (storage or storing or store or retrieve or retrieving)	PGPB, USPT	476	OR	YES		12-07-2015
(analyte same sensor same calibration same (processing or process) same (output or display or readout) same (storage or storing or store or retrieve or retrieving)) same (disable or disabling)	PGPB, USPT	3	OR	YES		12-07-2015
(analyte same sensor same calibration same (processing or process) same (output or display or readout) same (storage or storing or store or retrieve or retrieving)) and (disable or disabling)	PGPB, USPT	39	OR	YES		12-07-2015
702/19.ccls. and (analyte same sensor)	PGPB, USPT	394	OR	YES		12-07-2015
702/19.ccls. and (analyte same sensor same calibration same (processing or process))	PGPB, USPT	81	OR	YES		12-07-2015
G06F19/3412.cpc.	PGPB, USPT	1443	OR	YES		12-07-2015
(G06F19/3412.cpc.) and (analyte same sensor)	PGPB, USPT	195	OR	YES		12-07-2015

UNITED STATES PATENT AND TRADEMARK OFFICE

UNITED STATES DEPARTMENT OF COMMERCE
United States Patent and Trademark Office
Address: COMMISSIONER FOR PATENTS
P.O. Box 1450
Alexandria, Virginia 22313-1450
www.uspto.gov

BIB DATA SHEET

CONFIRMATION NO. 8030

SERIAL NUMBER	FILING or 371(c) DATE	CLASS	GROUP ART UNIT	ATTORNEY DOCKET NO.
13/925,694	06/24/2013 RULE	702	1631	A0130.0090.C1

APPLICANTS
Abbott Diabetes Care Inc., Alameda, CA;

INVENTORS
Wesley Scott Harper, Alameda, CA;

**** CONTINUING DATA ***************************
This application is a CON of 12/769,635 04/28/2010 PAT 8483967
which claims benefit of 61/173,600 04/29/2009

**** FOREIGN APPLICATIONS ***************************

**** IF REQUIRED, FOREIGN FILING LICENSE GRANTED ****
07/16/2013

Foreign Priority claimed	☐ Yes ☑ No		STATE OR COUNTRY	SHEETS DRAWINGS	TOTAL CLAIMS	INDEPENDENT CLAIMS
35 USC 119(a-d) conditions met	☐ Yes ☑ No	☐ Met after Allowance				
Verified and Acknowledged	/JERRY LIN/ Examiner's Signature	Initials	CA	7	20	3

ADDRESS
One LLP
4000 MacArthur Blvd.
East Tower, Suite 500
Newport Beach, CA 92660
UNITED STATES

TITLE
Method and System for Providing Real Time Analyte Sensor Calibration with Retrospective Backfill

FILING FEE RECEIVED		
1740	FEES: Authority has been given in Paper No._____ to charge/credit DEPOSIT ACCOUNT No._____ for following:	☐ All Fees ☐ 1.16 Fees (Filing) ☐ 1.17 Fees (Processing Ext. of time) ☐ 1.18 Fees (Issue) ☐ Other _____ ☐ Credit

BIB (Rev. 05/07).

Application Number	Application/Control No.	Applicant(s)/Patent under Reexamination
	13/925,694	HARPER, WESLEY SCOTT

Document Code - DISQ	Internal Document – DO NOT MAIL

TERMINAL DISCLAIMER	☒ APPROVED	☐ DISAPPROVED
Date Filed : 11/9/15	This patent is subject to a Terminal Disclaimer	

Approved/Disapproved by:

Felicia D. Roberts

8,483,967

U.S. Patent and Trademark Office

Docket Nos.: A0130.0090.C1
9368USC1

IN THE UNITED STATES PATENT AND TRADEMARK OFFICE

In re Patent Application of:
Wesley Scott Harper et al.

Application No.: 13/925,694 | Confirmation No.: 8030

Filed: June 24, 2013 | Art Unit: 1631

For: METHOD AND SYSTEM FOR PROVIDING REAL TIME ANALYTE SENSOR CALIBRATION WITH RETROSPECTIVE BACKFILL | Examiner: Jerry Lin

RESPONSE TO FINAL OFFICE ACTION UNDER 37 C.F.R. 1.113

EFS Web
Commissioner for Patents

Dear Madam:

INTRODUCTORY COMMENTS

In response to the Final Office Action dated September 16, 2015, please see the following:

A **Listing of the Claims** beginning on page 2 of this paper; and

Remarks beginning on page 7 of this paper.

LISTING OF THE CLAIMS

This listing of claims replaces all previous versions of the claims in the application.

1-20. (Cancelled)

21. (Previously Presented) A method of monitoring for and responding to the occurrence of an adverse condition associated with an analyte monitoring system that includes an analyte sensor and one or more processors, the method implemented using one or more processors, comprising:

processing sensor data from the analyte sensor of an analyte monitoring system with time corresponding calibration data;

detecting one or more adverse conditions associated with the analyte monitoring system;

disabling output of the sensor data collected during an adverse condition time period in which the adverse condition exists such that a gap in any output sensor data exists;

storing sensor data collected by the analyte sensor during the adverse condition time period;

determining that the one or more detected adverse conditions is no longer present in the analyte monitoring system;

retrieving the stored sensor data collected during the adverse condition time period after determining that the one or more detected adverse conditions is no longer present; and

processing the retrieved sensor data collected during the adverse condition time period such that the gap in the sensor data is at least partially filled.

22. (Previously Presented) The method of claim 21, further including outputting the processed retrieved sensor data.

23. (Previously Presented) The method of claim 21, wherein the one or more detected adverse conditions includes one or more of a sensor instability condition, a calibration failure condition, and a monitoring system failure condition.

24. (Previously Presented) The method of claim 23, wherein the sensor instability condition includes one or more of an early signal attenuation condition of the analyte sensor, an analyte sensor mis-position error, an analyte sensor communication error, a temperature measurement outside a predetermined range, or a combination thereof.

25. (Previously Presented) The method of claim 23, wherein the calibration failure condition includes one or more of an analyte level exceeding a predetermined threshold, a rate of change of analyte level exceeding a predetermined threshold, a signal error associated with the reference data, a data unavailability condition, or a combination thereof.

26. (Previously Presented) The method of claim 21, further including storing the processed sensor data with associated time information based on the analyte level detection time by the analyte sensor.

27. (Previously Presented) The method of claim 21, wherein the analyte sensor comprises a plurality of electrodes including a working electrode, wherein the working electrode comprises an analyte-responsive enzyme and a mediator, wherein at least one of the analyte-responsive enzyme and the mediator is chemically bonded to a polymer disposed on the working electrode, and wherein at least one of the analyte-responsive enzyme and the mediator is crosslinked with the polymer.

28. (Previously Presented) A method of detecting and responding to the occurrence of a condition unsuitable for calibration of an analyte sensor within an analyte monitoring system including one or more processors, the method implemented using the one or more processors and comprising:

detecting a condition unsuitable for calibration of the analyte sensor;

disabling output of information associated with an analyte level monitored using the analyte sensor such that a gap in any output information exists;

storing sensor data collected by the analyte sensor during a time period of disabled output of information;

retrieving one or more parameters associated with a successful calibration of the analyte sensor; and

after the one or more parameters associated with successful calibration has been retrieved, processing the stored sensor data with the one or more parameters associated with the successful calibration such that the gap in the information is at least partially filled.

29. (Previously Presented) The method of claim 28, wherein the condition unsuitable for calibration includes one or more of a failure mode of the analyte sensor, sensor data outside a predetermined acceptable range, a rate of change of sensor data above a predetermined level, a requirement for calibration of the analyte sensor, a temperature measurement outside a predetermined range, or any combination thereof.

30. (Previously Presented) The method of claim 28, further comprising displaying the processed sensor data substantially immediately upon processing.

31. (Previously Presented) The method of claim 28, further comprising displaying the processed sensor data only after waiting a predetermined period of time.

32. (Previously Presented) The method of claim 28, wherein the analyte sensor comprises a plurality of electrodes including a working electrode, wherein the working electrode comprises an analyte-responsive enzyme and a mediator, wherein at least one of the analyte-responsive enzyme and the mediator is chemically bonded to a polymer disposed on the working electrode, and wherein at least one of the analyte-responsive enzyme and the mediator is crosslinked with the polymer.

33. (Previously Presented) An analyte monitoring system that detects and responds to the occurrence of a condition unsuitable for calibration of an analyte sensor, comprising:

an interface configured to receive sensor data from an analyte sensor;

one or more processors; and

a memory device for storing instructions which, when executed by the one or more processors, causes the one or more processors to process stored sensor data, to detect a condition unsuitable for calibration of the analyte sensor for a predetermined time period, to disable displaying of processed sensor data such that a gap in any displayed sensor data exists, to store sensor data collected during a time period of disabled display, to retrieve one or more parameters associated with a successful calibration event, and after the one or more parameters associated with successful calibration have been retrieved, to process the stored sensor data with the one or more parameters associated with the successful calibration such that the gap in the sensor data is at least partially filled.

34. (Previously Presented) The analyte monitoring system of claim 33, further comprising the analyte sensor, wherein the analyte sensor is a glucose sensor.

35. (Previously Presented) The analyte monitoring system of claim 33, wherein the sensor data corresponds to analyte concentration data.

36. (Previously Presented) The analyte monitoring system of claim 33, wherein the memory device further includes instructions to process and display the sensor data substantially in real-time.

37. (Previously Presented) The analyte monitoring system of claim 33, wherein the condition unsuitable for calibration includes one or more of a failure mode of a sensor, sensor data outside a predetermined acceptable range, a rate of change of sensor data above a predetermined level, a requirement for calibration of a sensor, a temperature measurement outside a predetermined range, or any combination thereof.

38. (Previously Presented) The analyte monitoring system of claim 33, wherein the memory device further includes instructions to display the processed sensor data for the time period of disabled display substantially immediately upon processing the sensor data.

39. (Previously Presented) The analyte monitoring system of claim 33, wherein the memory device further includes instructions to display the processed sensor data for the time period of disabled display only after waiting a predetermined period of time.

40. (Previously Presented) The analyte monitoring system of claim 33, further comprising the analyte sensor, wherein the analyte sensor comprises a plurality of electrodes including a working electrode, wherein the working electrode comprises an analyte-responsive enzyme and a mediator, wherein at least one of the analyte-responsive enzyme and the mediator is chemically bonded to a polymer disposed on the working electrode, and wherein at least one of the analyte-responsive enzyme and the mediator is crosslinked with the polymer.

REMARKS

Claims 21-40 remain pending. There is no amendment to the claims.

DOUBLE PATENTING REJECTION

Claims 21-40 were rejected on the ground of nonstatutory double patenting as being unpatentable over claims 1-22 of U.S. Patent No. 8,483,967. A terminal disclaimer over U.S. Patent No. 8,483,967 was previously submitted on June 25, 2015 and a corrected version is being submitted herewith. It is respectfully requested that the rejection be withdrawn.

As there are no other pending rejections, prompt allowance of the present application is respectfully requested.

CONCLUSION

The right is reserved to pursue claims to any subject matter supported by the disclosure of this application in one or more continuation and/or divisional applications at a later time, including the subject matter of any previously pending claims regardless of whether those claims were amended or cancelled herein. This may entail the pursuit of broader claims, narrower claims, and subject matter that was previously relinquished by virtue of argument or amendment.

In view of the foregoing, it is respectfully submitted that all claims are in allowable form. In the event that the Examiner deems that a discussion would be helpful in advancing prosecution, the Examiner is invited to call the undersigned at (949) 444-5970.

Dated: November 9, 2015

Respectfully submitted,

Electronic signature: /Mark Stirrat/
Mark Stirrat
Registration No.: 50,756
ONE LLP
4000 MacArthur Blvd.
East Tower, Suite 500
Newport Beach, CA 92660
Attorney for Applicant

PTO/AIA/26 (04-13)
Approved for use through 04/30/2013. OMB 0651-0031
U.S. Patent and Trademark Office; U.S. DEPARTMENT OF COMMERCE
Under the Paperwork Reduction Act of 1995, no persons are required to respond to a collection of information unless it displays a valid OMB control number.

TERMINAL DISCLAIMER TO OBVIATE A DOUBLE PATENTING REJECTION OVER A "PRIOR" PATENT

Docket Number (Optional)
A0130.0090.C1

In re Application of: Wesley Scott Harper, et al.

Application No.: 13/925,694

Filed: June 24, 2013

For: METHOD AND SYSTEM FOR PROVIDING REAL TIME ANALYTE SENSOR CALIBRATION WITH RETROSPECTIVE BACKFILL

The applicant, Abbott Diabetes Care Inc., owner of 100 percent interest in the instant application hereby disclaims, except as provided below, the terminal part of the statutory term of any patent granted on the instant application which would extend beyond the expiration date of the full statutory term of **prior patent** No. 8,483,967 as the term of said **prior patent** is presently shortened by any terminal disclaimer. The applicant hereby agrees that any patent so granted on the instant application shall be enforceable only for any during such period that it and the **prior patent** are commonly owned. This agreement runs with any patent granted on the instant application and is binding upon the grantee, its successors or assigns.

In making the above disclaimer, the applicant does not disclaim the terminal part of the term of any patent granted on the instant application that would extend to the expiration date of the full statutory term of the **prior patent**, "as the term of said **prior patent** is presently shortened by any terminal disclaimer," in the event that said **prior patent** later:

expires for failure to pay a maintenance fee;
is held unenforceable;
is found invalid by a court of competent jurisdiction;
is statutorily disclaimed in whole or terminally disclaimed under 37 CFR 1.321;
has all claims canceled by a reexamination certificate;
is reissued; or
is in any manner terminated prior to the expiration of its full statutory term as presently shortened by any terminal disclaimer.

Check either box 1 or 2 below, if appropriate.

1. ☐ The undersigned is the applicant. If the applicant is an assignee, the undersigned is authorized to act on behalf of the assignee.

I hereby acknowledge that any willful false statements made are punishable under 18 U.S.C. 1001 by fine or imprisonment of not more than five (5) years, or both.

2. ☑ The undersigned is an attorney or agent of record. Reg. No. 50,756

/Mark Stirrat/	November 9, 2015
Signature	Date

Mark Stirrat
Typed or printed name

Attorney for Applicant	949.502.2870
Title	Telephone Number

☑ Terminal disclaimer fee under 37 CFR 1.20(d) included.

WARNING: Information on this form may become public. Credit card information should not be included on this form. Provide credit card information and authorization on PTO-2038.

This collection of information is required by 37 CFR 1.321. The information is required to obtain or retain a benefit by the public which is to file (and by the USPTO to process) an application. Confidentiality is governed by 35 U.S.C. 122 and 37 CFR 1.11 and 1.14. This collection is estimated to take 12 minutes to complete, including gathering, preparing, and submitting the completed application form to the USPTO. Time will vary depending upon the individual case. Any comments on the amount of time you require to complete this form and/or suggestions for reducing this burden, should be sent to the Chief Information Officer, U.S. Patent and Trademark Office, U.S. Department of Commerce, P.O. Box 1450, Alexandria, VA 22313-1450. DO NOT SEND FEES OR COMPLETED FORMS TO THIS ADDRESS. **SEND TO: Commissioner for Patents, P.O. Box 1450, Alexandria, VA 22313-1450.**

If you need assistance in completing the form, call 1-800-PTO-9199 and select option 2.

Privacy Act Statement

The **Privacy Act of 1974 (P.L. 93-579)** requires that you be given certain information in connection with your submission of the attached form related to a patent application or patent. Accordingly, pursuant to the requirements of the Act, please be advised that: (1) the general authority for the collection of this information is 35 U.S.C. 2(b)(2); (2) furnishing of the information solicited is voluntary; and (3) the principal purpose for which the information is used by the U.S. Patent and Trademark Office is to process and/or examine your submission related to a patent application or patent. If you do not furnish the requested information, the U.S. Patent and Trademark Office may not be able to process and/or examine your submission, which may result in termination of proceedings or abandonment of the application or expiration of the patent.

The information provided by you in this form will be subject to the following routine uses:

1. The information on this form will be treated confidentially to the extent allowed under the Freedom of Information Act (5 U.S.C. 552) and the Privacy Act (5 U.S.C 552a). Records from this system of records may be disclosed to the Department of Justice to determine whether disclosure of these records is required by the Freedom of Information Act.
2. A record from this system of records may be disclosed, as a routine use, in the course of presenting evidence to a court, magistrate, or administrative tribunal, including disclosures to opposing counsel in the course of settlement negotiations.
3. A record in this system of records may be disclosed, as a routine use, to a Member of Congress submitting a request involving an individual, to whom the record pertains, when the individual has requested assistance from the Member with respect to the subject matter of the record.
4. A record in this system of records may be disclosed, as a routine use, to a contractor of the Agency having need for the information in order to perform a contract. Recipients of information shall be required to comply with the requirements of the Privacy Act of 1974, as amended, pursuant to 5 U.S.C. 552a(m).
5. A record related to an International Application filed under the Patent Cooperation Treaty in this system of records may be disclosed, as a routine use, to the International Bureau of the World Intellectual Property Organization, pursuant to the Patent Cooperation Treaty.
6. A record in this system of records may be disclosed, as a routine use, to another federal agency for purposes of National Security review (35 U.S.C. 181) and for review pursuant to the Atomic Energy Act (42 U.S.C. 218(c)).
7. A record from this system of records may be disclosed, as a routine use, to the Administrator, General Services, or his/her designee, during an inspection of records conducted by GSA as part of that agency's responsibility to recommend improvements in records management practices and programs, under authority of 44 U.S.C. 2904 and 2906. Such disclosure shall be made in accordance with the GSA regulations governing inspection of records for this purpose, and any other relevant (*i.e.*, GSA or Commerce) directive. Such disclosure shall not be used to make determinations about individuals.
8. A record from this system of records may be disclosed, as a routine use, to the public after either publication of the application pursuant to 35 U.S.C. 122(b) or issuance of a patent pursuant to 35 U.S.C. 151. Further, a record may be disclosed, subject to the limitations of 37 CFR 1.14, as a routine use, to the public if the record was filed in an application which became abandoned or in which the proceedings were terminated and which application is referenced by either a published application, an application open to public inspection or an issued patent.
9. A record from this system of records may be disclosed, as a routine use, to a Federal, State, or local law enforcement agency, if the USPTO becomes aware of a violation or potential violation of law or regulation.

Electronic Acknowledgement Receipt

EFS ID:	24029509
Application Number:	13925694
International Application Number:	
Confirmation Number:	8030
Title of Invention:	Method and System for Providing Real Time Analyte Sensor Calibration with Retrospective Backfill
First Named Inventor/Applicant Name:	Wesley Scott Harper
Customer Number:	95508
Filer:	Mark Andrew Stirrat/Alana Fredericks
Filer Authorized By:	Mark Andrew Stirrat
Attorney Docket Number:	A0130.0090.C1
Receipt Date:	09-NOV-2015
Filing Date:	24-JUN-2013
Time Stamp:	17:37:48
Application Type:	Utility under 35 USC 111(a)

Payment information:

Submitted with Payment	no

File Listing:

Document Number	Document Description	File Name	File Size(Bytes)/ Message Digest	Multi Part /.zip	Pages (if appl.)
1		9368USC1_A0130_0090_C1_Response_to_FOA_dated_9_16_2015.pdf	93988 f77d2497f10e9e4a12d7b752ba98dd14a19a86a0	yes	7

	Multipart Description/PDF files in .zip description		
	Document Description	**Start**	**End**
	Response After Final Action	1	1
	Claims	2	6
	Applicant Arguments/Remarks Made in an Amendment	7	7

Warnings:

Information:

2	Terminal Disclaimer Filed	9368USC1_A0130_0090_C1_Terminal_Disclaimer_Patent.pdf	146251 9c67a5564d837cc7579abb863cd35c2886779b69	no	2

Warnings:

Information:

Total Files Size (in bytes):	240239

This Acknowledgement Receipt evidences receipt on the noted date by the USPTO of the indicated documents, characterized by the applicant, and including page counts, where applicable. It serves as evidence of receipt similar to a Post Card, as described in MPEP 503.

New Applications Under 35 U.S.C. 111
If a new application is being filed and the application includes the necessary components for a filing date (see 37 CFR 1.53(b)-(d) and MPEP 506), a Filing Receipt (37 CFR 1.54) will be issued in due course and the date shown on this Acknowledgement Receipt will establish the filing date of the application.

National Stage of an International Application under 35 U.S.C. 371
If a timely submission to enter the national stage of an international application is compliant with the conditions of 35 U.S.C. 371 and other applicable requirements a Form PCT/DO/EO/903 indicating acceptance of the application as a national stage submission under 35 U.S.C. 371 will be issued in addition to the Filing Receipt, in due course.

New International Application Filed with the USPTO as a Receiving Office
If a new international application is being filed and the international application includes the necessary components for an international filing date (see PCT Article 11 and MPEP 1810), a Notification of the International Application Number and of the International Filing Date (Form PCT/RO/105) will be issued in due course, subject to prescriptions concerning national security, and the date shown on this Acknowledgement Receipt will establish the international filing date of the application.

PTO/SB/06 (09-11)
Approved for use through 1/31/2014. OMB 0651-0032
U.S. Patent and Trademark Office; U.S. DEPARTMENT OF COMMERCE
Under the Paperwork Reduction Act of 1995, no persons are required to respond to a collection of information unless it displays a valid OMB control number.

PATENT APPLICATION FEE DETERMINATION RECORD

Substitute for Form PTO-875

Application or Docket Number	Filing Date	
13/925,694	06/24/2013	☐ To be Mailed

ENTITY: ☒ LARGE ☐ SMALL ☐ MICRO

APPLICATION AS FILED – PART I

FOR	(Column 1) NUMBER FILED	(Column 2) NUMBER EXTRA	RATE ($)	FEE ($)
☐ BASIC FEE (37 CFR 1.16(a), (b), or (c))	N/A	N/A	N/A	
☐ SEARCH FEE (37 CFR 1.16(k), (i), or (m))	N/A	N/A	N/A	
☐ EXAMINATION FEE (37 CFR 1.16(o), (p), or (q))	N/A	N/A	N/A	
TOTAL CLAIMS (37 CFR 1.16(i))	minus 20 =	*	X $ =	
INDEPENDENT CLAIMS (37 CFR 1.16(h))	minus 3 =	*	X $ =	
☐ APPLICATION SIZE FEE (37 CFR 1.16(s))	If the specification and drawings exceed 100 sheets of paper, the application size fee due is $310 ($155 for small entity) for each additional 50 sheets or fraction thereof. See 35 U.S.C. 41(a)(1)(G) and 37 CFR 1.16(s).			
☐ MULTIPLE DEPENDENT CLAIM PRESENT (37 CFR 1.16(j))				
* If the difference in column 1 is less than zero, enter "0" in column 2.			TOTAL	

APPLICATION AS AMENDED – PART II

AMENDMENT

11/09/2015	(Column 1) CLAIMS REMAINING AFTER AMENDMENT		(Column 2) HIGHEST NUMBER PREVIOUSLY PAID FOR	(Column 3) PRESENT EXTRA	RATE ($)	ADDITIONAL FEE ($)
Total (37 CFR 1.16(i))	* 20	Minus	** 20	=	X $ =	
Independent (37 CFR 1.16(h))	* 3	Minus	***3	=	X $ =	
☐ Application Size Fee (37 CFR 1.16(s))						
☐ FIRST PRESENTATION OF MULTIPLE DEPENDENT CLAIM (37 CFR 1.16(j))						
					TOTAL ADD'L FEE	

AMENDMENT

	(Column 1) CLAIMS REMAINING AFTER AMENDMENT		(Column 2) HIGHEST NUMBER PREVIOUSLY PAID FOR	(Column 3) PRESENT EXTRA	RATE ($)	ADDITIONAL FEE ($)
Total (37 CFR 1.16(i))	*	Minus	**	=	X $ =	
Independent (37 CFR 1.16(h))	*	Minus	***	=	X $ =	
☐ Application Size Fee (37 CFR 1.16(s))						
☐ FIRST PRESENTATION OF MULTIPLE DEPENDENT CLAIM (37 CFR 1.16(j))						
					TOTAL ADD'L FEE	

* If the entry in column 1 is less than the entry in column 2, write "0" in column 3.
** If the "Highest Number Previously Paid For" IN THIS SPACE is less than 20, enter "20".
*** If the "Highest Number Previously Paid For" IN THIS SPACE is less than 3, enter "3".
The "Highest Number Previously Paid For" (Total or Independent) is the highest number found in the appropriate box in column 1.

LIE
/KATRINA . TURNER/

This collection of information is required by 37 CFR 1.16. The information is required to obtain or retain a benefit by the public which is to file (and by the USPTO to process) an application. Confidentiality is governed by 35 U.S.C. 122 and 37 CFR 1.14. This collection is estimated to take 12 minutes to complete, including gathering, preparing, and submitting the completed application form to the USPTO. Time will vary depending upon the individual case. Any comments on the amount of time you require to complete this form and/or suggestions for reducing this burden, should be sent to the Chief Information Officer, U.S. Patent and Trademark Office, U.S. Department of Commerce, P.O. Box 1450, Alexandria, VA 22313-1450. DO NOT SEND FEES OR COMPLETED FORMS TO THIS ADDRESS. **SEND TO: Commissioner for Patents, P.O. Box 1450, Alexandria, VA 22313-1450.**
If you need assistance in completing the form, call 1-800-PTO-9199 and select option 2.

UNITED STATES PATENT AND TRADEMARK OFFICE

UNITED STATES DEPARTMENT OF COMMERCE
United States Patent and Trademark Office
Address: COMMISSIONER FOR PATENTS
P.O. Box 1450
Alexandria, Virginia 22313-1450
www.uspto.gov

APPLICATION NO.	FILING DATE	FIRST NAMED INVENTOR	ATTORNEY DOCKET NO.	CONFIRMATION NO.
13/925,694	06/24/2013	Wesley Scott Harper	A0130.0090.C1	8030

95508 7590 09/16/2015
One LLP
4000 MacArthur Blvd.
East Tower, Suite 500
Newport Beach, CA 92660

EXAMINER
LIN, JERRY

ART UNIT	PAPER NUMBER
1631	

NOTIFICATION DATE	DELIVERY MODE
09/16/2015	ELECTRONIC

Please find below and/or attached an Office communication concerning this application or proceeding.

The time period for reply, if any, is set in the attached communication.

Notice of the Office communication was sent electronically on above-indicated "Notification Date" to the following e-mail address(es):

IPdocketing@onellp.com
onellpdocketing@onellp.com
PAIRgroup@onellp.com

Office Action Summary	Application No. 13/925,694	Applicant(s) HARPER, WESLEY SCOTT	
	Examiner JERRY LIN	Art Unit 1631	AIA (First Inventor to File) Status No

-- The MAILING DATE of this communication appears on the cover sheet with the correspondence address --

Period for Reply

A SHORTENED STATUTORY PERIOD FOR REPLY IS SET TO EXPIRE 3 MONTHS FROM THE MAILING DATE OF THIS COMMUNICATION.

- Extensions of time may be available under the provisions of 37 CFR 1.136(a). In no event, however, may a reply be timely filed after SIX (6) MONTHS from the mailing date of this communication.
- If NO period for reply is specified above, the maximum statutory period will apply and will expire SIX (6) MONTHS from the mailing date of this communication.
- Failure to reply within the set or extended period for reply will, by statute, cause the application to become ABANDONED (35 U.S.C. § 133). Any reply received by the Office later than three months after the mailing date of this communication, even if timely filed, may reduce any earned patent term adjustment. See 37 CFR 1.704(b).

Status

1)☒ Responsive to communication(s) filed on 6/25/2015.

☐ A declaration(s)/affidavit(s) under **37 CFR 1.130(b)** was/were filed on _____.

2a)☒ This action is **FINAL**. 2b)☐ This action is non-final.

3)☐ An election was made by the applicant in response to a restriction requirement set forth during the interview on _____; the restriction requirement and election have been incorporated into this action.

4)☐ Since this application is in condition for allowance except for formal matters, prosecution as to the merits is closed in accordance with the practice under *Ex parte Quayle*, 1935 C.D. 11, 453 O.G. 213.

Disposition of Claims*

5)☒ Claim(s) 21-40 is/are pending in the application.

5a) Of the above claim(s) _____ is/are withdrawn from consideration.

6)☐ Claim(s) _____ is/are allowed.

7)☒ Claim(s) 21-40 is/are rejected.

8)☐ Claim(s) _____ is/are objected to.

9)☐ Claim(s) _____ are subject to restriction and/or election requirement.

* If any claims have been determined allowable, you may be eligible to benefit from the **Patent Prosecution Highway** program at a participating intellectual property office for the corresponding application. For more information, please see http://www.uspto.gov/patents/init_events/pph/index.jsp or send an inquiry to PPHfeedback@uspto.gov.

Application Papers

10)☐ The specification is objected to by the Examiner.

11)☐ The drawing(s) filed on _____ is/are: a)☐ accepted or b)☐ objected to by the Examiner.

Applicant may not request that any objection to the drawing(s) be held in abeyance. See 37 CFR 1.85(a).

Replacement drawing sheet(s) including the correction is required if the drawing(s) is objected to. See 37 CFR 1.121(d).

Priority under 35 U.S.C. § 119

12)☐ Acknowledgment is made of a claim for foreign priority under 35 U.S.C. § 119(a)-(d) or (f).

Certified copies:

a)☐ All b)☐ Some** c)☐ None of the:

1.☐ Certified copies of the priority documents have been received.

2.☐ Certified copies of the priority documents have been received in Application No. _____.

3.☐ Copies of the certified copies of the priority documents have been received in this National Stage application from the International Bureau (PCT Rule 17.2(a)).

** See the attached detailed Office action for a list of the certified copies not received.

Attachment(s)

1) ☐ Notice of References Cited (PTO-892)

2) ☐ Information Disclosure Statement(s) (PTO/SB/08a and/or PTO/SB/08b) Paper No(s)/Mail Date _____.

3) ☐ Interview Summary (PTO-413) Paper No(s)/Mail Date. _____ .

4) ☐ Other: _____.

DETAILED ACTION

1. The present application is being examined under the pre-AIA first to invent provisions.

Status of the Claims

Claims 21-40 are under examination.

Double Patenting

2. The nonstatutory double patenting rejection is based on a judicially created doctrine grounded in public policy (a policy reflected in the statute) so as to prevent the unjustified or improper timewise extension of the "right to exclude" granted by a patent and to prevent possible harassment by multiple assignees. A nonstatutory double patenting rejection is appropriate where the claims at issue are not identical, but at least one examined application claim is not patentably distinct from the reference claim(s) because the examined application claim is either anticipated by, or would have been obvious over, the reference claim(s). See, e.g., *In re Berg*, 140 F.3d 1428, 46 USPQ2d 1226 (Fed. Cir. 1998); *In re Goodman*, 11 F.3d 1046, 29 USPQ2d 2010 (Fed. Cir. 1993); *In re Longi*, 759 F.2d 887, 225 USPQ 645 (Fed. Cir. 1985); *In re Van Ornum*, 686 F.2d 937, 214 USPQ 761 (CCPA 1982); *In re Vogel*, 422 F.2d 438, 164 USPQ 619 (CCPA 1970); and *In re Thorington*, 418 F.2d 528, 163 USPQ 644 (CCPA 1969).

A timely filed terminal disclaimer in compliance with 37 CFR 1.321(c) or 1.321(d) may be used to overcome an actual or provisional rejection based on a nonstatutory double patenting ground provided the reference application or patent either is shown to

be commonly owned with this application, or claims an invention made as a result of activities undertaken within the scope of a joint research agreement. A terminal disclaimer must be signed in compliance with 37 CFR 1.321(b).

The USPTO internet Web site contains terminal disclaimer forms which may be used. Please visit http://www.uspto.gov/forms/. The filing date of the application will determine what form should be used. A web-based eTerminal Disclaimer may be filled out completely online using web-screens. An eTerminal Disclaimer that meets all requirements is auto-processed and approved immediately upon submission. For more information about eTerminal Disclaimers, refer to http://www.uspto.gov/patents/process/file/efs/guidance/eTD-info-I.jsp.

3. Claims 21-40 are rejected on the ground of nonstatutory double patenting as being unpatentable over claims 1-22 of U.S. Patent No. 8,483,967. Although the claims at issue are not identical, they are not patentably distinct from each other because the U.S. Patent requires all the limitations of the instant applications. Thus, the instant application shares the same subject matter as the U.S. Patent and is not patentably distinct.

Terminal Disclaimer

4. The terminal disclaimer filed on June 25, 2015 disclaiming the terminal portion of any patent granted on this application which would extend beyond the expiration date of

U.S. Patent No. 8,483,967 has been reviewed and is NOT accepted. The provided registration number does not match the identified attorney for applicant.

The rejection based on the ground of non-statutory double patenting is maintained.

Withdrawn Rejections

Applicant's arguments and amendments, filed June 25, 2015, with respect to the rejection made under 35 U.S.C. §101 have been fully considered and are persuasive. The recited invention affects a particular machine by disabling the sensor and enabling the sensor again once certain conditions have been met. Thus, the claimed invention has something significantly more than a judicial exception. This rejection has been withdrawn.

Conclusion

THIS ACTION IS MADE FINAL. Applicant is reminded of the extension of time policy as set forth in 37 CFR 1.136(a).

A shortened statutory period for reply to this final action is set to expire THREE MONTHS from the mailing date of this action. In the event a first reply is filed within TWO MONTHS of the mailing date of this final action and the advisory action is not mailed until after the end of the THREE-MONTH shortened statutory period, then the shortened statutory period will expire on the date the advisory action is mailed, and any extension fee pursuant to 37 CFR 1.136(a) will be calculated from the mailing date of

the advisory action. In no event, however, will the statutory period for reply expire later than SIX MONTHS from the mailing date of this final action.

Any inquiry concerning this communication or earlier communications from the examiner should be directed to JERRY LIN whose telephone number is (571)272-2561. The examiner can normally be reached on Mon, Tues, Thurs, and Fri, 5:30 am-4 pm.

If attempts to reach the examiner by telephone are unsuccessful, the examiner's supervisor, Peter Paras can be reached on (571) 272-4517. The fax phone number for the organization where this application or proceeding is assigned is 571-273-8300.

Information regarding the status of an application may be obtained from the Patent Application Information Retrieval (PAIR) system. Status information for published applications may be obtained from either Private PAIR or Public PAIR. Status information for unpublished applications is available through Private PAIR only. For more information about the PAIR system, see http://pair-direct.uspto.gov. Should you have questions on access to the Private PAIR system, contact the Electronic Business Center (EBC) at 866-217-9197 (toll-free). If you would like assistance from a USPTO Customer Service Representative or access to the automated information system, call 800-786-9199 (IN USA OR CANADA) or 571-272-1000.

/JERRY LIN/
Primary Examiner, Art Unit 1631

WEST Search History for Application 13925694

Creation Date: 2015091006:34

Prior Art Searches

Query	DB	Hits	Op.	Plur.	Thes.	Date
sensor same analyte	PGPB, USPT	23163	OR	YES		09-10-2015
(sensor same analyte) same (disable or disabling)	PGPB, USPT	99	OR	YES		09-10-2015

Search Notes	Application/Control No.	Applicant(s)/Patent Under Reexamination
	13925694	HARPER, WESLEY SCOTT
	Examiner	**Art Unit**
	JERRY LIN	1631

CPC- SEARCHED

Symbol	Date	Examiner

CPC COMBINATION SETS - SEARCHED

Symbol	Date	Examiner

US CLASSIFICATION SEARCHED

Class	Subclass	Date	Examiner

SEARCH NOTES

Search Notes	Date	Examiner
See printout	12/20/2014	JL
Inventor Search in palm	12/20/2014	JL
updated	9/10/2015	JL

INTERFERENCE SEARCH

US Class/ CPC Symbol	US Subclass / CPC Group	Date	Examiner

Application Number	Application/Control No.	Applicant(s)/Patent under Reexamination
	13/925,694	HARPER, WESLEY SCOTT

Document Code - DISQ	Internal Document – DO NOT MAIL

TERMINAL DISCLAIMER	☐ APPROVED	☒ DISAPPROVED
Date Filed : 6/25/15	This patent is subject to a Terminal Disclaimer	

Approved/Disapproved by:

ANDRE ROBINSON

[X] TERMINAL DISCLAIMER CONTAINS THE INCORRECT REGISTRATION NUMBER

U.S. Patent and Trademark Office

UNITED STATES PATENT AND TRADEMARK OFFICE

UNITED STATES DEPARTMENT OF COMMERCE
United States Patent and Trademark Office
Address: COMMISSIONER FOR PATENTS
P.O. Box 1450
Alexandria, Virginia 22313-1450
www.uspto.gov

APPLICATION NO.	FILING DATE	FIRST NAMED INVENTOR	ATTORNEY DOCKET NO.	CONFIRMATION NO.
13/925,694	06/24/2013	Wesley Scott Harper	A0130.0090.C1	8030

95508 7590 07/13/2015
One LLP
4000 MacArthur Blvd.
East Tower, Suite 500
Newport Beach, CA 92660

EXAMINER
LIN, JERRY

ART UNIT	PAPER NUMBER
1631	

NOTIFICATION DATE	DELIVERY MODE
07/13/2015	ELECTRONIC

Please find below and/or attached an Office communication concerning this application or proceeding.

The time period for reply, if any, is set in the attached communication.

Notice of the Office communication was sent electronically on above-indicated "Notification Date" to the following e-mail address(es):

jliu@onellp.com
IPdocketing@onellp.com
onellpdocketing@onellp.com

Applicant-Initiated Interview Summary	Application No.	Applicant(s)	
	13/925,694	HARPER, WESLEY SCOTT	
	Examiner	Art Unit	
	JERRY LIN	1631	

All participants (applicant, applicant's representative, PTO personnel):

(1) *Jerry Lin (Examiner)*. (3)_____.

(2) *Mark Stirrat (Applicant's Representative)*. (4)_____.

Date of Interview: *07 July 2015*.

Type: ☒ Telephonic ☐ Video Conference
☐ Personal [copy given to: ☐ applicant ☐ applicant's representative]

Exhibit shown or demonstration conducted: ☐ Yes ☐ No.
If Yes, brief description: _____.

Issues Discussed ☒101 ☐112 ☐102 ☐103 ☐Others
(For each of the checked box(es) above, please describe below the issue and detailed description of the discussion)

Claim(s) discussed: *1*.

Identification of prior art discussed: _____.

Substance of Interview
(For each issue discussed, provide a detailed description and indicate if agreement was reached. Some topics may include: identification or clarification of a reference or a portion thereof, claim interpretation, proposed amendments, arguments of any applied references etc...)

Parties discussed the abstract idea in relation to the sensor. The Examiner indicated that the abstract idea appears to effect the particular machine, i.e. the abstract idea disables the sensor. Thus, since the abstract idea is tied to a particular machine, the claimed invention does have something signficantly more than than the abstract idea. Furthermore, applicant also provided arguments that the claimed invention offers improvements to another technology. The arguments and amendments are sufficient to overcome the 101 rejection..

Applicant recordation instructions: The formal written reply to the last Office action must include the substance of the interview. (See MPEP section 713.04). If a reply to the last Office action has already been filed, applicant is given a non-extendable period of the longer of one month or thirty days from this interview date, or the mailing date of this interview summary form, whichever is later, to file a statement of the substance of the interview

Examiner recordation instructions: Examiners must summarize the substance of any interview of record. A complete and proper recordation of the substance of an interview should include the items listed in MPEP 713.04 for complete and proper recordation including the identification of the general thrust of each argument or issue discussed, a general indication of any other pertinent matters discussed regarding patentability and the general results or outcome of the interview, to include an indication as to whether or not agreement was reached on the issues raised.

☐ Attachment

/JERRY LIN/ Primary Examiner, Art Unit 1631	

Summary of Record of Interview Requirements

Manual of Patent Examining Procedure (MPEP), Section 713.04, Substance of Interview Must be Made of Record
A complete written statement as to the substance of any face-to-face, video conference, or telephone interview with regard to an application must be made of record in the application whether or not an agreement with the examiner was reached at the interview.

Title 37 Code of Federal Regulations (CFR) § 1.133 Interviews
Paragraph (b)

In every instance where reconsideration is requested in view of an interview with an examiner, a complete written statement of the reasons presented at the interview as warranting favorable action must be filed by the applicant. An interview does not remove the necessity for reply to Office action as specified in §§ 1.111, 1.135. (35 U.S.C. 132)

37 CFR §1.2 Business to be transacted in writing.
All business with the Patent or Trademark Office should be transacted in writing. The personal attendance of applicants or their attorneys or agents at the Patent and Trademark Office is unnecessary. The action of the Patent and Trademark Office will be based exclusively on the written record in the Office. No attention will be paid to any alleged oral promise, stipulation, or understanding in relation to which there is disagreement or doubt.

The action of the Patent and Trademark Office cannot be based exclusively on the written record in the Office if that record is itself incomplete through the failure to record the substance of interviews.

It is the responsibility of the applicant or the attorney or agent to make the substance of an interview of record in the application file, unless the examiner indicates he or she will do so. It is the examiner's responsibility to see that such a record is made and to correct material inaccuracies which bear directly on the question of patentability.

Examiners must complete an Interview Summary Form for each interview held where a matter of substance has been discussed during the interview by checking the appropriate boxes and filling in the blanks. Discussions regarding only procedural matters, directed solely to restriction requirements for which interview recordation is otherwise provided for in Section 812.01 of the Manual of Patent Examining Procedure, or pointing out typographical errors or unreadable script in Office actions or the like, are excluded from the interview recordation procedures below. Where the substance of an interview is completely recorded in an Examiners Amendment, no separate Interview Summary Record is required.

The Interview Summary Form shall be given an appropriate Paper No., placed in the right hand portion of the file, and listed on the "Contents" section of the file wrapper. In a personal interview, a duplicate of the Form is given to the applicant (or attorney or agent) at the conclusion of the interview. In the case of a telephone or video-conference interview, the copy is mailed to the applicant's correspondence address either with or prior to the next official communication. If additional correspondence from the examiner is not likely before an allowance or if other circumstances dictate, the Form should be mailed promptly after the interview rather than with the next official communication.

The Form provides for recordation of the following information:
- Application Number (Series Code and Serial Number)
- Name of applicant
- Name of examiner
- Date of interview
- Type of interview (telephonic, video-conference, or personal)
- Name of participant(s) (applicant, attorney or agent, examiner, other PTO personnel, etc.)
- An indication whether or not an exhibit was shown or a demonstration conducted
- An identification of the specific prior art discussed
- An indication whether an agreement was reached and if so, a description of the general nature of the agreement (may be by attachment of a copy of amendments or claims agreed as being allowable). Note: Agreement as to allowability is tentative and does not restrict further action by the examiner to the contrary.
- The signature of the examiner who conducted the interview (if Form is not an attachment to a signed Office action)

It is desirable that the examiner orally remind the applicant of his or her obligation to record the substance of the interview of each case. It should be noted, however, that the Interview Summary Form will not normally be considered a complete and proper recordation of the interview unless it includes, or is supplemented by the applicant or the examiner to include, all of the applicable items required below concerning the substance of the interview.

A complete and proper recordation of the substance of any interview should include at least the following applicable items:
1) A brief description of the nature of any exhibit shown or any demonstration conducted,
2) an identification of the claims discussed,
3) an identification of the specific prior art discussed,
4) an identification of the principal proposed amendments of a substantive nature discussed, unless these are already described on the Interview Summary Form completed by the Examiner,
5) a brief identification of the general thrust of the principal arguments presented to the examiner,
   (The identification of arguments need not be lengthy or elaborate. A verbatim or highly detailed description of the arguments is not required. The identification of the arguments is sufficient if the general nature or thrust of the principal arguments made to the examiner can be understood in the context of the application file. Of course, the applicant may desire to emphasize and fully describe those arguments which he or she feels were or might be persuasive to the examiner.)
6) a general indication of any other pertinent matters discussed, and
7) if appropriate, the general results or outcome of the interview unless already described in the Interview Summary Form completed by the examiner.

Examiners are expected to carefully review the applicant's record of the substance of an interview. If the record is not complete and accurate, the examiner will give the applicant an extendable one month time period to correct the record.

Examiner to Check for Accuracy

If the claims are allowable for other reasons of record, the examiner should send a letter setting forth the examiner's version of the statement attributed to him or her. If the record is complete and accurate, the examiner should place the indication, "Interview Record OK" on the paper recording the substance of the interview along with the date and the examiner's initials.

Docket Nos.: A0130.0090.C1
9368USC1

IN THE UNITED STATES PATENT AND TRADEMARK OFFICE

In re Patent Application of:
Wesley Scott Harper et al.

Application No.: 13/925,694 | Confirmation No.: 8030

Filed: June 24, 2013 | Art Unit: 1631

For: METHOD AND SYSTEM FOR PROVIDING REAL TIME ANALYTE SENSOR CALIBRATION WITH RETROSPECTIVE BACKFILL | Examiner: Jerry Lin

RESPONSE TO NON-FINAL OFFICE ACTION UNDER 37 C.F.R. 1.111

EFS Web
Commissioner for Patents

Dear Madam:

INTRODUCTORY COMMENTS

In response to the Non-Final Office Action dated December 26, 2014, please see the following:

Amendments to the Claims beginning on page 2 of this paper; and

Remarks beginning on page 7 of this paper.

AMENDMENTS TO THE CLAIMS

This listing of claims replaces all previous versions of the claims in the application.

1-20. (Cancelled)

21. (Currently amended) A method of monitoring for and responding to the occurrence of an adverse condition associated with an analyte monitoring system that includes an analyte sensor and one or more processors, the method implemented using one or more processors, comprising:

processing sensor data from [[an]] the analyte sensor of an analyte monitoring system with time corresponding calibration data;

detecting one or more adverse conditions associated with the analyte monitoring system;

disabling output of the sensor data collected during an adverse condition time period in which the adverse condition exists such that a gap in any output sensor data exists;

storing sensor data ~~received from~~ collected by the analyte sensor during the adverse condition time period;

determining that the one or more detected adverse conditions is no longer present in the analyte monitoring system;

retrieving the stored sensor data ~~stored~~ collected during the adverse condition time period ~~when it is determined~~ after determining that the one or more detected adverse conditions is no longer present; and

processing the retrieved sensor data ~~stored~~ collected during the adverse condition time period such that the gap in the sensor data is at least partially filled.

22. (Currently amended) The method of claim 21, further including outputting the processed retrieved sensor data ~~stored during the adverse condition time period~~.

23. (Previously Presented) The method of claim 21, wherein the one or more detected adverse conditions includes one or more of a sensor instability condition, a calibration failure condition, and a monitoring system failure condition.

24. (Previously Presented) The method of claim 23, wherein the sensor instability condition includes one or more of an early signal attenuation condition of the analyte sensor, an analyte sensor mis-position error, an analyte sensor communication error, a temperature measurement outside a predetermined range, or a combination thereof.

25. (Previously Presented) The method of claim 23, wherein the calibration failure condition includes one or more of an analyte level exceeding a predetermined threshold, a rate of change of analyte level exceeding a predetermined threshold, a signal error associated with the reference data, a data unavailability condition, or a combination thereof.

26. (Previously Presented) The method of claim 21, further including storing the processed sensor data with associated time information based on the analyte level detection time by the analyte sensor.

27. (Previously Presented) The method of claim 21, wherein the analyte sensor comprises a plurality of electrodes including a working electrode, wherein the working electrode comprises an analyte-responsive enzyme and a mediator, wherein at least one of the analyte-responsive enzyme and the mediator is chemically bonded to a polymer disposed on the working electrode, and wherein at least one of the analyte-responsive enzyme and the mediator is crosslinked with the polymer.

28. (Currently amended) A method <u>of detecting and responding to the occurrence of a condition unsuitable for calibration of an analyte sensor within an analyte monitoring system including one or more processors, the method</u> implemented using <u>the</u> one or more processors[[,]] <u>and</u> comprising:

detecting a condition unsuitable for calibration of [[an]] <u>the</u> analyte sensor;

disabling output of information associated with an analyte level monitored using the analyte sensor such that a gap in any output information exists;

storing sensor data ~~received from~~ collected by the analyte sensor during a time period of disabled output of information;

retrieving one or more parameters associated with a successful calibration of the analyte sensor; and

after the one or more parameters associated with successful calibration has been retrieved, processing the stored sensor data ~~stored during the time period of disabled output of information~~ with the one or more parameters associated with the successful calibration such that the gap in the information is at least partially filled.

29. (Previously Presented) The method of claim 28, wherein the condition unsuitable for calibration includes one or more of a failure mode of the analyte sensor, sensor data outside a predetermined acceptable range, a rate of change of sensor data above a predetermined level, a requirement for calibration of the analyte sensor, a temperature measurement outside a predetermined range, or any combination thereof.

30. (Currently amended) The method of claim 28, further comprising displaying the processed sensor data ~~wherein the processed sensor data for the time period of disabled information output is displayed~~ substantially immediately upon processing.

31. (Currently amended) The method of claim 28, further comprising displaying ~~wherein~~ the processed sensor data ~~for the time period of disabled information output is displayed~~ only after waiting a predetermined period of time.

32. (Previously Presented) The method of claim 28, wherein the analyte sensor comprises a plurality of electrodes including a working electrode, wherein the working electrode comprises an analyte-responsive enzyme and a mediator, wherein at least one of the analyte-responsive enzyme and the mediator is chemically bonded to a polymer disposed on the working

electrode, and wherein at least one of the analyte-responsive enzyme and the mediator is crosslinked with the polymer.

33. (Currently amended) An ~~apparatus~~ analyte monitoring system that detects and responds to the occurrence of a condition unsuitable for calibration of an analyte sensor, comprising:

an interface configured to receive sensor data from an analyte sensor;

one or more processors; and

a memory device for storing instructions which, when executed by the one or more processors, causes the one or more processors to process stored sensor data, to detect a condition unsuitable for calibration of the analyte sensor for a predetermined time period, to disable displaying of processed sensor data such that a gap in any displayed sensor data exists, to store sensor data ~~received~~ collected during a time period of disabled display, to retrieve one or more parameters associated with a successful calibration event, and after the one or more parameters associated with successful calibration have been retrieved, to process the stored sensor data ~~stored during the time period of disabled display of sensor data~~ with the one or more parameters associated with the successful calibration such that the gap in the sensor data is at least partially filled.

34. (Currently amended) The ~~apparatus~~ analyte monitoring system of claim 33, further comprising the analyte sensor, wherein the analyte sensor is a glucose sensor.

35. (Currently amended) The ~~apparatus~~ analyte monitoring system of claim 33, wherein the sensor data corresponds to analyte concentration data.

36. (Currently amended) The ~~apparatus~~ analyte monitoring system of claim 33, wherein the memory device further includes instructions to process and display the sensor data substantially in real-time.

37. (Currently amended) The ~~apparatus~~ analyte monitoring system of claim 33, wherein the condition unsuitable for calibration includes one or more of a failure mode of a sensor, sensor

data outside a predetermined acceptable range, a rate of change of sensor data above a predetermined level, a requirement for calibration of a sensor, a temperature measurement outside a predetermined range, or any combination thereof.

38. (Currently amended) The ~~apparatus~~ analyte monitoring system of claim 33, wherein the memory device further includes instructions to display the processed sensor data for the time period of disabled display substantially immediately upon processing the sensor data.

39. (Currently amended) The ~~apparatus~~ analyte monitoring system of claim 33, wherein the memory device further includes instructions to display the processed sensor data for the time period of disabled display only after waiting a predetermined period of time.

40. (Currently amended) The ~~apparatus~~ analyte monitoring system of claim 33, further comprising the analyte sensor, wherein the analyte sensor comprises a plurality of electrodes including a working electrode, wherein the working electrode comprises an analyte-responsive enzyme and a mediator, wherein at least one of the analyte-responsive enzyme and the mediator is chemically bonded to a polymer disposed on the working electrode, and wherein at least one of the analyte-responsive enzyme and the mediator is crosslinked with the polymer.

REMARKS

Claims 21-40 remain pending. Claims 21, 22, 28, 30, 31, and 33-40 have been amended. No new matter has been introduced.

REJECTIONS UNDER SECTION 101

Claims 21-40 were rejected under pre-AIA 35 U.S.C. §101 as being directed to a judicial exception without significantly more. The applicants respectfully traverse the rejection.

The two-step test for the presence of patentable subject matter under 35 U.S.C. §101 requires that the claimed invention "must be directed to one of the four statutory categories" and "must not be wholly directed to subject matter encompassing a judicially recognized exception." *Alice Corp. v. CLS Bank Int'l.*, 134 S. Ct. 2347 (2014); see also, *2014 Interim Guidance on Patent Subject Matter Eligibility*, Fed. Register, Vol.79, No 241, at 74621-74625 (hereinafter the "Guidelines"). "[T]he Supreme Court did not create a *per se* excluded category of subject matter, such as software . . ., nor did it impose any special requirement for eligibility of software . . .." Guidelines, at 74629.

A. Step 1 of the Test Is Passed Because the Claims Are to a Process and Machine

Step 1 asks whether the claims are to a process, a machine, manufacture, or a composition of matter. See, e.g., Guidelines at 74621. The claims are either directed to processes or machines and clearly satisfies step 1 of the analysis, and the Office Action appears to agree.

B. Step 2A of the Test Is Passed

Step 2A asks whether the claims are directed to a judicial exception such as a law of nature, a natural phenomenon, or an abstract idea.

1. The Claims Are Not Directed to the Alleged Abstract Idea of Merely "Processing Sensor Data"

The Office Action simply asserts that the claims "are directed to a method and apparatus for processing sensor data" and include an "abstract idea." Office Action, page 2. This falls short of identifying and explaining in the record why the pending claims are directed to an abstract idea.

Care is necessary when scrutinizing claims that allegedly recite an abstract idea "because at some level all inventions embody, use, reflect, rest upon, or apply a law of nature, natural phenomenon, or abstract idea. ***To properly interpret the claim, it is important to understand what the applicant has invented and is seeking to patent***." Guidelines at 74622 (discussing the Part 2A analysis) (emphasis added).

Diabetes mellitus is a chronic disease in which the body does not produce or properly utilize insulin. Sufferers can experience long-term complications including blindness, kidney failure, and nerve damage. Diabetes can also accelerate cardiovascular ailments such as atherosclerosis (hardening of arteries that often leads to stroke) and coronary heart disease.

Existing analyte monitoring systems provide real time analyte level information to a diabetes sufferer using analyte sensors. A problem exists in that, when an adverse condition of the system occurs (such as, for example, condition that is unsuitable for sensor calibration), the analyte level information that is displayed may be incorrect, or a permanent gap in the information may exist, which hinders therapy decisions.

The present application provides solutions for this problem that go far beyond simply "processing sensor data." Claim 28, for example,[1] recites "a method of detecting and responding to the occurrence of a condition unsuitable for calibration of an analyte sensor within an analyte monitoring system." The claim is directed to detecting the condition unsuitable for calibration of the analyte sensor and then disabling the output of information associated with an analyte level monitored using the analyte sensor such that a gap in any output information exists. The claim is further directed to storing the sensor data, collected by the analyte sensor during the time that the output is disabled, and, only after one or more parameters associated with successful calibration is retrieved, processing the stored sensor data with the one or more parameters associated with the

[1] All of the analysis of patent eligibility under section 101 conducted in this and the following sections is done so with respect to independent claim 28, and it is concluded that claim 28 is patent eligible. Independent claims 21 and 33 bear many similarities to claim 28 but also differ from claim 28 in both terminology and scope. However, these differences are not substantial enough to warrant separate analysis of claims 21 and 33 under section 101. It is respectfully submitted that the reasoning set forth with respect to claim 28 is sufficient to illustrate the reasons for patent eligibility of both claims 21 and 33, and reliance upon this reasoning alleviates burdening the Examiner with voluminous, repetitive, and ultimately unnecessary added analysis.

successful calibration such that the gap is at least partially filled. This filling of the gap in data alleviates the hindrance to making therapy decisions.

2. *The Claims Are Directed to a Problem and Solution that Is Necessarily Rooted in the Technology of Analyte Monitoring Systems*

The present claims differ from the other claims found by courts to recite abstract ideas because the present claims do not merely recite the performance of some abstract practice known from before the existence of electronic analyte monitoring systems along with the requirement to perform it on an electronic analyte monitoring system.

The analysis of the present claims is analogous to that in *DDR Holdings, LLC v. Hotels.com et al.*, 113 USPQ2d 1097 (Fed. Cir. 2014), where the Federal Circuit found the claims to be patent eligible.[2] In *DDR*, the problem the claims addressed was that advertising links lure visitor traffic away from the host's webpage such that the host loses control of potential customers. The claimed solution was an internet-centric one generally performed by or within computer networks, and included generating a composite web page with the same look and feel as the host's web page such that the consumer considered the two to be related. The *DDR* claims were held eligible because they were "necessarily rooted in computer technology in order to overcome a problem specifically arising in the realm of computer networks." As such, there was no need for the claims to recite specialized (i.e., non-generic) hardware.

An analogous situation exists here. Like *DDR*, claim 28 does not recite a mathematical algorithm, nor do they recite a fundamental economic or longstanding commercial practice.

Also like *DDR*, the claim addresses a problem and provide a solution particular to a computer-based field. Specifically, the claim addresses a problem arising in the realm of electronic analyte monitoring systems, namely, the occurrence of a condition unsuitable for calibration of an analyte sensor that results in incorrect or missing analyte data being output to a diabetic sufferer, which in turn hinders therapy decisions.

[2] DDR is discussed in the Guidelines at 74632; *DDR* is also addressed in the document entitled "Examples: Abstract Ideas," January 27, 2015, at pp. 4-6, available at http://www.uspto.gov/patent/laws-and-regulations/examination-policy/2014-interim-guidance-subject-matter-eligibility-0.

The claim likewise provides a solution specific to the analyte monitoring system that is "necessarily rooted" in the technology of analyte monitoring systems. As stated above, that solution calls for detecting the condition unsuitable for calibration of the analyte sensor and then disabling the output of information associated with an analyte level monitored using the analyte sensor such that a gap in any output information exists. The claim is further directed to storing the sensor data, collected by the analyte sensor during the time that the output is disabled, and, only after one or more parameters associated with successful calibration is retrieved, processing the stored sensor data with the one or more parameters associated with the successful calibration such that the gap is at least partially filled.

Because claim 28 and all other claims are not directed to an "abstract idea" but rather one "necessarily rooted" in analyte monitoring computer technology, Step 2A is satisfied and no rejection under section 101 is warranted. It is respectfully requested that the rejection to all claims be withdrawn.

C. Step 2B Is Passed because the Claims "As a Whole" Contain "Significantly More" than an Abstract Idea Since They Represent Both an Improvement to the Functioning of an Analyte Monitoring System Itself and to the Technology of Analyte Monitoring

Only if the claims do not pass Step 2A does the analysis proceed to Step 2B, which then asks whether the claims recite additional elements that amount to significantly more than the judicial exception. Guidelines at 74621-74622. As set forth in the preceding section, the claims are not directed to an abstract idea so there is no need to proceed to Step 2B. Assuming *arguendo* that one does proceed, then claims also pass Step 2B.

When claim 28, for example, is "viewed as a whole," it does not merely limit an abstract idea to a computer environment with well-understood, routine, and conventional activities previously known in the industry.[3]

[3] No prior art rejection was set forth against the previously pending claims, implying that those claims contain subject matter considered patentable over what was previously known in the industry.

The claim provides an innovative solution for the problem of prior analyte monitoring systems where the occurrence of a condition that is unsuitable for sensor calibration led to the outputting or display of sensor information that was either incorrect or that contained gaps or missing sections which in turn hindered therapy decisions.

As stated previously, the claim is directed to detecting the condition unsuitable for calibration of the analyte sensor and then disabling the output of information associated with an analyte level monitored using the analyte sensor such that a gap in any output information exists. The claim is further directed to storing the sensor data, collected by the analyte sensor during the time that the output is disabled, and, only after one or more parameters associated with successful calibration is retrieved, processing the stored sensor data with the one or more parameters associated with the successful calibration ***such that the gap is at least partially filled***. This filling of the gap in data alleviates the hindrance to making therapy decisions.

Briefly put, the claim provides a solution that avoids outputting incorrect data by disabling the output when the condition is detected and ***fills the gap*** (at least partially) in any output information.

This qualifies as an improvement to the functioning of the processor-based analyte monitoring system itself (Guidelines at 74624) because faulty or missing data is no longer permanently displayed and thus the system is more robust. This also qualifies as an improvement in another technology (*Id.*), i.e., the field of analyte monitoring for diabetes treatment, since therapy decisions and health management decisions based on incorrect or missing data are no longer hindered. See also, e.g., US Patent Publication No. 2013/0282302, paragraphs 0054-0061, 0062-0063. Both of these bases qualify as adding "significantly more" to the alleged abstract idea.

In view of the foregoing, it is respectfully submitted that the pending claims are eligible under section 101, and it is respectfully requested that the rejections to all claims be withdrawn.

DOUBLE PATENTING

Claims 21-40 are rejected on the ground of nonstatutory double patenting as being unpatentable over claims 1-22 of U.S. Patent No. 8,483,967. A terminal disclaimer over U.S. Patent No. 8,483,967 is submitted herewith. It is respectfully requested that the rejection be withdrawn.

CONCLUSION

Amendments to and/or cancellations of the claims are made without prejudice and solely to clarify the issues before the Examiner and/or to advance prosecution of this application and do not constitute a *de facto* acquiescence to any objection and/or rejection. Accordingly, this response does not concede that previously pending claims are not patentable.

The right is reserved to pursue claims to any subject matter supported by the disclosure of this application in one or more continuation and/or divisional applications at a later time, including the subject matter of any previously pending claims regardless of whether those claims were amended or cancelled herein. This may entail the pursuit of broader claims, narrower claims, and subject matter that was previously relinquished by virtue of argument or amendment.

Any silence with regard to the rejections of and/or objections to certain dependent claims constitutes a recognition that such are moot based on amendments or remarks made with respect to the independent claim from which the dependent claims depend. Such silence does not constitute a *de facto* acquiescence to any objection and/or rejection.

In view of the foregoing, it is respectfully submitted that all claims are in allowable form. In the event that the Examiner deems that a discussion would be helpful in advancing prosecution, the Examiner is invited to call the undersigned at (949) 444-5970.

Dated: June 25, 2015

Respectfully submitted,

Electronic signature: /Mark Stirrat/
Mark Stirrat
Registration No.: 50,756
ONE LLP
4000 MacArthur Blvd.
East Tower, Suite 500
Newport Beach, CA 92660
Attorney for Applicant

PTO/AIA/26 (04-13)
Approved for use through 04/30/2013. OMB 0651-0031
U.S. Patent and Trademark Office; U.S. DEPARTMENT OF COMMERCE
Under the Paperwork Reduction Act of 1995, no persons are required to respond to a collection of information unless it displays a valid OMB control number.

TERMINAL DISCLAIMER TO OBVIATE A DOUBLE PATENTING REJECTION OVER A "PRIOR" PATENT

Docket Number (Optional)
A0130.0090.C1

In re Application of: Wesley Scott Harper, et al.

Application No.: 13/925,694

Filed: June 24, 2013

For: METHOD AND SYSTEM FOR PROVIDING REAL TIME ANALYTE SENSOR CALIBRATION WITH RETROSPECTIVE BACKFILL

The applicant, Abbott Diabetes Care Inc., owner of 100 percent interest in the instant application hereby disclaims, except as provided below, the terminal part of the statutory term of any patent granted on the instant application which would extend beyond the expiration date of the full statutory term of **prior patent** No. 8,483,967 as the term of said **prior patent** is presently shortened by any terminal disclaimer. The applicant hereby agrees that any patent so granted on the instant application shall be enforceable only for any during such period that it and the **prior patent** are commonly owned. This agreement runs with any patent granted on the instant application and is binding upon the grantee, its successors or assigns.

In making the above disclaimer, the applicant does not disclaim the terminal part of the term of any patent granted on the instant application that would extend to the expiration date of the full statutory term of the **prior patent**, "as the term of said **prior patent** is presently shortened by any terminal disclaimer," in the event that said **prior patent** later:

expires for failure to pay a maintenance fee;
is held unenforceable;
is found invalid by a court of competent jurisdiction;
is statutorily disclaimed in whole or terminally disclaimed under 37 CFR 1.321;
has all claims canceled by a reexamination certificate;
is reissued; or
is in any manner terminated prior to the expiration of its full statutory term as presently shortened by any terminal disclaimer.

Check either box 1 or 2 below, if appropriate.

1. ☐ The undersigned is the applicant. If the applicant is an assignee, the undersigned is authorized to act on behalf of the assignee.

I hereby acknowledge that any willful false statements made are punishable under 18 U.S.C. 1001 by fine or imprisonment of not more than five (5) years, or both.

2. ☑ The undersigned is an attorney or agent of record. Reg. No. 38,283

/Mark Stirrat/	June 25, 2015
Signature	Date

Mark Stirrat
Typed or printed name

Attorney for Applicant	949.502.2870
Title	Telephone Number

☑ Terminal disclaimer fee under 37 CFR 1.20(d) included.

WARNING: Information on this form may become public. Credit card information should not be included on this form. Provide credit card information and authorization on PTO-2038.

This collection of information is required by 37 CFR 1.321. The information is required to obtain or retain a benefit by the public which is to file (and by the USPTO to process) an application. Confidentiality is governed by 35 U.S.C. 122 and 37 CFR 1.11 and 1.14. This collection is estimated to take 12 minutes to complete, including gathering, preparing, and submitting the completed application form to the USPTO. Time will vary depending upon the individual case. Any comments on the amount of time you require to complete this form and/or suggestions for reducing this burden, should be sent to the Chief Information Officer, U.S. Patent and Trademark Office, U.S. Department of Commerce, P.O. Box 1450, Alexandria, VA 22313-1450. DO NOT SEND FEES OR COMPLETED FORMS TO THIS ADDRESS. **SEND TO: Commissioner for Patents, P.O. Box 1450, Alexandria, VA 22313-1450.**

If you need assistance in completing the form, call 1-800-PTO-9199 and select option 2.

Privacy Act Statement

The **Privacy Act of 1974 (P.L. 93-579)** requires that you be given certain information in connection with your submission of the attached form related to a patent application or patent. Accordingly, pursuant to the requirements of the Act, please be advised that: (1) the general authority for the collection of this information is 35 U.S.C. 2(b)(2); (2) furnishing of the information solicited is voluntary; and (3) the principal purpose for which the information is used by the U.S. Patent and Trademark Office is to process and/or examine your submission related to a patent application or patent. If you do not furnish the requested information, the U.S. Patent and Trademark Office may not be able to process and/or examine your submission, which may result in termination of proceedings or abandonment of the application or expiration of the patent.

The information provided by you in this form will be subject to the following routine uses:

1. The information on this form will be treated confidentially to the extent allowed under the Freedom of Information Act (5 U.S.C. 552) and the Privacy Act (5 U.S.C 552a). Records from this system of records may be disclosed to the Department of Justice to determine whether disclosure of these records is required by the Freedom of Information Act.
2. A record from this system of records may be disclosed, as a routine use, in the course of presenting evidence to a court, magistrate, or administrative tribunal, including disclosures to opposing counsel in the course of settlement negotiations.
3. A record in this system of records may be disclosed, as a routine use, to a Member of Congress submitting a request involving an individual, to whom the record pertains, when the individual has requested assistance from the Member with respect to the subject matter of the record.
4. A record in this system of records may be disclosed, as a routine use, to a contractor of the Agency having need for the information in order to perform a contract. Recipients of information shall be required to comply with the requirements of the Privacy Act of 1974, as amended, pursuant to 5 U.S.C. 552a(m).
5. A record related to an International Application filed under the Patent Cooperation Treaty in this system of records may be disclosed, as a routine use, to the International Bureau of the World Intellectual Property Organization, pursuant to the Patent Cooperation Treaty.
6. A record in this system of records may be disclosed, as a routine use, to another federal agency for purposes of National Security review (35 U.S.C. 181) and for review pursuant to the Atomic Energy Act (42 U.S.C. 218(c)).
7. A record from this system of records may be disclosed, as a routine use, to the Administrator, General Services, or his/her designee, during an inspection of records conducted by GSA as part of that agency's responsibility to recommend improvements in records management practices and programs, under authority of 44 U.S.C. 2904 and 2906. Such disclosure shall be made in accordance with the GSA regulations governing inspection of records for this purpose, and any other relevant (*i.e.*, GSA or Commerce) directive. Such disclosure shall not be used to make determinations about individuals.
8. A record from this system of records may be disclosed, as a routine use, to the public after either publication of the application pursuant to 35 U.S.C. 122(b) or issuance of a patent pursuant to 35 U.S.C. 151. Further, a record may be disclosed, subject to the limitations of 37 CFR 1.14, as a routine use, to the public if the record was filed in an application which became abandoned or in which the proceedings were terminated and which application is referenced by either a published application, an application open to public inspection or an issued patent.
9. A record from this system of records may be disclosed, as a routine use, to a Federal, State, or local law enforcement agency, if the USPTO becomes aware of a violation or potential violation of law or regulation.

Electronic Patent Application Fee Transmittal

Application Number:	13925694
Filing Date:	24-Jun-2013
Title of Invention:	Method and System for Providing Real Time Analyte Sensor Calibration with Retrospective Backfill
First Named Inventor/Applicant Name:	Wesley Scott Harper
Filer:	Mark Andrew Stirrat/Alana Fredericks
Attorney Docket Number:	A0130.0090.C1

Filed as Large Entity

Filing Fees for Utility under 35 USC 111(a)

Description	Fee Code	Quantity	Amount	Sub-Total in USD($)
Basic Filing:				
Pages:				
Claims:				
Miscellaneous-Filing:				
Petition:				
Patent-Appeals-and-Interference:				
Post-Allowance-and-Post-Issuance:				
Extension-of-Time:				

Description	Fee Code	Quantity	Amount	Sub-Total in USD($)
Extension - 3 months with $0 paid	1253	1	1400	1400
Miscellaneous:				
Statutory or Terminal Disclaimer	1814	1	160	160
		Total in USD ($)		**1560**

Electronic Acknowledgement Receipt

EFS ID:	22744803
Application Number:	13925694
International Application Number:	
Confirmation Number:	8030
Title of Invention:	Method and System for Providing Real Time Analyte Sensor Calibration with Retrospective Backfill
First Named Inventor/Applicant Name:	Wesley Scott Harper
Customer Number:	95508
Filer:	Mark Andrew Stirrat/Alana Fredericks
Filer Authorized By:	Mark Andrew Stirrat
Attorney Docket Number:	A0130.0090.C1
Receipt Date:	25-JUN-2015
Filing Date:	24-JUN-2013
Time Stamp:	16:58:16
Application Type:	Utility under 35 USC 111(a)

Payment information:

Submitted with Payment	yes
Payment Type	Credit Card
Payment was successfully received in RAM	$1560
RAM confirmation Number	7534
Deposit Account	
Authorized User	

The Director of the USPTO is hereby authorized to charge indicated fees and credit any overpayment as follows:

File Listing:

Document Number	Document Description	File Name	File Size(Bytes)/ Message Digest	Multi Part /.zip	Pages (if appl.)
1		9368USC1_A0130_0090_C1_Response_to_NFOA_dated_12_26_2014.pdf	161766 70748365752e7b2d0023f7fd66b51f5fb1924437	yes	12
	Multipart Description/PDF files in .zip description				
	Document Description		**Start**	**End**	
	Amendment/Req. Reconsideration-After Non-Final Reject		1	1	
	Claims		2	6	
	Applicant Arguments/Remarks Made in an Amendment		7	12	
Warnings:					
Information:					
2	Terminal Disclaimer Filed	9368USC1_A0130_0090_C1_Terminal_Disclaimer_Patent.pdf	148718 862f048f6e35a6aa7d2242509056 31ac9c35e3a0	no	2
Warnings:					
Information:					
3	Fee Worksheet (SB06)	fee-info.pdf	32602 242dc4454362a5009936d363193d617b95cbd183	no	2
Warnings:					
Information:					
		Total Files Size (in bytes):	343086		

This Acknowledgement Receipt evidences receipt on the noted date by the USPTO of the indicated documents, characterized by the applicant, and including page counts, where applicable. It serves as evidence of receipt similar to a Post Card, as described in MPEP 503.

New Applications Under 35 U.S.C. 111
If a new application is being filed and the application includes the necessary components for a filing date (see 37 CFR 1.53(b)-(d) and MPEP 506), a Filing Receipt (37 CFR 1.54) will be issued in due course and the date shown on this Acknowledgement Receipt will establish the filing date of the application.

National Stage of an International Application under 35 U.S.C. 371
If a timely submission to enter the national stage of an international application is compliant with the conditions of 35 U.S.C. 371 and other applicable requirements a Form PCT/DO/EO/903 indicating acceptance of the application as a national stage submission under 35 U.S.C. 371 will be issued in addition to the Filing Receipt, in due course.

New International Application Filed with the USPTO as a Receiving Office
If a new international application is being filed and the international application includes the necessary components for an international filing date (see PCT Article 11 and MPEP 1810), a Notification of the International Application Number and of the International Filing Date (Form PCT/RO/105) will be issued in due course, subject to prescriptions concerning national security, and the date shown on this Acknowledgement Receipt will establish the international filing date of the application.

UNITED STATES PATENT AND TRADEMARK OFFICE

UNITED STATES DEPARTMENT OF COMMERCE
United States Patent and Trademark Office
Address: COMMISSIONER FOR PATENTS
P.O. Box 1450
Alexandria, Virginia 22313-1450
www.uspto.gov

APPLICATION NUMBER	FILING OR 371(C) DATE	FIRST NAMED APPLICANT	ATTY. DOCKET NO./TITLE
13/925,694	06/24/2013	Wesley Scott Harper	TS-02-180C01

CONFIRMATION NO. 8030

POWER OF ATTORNEY NOTICE

OC000000074434359

30349
JACKSON & CO., LLP
6114 LA SALLE AVENUE
#507
OAKLAND, CA 94611-2802

Date Mailed: 04/07/2015

NOTICE REGARDING CHANGE OF POWER OF ATTORNEY

This is in response to the Power of Attorney filed 04/01/2015.

- The Power of Attorney to you in this application has been revoked by the applicant. Future correspondence will be mailed to the new address of record(37 CFR 1.33).

/snguyen/

Office of Data Management, Application Assistance Unit (571) 272-4000, or (571) 272-4200, or 1-888-786-0101

UNITED STATES PATENT AND TRADEMARK OFFICE

UNITED STATES DEPARTMENT OF COMMERCE
United States Patent and Trademark Office
Address: COMMISSIONER FOR PATENTS
P.O. Box 1450
Alexandria, Virginia 22313-1450
www.uspto.gov

APPLICATION NUMBER	FILING OR 371(C) DATE	FIRST NAMED APPLICANT	ATTY. DOCKET NO./TITLE
13/925,694	06/24/2013	Wesley Scott Harper	TS-02-180C01

CONFIRMATION NO. 8030

POA ACCEPTANCE LETTER

95508
One LLP
4000 MacArthur Blvd.
East Tower, Suite 500
Newport Beach, CA 92660

OC000000074434380

Date Mailed: 04/07/2015

NOTICE OF ACCEPTANCE OF POWER OF ATTORNEY

This is in response to the Power of Attorney filed 04/01/2015.

The Power of Attorney in this application is accepted. Correspondence in this application will be mailed to the above address as provided by 37 CFR 1.33.

/snguyen/

Office of Data Management, Application Assistance Unit (571) 272-4000, or (571) 272-4200, or 1-888-786-0101

POWER OF ATTORNEY TO PROSECUTE BEFORE THE USPTO
By Assignee

ABBOTT DIABETES CARE INC., assignee of the application(s) for United States Letters Patent identified in the attached statement under 37 CFR 3.73(b), does revoke all powers of attorney previously given and hereby appoints as its attorneys and/or agents, with full power of substitution and revocation, to prosecute this application and transact all business in the United States Patent and Trademark Office, and in countries other than the United States, and to do all things necessary or appropriate therefor before any competent International Authorities in connection with any international patent application(s) corresponding to the above-identified application, all of the registered practitioners identified by Customer Number **95508**.

ONE LLP
4000 MacArthur Blvd.,
East Tower, Suite 500
Newport Beach, CA 92660
(949)-502-2870

The undersigned, also hereby authorizes and empowers all of the registered practitioners associated with Customer Number 95508 to sign statements under 37 CFR 3.73(b) on behalf of the undersigned to establish the undersigned's right to take actions in applications for United States Letters Patent.

Please change the correspondence address for the application identified in the attached statement under 37 CFR 3.73(b) to the address associated with Customer Number 95508.

The individual whose signature is supplied below is authorized to act on behalf of the assignee.

Full Name of Assignee: Abbott Diabetes Care Inc.	
Post Office Address: 1380 South Loop Road, Alameda, CA 94502	
Signature of Declarant or Assignee:	Date: 13-DEC-13
Full Name of Declarant: Susan Tall If Other Than Assignee:	
Title of Declarant: Senior Counsel, Patents & Trademarks	
Address of Declarant: 1380 South Loop Road, Alameda, CA 94502	

Under the Paperwork Reduction Act of1995, no persons arerequired to respond to a collection of information unless it displays a valid OMB control number.

STATEMENT UNDER 37 CFR 3.73(c)

Applicant/Patent Owner: Wesley Scott Harper, et al.

Application No./Patent No.: 13/925,694 Filed/Issue Date: 06/24/2013

Titled: METHOD AND SYSTEM FOR PROVIDING REAL TIME ANALYTE SENSOR CALIBRATION WITH RETROSPECTIVE BACKFILL

ABBOTT DIABETES CARE INC., a CORPORATION

(Name of Assignee) (Type of Assignee, e.g., corporation, partnership, university, government agency, etc.)

states that, for the patent application/patent identified above, it is (choose **one** of options 1, 2, 3 or 4 below):

1. ☑ The assignee of the entire right, title, and interest.

2. ☐ An assignee of less than the entire right, title, and interest (check applicable box):

☐ The extent (by percentage) of its ownership interest is _____%. Additional Statement(s) by the owners holding the balance of the interest must be submitted to account for 100% of the ownership interest.

☐ There are unspecified percentages of ownership. The other parties, including inventors, who together own the entire right, title and interest are:

Additional Statement(s) by the owner(s) holding the balance of the interest must be submitted to account for the entire right, title, and interest.

3. ☐ The assignee of an undivided interest in the entirety (a complete assignment from one of the joint inventors was made). The other parties, including inventors, who together own the entire right, title, and interest are:

Additional Statement(s) by the owner(s) holding the balance of the interest must be submitted to account for the entire right, title, and interest.

4. ☐ The recipient, via a court proceeding or the like (*e.g.*, bankruptcy, probate), of an undivided interest in the entirety (a complete transfer of ownership interest was made). The certified document(s) showing the transfer is attached.

The interest identified in option 1, 2 or 3 above (not option 4) is evidenced by either (choose **one** of options A or B below):

A. ☑ An assignment from the inventor(s) of the patent application/patent identified above. The assignment was recorded in the United States Patent and Trademark Office at Reel 033653, Frame 0684, or for which a copy thereof is attached.

B. ☐ A chain of title from the inventor(s), of the patent application/patent identified above, to the current assignee as follows:

1. From: _____ To: _____

The document was recorded in the United States Patent and Trademark Office at

Reel _____, Frame _____, or for which a copy thereof is attached.

2. From: _____ To: _____

The document was recorded in the United States Patent and Trademark Office at

Reel _____, Frame _____, or for which a copy thereof is attached.

This collection of information is required by37 CFR3.73(b). The information is required toobtain or retain a benefit by the public which is to file (and by the USPTO to process) an application. Confidentialityis governed by35 U.S.C. 122and 37 CFR1.11 and1.14. Thiscollection is estimated to take 12 minutes to complete, including gathering, preparing, and submittingthe completed application form to the USPTO.Time will vary depending upon the individual case. Any comments on the amount of time you require to complete this form and/or suggestions for reducing this burden, should be sent tothe Chief Information Officer, U.S. Patent and Trademark Office, U.S. Department of Commerce, P.O. Box 1450, Alexandria, VA 22313-1450. DO NOT SEND FEES OR COMPLETED FORMS TO THIS ADDRESS.**SEND TO: Commissioner for Patents, P.O. Box 1450, Alexandria, VA 22313-1450**

If you need assistance in completing the form, call 1-800-PTO-9199 and select option 2.

Under the Paperwork Reduction Act of 1995, no persons are required to respond to a collection of information unless it displays a valid OMB control number.

STATEMENT UNDER 37 CFR 3.73(c)

3. From: _____ To: _____

The document was recorded in the United States Patent and Trademark Office at

Reel _____, Frame _____, or for which a copy thereof is attached.

4. From: _____ To: _____

The document was recorded in the United States Patent and Trademark Office at

Reel _____, Frame _____, or for which a copy thereof is attached.

5. From: _____ To: _____

The document was recorded in the United States Patent and Trademark Office at

Reel _____, Frame _____, or for which a copy thereof is attached.

6. From: _____ To: _____

The document was recorded in the United States Patent and Trademark Office at

Reel _____, Frame _____, or for which a copy thereof is attached.

☐ Additional documents in the chain of title are listed on a supplemental sheet(s).

☑ As required by 37 CFR 3.73(c)(1)(i), the documentary evidence of the chain of title from the original owner to the assignee was, or concurrently is being, submitted for recordation pursuant to 37 CFR 3.11.

[NOTE: A separate copy (i.e., a true copy of the original assignment document(s)) must be submitted to Assignment Division in accordance with 37 CFR Part 3, to record the assignment in the records of the USPTO. See MPEP 302.08]

The undersigned (whose title is supplied below) is authorized to act on behalf of the assignee.

/Mark Stirrat/	4/1/2015
Signature	Date
Mark Stirrat	50,756
Printed or Typed Name	Title or Registration Number

Privacy Act Statement

The **Privacy Act of 1974 (P.L. 93-579)** requires that yoube given certain informationin connection with your submission of the attached form related to a patent application or patent. Accordingly, pursuant to the requirements of the Act, pleasebe advised that: (1) the general authority forthe collection of thisinformation is 35 U.S.C. 2(b)(2); (2) furnishing of the information solicited is voluntary; and(3) the principal purpose forwhich the information isused by the U.S. Patent and Trademark Office is to process and/or examine your submission related to a patent applicationor patent. If you do not furnish the requested information,the U.S. Patent and Trademark Office may not be able to process and/or examineyour submission,which may result in termination of proceedings or abandonment of the applicationor expiration of the patent.

The informationprovided by you in this form will be subject to the following routine uses:

1. The information on this form will be treated confidentially to the extent allowed under the Freedom of Information Act (5 U.S.C. 552) and the Privacy Act (5 U.S.C 552a). Records from this system of records may be disclosed to the Department of Justice to determine whether disclosure of these records is required by the Freedom of Information Act.
2. A record from this system of records may be disclosed, as a routine use, in the course of presenting evidence to a court, magistrate, or administrative tribunal, including disclosures to opposing counsel in the course of settlement negotiations.
3. A record in this system of records may be disclosed, as a routine use, to a Member of Congress submitting a request involving an individual, to whom the record pertains, when the individual has requested assistance from the Member with respect to the subject matter of the record.
4. A record in this system of records may be disclosed, as a routine use, to a contractor of the Agency having need for the informationin order to perform a contract. Recipients of information shall be required to comply with the requirements of the Privacy Act of 1974, as amended, pursuant to 5 U.S.C. 552a(m).
5. A record related to an InternationalApplication filed under the Patent Cooperation Treaty in this system of records may be disclosed, as a routine use, to the International Bureau of the World Intellectual Property Organization, pursuant to the Patent Cooperation Treaty.
6. A record in this system of records may be disclosed, as a routine use, to another federal agency for purposes of National Security review (35 U.S.C. 181) and for review pursuant to the Atomic Energy Act (42 U.S.C. 218(c)).
7. A record from this system of records may be disclosed, as a routine use, to the Administrator, General Services, or his/her designee, during an inspection of records conducted by GSA as part of that agency's responsibility to recommend improvements in records management practices and programs, under authority of 44 U.S.C. 2904 and 2906. Such disclosure shall be made in accordance with the GSA regulations governing inspection of records for this purpose, and any other relevant (*i.e.*, GSA or Commerce) directive. Such disclosure shall not be used to make determinations about individuals.
8. A record from this system of records may be disclosed, as a routine use, to the public after either publication of the application pursuant to 35 U.S.C. 122(b) or issuance of a patent pursuant to 35 U.S.C. 151. Further, arecord may be disclosed, subject to the limitations of 37 CFR 1.14, as a routine use, to the public if the record was filed in an application which became abandoned or in which the proceedings were terminated and which application is referenced by either a published application, an application open to public inspection or an issued patent.
9. A record from thissystem of records may be disclosed, as a routine use, to a Federal, State, or local law enforcement agency, if the USPTO becomes aware of a violation or potential violation of law or regulation.

Electronic Acknowledgement Receipt

EFS ID:	21945652
Application Number:	13925694
International Application Number:	
Confirmation Number:	8030
Title of Invention:	Method and System for Providing Real Time Analyte Sensor Calibration with Retrospective Backfill
First Named Inventor/Applicant Name:	Wesley Scott Harper
Customer Number:	30349
Filer:	Mark Andrew Stirrat/Alana Fredericks
Filer Authorized By:	Mark Andrew Stirrat
Attorney Docket Number:	TS-02-180C01
Receipt Date:	01-APR-2015
Filing Date:	24-JUN-2013
Time Stamp:	17:31:07
Application Type:	Utility under 35 USC 111(a)

Payment information:

Submitted with Payment	no

File Listing:

Document Number	Document Description	File Name	File Size(Bytes)/ Message Digest	Multi Part /.zip	Pages (if appl.)
1	Power of Attorney	Abbott_US_POA.pdf	184577 b2416ae7b81987da1da464313f14e566cf82f7be	no	1

Warnings:

Information:

2	Assignee showing of ownership per 37 CFR 3.73	A0130_0090_C1_373Form.pdf	100171 ed103db5e8398c2adcc158027da253e151cc60eb	no	3
Warnings:					
Information:					
		Total Files Size (in bytes):	284748		

This Acknowledgement Receipt evidences receipt on the noted date by the USPTO of the indicated documents, characterized by the applicant, and including page counts, where applicable. It serves as evidence of receipt similar to a Post Card, as described in MPEP 503.

New Applications Under 35 U.S.C. 111
If a new application is being filed and the application includes the necessary components for a filing date (see 37 CFR 1.53(b)-(d) and MPEP 506), a Filing Receipt (37 CFR 1.54) will be issued in due course and the date shown on this Acknowledgement Receipt will establish the filing date of the application.

National Stage of an International Application under 35 U.S.C. 371
If a timely submission to enter the national stage of an international application is compliant with the conditions of 35 U.S.C. 371 and other applicable requirements a Form PCT/DO/EO/903 indicating acceptance of the application as a national stage submission under 35 U.S.C. 371 will be issued in addition to the Filing Receipt, in due course.

New International Application Filed with the USPTO as a Receiving Office
If a new international application is being filed and the international application includes the necessary components for an international filing date (see PCT Article 11 and MPEP 1810), a Notification of the International Application Number and of the International Filing Date (Form PCT/RO/105) will be issued in due course, subject to prescriptions concerning national security, and the date shown on this Acknowledgement Receipt will establish the international filing date of the application.

UNITED STATES PATENT AND TRADEMARK OFFICE

UNITED STATES DEPARTMENT OF COMMERCE
United States Patent and Trademark Office
Address: COMMISSIONER FOR PATENTS
P.O. Box 1450
Alexandria, Virginia 22313-1450
www.uspto.gov

APPLICATION NO.	FILING DATE	FIRST NAMED INVENTOR	ATTORNEY DOCKET NO.	CONFIRMATION NO.
13/925,694	06/24/2013	Wesley Scott Harper	TS-02-180C01	8030

30349 7590 12/26/2014
JACKSON & CO., LLP
6114 LA SALLE AVENUE
#507
OAKLAND, CA 94611-2802

EXAMINER
LIN, JERRY

ART UNIT	PAPER NUMBER
1631	

NOTIFICATION DATE	DELIVERY MODE
12/26/2014	ELECTRONIC

Please find below and/or attached an Office communication concerning this application or proceeding.

The time period for reply, if any, is set in the attached communication.

Notice of the Office communication was sent electronically on above-indicated "Notification Date" to the following e-mail address(es):

uspto@jacolaw.com
docketing@jacolaw.com
mail@jacolaw.com

Office Action Summary	Application No. 13/925,694	Applicant(s) HARPER, WESLEY SCOTT	
	Examiner JERRY LIN	Art Unit 1631	AIA (First Inventor to File) Status No

-- The MAILING DATE of this communication appears on the cover sheet with the correspondence address --

Period for Reply

A SHORTENED STATUTORY PERIOD FOR REPLY IS SET TO EXPIRE 3 MONTHS FROM THE MAILING DATE OF THIS COMMUNICATION.

- Extensions of time may be available under the provisions of 37 CFR 1.136(a). In no event, however, may a reply be timely filed after SIX (6) MONTHS from the mailing date of this communication.
- If NO period for reply is specified above, the maximum statutory period will apply and will expire SIX (6) MONTHS from the mailing date of this communication.
- Failure to reply within the set or extended period for reply will, by statute, cause the application to become ABANDONED (35 U.S.C. § 133). Any reply received by the Office later than three months after the mailing date of this communication, even if timely filed, may reduce any earned patent term adjustment. See 37 CFR 1.704(b).

Status

1)☒ Responsive to communication(s) filed on 4/20/2014.

☐ A declaration(s)/affidavit(s) under **37 CFR 1.130(b)** was/were filed on _____.

2a)☐ This action is **FINAL**. 2b)☒ This action is non-final.

3)☐ An election was made by the applicant in response to a restriction requirement set forth during the interview on _____; the restriction requirement and election have been incorporated into this action.

4)☐ Since this application is in condition for allowance except for formal matters, prosecution as to the merits is closed in accordance with the practice under *Ex parte Quayle*, 1935 C.D. 11, 453 O.G. 213.

Disposition of Claims*

5)☒ Claim(s) 21-40 is/are pending in the application.

5a) Of the above claim(s) _____ is/are withdrawn from consideration.

6)☐ Claim(s) _____ is/are allowed.

7)☒ Claim(s) 21-40 is/are rejected.

8)☐ Claim(s) _____ is/are objected to.

9)☐ Claim(s) _____ are subject to restriction and/or election requirement.

* If any claims have been determined allowable, you may be eligible to benefit from the **Patent Prosecution Highway** program at a participating intellectual property office for the corresponding application. For more information, please see http://www.uspto.gov/patents/init_events/pph/index.jsp or send an inquiry to PPHfeedback@uspto.gov.

Application Papers

10)☐ The specification is objected to by the Examiner.

11)☐ The drawing(s) filed on _____ is/are: a)☐ accepted or b)☐ objected to by the Examiner.

Applicant may not request that any objection to the drawing(s) be held in abeyance. See 37 CFR 1.85(a).

Replacement drawing sheet(s) including the correction is required if the drawing(s) is objected to. See 37 CFR 1.121(d).

Priority under 35 U.S.C. § 119

12)☐ Acknowledgment is made of a claim for foreign priority under 35 U.S.C. § 119(a)-(d) or (f).

Certified copies:

a)☐ All b)☐ Some** c)☐ None of the:

1.☐ Certified copies of the priority documents have been received.

2.☐ Certified copies of the priority documents have been received in Application No. _____.

3.☐ Copies of the certified copies of the priority documents have been received in this National Stage application from the International Bureau (PCT Rule 17.2(a)).

** See the attached detailed Office action for a list of the certified copies not received.

Attachment(s)

1) ☐ Notice of References Cited (PTO-892)

2) ☒ Information Disclosure Statement(s) (PTO/SB/08a and/or PTO/SB/08b) Paper No(s)/Mail Date 10/1/2013.

3) ☐ Interview Summary (PTO-413) Paper No(s)/Mail Date. _____ .

4) ☐ Other: _____.

DETAILED ACTION

1. The present application is being examined under the pre-AIA first to invent provisions.

Status of the Claims

Claims 21-40 are under examination.

Claim Rejections - 35 USC § 101

2. 35 U.S.C. 101 reads as follows:

> Whoever invents or discovers any new and useful process, machine, manufacture, or composition of matter, or any new and useful improvement thereof, may obtain a patent therefor, subject to the conditions and requirements of this title.

Claims 21-40 are rejected under 35 U.S.C. 101 because the claimed invention is directed to a judicial exception (i.e., a law of nature, a natural phenomenon, or an abstract idea) without significantly more.

Claims 21-40 are directed to a method and apparatus for processing sensor data. The claims do not include additional elements that are sufficient to amount to significantly more than the judicial exception. The instant claims recite using a sensor and processor. However, the processors used are generic computers. The sensors are used for data gathering. Data gathering is an extra solution activity that does not does not impart patent eligibility upon an abstract idea. Thus additional claim elements are mere instructions to implement the idea on a computer, and/or a recitation of generic computer structure that serves to perform generic computer functions that are well-

understood, routine, and conventional activities previously known to the pertinent industry.

Double Patenting

The nonstatutory double patenting rejection is based on a judicially created doctrine grounded in public policy (a policy reflected in the statute) so as to prevent the unjustified or improper timewise extension of the "right to exclude" granted by a patent and to prevent possible harassment by multiple assignees. A nonstatutory double patenting rejection is appropriate where the claims at issue are not identical, but at least one examined application claim is not patentably distinct from the reference claim(s) because the examined application claim is either anticipated by, or would have been obvious over, the reference claim(s). See, e.g., *In re Berg*, 140 F.3d 1428, 46 USPQ2d 1226 (Fed. Cir. 1998); *In re Goodman*, 11 F.3d 1046, 29 USPQ2d 2010 (Fed. Cir. 1993); *In re Longi*, 759 F.2d 887, 225 USPQ 645 (Fed. Cir. 1985); *In re Van Ornum*, 686 F.2d 937, 214 USPQ 761 (CCPA 1982); *In re Vogel*, 422 F.2d 438, 164 USPQ 619 (CCPA 1970); and *In re Thorington*, 418 F.2d 528, 163 USPQ 644 (CCPA 1969).

A timely filed terminal disclaimer in compliance with 37 CFR 1.321(c) or 1.321(d) may be used to overcome an actual or provisional rejection based on a nonstatutory double patenting ground provided the reference application or patent either is shown to be commonly owned with this application, or claims an invention made as a result of activities undertaken within the scope of a joint research agreement. A terminal disclaimer must be signed in compliance with 37 CFR 1.321(b).

The USPTO internet Web site contains terminal disclaimer forms which may be used. Please visit http://www.uspto.gov/forms/. The filing date of the application will determine what form should be used. A web-based eTerminal Disclaimer may be filled out completely online using web-screens. An eTerminal Disclaimer that meets all requirements is auto-processed and approved immediately upon submission. For more information about eTerminal Disclaimers, refer to http://www.uspto.gov/patents/process/file/efs/guidance/eTD-info-I.jsp.

3. Claims 21-40 are rejected on the ground of nonstatutory double patenting as being unpatentable over claims 1-22 of U.S. Patent No. 8,483,967. Although the claims at issue are not identical, they are not patentably distinct from each other because the U.S. Patent requires all the limitations of the instant applications. Thus, the instant application shares the same subject matter as the U.S. Patent and is not patentably distinct.

Contact Information

Any inquiry concerning this communication or earlier communications from the examiner should be directed to JERRY LIN whose telephone number is (571)272-2561. The examiner can normally be reached on Tuesday - Friday, 5 am-3:30 pm.

If attempts to reach the examiner by telephone are unsuccessful, the examiner's supervisor, Marjorie A. Moran can be reached on (571) 272-0720. The fax phone

number for the organization where this application or proceeding is assigned is 571-273-8300.

Information regarding the status of an application may be obtained from the Patent Application Information Retrieval (PAIR) system. Status information for published applications may be obtained from either Private PAIR or Public PAIR. Status information for unpublished applications is available through Private PAIR only. For more information about the PAIR system, see http://pair-direct.uspto.gov. Should you have questions on access to the Private PAIR system, contact the Electronic Business Center (EBC) at 866-217-9197 (toll-free). If you would like assistance from a USPTO Customer Service Representative or access to the automated information system, call 800-786-9199 (IN USA OR CANADA) or 571-272-1000.

/JERRY LIN/
Primary Examiner, Art Unit 1631

PTO/SB/08 (09-08)
Approved for use through 10/31/2008. OMB 0651-0031
U.S. Patent and Trademark Office; U.S. DEPARTMENT OF COMMERCE
Under the Paperwork Reduction Act of 1995, no persons are required to respond to a collection of information unless it contains a valid OMB control number..

Substitute for form 1449/PTO

INFORMATION DISCLOSURE STATEMENT BY APPLICANT

(Use as many sheets as necessary)

	Complete if Known
Application Number	13/925,694
Filing Date	June 24, 2013
First Named Inventor	Wesley Scott Harper, et al.
Art Unit	1631
Examiner Name	Not yet assigned

Sheet	1	of	26	Attorney Docket No: TS-02-180C01

US PATENT DOCUMENTS

Examiner Initials*	Cite No.	Document Number Number-Kind Code	Publication Date MM-DD-YYYY	Name of Patentee or Applicant of Cited Document	Pages, Columns, Lines, Where Relevant Passages or Relevant Figures Appear
		US-3,581,062	05-21-1971	Aston	
		US-3,926,760	12-16-1975	Allen, et al.	
		US-3,949,388	04-06-1976	Fuller	
		US-4,036,749	07-19-1977	Anderson	
		US-4,055,175	10-25-1977	Clemens, et al.	
		US-4,129,128	12-12-1978	McFarlane	
		US-4,245,634	01-20-1981	Albisser, et al.	
		US-4,327,725	05-04-1982	Cortese, et al.	
		US-4,344,438	08-17-1982	Schultz	
		US-4,349,728	09-14-1982	Phillips, et al.	
		US-4,373,527	02-15-1983	Fischell	
		US-4,392,849	07-12-1983	Petre, et al.	
		US-4,425,920	01-17-1984	Bourland, et al.	
		US-4,462,048	07-24-1984	Ross	
		US-4,478,976	10-23-1984	Goertz, et al.	
		US-4,494,950	01-22-1985	Fischell	
		US-4,509,531	04-09-1985	Ward	
		US-4,527,240	07-02-1985	Kvitash	
		US-4,538,616	09-03-1985	Rogoff	
		US-4,619,793	10-28-1986	Lee	
		US-4,671,288	06-09-1987	Gough	
		US-4,703,756	11-03-1987	Gough, et al.	
		US-4,731,726	03-15-1988	Allen, III	
		US-4,749,985	06-07-1988	Corsberg	
		US-4,757,022	07-12-1988	Shults, et al.	
		US-4,777,953	10-18-1988	Ash, et al.	
		US-4,779,618	10-25-1988	Mund, et al.	
		US-4,854,322	08-08-1989	Ash, et al.	
		US-4,871,351	10-03-1989	Feingold	
		US-4,890,620	01-02-1990	Gough	
		US-4,925,268	05-15-1990	Iyer, et al.	
		US-4,953,552	09-04-1990	DeMarzo	
		US-4,986,271	01-22-1991	Wilkins	
		US-4,995,402	02-26-1991	Smith, et al.	
		US-5,000,180	03-19-1991	Kuypers, et al.	
		US-5,002,054	03-26-1991	Ash, et al.	
		US-5,019,974	05-28-1991	Beckers	
		US-5,050,612	09-24-1991	Matsumura	
		US-5,055,171	10-08-1991	Peck	
		US-5,068,536	11-26-1991	Rosenthal	

EXAMINER **DATE CONSIDERED**

Substitute Disclosure Statement Form (PTO-1449)
* EXAMINER: Initial if reference considered, whether or not citation is in conformance with MPEP 609. Draw line through citation if not in conformance and not considered. Include copy of this form with next communication to applicant.1 Applicant's unique citation designation number (optional) 2 Applicant is to place a check mark here if English language Translation is attached

ALL REFERENCES CONSIDERED EXCEPT WHERE LINED THROUGH. /J.L./

PTO/SB/08 (09-08)
Approved for use through 10/31/2008. OMB 0651-0031
U.S. Patent and Trademark Office; U.S. DEPARTMENT OF COMMERCE
Under the Paperwork Reduction Act of 1995, no persons are required to respond to a collection of information unless it contains a valid OMB control number..

Substitute for form 1449/PTO

INFORMATION DISCLOSURE STATEMENT BY APPLICANT

(Use as many sheets as necessary)

	Complete if Known
Application Number	13/925,694
Filing Date	June 24, 2013
First Named Inventor	Wesley Scott Harper, et al.
Art Unit	1631
Examiner Name	Not yet assigned

Sheet	2	of	26	Attorney Docket No: TS-02-180C01

US PATENT DOCUMENTS

Examiner Initials*	Cite No.	Document Number Number-Kind Code	Publication Date MM-DD-YYYY	Name of Patentee or Applicant of Cited Document	Pages, Columns, Lines, Where Relevant Passages or Relevant Figures Appear
		US-5,077,476	12-31-1991	Rosenthal	
		US-5,082,550	01-21-1992	Rishpon, et al.	
		US-5,106,365	04-21-1992	Hernandez	
		US-5,122,925	06-16-1992	Inpyn	
		US-5,165,407	11-24-1992	Wilson, et al.	
		US-5,202,261	04-13-1993	Musho, et al.	
		US-5,210,778	05-11-1993	Massart	
		US-5,231,988	08-03-1993	Wernicke, et al.	
		US-5,246,867	09-21-1993	Lakowicz, et al.	
		US-5,262,035	11-16-1993	Gregg, et al.	
		US-5,262,305	11-16-1993	Heller, et al.	
		US-5,264,104	11-23-1993	Gregg, et al.	
		US-5,264,105	11-23-1993	Gregg, et al.	
		US-5,279,294	01-18-1994	Anderson, et al.	
		US-5,285,792	02-15-1994	Sjoquist, et al.	
		US-5,293,877	03-15-1994	O'Hara, et al.	
		US-5,299,571	04-05-1994	Mastrototaro	
		US-5,320,725	06-14-1994	Gregg, et al.	
		US-5,322,063	06-21-1994	Allen, et al.	
		US-5,328,460	07-12-1994	Lord, et al.	
		US-5,340,722	08-23-1994	Wolfbeis, et al.	
		US-5,342,789	08-30-1994	Chick, et al.	
		US-5,356,786	10-18-1994	Heller, et al.	
		US-5,360,404	11-01-1994	Novacek, et al.	
		US-5,372,427	12-13-1994	Padovani, et al.	
		US-5,379,238	01-03-1995	Stark	
		US-5,384,547	01-24-1995	Lynk, et al.	
		US-5,390,671	02-21-1995	Lord, et al.	
		US-5,391,250	02-21-1995	Cheney, II, et al.	
		US-5,408,999	04-25-1995	Singh, et al.	
		US-5,411,647	05-02-1995	Johnson, et al.	
		US-5,425,868	06-20-1995	Pedersen	
		US-5,429,602	07-04-1995	Hauser	
		US-5,431,160	07-11-1995	Wilkins	
		US-5,431,921	07-11-1995	Thombre	
		US-5,462,645	10-31-1995	Albery, et al.	
		US-5,497,772	03-12-1996	Schulman, et al.	
		US-5,507,288	04-16-1996	Bocker, et al.	
		US-5,509,410	04-23-1996	Hill, et al.	
		US-5,514,718	05-07-1996	Lewis, et al.	

EXAMINER **DATE CONSIDERED**

Substitute Disclosure Statement Form (PTO-1449)
* EXAMINER: Initial if reference considered, whether or not citation is in conformance with MPEP 609. Draw line through citation if not in conformance and not considered. Include copy of this form with next communication to applicant.1 Applicant's unique citation designation number (optional) 2 Applicant is to place a check mark here if English language Translation is attached

ALL REFERENCES CONSIDERED EXCEPT WHERE LINED THROUGH. /J.L./

PTO/SB/08 (09-08)
Approved for use through 10/31/2008. OMB 0651-0031
U.S. Patent and Trademark Office; U.S. DEPARTMENT OF COMMERCE
Under the Paperwork Reduction Act of 1995, no persons are required to respond to a collection of information unless it contains a valid OMB control number..

Substitute for form 1449/PTO

INFORMATION DISCLOSURE STATEMENT BY APPLICANT

(Use as many sheets as necessary)

	Complete if Known
Application Number	13/925,694
Filing Date	June 24, 2013
First Named Inventor	Wesley Scott Harper, et al.
Art Unit	1631
Examiner Name	Not yet assigned

Sheet	3	of	26	Attorney Docket No: TS-02-180C01

US PATENT DOCUMENTS

Examiner Initials*	Cite No.	Document Number Number-Kind Code	Publication Date MM-DD-YYYY	Name of Patentee or Applicant of Cited Document	Pages, Columns, Lines, Where Relevant Passages or Relevant Figures Appear
		US-5,531,878	07-02-1996	Vadgama, et al.	
		US-5,552,997	09-03-1996	Massart	
		US-5,568,400	10-22-1996	Stark, et al.	
		US-5,568,806	10-29-1996	Cheney, II, et al.	
		US-5,569,186	10-29-1996	Lord, et al.	
		US-5,582,184	12-10-1996	Erickson, et al.	
		US-5,586,553	12-24-1996	Halili, et al.	
		US-5,593,852	01-14-1997	Heller, et al.	
		US-5,609,575	03-11-1997	Larson, et al.	
		US-5,628,310	05-13-1997	Rao, et al.	
		US-5,653,239	08-05-1997	Pompei, et al.	
		US-5,660,163	08-26-1997	Schulman, et al.	
		US-5,665,222	09-09-1997	Heller, et al.	
		US-5,711,001	01-20-1998	Bussan, et al.	
		US-5,711,861	01-27-1998	Ward, et al.	
		US-5,733,259	03-31-1998	Valcke, et al.	
		US-5,772,586	06-30-1998	Heinonen, et al.	
		US-5,791,344	08-11-1998	Schulman, et al.	
		US-5,899,855	05-04-1999	Brown	
		US-5,925,021	07-20-1999	Castellano, et al.	
		US-5,935,224	08-10-1999	Svancarek, et al.	
		US-5,942,979	08-24-1999	Luppino	
		US-5,957,854	09-28-1999	Besson, et al.	
		US-5,964,993	10-12-1999	Blubaugh, Jr., et al.	
		US-5,965,380	10-12-1999	Heller, et al.	
		US-5,971,922	10-26-1999	Arita, et al.	
		US-5,995,860	11-30-1999	Sun, et al.	
		US-6,001,067	12-14-1999	Shults, et al.	
		US-6,024,699	02-15-2000	Surwit, et al.	
		US-6,049,727	04-11-2000	Crothall	
		US-6,083,710	07-04-2000	Heller, et al.	
		US-6,088,608	07-11-2000	Schulman, et al.	
		US-6,091,976	07-18-2000	Pfeiffer, et al.	
		US-6,093,172	07-25-2000	Funderburk, et al.	
		US-6,103,033	08-15-2000	Say, et al.	
		US-6,117,290	09-12-2000	Say, et al.	
		US-6,119,028	09-12-2000	Schulman, et al.	
		US-6,120,676	09-19-2000	Heller, et al.	
		US-6,121,009	09-19-2000	Heller, et al.	
		US-6,121,611	09-19-2000	Lindsay, et al.	

EXAMINER **DATE CONSIDERED**

Substitute Disclosure Statement Form (PTO-1449)
* EXAMINER: Initial if reference considered, whether or not citation is in conformance with MPEP 609. Draw line through citation if not in conformance and not considered. Include copy of this form with next communication to applicant.1 Applicant's unique citation designation number (optional) 2 Applicant is to place a check mark here if English language Translation is attached

ALL REFERENCES CONSIDERED EXCEPT WHERE LINED THROUGH. /J.L./

PTO/SB/08 (09-08)
Approved for use through 10/31/2008. OMB 0651-0031
U.S. Patent and Trademark Office; U.S. DEPARTMENT OF COMMERCE
Under the Paperwork Reduction Act of 1995, no persons are required to respond to a collection of information unless it contains a valid OMB control number..

Substitute for form 1449/PTO

INFORMATION DISCLOSURE STATEMENT BY APPLICANT

(Use as many sheets as necessary)

	Complete if Known
Application Number	13/925,694
Filing Date	June 24, 2013
First Named Inventor	Wesley Scott Harper, et al.
Art Unit	1631
Examiner Name	Not yet assigned

Sheet	4	of	26	Attorney Docket No: TS-02-180C01

US PATENT DOCUMENTS

Examiner Initials*	Cite No.	Document Number Number-Kind Code	Publication Date MM-DD-YYYY	Name of Patentee or Applicant of Cited Document	Pages, Columns, Lines, Where Relevant Passages or Relevant Figures Appear
		US-6,122,351	09-19-2000	Schlueter, Jr., et al.	
		US-6,134,461	10-17-2000	Say, et al.	
		US-6,143,164	11-07-2000	Heller, et al.	
		US-6,162,611	12-19-2000	Heller, et al.	
		US-6,175,752	01-16-2001	Say, et al.	
		US-6,200,265	03-13-2001	Walsh, et al.	
		US-6,212,416	04-03-2001	Ward, et al.	
		US-6,219,574	04-17-2001	Cormier, et al.	
		US-6,233,471	05-15-2001	Berner, et al.	
		US-6,248,067	06-19-2001	Causey, III, et al.	
		US-6,275,717	08-14-2001	Gross, et al.	
		US-6,284,478	09-04-2001	Heller, et al.	
		US-6,293,925	09-25-2001	Safabash, et al.	
		US-6,295,506	09-25-2001	Heinonen, et al.	
		US-6,306,104	10-23-2001	Cunningham, et al.	
		US-6,309,884	10-30-2001	Cooper, et al.	
		US-6,329,161	12-11-2001	Heller, et al.	
		US-6,360,888	03-26-2002	McIvor, et al.	
		US-6,366,794	04-02-2002	Moussy, et al.	
		US-6,377,828	04-23-2002	Chaiken, et al.	
		US-6,379,301	04-30-2002	Worthington, et al.	
		US-6,387,048	05-14-2002	Schulman, et al.	
		US-6,424,847	07-23-2002	Mastrototaro, et al.	
		US-6,427,088	07-30-2002	Bowman IV, et al.	
		US-6,440,068	08-27-2002	Brown, et al.	
		US-6,478,736	11-12-2002	Mault	
		US-6,484,046	11-19-2002	Say, et al.	
		US-6,514,718	02-04-2003	Heller, et al.	
		US-6,544,212	04-08-2003	Galley, et al.	
		US-6,546,268	04-08-2003	Ishikawa, et al.	
		US-6,551,494	04-22-2003	Heller, et al.	
		US-6,558,321	05-06-2003	Burd, et al.	
		US-6,558,351	05-06-2003	Steil, et al.	
		US-6,560,471	05-06-2003	Heller, et al.	
		US-6,561,978	05-13-2003	Conn, et al.	
		US-6,562,001	05-13-2003	Lebel, et al.	
		US-6,564,105	05-13-2003	Starkweather, et al.	
		US-6,565,509	05-20-2003	Say, et al.	
		US-6,571,128	05-27-2003	Lebel, et al.	
		US-6,572,545	06-03-2003	Knobbe, et al.	

EXAMINER **DATE CONSIDERED**

Substitute Disclosure Statement Form (PTO-1449)
* EXAMINER: Initial if reference considered, whether or not citation is in conformance with MPEP 609. Draw line through citation if not in conformance and not considered. Include copy of this form with next communication to applicant.1 Applicant's unique citation designation number (optional) 2 Applicant is to place a check mark here if English language Translation is attached

ALL REFERENCES CONSIDERED EXCEPT WHERE LINED THROUGH. /J.L./

PTO/SB/08 (09-08)
Approved for use through 10/31/2008. OMB 0651-0031
U.S. Patent and Trademark Office; U.S. DEPARTMENT OF COMMERCE
Under the Paperwork Reduction Act of 1995, no persons are required to respond to a collection of information unless it contains a valid OMB control number..

Substitute for form 1449/PTO

INFORMATION DISCLOSURE STATEMENT BY APPLICANT

(Use as many sheets as necessary)

	Complete if Known
Application Number	13/925,694
Filing Date	June 24, 2013
First Named Inventor	Wesley Scott Harper, et al.
Art Unit	1631
Examiner Name	Not yet assigned

Sheet	5	of	26	Attorney Docket No: TS-02-180C01

US PATENT DOCUMENTS

Examiner Initials*	Cite No.	Document Number Number-Kind Code	Publication Date MM-DD-YYYY	Name of Patentee or Applicant of Cited Document	Pages, Columns, Lines, Where Relevant Passages or Relevant Figures Appear
		US-6,576,101	06-10-2003	Heller, et al.	
		US-6,577,899	06-10-2003	Lebel, et al.	
		US-6,579,690	06-17-2003	Bonnecaze, et al.	
		US-6,585,644	07-01-2003	Lebel, et al.	
		US-6,591,125	07-08-2003	Buse, et al.	
		US-6,595,919	07-22-2003	Berner, et al.	
		US-6,605,200	08-12-2003	Mao, et al.	
		US-6,605,201	08-12-2003	Mao, et al.	
		US-6,607,509	08-19-2003	Bobroff, et al.	
		US-6,610,012	08-26-2003	Mault	
		US-6,633,772	10-14-2003	Ford, et al.	
		US-6,635,014	10-21-2003	Starkweather, et al.	
		US-6,648,821	11-18-2003	Lebel, et al.	
		US-6,654,625	11-25-2003	Say, et al.	
		US-6,659,948	12-09-2003	Lebel, et al.	
		US-6,668,196	12-23-2003	Villegas, et al.	
		US-6,675,030	01-06-2004	Ciuczak, et al.	
		US-6,676,816	01-13-2004	Mao, et al.	
		US-6,687,546	02-03-2004	Lebel, et al.	
		US-6,689,056	02-10-2004	Kilcoyne, et al.	
		US-6,694,191	02-17-2004	Starkweather, et al.	
		US-6,695,860	02-24-2004	Ward, et al.	
		US-6,698,269	03-02-2004	Baber, et al.	
		US-6,702,857	03-09-2004	Brauker, et al.	
		US-6,733,446	05-11-2004	Lebel, et al.	
		US-6,740,075	05-25-2004	Lebel, et al.	
		US-6,741,877	05-25-2004	Shults, et al.	
		US-6,746,582	06-08-2004	Heller, et al.	
		US-6,758,810	07-06-2004	Lebel, et al.	
		US-6,770,030	08-03-2004	Schaupp, et al.	
		US-6,790,178	09-14-2004	Mault, et al.	
		US-6,809,653	10-26-2004	Mann, et al.	
		US-6,810,290	10-26-2004	Lebel, et al.	
		US-6,811,533	11-02-2004	Lebel, et al.	
		US-6,811,534	11-02-2004	Bowman IV, et al.	
		US-6,813,519	11-02-2004	Lebel, et al.	
		US-6,850,790	02-01-2005	Berner, et al.	
		US-6,862,465	03-01-2005	Shults, et al.	
		US-6,865,407	03-08-2005	Kimball, et al	
		US-6,873,268	03-29-2005	Lebel, et al.	

EXAMINER **DATE CONSIDERED**

Substitute Disclosure Statement Form (PTO-1449)
* EXAMINER: Initial if reference considered, whether or not citation is in conformance with MPEP 609. Draw line through citation if not in conformance and not considered. Include copy of this form with next communication to applicant.1 Applicant's unique citation designation number (optional) 2 Applicant is to place a check mark here if English language Translation is attached

ALL REFERENCES CONSIDERED EXCEPT WHERE LINED THROUGH. /J.L./

PTO/SB/08 (09-08)
Approved for use through 10/31/2008. OMB 0651-0031
U.S. Patent and Trademark Office; U.S. DEPARTMENT OF COMMERCE
Under the Paperwork Reduction Act of 1995, no persons are required to respond to a collection of information unless it contains a valid OMB control number..

Substitute for form 1449/PTO

INFORMATION DISCLOSURE STATEMENT BY APPLICANT

(Use as many sheets as necessary)

	Complete if Known
Application Number	13/925,694
Filing Date	June 24, 2013
First Named Inventor	Wesley Scott Harper, et al.
Art Unit	1631
Examiner Name	Not yet assigned

Sheet	6	of	26	Attorney Docket No: TS-02-180C01

US PATENT DOCUMENTS

Examiner Initials*	Cite No.	Document Number Number-Kind Code	Publication Date MM-DD-YYYY	Name of Patentee or Applicant of Cited Document	Pages, Columns, Lines, Where Relevant Passages or Relevant Figures Appear
		US-6,881,551	04-19-2005	Heller, et al.	
		US-6,882,940	04-19-2005	Potts, et al.	
		US-6,885,883	04-26-2005	Parris, et al.	
		US-6,892,085	05-10-2005	McIvor, et al.	
		US-6,895,263	05-17-2005	Shin, et al.	
		US-6,895,265	05-17-2005	Silver	
		US-6,931,327	08-16-2005	Goode Jr., et al.	
		US-6,932,894	08-23-2005	Mao, et al.	
		US-6,936,006	08-30-2005	Sabra	
		US-6,950,708	09-27-2005	Bowman IV, et al.	
		US-6,958,705	10-25-2005	Lebel, et al.	
		US-6,968,294	11-22-2005	Gutta, et al.	
		US-6,971,274	12-06-2005	Olin	
		US-6,974,437	12-13-2005	Lebel, et al.	
		US-6,983,176	01-03-2006	Gardner, et al.	
		US-6,990,366	01-24-2006	Say, et al.	
		US-6,997,907	02-14-2006	Safabash, et al.	
		US-6,998,247	02-14-2006	Monfre, et al.	
		US-7,003,336	02-21-2006	Holker, et al.	
		US-7,003,340	02-21-2006	Say, et al.	
		US-7,003,341	02-21-2006	Say, et al.	
		US-7,022,072	04-04-2006	Fox, et al.	
		US-7,024,245	04-04-2006	Lebel, et al.	
		US-7,025,425	04-11-2006	Kovatchev, et al.	
		US-7,029,444	04-18-2006	Shin, et al.	
		US-7,041,068	05-09-2006	Freeman, et al.	
		US-7,043,287	05-09-2006	Khalil, et al.	
		US-7,043,287	05-09-2006	Khalil, et al.	
		US-7,052,483	05-30-2006	Wojcik	
		US-7,056,302	06-06-2006	Douglas	
		US-7,074,307	07-11-2006	Simpson, et al.	
		US-7,081,195	07-25-2006	Simpson, et al.	
		US-7,098,803	08-29-2006	Mann, et al.	
		US-7,108,778	09-19-2006	Simpson, et al.	
		US-7,110,803	09-19-2006	Shults, et al.	
		US-7,113,821	09-26-2006	Sun, et al.	
		US-7,118,667	10-10-2006	Lee	
		US-7,134,999	11-14-2006	Brauker, et al.	
		US-7,136,689	11-14-2006	Shults, et al.	
		US-7,153,265	12-26-2006	Vachon	

EXAMINER **DATE CONSIDERED**

Substitute Disclosure Statement Form (PTO-1449)
* EXAMINER: Initial if reference considered, whether or not citation is in conformance with MPEP 609. Draw line through citation if not in conformance and not considered. Include copy of this form with next communication to applicant.1 Applicant's unique citation designation number (optional) 2 Applicant is to place a check mark here if English language Translation is attached

ALL REFERENCES CONSIDERED EXCEPT WHERE LINED THROUGH. /J.L./

PTO/SB/08 (09-08)
Approved for use through 10/31/2008. OMB 0651-0031
U.S. Patent and Trademark Office; U.S. DEPARTMENT OF COMMERCE
Under the Paperwork Reduction Act of 1995, no persons are required to respond to a collection of information unless it contains a valid OMB control number..

Substitute for form 1449/PTO

INFORMATION DISCLOSURE STATEMENT BY APPLICANT

(Use as many sheets as necessary)

	Complete if Known
Application Number	13/925,694
Filing Date	June 24, 2013
First Named Inventor	Wesley Scott Harper, et al.
Art Unit	1631
Examiner Name	Not yet assigned

Sheet	7	of	26	Attorney Docket No: TS-02-180C01

US PATENT DOCUMENTS

Examiner Initials*	Cite No.	Document Number Number-Kind Code	Publication Date MM-DD-YYYY	Name of Patentee or Applicant of Cited Document	Pages, Columns, Lines, Where Relevant Passages or Relevant Figures Appear
		US-7,171,274	01-30-2007	Starkweather, et al.	
		US-7,190,988	03-13-2007	Say, et al.	
		US-7,192,450	03-20-2007	Brauker, et al.	
		US-7,198,606	04-03-2007	Boecker, et al.	
		US-7,225,535	06-05-2007	Feldman, et al.	
		US-7,226,978	06-05-2007	Tapsak, et al.	
		US-7,241,266	07-10-2007	Zhou, et al.	
		US-7,258,673	08-21-2007	Racchini, et al.	
		US-7,267,665	09-11-2007	Steil, et al.	
		US-7,276,029	10-02-2007	Goode Jr., et al.	
		US-7,295,867	11-13-2007	Berner, et al.	
		US-7,299,082	11-20-2007	Feldman, et al.	
		US-7,310,544	12-18-2007	Brister, et al.	
		US-7,317,938	01-08-2008	Lorenz, et al.	
		US-7,335,294	02-26-2008	Heller, et al.	
		US-7,354,420	04-08-2008	Steil, et al.	
		US-7,364,592	04-29-2008	Carr-Brendel, et al.	
		US-7,366,556	04-29-2008	Brister, et al.	
		US-7,379,765	05-27-2008	Petisce, et al.	
		US-7,401,111	07-15-2008	Batman, et al.	
		US-7,402,153	07-22-2008	Steil, et al.	
		US-7,424,318	09-09-2008	Brister, et al.	
		US-7,460,898	12-02-2008	Brister, et al.	
		US-7,467,003	12-16-2008	Brister, et al.	
		US-7,471,972	12-30-2008	Rhodes, et al.	
		US-7,474,992	01-06-2009	Ariyur	
		US-7,494,465	02-24-2009	Brister, et al.	
		US-7,497,827	03-03-2009	Brister, et al.	
		US-7,499,002	03-03-2009	Blasko, et al.	
		US-7,519,408	04-14-2009	Rasdal, et al.	
		US-7,547,281	06-16-2009	Hayes, et al.	
		US-7,569,030	08-04-2009	Lebel, et al.	
		US-7,583,990	09-01-2009	Goode Jr., et al.	
		US-7,591,801	09-22-2009	Brauker, et al.	
		US-7,599,726	10-06-2009	Goode Jr., et al.	
		US-7,613,491	11-03-2009	Boock, et al.	
		US-7,615,007	11-10-2009	Shults, et al.	
		US-7,618,369	11-17-2009	Hayter, et al.	
		US-7,632,228	12-15-2009	Brauker, et al.	
		US-7,637,868	12-29-2009	Saint, et al.	

EXAMINER **DATE CONSIDERED**

Substitute Disclosure Statement Form (PTO-1449)
* EXAMINER: Initial if reference considered, whether or not citation is in conformance with MPEP 609. Draw line through citation if not in conformance and not considered. Include copy of this form with next communication to applicant.1 Applicant's unique citation designation number (optional) 2 Applicant is to place a check mark here if English language Translation is attached

ALL REFERENCES CONSIDERED EXCEPT WHERE LINED THROUGH. /J.L./

PTO/SB/08 (09-08)
Approved for use through 10/31/2008. OMB 0651-0031
U.S. Patent and Trademark Office; U.S. DEPARTMENT OF COMMERCE
Under the Paperwork Reduction Act of 1995, no persons are required to respond to a collection of information unless it contains a valid OMB control number..

Substitute for form 1449/PTO

INFORMATION DISCLOSURE STATEMENT BY APPLICANT

(Use as many sheets as necessary)

	Complete if Known
Application Number	13/925,694
Filing Date	June 24, 2013
First Named Inventor	Wesley Scott Harper, et al.
Art Unit	1631
Examiner Name	Not yet assigned

Sheet	8	of	26	Attorney Docket No: TS-02-180C01

US PATENT DOCUMENTS

Examiner Initials*	Cite No.	Document Number Number-Kind Code	Publication Date MM-DD-YYYY	Name of Patentee or Applicant of Cited Document	Pages, Columns, Lines, Where Relevant Passages or Relevant Figures Appear
		US-7,640,048	12-29-2009	Dobbles, et al.	
		US-7,651,596	01-26-2010	Petisce, et al.	
		US-7,654,956	02-02-2010	Brister, et al.	
		US-7,657,297	02-02-2010	Simpson, et al.	
		US-7,699,775	04-20-2010	Desai, et al.	
		US-7,699,964	04-20-2010	Feldman, et al.	
		US-7,711,402	05-04-2010	Shults, et al.	
		US-7,713,574	05-11-2010	Brister, et al.	
		US-7,715,893	05-11-2010	Kamath, et al.	
		US-7,774,145	08-10-2010	Bruaker, et al.	
		US-7,778,680	08-17-2010	Goode Jr., et al.	
		US-7,826,981	11-02-2010	Goode, et al.	
		US-7,885,698	02-08-2011	Feldman, et al.	
		US-7,899,511	03-01-2011	Shults, et al.	
		US-7,905,833	03-15-2011	Brister, et al.	
		US-7,912,655	03-22-2011	Power, et al.	
		US-7,912,674	03-22-2011	Killoren Clark, et al.	
		US-7,914,450	03-29-2011	Goode Jr., et al.	
		US-7,928,850	04-19-2011	Hayter, et al.	
		US-7,974,672	07-05-2011	Shults, et al.	
		US-7,976,467	07-12-2011	Young, et al.	
		US-8,010,174	08-30-2011	Goode, et al.	
		US-8,066,639	11-29-2011	Nelson, et al.	
		US-8,216,138	07-10-2012	McGarraugh, et al.	
		US-2002/0019022	02-14-2002	Dunn, et al.	
		US-2002/0042090	04-11-2002	Heller, et al.	
		US-2002/0068860	06-06-2002	Clark	
		US-2002/0095076	07-18-2002	Krausman, et al.	
		US-2002/0103499	08-01-2002	Perez, et al.	
		US-2002/0106709	08-08-2002	Potts, et al.	
		US-2002/0128594	09-12-2002	Das, et al.	
		US-2002/0161288	10-31-2002	Shin, et al.	
		US-2002/0169635	11-14-2002	Shillingburg	
		US-2003/0004403	01-02-2003	Drinan, et al.	
		US-2003/0023317	01-30-2003	Brauker, et al.	
		US-2003/0032874	02-13-2003	Rhodes, et al.	
		US-2003/0042137	03-06-2003	Mao, et al.	
		US-2003/0065308	04-03-2003	Lebel, et al.	
		US-2003/0100821	05-29-2003	Heller, et al.	
		US-2003/0125612	07-03-2003	Fox, et al.	

EXAMINER **DATE CONSIDERED**

Substitute Disclosure Statement Form (PTO-1449)
* EXAMINER: Initial if reference considered, whether or not citation is in conformance with MPEP 609. Draw line through citation if not in conformance and not considered. Include copy of this form with next communication to applicant.1 Applicant's unique citation designation number (optional) 2 Applicant is to place a check mark here if English language Translation is attached

ALL REFERENCES CONSIDERED EXCEPT WHERE LINED THROUGH. /J.L./

PTO/SB/08 (09-08)
Approved for use through 10/31/2008. OMB 0651-0031
U.S. Patent and Trademark Office; U.S. DEPARTMENT OF COMMERCE
Under the Paperwork Reduction Act of 1995, no persons are required to respond to a collection of information unless it contains a valid OMB control number..

Substitute for form 1449/PTO

INFORMATION DISCLOSURE STATEMENT BY APPLICANT

(Use as many sheets as necessary)

	Complete if Known
Application Number	13/925,694
Filing Date	June 24, 2013
First Named Inventor	Wesley Scott Harper, et al.
Art Unit	1631
Examiner Name	Not yet assigned

Sheet	9	of	26	Attorney Docket No: TS-02-180C01

US PATENT DOCUMENTS

Examiner Initials*	Cite No.	Document Number Number-Kind Code	Publication Date MM-DD-YYYY	Name of Patentee or Applicant of Cited Document	Pages, Columns, Lines, Where Relevant Passages or Relevant Figures Appear
		US-2003/0130616	07-10-2003	Steil, et al.	
		US-2003/0134347	07-17-2003	Heller, et al.	
		US-2003/0168338	09-11-2003	Gao, et al.	
		US-2003/0176933	09-18-2003	Lebel, et al.	
		US-2003/0187338	10-02-2003	Say, et al.	
		US-2003/0191377	10-09-2003	Robinson, et al.	
		US-2003/0199790	10-23-2003	Boecker, et al.	
		US-2003/0208113	11-06-2003	Mault, et al.	
		US-2003/0212317	11-13-2003	Kovatchev, et al.	
		US-2003/0212379	11-13-2003	Bylund, et al.	
		US-2003/0216630	11-20-2003	Jersey-Willuhn, et al.	
		US-2003/0217966	11-27-2003	Tapsak, et al.	
		US-2004/0010186	01-15-2004	Kimball, et al	
		US-2004/0010207	01-15-2004	Flaherty, et al.	
		US-2004/0011671	01-22-2004	Shults, et al.	
		US-2004/0024553	02-05-2004	Monfre, et al.	
		US-2004/0039298	02-26-2004	Abreu	
		US-2004/0040840	03-04-2004	Mao, et al.	
		US-2004/0045879	03-11-2004	Shults, et al.	
		US-2004/0064068	04-01-2004	DeNuzzio, et al.	
		US-2004/0099529	05-27-2004	Mao, et al.	
		US-2004/0106858	06-03-2004	Say, et al.	
		US-2004/0122353	06-24-2004	Shahmirian, et al.	
		US-2004/0133164	07-08-2004	Funderburk, et al.	
		US-2004/0138588	07-15-2004	Saikley, et al.	
		US-2004/0146909	07-29-2004	Duong, et al.	
		US-2004/0152622	08-05-2004	Keith, et al.	
		US-2004/0167801	08-26-2004	Say, et al.	
		US-2004/0171921	09-02-2004	Say, et al.	
		US-2004/0176672	09-09-2004	Silver, et al.	
		US-2004/0186362	09-23-2004	Brauker, et al.	
		US-2004/0186365	09-23-2004	Jin, et al.	
		US-2004/0193025	09-30-2004	Steil, et al.	
		US-2004/0193090	09-30-2004	Lebel, et al.	
		US-2004/0197846	10-07-2004	Hockersmith, et al.	
		US-2004/0199059	10-07-2004	Brauker, et al.	
		US-2004/0204687	10-14-2004	Mogensen, et al.	
		US-2004/0225338	11-11-2004	Lebel, et al.	
		US-2004/0236200	11-25-2004	Say, et al.	
		US-2004/0254433	12-16-2004	Bandis, et al.	

EXAMINER **DATE CONSIDERED**

Substitute Disclosure Statement Form (PTO-1449)
* EXAMINER: Initial if reference considered, whether or not citation is in conformance with MPEP 609. Draw line through citation if not in conformance and not considered. Include copy of this form with next communication to applicant.1 Applicant's unique citation designation number (optional) 2 Applicant is to place a check mark here if English language Translation is attached

ALL REFERENCES CONSIDERED EXCEPT WHERE LINED THROUGH. /J.L./

PTO/SB/08 (09-08)
Approved for use through 10/31/2008. OMB 0651-0031
U.S. Patent and Trademark Office; U.S. DEPARTMENT OF COMMERCE
Under the Paperwork Reduction Act of 1995, no persons are required to respond to a collection of information unless it contains a valid OMB control number..

Substitute for form 1449/PTO

INFORMATION DISCLOSURE STATEMENT BY APPLICANT

(Use as many sheets as necessary)

	Complete if Known
Application Number	13/925,694
Filing Date	June 24, 2013
First Named Inventor	Wesley Scott Harper, et al.
Art Unit	1631
Examiner Name	Not yet assigned

Sheet	10	of	26	Attorney Docket No: TS-02-180C01

US PATENT DOCUMENTS

Examiner Initials*	Cite No.	Document Number Number-Kind Code	Publication Date MM-DD-YYYY	Name of Patentee or Applicant of Cited Document	Pages, Columns, Lines, Where Relevant Passages or Relevant Figures Appear
		US-2004/0267300	12-30-2004	Mace	
		US-2005/0004439	01-06-2005	Shin, et al.	
		US-2005/0004494	01-06-2005	Perez, et al.	
		US-2005/0010269	01-13-2005	Lebel, et al.	
		US-2005/0027177	02-03-2005	Shin, et al.	
		US-2005/0027180	02-03-2005	Goode, et al.	
		US-2005/0027181	02-03-2005	Goode, et al.	
		US-2005/0027462	02-03-2005	Goode, et al.	
		US-2005/0027463	02-03-2005	Goode, et al.	
		US-2005/0031689	02-10-2005	Shults, et al.	
		US-2005/0038332	02-17-2005	Saidara, et al.	
		US-2005/0043598	02-24-2005	Goode Jr., et al.	
		US-2005/0090607	04-28-2005	Tapsak, et al.	
		US-2005/0096511	05-05-2005	Fox, et al.	
		US-2005/0096512	05-05-2005	Fox, et al.	
		US-2005/0112169	05-26-2005	Brauker, et al.	
		US-2005/0113653	05-26-2005	Fox, et al.	
		US-2005/0114068	05-26-2005	Chey, et al.	
		US-2005/0121322	06-09-2005	Say, et al.	
		US-2005/0131346	06-16-2005	Douglas	
		US-2005/0137530	06-23-2005	Campbell, et al.	
		US-2005/0143635	06-30-2005	Kamath, et al.	
		US-2005/0176136	08-11-2005	Burd, et al.	
		US-2005/0177398	08-11-2005	Watanabe, et al.	
		US-2005/0182306	08-18-2005	Sloan	
		US-2005/0187720	08-25-2005	Goode Jr., et al.	
		US-2005/0192494	09-01-2005	Ginsberg	
		US-2005/0192557	09-01-2005	Brauker, et al.	
		US-2005/0195930	09-08-2005	Spital, et al.	
		US-2005/0199494	09-15-2005	Say, et al.	
		US-2005/0203360	09-15-2005	Brauker, et al.	
		US-2005/0239154	10-27-2005	Feldman, et al.	
		US-2005/0241957	11-03-2005	Mao, et al.	
		US-2005/0245795	11-03-2005	Goode Jr., et al.	
		US-2005/0245799	11-03-2005	Brauker, et al.	
		US-2005/0245839	11-03-2005	Stivoric, et al.	
		US-2005/0245904	11-03-2005	Estes, et al.	
		US-2005/0287620	12-29-2005	Heller, et al.	
		US-2006/0001538	01-05-2006	Kraft, et al.	
		US-2006/0004270	01-05-2006	Bedard, et al.	

EXAMINER **DATE CONSIDERED**

Substitute Disclosure Statement Form (PTO-1449)
* EXAMINER: Initial if reference considered, whether or not citation is in conformance with MPEP 609. Draw line through citation if not in conformance and not considered. Include copy of this form with next communication to applicant.1 Applicant's unique citation designation number (optional) 2 Applicant is to place a check mark here if English language Translation is attached

ALL REFERENCES CONSIDERED EXCEPT WHERE LINED THROUGH. /J.L./

PTO/SB/08 (09-08)
Approved for use through 10/31/2008. OMB 0651-0031
U.S. Patent and Trademark Office; U.S. DEPARTMENT OF COMMERCE
Under the Paperwork Reduction Act of 1995, no persons are required to respond to a collection of information unless it contains a valid OMB control number..

Substitute for form 1449/PTO

INFORMATION DISCLOSURE STATEMENT BY APPLICANT

(Use as many sheets as necessary)

	Complete if Known
Application Number	13/925,694
Filing Date	June 24, 2013
First Named Inventor	Wesley Scott Harper, et al.
Art Unit	1631
Examiner Name	Not yet assigned

Sheet	11	of	26	Attorney Docket No: TS-02-180C01

US PATENT DOCUMENTS

Examiner Initials*	Cite No.	Document Number Number-Kind Code	Publication Date MM-DD-YYYY	Name of Patentee or Applicant of Cited Document	Pages, Columns, Lines, Where Relevant Passages or Relevant Figures Appear
		US-2006/0015020	01-19-2006	Neale, et al.	
		US-2006/0015024	01-19-2006	Brister, et al.	
		US-2006/0016700	01-26-2006	Brister, et al.	
		US-2006/0017923	01-26-2006	Ruchti, et al.	
		US-2006/0019327	01-26-2006	Brister, et al.	
		US-2006/0020186	01-26-2006	Brister, et al.	
		US-2006/0020187	01-26-2006	Brister, et al.	
		US-2006/0020188	01-26-2006	Kamath, et al.	
		US-2006/0020189	01-26-2006	Brister, et al.	
		US-2006/0020190	01-26-2006	Kamath, et al.	
		US-2006/0020191	01-26-2006	Brister, et al.	
		US-2006/0020192	01-26-2006	Brister, et al.	
		US-2006/0020300	01-26-2006	Nghiem, et al.	
		US-2006/0029177	02-09-2006	Cranford Jr., et al.	
		US-2006/0031094	02-09-2006	Cohen, et al.	
		US-2006/0036139	02-16-2006	Brister, et al.	
		US-2006/0036140	02-16-2006	Brister, et al.	
		US-2006/0036141	02-16-2006	Kamath, et al.	
		US-2006/0036142	02-16-2006	Brister, et al.	
		US-2006/0036143	02-16-2006	Brister, et al.	
		US-2006/0036144	02-16-2006	Brister, et al.	
		US-2006/0036145	02-16-2006	Brister, et al.	
		US-2006/0091006	05-04-2006	Wang, et al.	
		US-2006/0142651	06-29-2006	Brister, et al.	
		US-2006/0155180	07-13-2006	Brister, et al.	
		US-2006/0166629	07-27-2006	Reggiardo	
		US-2006/0173260	08-03-2006	Gaoni, et al.	
		US-2006/0173406	08-03-2006	Hayes, et al.	
		US-2006/0173444	08-03-2006	Choy, et al.	
		US-2006/0183985	08-17-2006	Brister, et al.	
		US-2006/0189863	08-24-2006	Peyser, et al.	
		US-2006/0222566	10-05-2006	Brauker, et al.	
		US-2006/0224109	10-05-2006	Steil, et al.	
		US-2006/0229512	10-12-2006	Petisce, et al.	
		US-2006/0247508	11-02-2006	Fennell	
		US-2006/0253296	11-09-2006	Liisberg, et al.	
		US-2006/0264785	11-23-2006	Dring, et al.	
		US-2006/0272652	12-07-2006	Stocker, et al.	
		US-2007/0016381	01-18-2007	Kamath, et al.	
		US-2007/0027381	02-01-2007	Stafford	

EXAMINER **DATE CONSIDERED**

Substitute Disclosure Statement Form (PTO-1449)
* EXAMINER: Initial if reference considered, whether or not citation is in conformance with MPEP 609. Draw line through citation if not in conformance and not considered. Include copy of this form with next communication to applicant.1 Applicant's unique citation designation number (optional) 2 Applicant is to place a check mark here if English language Translation is attached

ALL REFERENCES CONSIDERED EXCEPT WHERE LINED THROUGH. /J.L./

PTO/SB/08 (09-08)
Approved for use through 10/31/2008. OMB 0651-0031
U.S. Patent and Trademark Office; U.S. DEPARTMENT OF COMMERCE
Under the Paperwork Reduction Act of 1995, no persons are required to respond to a collection of information unless it contains a valid OMB control number..

Substitute for form 1449/PTO

INFORMATION DISCLOSURE STATEMENT BY APPLICANT

(Use as many sheets as necessary)

	Complete if Known
Application Number	13/925,694
Filing Date	June 24, 2013
First Named Inventor	Wesley Scott Harper, et al.
Art Unit	1631
Examiner Name	Not yet assigned

Sheet	12	of	26	Attorney Docket No: TS-02-180C01

US PATENT DOCUMENTS

Examiner Initials*	Cite No.	Document Number Number-Kind Code	Publication Date MM-DD-YYYY	Name of Patentee or Applicant of Cited Document	Pages, Columns, Lines, Where Relevant Passages or Relevant Figures Appear
		US-2007/0032706	02-08-2007	Kamath, et al.	
		US-2007/0033074	02-08-2007	Nitzan, et al.	
		US-2007/0038053	02-15-2007	Berner, et al.	
		US-2007/0060803	03-15-2007	Liljeryd, et al.	
		US-2007/0060814	03-15-2007	Stafford	
		US-2007/0066873	03-22-2007	Kamath, et al.	
		US-2007/0071681	03-29-2007	Gadkar, et al.	
		US-2007/0073129	03-29-2007	Shah, et al.	
		US-2007/0078314	04-05-2007	Grounsell, et al.	
		US-2007/0078320	04-05-2007	Stafford	
		US-2007/0078321	04-05-2007	Mazza, et al.	
		US-2007/0078322	04-05-2007	Stafford	
		US-2007/0078323	04-05-2007	Reggiardo, et al.	
		US-2007/0093786	04-26-2007	Goldsmith, et al.	
		US-2007/0106135	05-10-2007	Sloan, et al.	
		US-2007/0118405	05-24-2007	Campbell, et al.	
		US-2007/0124002	05-31-2007	Estes, et al.	
		US-2007/0149875	06-28-2007	Ouyang, et al.	
		US-2007/0163880	07-19-2007	Woo, et al.	
		US-2007/0168224	07-19-2007	Letzt, et al.	
		US-2007/0173706	07-26-2007	Neinast, et al.	
		US-2007/0173761	07-26-2007	Kanderian, et al.	
		US-2007/0179349	08-02-2007	Hoyme, et al.	
		US-2007/0179352	08-02-2007	Randlov, et al.	
		US-2007/0191701	08-16-2007	Feldman, et al.	
		US-2007/0197889	08-23-2007	Brauker, et al.	
		US-2007/0203407	08-30-2007	Hoss, et al.	
		US-2007/0203966	08-30-2007	Brauker, et al.	
		US-2007/0213657	09-13-2007	Jennewine, et al.	
		US-2007/0232880	10-04-2007	Siddiqui, et al.	
		US-2007/0235331	10-11-2007	Simpson, et al.	
		US-2007/0249922	10-25-2007	Peyser, et al.	
		US-2007/0270672	11-22-2007	Hayter, et al.	
		US-2008/0009692	01-10-2008	Stafford	
		US-2008/0017522	01-24-2008	Heller, et al.	
		US-2008/0021666	01-24-2008	Goode Jr., et al.	
		US-2008/0029391	02-07-2008	Mao, et al.	
		US-2008/0033254	02-07-2008	Kamath, et al.	
		US-2008/0039702	02-14-2008	Hayter, et al.	
		US-2008/0045824	02-21-2008	Tapsak, et al.	

EXAMINER **DATE CONSIDERED**

Substitute Disclosure Statement Form (PTO-1449)
* EXAMINER: Initial if reference considered, whether or not citation is in conformance with MPEP 609. Draw line through citation if not in conformance and not considered. Include copy of this form with next communication to applicant.1 Applicant's unique citation designation number (optional) 2 Applicant is to place a check mark here if English language Translation is attached

ALL REFERENCES CONSIDERED EXCEPT WHERE LINED THROUGH. /J.L./

PTO/SB/08 (09-08)
Approved for use through 10/31/2008. OMB 0651-0031
U.S. Patent and Trademark Office; U.S. DEPARTMENT OF COMMERCE
Under the Paperwork Reduction Act of 1995, no persons are required to respond to a collection of information unless it contains a valid OMB control number..

Substitute for form 1449/PTO

INFORMATION DISCLOSURE STATEMENT BY APPLICANT

(Use as many sheets as necessary)

	Complete if Known
Application Number	13/925,694
Filing Date	June 24, 2013
First Named Inventor	Wesley Scott Harper, et al.
Art Unit	1631
Examiner Name	Not yet assigned

Sheet	13	of	26	Attorney Docket No: TS-02-180C01

US PATENT DOCUMENTS

Examiner Initials*	Cite No.	Document Number Number-Kind Code	Publication Date MM-DD-YYYY	Name of Patentee or Applicant of Cited Document	Pages, Columns, Lines, Where Relevant Passages or Relevant Figures Appear
		US-2008/0058625	03-06-2008	McGarraugh, et al.	
		US-2008/0064937	03-13-2008	McGarraugh, et al.	
		US-2008/0071156	03-20-2008	Brister, et al.	
		US-2008/0071157	03-20-2008	McGarraugh, et al.	
		US-2008/0071158	03-20-2008	McGarraugh, et al.	
		US-2008/0071580	03-20-2008	Marcus	
		US-2008/0081977	04-03-2008	Hayter, et al.	
		US-2008/0083617	04-10-2008	Simpson, et al.	
		US-2008/0086042	04-10-2008	Brister, et al.	
		US-2008/0086044	04-10-2008	Brister, et al.	
		US-2008/0086273	04-10-2008	Shults, et al.	
		US-2008/0097289	04-24-2008	Steil, et al.	
		US-2008/0108942	05-08-2008	Brister, et al.	
		US-2008/0119703	05-22-2008	Brister, et al.	
		US-2008/0119708	05-22-2008	Budiman	
		US-2008/0139910	06-12-2008	Mastrototaro, et al.	
		US-2008/0154513	06-26-2008	Kovatchev, et al.	
		US-2008/0161666	07-03-2008	Feldman, et al.	
		US-2008/0167543	07-10-2008	Say, et al.	
		US-2008/0172205	07-17-2008	Breton, et al.	
		US-2008/0183060	07-31-2008	Steil, et al.	
		US-2008/0183061	07-31-2008	Goode, et al.	
		US-2008/0183399	07-31-2008	Goode, et al.	
		US-2008/0188731	08-07-2008	Brister, et al.	
		US-2008/0188796	08-07-2008	Steil, et al.	
		US-2008/0189051	08-07-2008	Goode, et al.	
		US-2008/0194934	08-14-2008	Ray, et al.	
		US-2008/0194935	08-14-2008	Brister, et al.	
		US-2008/0194936	08-14-2008	Goode, et al.	
		US-2008/0194937	08-14-2008	Goode, et al.	
		US-2008/0194938	08-14-2008	Brister, et al.	
		US-2008/0195232	08-14-2008	Carr-Brendel, et al.	
		US-2008/0195967	08-14-2008	Goode, et al.	
		US-2008/0197024	08-21-2008	Simpson, et al.	
		US-2008/0200788	08-21-2008	Brister, et al.	
		US-2008/0200789	08-21-2008	Brister, et al.	
		US-2008/0200791	08-21-2008	Simpson, et al.	
		US-2008/0208025	08-28-2008	Shults, et al.	
		US-2008/0208113	08-28-2008	Damiano, et al.	
		US-2008/0214915	09-04-2008	Brister, et al.	

EXAMINER **DATE CONSIDERED**

Substitute Disclosure Statement Form (PTO-1449)
* EXAMINER: Initial if reference considered, whether or not citation is in conformance with MPEP 609. Draw line through citation if not in conformance and not considered. Include copy of this form with next communication to applicant.1 Applicant's unique citation designation number (optional) 2 Applicant is to place a check mark here if English language Translation is attached

ALL REFERENCES CONSIDERED EXCEPT WHERE LINED THROUGH. /J.L./

PTO/SB/08 (09-08)
Approved for use through 10/31/2008. OMB 0651-0031
U.S. Patent and Trademark Office; U.S. DEPARTMENT OF COMMERCE
Under the Paperwork Reduction Act of 1995, no persons are required to respond to a collection of information unless it contains a valid OMB control number..

Substitute for form 1449/PTO

INFORMATION DISCLOSURE STATEMENT BY APPLICANT

(Use as many sheets as necessary)

	Complete if Known
Application Number	13/925,694
Filing Date	June 24, 2013
First Named Inventor	Wesley Scott Harper, et al.
Art Unit	1631
Examiner Name	Not yet assigned

Sheet	14	of	26	Attorney Docket No: TS-02-180C01

US PATENT DOCUMENTS

Examiner Initials*	Cite No.	Document Number Number-Kind Code	Publication Date MM-DD-YYYY	Name of Patentee or Applicant of Cited Document	Pages, Columns, Lines, Where Relevant Passages or Relevant Figures Appear
		US-2008/0214918	09-04-2008	Brister, et al.	
		US-2008/0228051	09-18-2008	Shults, et al.	
		US-2008/0228054	09-18-2008	Shults, et al.	
		US-2008/0234992	09-25-2008	Ray, et al.	
		US-2008/0242961	10-02-2008	Brister, et al.	
		US-2008/0255434	10-16-2008	Hayter, et al.	
		US-2008/0255437	10-16-2008	Hayter	
		US-2008/0255438	10-16-2008	Saudara, et al.	
		US-2008/0255808	10-16-2008	Hayter	
		US-2008/0256048	10-16-2008	Hayter	
		US-2008/0262469	10-23-2008	Brister, et al.	
		US-2008/0275313	11-06-2008	Brister, et al.	
		US-2008/0278331	11-13-2008	Hayter, et al.	
		US-2008/0287755	11-20-2008	Sass, et al.	
		US-2008/0287761	11-20-2008	Hayter	
		US-2008/0287761	11-20-2008	Hayter, et al.	
		US-2008/0287762	11-20-2008	Hayter	
		US-2008/0287763	11-20-2008	Hayter	
		US-2008/0287764	11-20-2008	Rasdal, et al.	
		US-2008/0287765	11-20-2008	Rasdal, et al.	
		US-2008/0287766	11-20-2008	Rasdal, et al.	
		US-2008/0288180	11-20-2008	Hayter	
		US-2008/0288204	11-20-2008	Hayter, et al.	
		US-2008/0296155	12-04-2008	Shults, et al.	
		US-2008/0300572	12-04-2008	Rankers, et al.	
		US-2008/0306368	12-11-2008	Goode, et al.	
		US-2008/0306434	12-11-2008	Dobbles, et al.	
		US-2008/0306435	12-11-2008	Kamath, et al.	
		US-2008/0306444	12-11-2008	Brister, et al.	
		US-2008/0312841	12-18-2008	Hayter	
		US-2008/0312842	12-18-2008	Hayter	
		US-2008/0312844	12-18-2008	Hayter, et al.	
		US-2008/0312845	12-18-2008	Hayter, et al.	
		US-2008/0314395	12-25-2008	Kovatchev	
		US-2008/0319279	12-25-2008	Ramsay, et al.	
		US-2009/0005665	01-01-2009	Hayter, et al.	
		US-2009/0005665	01-01-2009	Hayter, et al.	
		US-2009/0006034	01-01-2009	Hayter, et al.	
		US-2009/0012379	01-08-2009	Goode, et al.	
		US-2009/0018424	01-15-2009	Kamath, et al.	

EXAMINER **DATE CONSIDERED**

Substitute Disclosure Statement Form (PTO-1449)
* EXAMINER: Initial if reference considered, whether or not citation is in conformance with MPEP 609. Draw line through citation if not in conformance and not considered. Include copy of this form with next communication to applicant.1 Applicant's unique citation designation number (optional) 2 Applicant is to place a check mark here if English language Translation is attached

ALL REFERENCES CONSIDERED EXCEPT WHERE LINED THROUGH. /J.L./

PTO/SB/08 (09-08)
Approved for use through 10/31/2008. OMB 0651-0031
U.S. Patent and Trademark Office; U.S. DEPARTMENT OF COMMERCE
Under the Paperwork Reduction Act of 1995, no persons are required to respond to a collection of information unless it contains a valid OMB control number..

Substitute for form 1449/PTO

INFORMATION DISCLOSURE STATEMENT BY APPLICANT

(Use as many sheets as necessary)

	Complete if Known
Application Number	13/925,694
Filing Date	June 24, 2013
First Named Inventor	Wesley Scott Harper, et al.
Art Unit	1631
Examiner Name	Not yet assigned

Sheet	15	of	26	Attorney Docket No: TS-02-180C01

US PATENT DOCUMENTS

Examiner Initials*	Cite No.	Document Number Number-Kind Code	Publication Date MM-DD-YYYY	Name of Patentee or Applicant of Cited Document	Pages, Columns, Lines, Where Relevant Passages or Relevant Figures Appear
		US-2009/0018425	01-15-2009	Ouyang, et al.	
		US-2009/0030294	01-29-2009	Petisce, et al.	
		US-2009/0033482	02-05-2009	Hayter, et al.	
		US-2009/0036747	02-05-2009	Hayter, et al.	
		US-2009/0036758	02-05-2009	Brauker, et al.	
		US-2009/0036760	02-05-2009	Hayter	
		US-2009/0036763	02-05-2009	Brauker, et al.	
		US-2009/0043181	02-12-2009	Brauker, et al.	
		US-2009/0043182	02-12-2009	Brauker, et al.	
		US-2009/0043525	02-12-2009	Brauker, et al.	
		US-2009/0043541	02-12-2009	Brauker, et al.	
		US-2009/0043542	02-12-2009	Brauker, et al.	
		US-2009/0045055	02-19-2009	Rhodes, et al.	
		US-2009/0048503	02-19-2009	Dalal, et al.	
		US-2009/0054750	02-26-2009	Jennewine	
		US-2009/0055149	02-26-2009	Hayter, et al.	
		US-2009/0062633	03-05-2009	Brauker, et al.	
		US-2009/0062635	03-05-2009	Brauker, et al.	
		US-2009/0062767	03-05-2009	VanAntwerp, et al.	
		US-2009/0063402	03-05-2009	Hayter	
		US-2009/0076356	03-19-2009	Simpson, et al.	
		US-2009/0076360	03-19-2009	Brister, et al.	
		US-2009/0076361	03-19-2009	Kamath, et al.	
		US-2009/0082693	03-26-2009	Stafford	
		US-2009/0099436	04-16-2009	Brister, et al.	
		US-2009/0105570	04-23-2009	Sloan, et al.	
		US-2009/0105636	04-23-2009	Hayter, et al.	
		US-2009/0112154	04-30-2009	Montgomery, et al.	
		US-2009/0112478	04-30-2009	Mueller Jr., et al.	
		US-2009/0124877	05-14-2009	Goode, et al.	
		US-2009/0124878	05-14-2009	Goode, et al.	
		US-2009/0124879	05-14-2009	Brister, et al.	
		US-2009/0124964	05-14-2009	Leach, et al.	
		US-2009/0131768	05-21-2009	Simpson, et al.	
		US-2009/0131769	05-21-2009	Leach, et al.	
		US-2009/0131776	05-21-2009	Simpson, et al.	
		US-2009/0131777	05-21-2009	Simpson, et al.	
		US-2009/0137886	05-28-2009	Shariati, et al.	
		US-2009/0137887	05-28-2009	Shariati, et al.	
		US-2009/0143659	06-04-2009	Li, et al.	

EXAMINER **DATE CONSIDERED**

Substitute Disclosure Statement Form (PTO-1449)
* EXAMINER: Initial if reference considered, whether or not citation is in conformance with MPEP 609. Draw line through citation if not in conformance and not considered. Include copy of this form with next communication to applicant.1 Applicant's unique citation designation number (optional) 2 Applicant is to place a check mark here if English language Translation is attached

ALL REFERENCES CONSIDERED EXCEPT WHERE LINED THROUGH. /J.L./

PTO/SB/08 (09-08)
Approved for use through 10/31/2008. OMB 0651-0031
U.S. Patent and Trademark Office; U.S. DEPARTMENT OF COMMERCE
Under the Paperwork Reduction Act of 1995, no persons are required to respond to a collection of information unless it contains a valid OMB control number..

Substitute for form 1449/PTO

INFORMATION DISCLOSURE STATEMENT BY APPLICANT

(Use as many sheets as necessary)

	Complete if Known
Application Number	13/925,694
Filing Date	June 24, 2013
First Named Inventor	Wesley Scott Harper, et al.
Art Unit	1631
Examiner Name	Not yet assigned

Sheet	16	of	26	Attorney Docket No: TS-02-180C01

US PATENT DOCUMENTS

Examiner Initials*	Cite No.	Document Number Number-Kind Code	Publication Date MM-DD-YYYY	Name of Patentee or Applicant of Cited Document	Pages, Columns, Lines, Where Relevant Passages or Relevant Figures Appear
		US-2009/0143660	06-04-2009	Brister, et al.	
		US-2009/0156919	06-18-2009	Brister, et al.	
		US-2009/0156924	06-18-2009	Shariati, et al.	
		US-2009/0157430	06-18-2009	Rule, et al.	
		US-2009/0163790	06-25-2009	Brister, et al.	
		US-2009/0163791	06-25-2009	Brister, et al.	
		US-2009/0164190	06-25-2009	Hayter	
		US-2009/0164239	06-25-2009	Hayter, et al.	
		US-2009/0164251	06-25-2009	Hayter	
		US-2009/0178459	07-16-2009	Li, et al.	
		US-2009/0182217	07-16-2009	Li, et al.	
		US-2009/0192366	07-30-2009	Mensinger, et al.	
		US-2009/0192380	07-30-2009	Shariati, et al.	
		US-2009/0192722	07-30-2009	Shariati, et al.	
		US-2009/0192724	07-30-2009	Brauker, et al.	
		US-2009/0192745	07-30-2009	Kamath, et al.	
		US-2009/0192751	07-30-2009	Kamath, et al.	
		US-2009/0198118	08-06-2009	Hayter, et al.	
		US-2009/0203981	08-13-2009	Brauker, et al.	
		US-2009/0204341	08-13-2009	Brauker, et al.	
		US-2009/0210249	08-20-2009	Rasch-Menges, et al.	
		US-2009/0216103	08-27-2009	Brister, et al.	
		US-2009/0240120	09-24-2009	Mensinger, et al.	
		US-2009/0240128	09-24-2009	Mensinger, et al.	
		US-2009/0240193	09-24-2009	Mensinger, et al.	
		US-2009/0242399	10-01-2009	Kamath, et al.	
		US-2009/0242425	10-01-2009	Kamath, et al.	
		US-2009/0247855	10-01-2009	Boock, et al.	
		US-2009/0247856	10-01-2009	Boock, et al.	
		US-2009/0247857	10-01-2009	Harper, et al.	
		US-2009/0287073	11-19-2009	Boock, et al.	
		US-2009/0287074	11-19-2009	Shults, et al.	
		US-2009/0299155	12-03-2009	Yang, et al.	
		US-2009/0299156	12-03-2009	Simpson, et al.	
		US-2009/0299162	12-03-2009	Brauker, et al.	
		US-2009/0299276	12-03-2009	Brauker, et al.	
		US-2010/0010324	01-14-2010	Brauker, et al.	
		US-2010/0010331	01-14-2010	Brauker, et al.	
		US-2010/0010332	01-14-2010	Brauker, et al.	
		US-2010/0016687	01-21-2010	Brauker, et al.	

EXAMINER **DATE CONSIDERED**

Substitute Disclosure Statement Form (PTO-1449)
* EXAMINER: Initial if reference considered, whether or not citation is in conformance with MPEP 609. Draw line through citation if not in conformance and not considered. Include copy of this form with next communication to applicant.1 Applicant's unique citation designation number (optional) 2 Applicant is to place a check mark here if English language Translation is attached

ALL REFERENCES CONSIDERED EXCEPT WHERE LINED THROUGH. /J.L./

PTO/SB/08 (09-08)
Approved for use through 10/31/2008. OMB 0651-0031
U.S. Patent and Trademark Office; U.S. DEPARTMENT OF COMMERCE
Under the Paperwork Reduction Act of 1995, no persons are required to respond to a collection of information unless it contains a valid OMB control number..

Substitute for form 1449/PTO

INFORMATION DISCLOSURE STATEMENT BY APPLICANT

(Use as many sheets as necessary)

	Complete if Known
Application Number	13/925,694
Filing Date	June 24, 2013
First Named Inventor	Wesley Scott Harper, et al.
Art Unit	1631
Examiner Name	Not yet assigned

Sheet	17	of	26	Attorney Docket No: TS-02-180C01

US PATENT DOCUMENTS

Examiner Initials*	Cite No.	Document Number Number-Kind Code	Publication Date MM-DD-YYYY	Name of Patentee or Applicant of Cited Document	Pages, Columns, Lines, Where Relevant Passages or Relevant Figures Appear
		US-2010/0016698	01-21-2010	Rasdal, et al.	
		US-2010/0022855	01-28-2010	Brauker, et al.	
		US-2010/0023291	01-28-2010	Hayter, et al.	
		US-2010/0030038	02-04-2010	Brauker, et al.	
		US-2010/0030053	02-04-2010	Goode Jr., et al.	
		US-2010/0030484	02-04-2010	Brauker, et al.	
		US-2010/0030485	02-04-2010	Brauker, et al.	
		US-2010/0036215	02-11-2010	Goode Jr., et al.	
		US-2010/0036216	02-11-2010	Goode Jr., et al.	
		US-2010/0036222	02-11-2010	Goode Jr., et al.	
		US-2010/0036223	02-11-2010	Goode Jr., et al.	
		US-2010/0036225	02-11-2010	Goode Jr., et al.	
		US-2010/0041971	02-18-2010	Goode Jr., et al.	
		US-2010/0045465	02-25-2010	Brauker, et al.	
		US-2010/0049024	02-25-2010	Saint, et al.	
		US-2010/0057040	03-04-2010	Hayter	
		US-2010/0057041	03-04-2010	Hayter	
		US-2010/0057042	03-04-2010	Hayter	
		US-2010/0057044	03-04-2010	Hayter	
		US-2010/0057057	03-04-2010	Hayter, et al.	
		US-2010/0063373	03-11-2010	Kamath, et al.	
		US-2010/0076283	03-25-2010	Simpson, et al.	
		US-2010/0081906	04-01-2010	Hayter, et al.	
		US-2010/0081908	04-01-2010	Dobbles, et al.	
		US-2010/0081909	04-01-2010	Budiman, et al.	
		US-2010/0081910	04-01-2010	Brister, et al.	
		US-2010/0087724	04-08-2010	Brauker, et al.	
		US-2010/0096259	04-22-2010	Zhang, et al.	
		US-2010/0099970	04-22-2010	Shults, et al.	
		US-2010/0099971	04-22-2010	Shults, et al.	
		US-2010/0105999	04-29-2010	Dixon, et al.	
		US-2010/0119693	05-13-2010	Tapsak, et al.	
		US-2010/0121169	05-13-2010	Petisce, et al.	
		US-2010/0152548	06-17-2010	Koski	
		US-2010/0152554	06-17-2010	Steine, et al.	
		US-2010/0160757	06-24-2010	Weinert, et al.	
		US-2010/0160759	06-24-2010	Celentano, et al.	
		US-2010/0168538	07-01-2010	Keenan, et al.	
		US-2010/0168546	07-01-2010	Kamath, et al.	
		US-2010/0174158	07-08-2010	Kamath, et al.	

EXAMINER **DATE CONSIDERED**

Substitute Disclosure Statement Form (PTO-1449)
* EXAMINER: Initial if reference considered, whether or not citation is in conformance with MPEP 609. Draw line through citation if not in conformance and not considered. Include copy of this form with next communication to applicant.1 Applicant's unique citation designation number (optional) 2 Applicant is to place a check mark here if English language Translation is attached

ALL REFERENCES CONSIDERED EXCEPT WHERE LINED THROUGH. /J.L./

PTO/SB/08 (09-08)
Approved for use through 10/31/2008. OMB 0651-0031
U.S. Patent and Trademark Office; U.S. DEPARTMENT OF COMMERCE
Under the Paperwork Reduction Act of 1995, no persons are required to respond to a collection of information unless it contains a valid OMB control number..

Substitute for form 1449/PTO

INFORMATION DISCLOSURE STATEMENT BY APPLICANT

(Use as many sheets as necessary)

	Complete if Known
Application Number	13/925,694
Filing Date	June 24, 2013
First Named Inventor	Wesley Scott Harper, et al.
Art Unit	1631
Examiner Name	Not yet assigned

Sheet	18	of	26	Attorney Docket No: TS-02-180C01

US PATENT DOCUMENTS

Examiner Initials*	Cite No.	Document Number Number-Kind Code	Publication Date MM-DD-YYYY	Name of Patentee or Applicant of Cited Document	Pages, Columns, Lines, Where Relevant Passages or Relevant Figures Appear
		US-2010/0174163	07-08-2010	Brister, et al.	
		US-2010/0174164	07-08-2010	Brister, et al.	
		US-2010/0174165	07-08-2010	Brister, et al.	
		US-2010/0174166	07-08-2010	Brister, et al.	
		US-2010/0174167	07-08-2010	Kamath, et al.	
		US-2010/0174168	07-08-2010	Goode, et al.	
		US-2010/0179401	07-15-2010	Rasdal, et al.	
		US-2010/0179402	07-15-2010	Goode, et al.	
		US-2010/0179404	07-15-2010	Kamath, et al.	
		US-2010/0179408	07-15-2010	Kamath, et al.	
		US-2010/0179409	07-15-2010	Kamath, et al.	
		US-2010/0185065	07-22-2010	Goode, et al.	
		US-2010/0185070	07-22-2010	Brister, et al.	
		US-2010/0185071	07-22-2010	Simpson, et al.	
		US-2010/0185072	07-22-2010	Goode, et al.	
		US-2010/0185075	07-22-2010	Brister, et al.	
		US-2010/0191082	07-29-2010	Brister, et al.	
		US-2010/0191085	07-29-2010	Budiman	
		US-2010/0191087	07-29-2010	Talbot, et al.	
		US-2010/0191472	07-29-2010	Doniger, et al.	
		US-2010/0198035	08-05-2010	Kamath, et al.	
		US-2010/0198036	08-05-2010	Kamath, et al.	
		US-2010/0198142	08-05-2010	Sloan, et al.	
		US-2010/0204557	08-12-2010	Kiaie, et al	
		US-2010/0212583	08-26-2010	Brister, et al.	
		US-2010/0214104	08-26-2010	Goode, et al.	
		US-2010/0217557	08-26-2010	Kamath, et al.	
		US-2010/0223013	09-02-2010	Kamath, et al.	
		US-2010/0223022	09-02-2010	Kamath, et al.	
		US-2010/0223023	09-02-2010	Kamath, et al.	
		US-2010/0228109	09-09-2010	Kamath, et al.	
		US-2010/0228497	09-09-2010	Kamath, et al.	
		US-2010/0234710	09-16-2010	Budiman, et al.	
		US-2010/0240975	09-23-2010	Goode, et al.	
		US-2010/0240976	09-23-2010	Goode, et al.	
		US-2010/0259543	10-14-2010	Tarassenko, et al.	
		US-2010/0261987	10-14-2010	Kamath, et al.	
		US-2010/0274107	10-28-2010	Boock, et al.	
		US-2010/0274515	10-28-2010	Hoss, et al.	
		US-2010/0280341	11-04-2010	Boock, et al.	

EXAMINER **DATE CONSIDERED**

Substitute Disclosure Statement Form (PTO-1449)
* EXAMINER: Initial if reference considered, whether or not citation is in conformance with MPEP 609. Draw line through citation if not in conformance and not considered. Include copy of this form with next communication to applicant.1 Applicant's unique citation designation number (optional) 2 Applicant is to place a check mark here if English language Translation is attached

ALL REFERENCES CONSIDERED EXCEPT WHERE LINED THROUGH. /J.L./

PTO/SB/08 (09-08)
Approved for use through 10/31/2008. OMB 0651-0031
U.S. Patent and Trademark Office; U.S. DEPARTMENT OF COMMERCE
Under the Paperwork Reduction Act of 1995, no persons are required to respond to a collection of information unless it contains a valid OMB control number..

Substitute for form 1449/PTO

INFORMATION DISCLOSURE STATEMENT BY APPLICANT

(Use as many sheets as necessary)

	Complete if Known
Application Number	13/925,694
Filing Date	June 24, 2013
First Named Inventor	Wesley Scott Harper, et al.
Art Unit	1631
Examiner Name	Not yet assigned

Sheet	19	of	26	Attorney Docket No: TS-02-180C01

US PATENT DOCUMENTS

Examiner Initials*	Cite No.	Document Number Number-Kind Code	Publication Date MM-DD-YYYY	Name of Patentee or Applicant of Cited Document	Pages, Columns, Lines, Where Relevant Passages or Relevant Figures Appear
		US-2010/0280782	11-04-2010	Harper, et al.	
		US-2010/0286496	11-11-2010	Simpson, et al.	
		US-2010/0298684	11-25-2010	Leach, et al.	
		US-2010/0324403	12-23-2010	Brister, et al.	
		US-2010/0331644	12-30-2010	Neale, et al.	
		US-2010/0331648	12-30-2010	Kamath, et al.	
		US-2010/0331651	12-30-2010	Groll	
		US-2010/0331656	12-30-2010	Mensinger, et al.	
		US-2010/0331657	12-30-2010	Mensinger, et al.	
		US-2011/0004085	01-06-2011	Mensinger, et al.	
		US-2011/0009727	01-13-2011	Mensinger, et al.	
		US-2011/0021889	01-27-2011	Hoss, et al.	
		US-2011/0024043	02-03-2011	Boock, et al.	
		US-2011/0024307	02-03-2011	Simpson, et al.	
		US-2011/0027127	02-03-2011	Simpson, et al.	
		US-2011/0027453	02-03-2011	Boock, et al.	
		US-2011/0027458	02-03-2011	Boock, et al.	
		US-2011/0028815	02-03-2011	Simpson, et al.	
		US-2011/0028816	02-03-2011	Simpson, et al.	
		US-2011/0046467	02-24-2011	Simpson, et al.	
		US-2011/0077469	03-31-2011	Blocker, et al.	
		US-2011/0077490	03-31-2011	Simpson, et al.	
		US-2011/0118579	05-19-2011	Goode, et al.	
		US-2011/0118580	05-19-2011	Goode, et al.	
		US-2011/0123971	05-26-2011	Berkowitz, et al.	
		US-2011/0124992	05-26-2011	Brauker, et al.	
		US-2011/0124997	05-26-2011	Goode, et al.	
		US-2011/0125410	05-26-2011	Goode, et al.	
		US-2011/0130970	06-02-2011	Goode, et al.	
		US-2011/0130971	06-02-2011	Goode, et al.	
		US-2011/0130998	06-02-2011	Goode, et al.	
		US-2011/0137571	06-09-2011	Power, et al.	
		US-2011/0144465	06-16-2011	Shults, et al.	
		US-2011/0148905	06-23-2011	Simmons, et al.	
		US-2011/0178378	07-21-2011	Brister, et al.	
		US-2011/0184752	07-28-2011	Ray, et al.	
		US-2011/0190614	08-04-2011	Brister, et al.	
		US-2011/0201910	08-18-2011	Rasdal, et al.	
		US-2011/0201911	08-18-2011	Johnson, et al.	
		US-2011/0208027	08-25-2011	Wagner, et al.	

EXAMINER **DATE CONSIDERED**

Substitute Disclosure Statement Form (PTO-1449)
* EXAMINER: Initial if reference considered, whether or not citation is in conformance with MPEP 609. Draw line through citation if not in conformance and not considered. Include copy of this form with next communication to applicant.1 Applicant's unique citation designation number (optional) 2 Applicant is to place a check mark here if English language Translation is attached

ALL REFERENCES CONSIDERED EXCEPT WHERE LINED THROUGH. /J.L./

PTO/SB/08 (09-08)
Approved for use through 10/31/2008. OMB 0651-0031
U.S. Patent and Trademark Office; U.S. DEPARTMENT OF COMMERCE
Under the Paperwork Reduction Act of 1995, no persons are required to respond to a collection of information unless it contains a valid OMB control number..

Substitute for form 1449/PTO

INFORMATION DISCLOSURE STATEMENT BY APPLICANT

(Use as many sheets as necessary)

	Complete if Known
Application Number	13/925,694
Filing Date	June 24, 2013
First Named Inventor	Wesley Scott Harper, et al.
Art Unit	1631
Examiner Name	Not yet assigned

Sheet	20	of	26	Attorney Docket No: TS-02-180C01

US PATENT DOCUMENTS					
Examiner Initials*	Cite No.	Document Number Number-Kind Code	Publication Date MM-DD-YYYY	Name of Patentee or Applicant of Cited Document	Pages, Columns, Lines, Where Relevant Passages or Relevant Figures Appear
		US-2011/0218414	09-08-2011	Kamath, et al.	
		US-2011/0231107	09-22-2011	Brauker, et al.	
		US-2011/0231140	09-22-2011	Goode, et al.	
		US-2011/0231141	09-22-2011	Goode, et al.	
		US-2011/0231142	09-22-2011	Goode, et al.	
		US-2011/0253533	10-20-2011	Shults, et al.	
		US-2011/0257895	10-20-2011	Brauker, et al.	
		US-2011/0263958	10-27-2011	Brauker, et al.	
		US-2011/0263959	10-27-2011	Young, et al.	
		US-2011/0264378	10-27-2011	Breton, et al.	
		US-2011/0270062	11-03-2011	Goode, et al.	
		US-2011/0270158	11-03-2011	Brauker, et al.	
		US-2011/0275919	11-10-2011	Petisce, et al.	
		US-2011/0290645	12-01-2011	Brister, et al.	
		US-2011/0313543	12-22-2011	Brauker, et al.	
		US-2011/0319739	12-29-2011	Kamath, et al.	
		US-2011/0320130	12-29-2011	Valdes, et al.	
		US-2012/0035445	02-09-2012	Boock, et al.	
		US-2012/0040101	02-16-2012	Tapsak, et al.	
		US-2012/0046534	02-23-2012	Simpson, et al.	
		US-2012/0078071	03-29-2012	Bohm, et al.	
		US-2012/0108934	05-03-2012	Valdes, et al.	

EXAMINER **DATE CONSIDERED**

Substitute Disclosure Statement Form (PTO-1449)
* EXAMINER: Initial if reference considered, whether or not citation is in conformance with MPEP 609. Draw line through citation if not in conformance and not considered. Include copy of this form with next communication to applicant.1 Applicant's unique citation designation number (optional) 2 Applicant is to place a check mark here if English language Translation is attached

ALL REFERENCES CONSIDERED EXCEPT WHERE LINED THROUGH. /J.L./

PTO/SB/08 (09-08)
Approved for use through 10/31/2008. OMB 0651-0031
U.S. Patent and Trademark Office; U.S. DEPARTMENT OF COMMERCE
Under the Paperwork Reduction Act of 1995, no persons are required to respond to a collection of information unless it contains a valid OMB control number..

Substitute for form 1449/PTO **INFORMATION DISCLOSURE STATEMENT BY APPLICANT** *(Use as many sheets as necessary)*				*Complete if Known*	
				Application Number	13/925,694
				Filing Date	June 24, 2013
				First Named Inventor	Wesley Scott Harper, et al.
				Art Unit	1631
				Examiner Name	Not yet assigned
Sheet	21	of	26	Attorney Docket No: TS-02-180C01	

FOREIGN PATENT DOCUMENTS						
Examiner Initials*	Cite No.	Foreign Patent Document Country Code-Number-Kind Code	Publication Date MM-DD-YYYY	Name of Patentee or Applicant of cited Document	Pages, Columns, Lines, Where Relevant Passages or RelevantFigures Appear	T[6]
		CA-2468577	06-05-2003	Phemi Inc.		
		CA-2617965	10-18-2011	Bayer HealthCare LLC		
		CA-2626349	09-20-2008	Lifescan, Inc.		
		CA-2678336	05-08-2008	Hoffmann La Roche		
		CA-2728831	07-22-2011	Lifescan, Inc.		
		DE-4401400	07-20-1995	Pfeiffer, Ernst		
		EP-0098592	01-18-1984	Fujisawa Pharmaceutical Co., Ltd.		
		EP-0127958	12-12-1984	Genetics International., Inc.		
		EP-0286118	01-25-1995	Nova Biomedical Corp.		
		EP-0320109	06-14-1989	Medisense, Inc.		
		EP-0353328	02-07-1990	PPG Heillige B.V.		
		EP-0390390	10-03-1990	Associated Universities, Inc. et al.		
		EP-0396788	11-14-1990	PPG Heillige B.V.		
		EP-1048264	11-02-2000	Medtronic, Inc.		
		EP-1725163	12-08-2010	e-San Ltd.		
		EP-2031534	03-04-2009	Lifescan, Inc.		
		WO-1996/025089	08-22-1996	Minimed Inc.		
		WO-1996/035370	11-14-1996	Massachusetts Institute of Technology		
		WO-1998/035053	08-13-1998	E. Heller & Co.		
		WO-1999/027849	06-10-1999	Roche Diagnostics Corp.		
		WO-1999/028736	06-10-1999	Roche Diagnostics Corp.		
		WO-1999/056613	11-11-1999	E. Heller & Co.		
		WO-2000/049940	08-31-2000	Minimed, Inc.		
		WO-2000/059370	10-12-2000	Cambridge University, Technical Services Limited		
		WO-2000/074753	12-14-2000	Minimed, Inc.		
		WO-2000/078992	12-28-2000	TheraSense, Inc.		
		WO-2001/052935	07-26-2001	Medical Research Group, Inc.		
		WO-2001/054753	08-02-2001	Medical Research Group, Inc.		
		WO-2002/016905	02-28-2002	Euro-Celtique, S.A.		
		WO-2002/058537	08-01-2002	TheraSense, Inc.		

EXAMINER **DATE CONSIDERED**

Substitute Disclosure Statement Form (PTO-1449)
* EXAMINER: Initial if reference considered, whether or not citation is in conformance with MPEP 609. Draw line through citation if not in conformance and not considered. Include copy of this form with next communication to applicant.1 Applicant's unique citation designation number (optional) 2 Applicant is to place a check mark here if English language Translation is attached

ALL REFERENCES CONSIDERED EXCEPT WHERE LINED THROUGH. /J.L./

PTO/SB/08 (09-08)
Approved for use through 10/31/2008. OMB 0651-0031
U.S. Patent and Trademark Office; U.S. DEPARTMENT OF COMMERCE
Under the Paperwork Reduction Act of 1995, no persons are required to respond to a collection of information unless it contains a valid OMB control number..

Substitute for form 1449/PTO

INFORMATION DISCLOSURE STATEMENT BY APPLICANT

(Use as many sheets as necessary)

	Complete if Known
Application Number	13/925,694
Filing Date	June 24, 2013
First Named Inventor	Wesley Scott Harper, et al.
Art Unit	1631
Examiner Name	Not yet assigned

Sheet	22	of	26	Attorney Docket No: TS-02-180C01

FOREIGN PATENT DOCUMENTS

Examiner Initials*	Cite No.	Foreign Patent Document Country Code-Number-Kind Code	Publication Date MM-DD-YYYY	Name of Patentee or Applicant of cited Document	Pages, Columns, Lines, Where Relevant Passages or RelevantFigures Appear	T[6]
		WO-2003/057027	07-17-2003	Medtronic MiniMed, Inc.		
		WO-2003/076893	09-18-2003	Sensys Medical, Inc.		
		WO-2003/082091	10-09-2003	Inverness Medical Limited		
		WO-2003/085372	10-16-2003	TheraSense, Inc.		
		WO-2004/060455	07-22-2004	Medtronic Minimed, Inc.		
		WO-2004/061420	07-22-2004	TheraSense, Inc.		
		WO-2005/041766	05-12-2005	TheraSense, Inc.		
		WO-2005/057175	06-23-2005	DexCom, Inc.		
		WO-2005/065538	07-21-2005	Medtronic MiniMed, Inc.		
		WO-2005/065542	07-21-2005	Medtronic Minimed, Inc.		
		WO-2005/089103	09-29-2005	TheraSense, Inc.		
		WO-2006/020212	02-23-2006	Medtronic MiniMed, Inc.		
		WO-2006/024671	03-09-2006	Novo Nordisk A/S		
		WO-2006/072035	07-06-2006	Lifescan Scotland Ltd.		
		WO-2006/079114	07-26-2006	Abbott Diabetes Care Inc.		
		WO-2006/118947	11-06-2006	Abbott Diabetes Care Inc.		
		WO-2007/016399	02-08-2007	Abbott Diabetes Care Inc.		
		WO-2007/019289	02-15-2007	Bayer HealthCare LLC		
		WO-2007/027788	03-08-2007	Abbott Diabetes Care Inc.		
		WO-2007/041069	04-12-2007	Abbott Diabetes Care Inc.		
		WO-2007/041070	04-12-2007	Abbott Diabetes Care Inc.		
		WO-2007/041248	04-12-2007	Abbott Diabetes Care Inc.		
		WO-2007/053832	12-06-2007	Abbott Diabetes Care Inc.		
		WO-2007/056638	05-18-2007	Abbott Diabetes Care Inc.		
		WO-2007/101223	09-07-2007	Abbott Diabetes Care Inc.		
		WO-2007/120363	10-25-2007	Abbott Diabetes Care Inc.		
		WO-2007/126444	11-08-2007	Abbott Diabetes Care Inc.		
		WO-2007/143225	12-13-2007	Abbott Diabetes Care Inc.		
		WO-2008/021913	02-21-2008	Abbott Diabetes Care Inc.		
		WO-2008/042760	04-10-2008	Abbott Diabetes Care Inc.		
		WO-2008/048452	04-24-2008	Medtronic MiniMed, Inc.		
		WO-2008/052374	05-08-2008	Roche Diagnostics GmbH		

EXAMINER **DATE CONSIDERED**

Substitute Disclosure Statement Form (PTO-1449)
* EXAMINER: Initial if reference considered, whether or not citation is in conformance with MPEP 609. Draw line through citation if not in conformance and not considered. Include copy of this form with next communication to applicant.1 Applicant's unique citation designation number (optional) 2 Applicant is to place a check mark here if English language Translation is attached

ALL REFERENCES CONSIDERED EXCEPT WHERE LINED THROUGH. /J.L./

PTO/SB/08 (09-08)
Approved for use through 10/31/2008. OMB 0651-0031
U.S. Patent and Trademark Office; U.S. DEPARTMENT OF COMMERCE
Under the Paperwork Reduction Act of 1995, no persons are required to respond to a collection of information unless it contains a valid OMB control number..

Substitute for form 1449/PTO

INFORMATION DISCLOSURE STATEMENT BY APPLICANT

(Use as many sheets as necessary)

Sheet	23	of	26

Complete if Known	
Application Number	13/925,694
Filing Date	June 24, 2013
First Named Inventor	Wesley Scott Harper, et al.
Art Unit	1631
Examiner Name	Not yet assigned
Attorney Docket No: TS-02-180C01	

FOREIGN PATENT DOCUMENTS

Examiner Initials*	Cite No.	Foreign Patent Document Country Code-Number-Kind Code	Publication Date MM-DD-YYYY	Name of Patentee or Applicant of cited Document	Pages, Columns, Lines, Where Relevant Passages or RelevantFigures Appear	T[6]
		WO-2008/062099	05-29-2008	Koski, Salla		
		WO-2008/086541	07-17-2008	Medtronic Minimed, Inc.		
		WO-2008/128210	10-23-2008	Abbott Diabetes Care Inc.		
		WO-2008/130896	10-30-2008	Abbott Diabetes Care Inc.		
		WO-2008/130897	10-30-2008	Abbott Diabetes Care Inc.		
		WO-2008/130898	10-30-2008	Abbott Diabetes Care Inc.		
		WO-2008/143943	11-27-2008	Abbott Diabetes Care Inc.		
		WO-2008/144445	11-27-2008	iSense Corporation		
		WO-2009/018058	02-05-2009	Abbott Diabetes Care Inc.		
		WO-2009/086216	07-09-2009	Abbott Diabetes Care Inc.		
		WO-2009/096992	08-06-2009	Abbott Diabetes Care Inc.		
		WO-2009/097594	08-06-2009	Abbott Diabetes Care Inc.		
		WO-2010/062898	06-03-2010	University of Virginia		
		WO-2011/000528	01-06-2011	Roche Diagnostics GmbH		
		WO-2011/104616	09-01-2011	Roche Diagnostics GmbH		

EXAMINER **DATE CONSIDERED**

Substitute Disclosure Statement Form (PTO-1449)
* EXAMINER: Initial if reference considered, whether or not citation is in conformance with MPEP 609. Draw line through citation if not in conformance and not considered. Include copy of this form with next communication to applicant.1 Applicant's unique citation designation number (optional) 2 Applicant is to place a check mark here if English language Translation is attached

ALL REFERENCES CONSIDERED EXCEPT WHERE LINED THROUGH. /J.L./

PTO/SB/08 (09-08)
Approved for use through 10/31/2008. OMB 0651-0031
U.S. Patent and Trademark Office; U.S. DEPARTMENT OF COMMERCE
Under the Paperwork Reduction Act of 1995, no persons are required to respond to a collection of information unless it contains a valid OMB control number..

Substitute for form 1449/PTO **INFORMATION DISCLOSURE STATEMENT BY APPLICANT** *(Use as many sheets as necessary)*				*Complete if Known*	
				Application Number	13/925,694
				Filing Date	June 24, 2013
				First Named Inventor	Wesley Scott Harper, et al.
				Art Unit	1631
				Examiner Name	Not yet assigned
Sheet	24	of	26	Attorney Docket No: TS-02-180C01	

NON PATENT LITERATURE DOCUMENTS			
Examiner Initials*	Cite No.	Include name of the author (in CAPITAL LETTERS), title of the article (when appropriate), title of the item (book, magazine, journal, serial, symposium, catalog, etc.), date, page(s), volume-issue number(s), publisher, city and/or country where published.	T[2]
		ARMOUR, J. C., et al., "Application of Chronic Intravascular Blood Glucose Sensor in Dogs", Diabetes, Vol. 39, 1990, pp. 1519-1526.	
		BENNION, N., et al., "Alternate Site Glucose Testing: A Crossover Design", Diabetes Technology & Therapeutics, Vol. 4, No. 1, 2002, pp. 25-33.	
		BLANK, T. B., et al., "Clinical Results From a Non-Invasive Blood Glucose Monitor", Optical Diagnostics and Sensing of Biological Fluids and Glucose and Cholesterol Monitoring II, Proceedings of SPIE, Vol. 4624, 2002, pp. 1-10.	
		BROOKS, S. L., et al., "Development of an On-Line Glucose Sensor for Fermentation Monitoring", Biosensors, Vol. 3, 1987/88, pp. 45-56.	
		CASS, A. E., et al., "Ferrocene-Medicated Enzyme Electrode for Amperometric Determination of Glucose", Analytical Chemistry, Vol. 56, No. 4, 1984, 667-671.	
		CSOREGI, E., et al., "Design and Optimization of a Selective Subcutaneously Implantable Glucose Electrode Based on 'Wired' Glucose Oxidase", Analytical Chemistry, Vol. 67, No. 7, 1995, pp. 1240-1244.	
		EL-KHATIB, F. H, et al., "Adaptive Closed-Loop Control Provides Blood-Glucose Regulation Using Subcutaneous Insulin and Glucagon Infusion in Diabetic Swine", Journal of Diabetes Science and Technology, Vol. 1, No. 2, 2007, pp. 181-192.	
		FELDMAN, B., et al., "A Continuous Glucose Sensor Based on Wired Enzyme™ Technology - Results from a 3-Day Trial in Patients with Type 1 Diabetes", Diabetes Technology & Therapeutics, Vol. 5, No. 5, 2003, pp. 769-779.	
		FELDMAN, B., et al., "Correlation of Glucose Concentrations in Interstitial Fluid and Venous Blood During Periods of Rapid Glucose Change", Abbott Diabetes Care, Inc. Freestyle Navigator Continuous Glucose Monitor Pamphlet, 2004.	
		ISERMANN, R., "Supervision, Fault-Detection and Fault-Diagnosis Methods – An Introduction", Control Engineering Practice, Vol. 5, No. 5, 1997, pp. 639-652.	
		ISERMANN, R., et al., "Trends in the Application of Model-Based Fault Detection and Diagnosis of Technical Processes", Control Engineering Practice, Vol. 5, No. 5, 1997, pp. 709-719.	
		JOHNSON, P. C., "Peripheral Circulation", John Wiley & Sons, 1978, pp. 198.	
		JUNGHEIM, K., et al., "How Rapid Does Glucose Concentration Change in Daily Life of Patients with Type 1 Diabetes?", 2002, pp. 250.	
		JUNGHEIM, K., et al., "Risky Delay of Hypoglycemia Detection by Glucose Monitoring at the Arm", Diabetes Care, Vol. 24, No. 7, 2001, pp. 1303-1304.	
		KAPLAN, S. M., "Wiley Electrical and Electronics Engineering Dictionary", IEEE Press, 2004, pp. 141, 142, 548, 549.	
		LORTZ, J., et al., "What is Bluetooth? We Explain The Newest Short-Range Connectivity Technology", Smart Computing Learning Series, Wireless Computing, Vol. 8, Issue 5, 2002, pp. 72-74.	
		MALIN, S. F., et al., "Noninvasive Prediction of Glucose by Near-Infrared Diffuse Reflectance Spectoscopy", Clinical Chemistry, Vol. 45, No. 9, 1999, pp. 1651-1658.	

EXAMINER **DATE CONSIDERED**

Substitute Disclosure Statement Form (PTO-1449)
* EXAMINER: Initial if reference considered, whether or not citation is in conformance with MPEP 609. Draw line through citation if not in conformance and not considered. Include copy of this form with next communication to applicant.1 Applicant's unique citation designation number (optional) 2 Applicant is to place a check mark here if English language Translation is attached

ALL REFERENCES CONSIDERED EXCEPT WHERE LINED THROUGH. /J.L./

PTO/SB/08 (09-08)
Approved for use through 10/31/2008. OMB 0651-0031
U.S. Patent and Trademark Office; U.S. DEPARTMENT OF COMMERCE
Under the Paperwork Reduction Act of 1995, no persons are required to respond to a collection of information unless it contains a valid OMB control number..

Substitute for form 1449/PTO **INFORMATION DISCLOSURE STATEMENT BY APPLICANT** *(Use as many sheets as necessary)*				*Complete if Known*	
				Application Number	13/925,694
				Filing Date	June 24, 2013
				First Named Inventor	Wesley Scott Harper, et al.
				Art Unit	1631
				Examiner Name	Not yet assigned
Sheet	25	of	26	Attorney Docket No: TS-02-180C01	

NON PATENT LITERATURE DOCUMENTS			
Examiner Initials*	Cite No.	Include name of the author (in CAPITAL LETTERS), title of the article (when appropriate), title of the item (book, magazine, journal, serial, symposium, catalog, etc.), date, page(s), volume-issue number(s), publisher, city and/or country where published.	T[2]
		MCGARRAUGH, G., et al., "Glucose Measurements Using Blood Extracted from the Forearm and the Finger", TheraSense, Inc., 2001, 16 Pages.	
		MCGARRAUGH, G., et al., "Physiological Influences on Off-Finger Glucose Testing", Diabetes Technology & Therapeutics, Vol. 3, No. 3, 2001, pp. 367-376.	
		MCKEAN, B. D., et al., "A Telemetry-Instrumentation System for Chronically Implanted Glucose and Oxygen Sensors", IEEE Transactions on Biomedical Engineering, Vol. 35, No. 7, 1988, pp. 526-532.	
		PICKUP, J., et al., "Implantable Glucose Sensors: Choosing the Appropriate Sensing Strategy", Biosensors, Vol. 3, 1987/88, pp. 335-346.	
		PICKUP, J., et al., "In Vivo Molecular Sensing in Diabetes Mellitus: An Implantable Glucose Sensor with Direct Electron Transfer", Diabetologia, Vol. 32, 1989, pp. 213-217.	
		PISHKO, M. V., et al., "Amperometric Glucose Microelectrodes Prepared Through Immobilization of Glucose Oxidase in Redox Hydrogels", Analytical Chemistry, Vol. 63, No. 20, 1991, pp. 2268-2272.	
		QUINN, C. P., et al., "Kinetics of Glucose Delivery to Subcutaneous Tissue in Rats Measured with 0.3-mm Amperometric Microsensors", The American Physiological Society, 1995, E155-E161.	
		ROE, J. N., et al., "Bloodless Glucose Measurements", Critical Review in Therapeutic Drug Carrier Systems, Vol. 15, Issue 3, 1998, pp. 199-241.	
		SAKAKIDA, M., et al., "Development of Ferrocene-Mediated Needle-Type Glucose Sensor as a Measure of True Subcutaneous Tissue Glucose Concentrations", Artificial Organs Today, Vol. 2, No. 2, 1992, pp. 145-158.	
		SAKAKIDA, M., et al., "Ferrocene-Mediated Needle-Type Glucose Sensor Covered with Newly Designed Biocompatible Membrane", Sensors and Actuators B, Vol. 13-14, 1993, pp. 319-322.	
		SALEHI, C., et al., "A Telemetry-Instrumentation System for Long-Term Implantable Glucose and Oxygen Sensors", Analytical Letters, Vol. 29, No. 13, 1996, pp. 2289-2308.	
		SCHMIDTKE, D. W., et al., "Measurement and Modeling of the Transient Difference Between Blood and Subcutaneous Glucose Concentrations in the Rat After Injection of Insulin", Proceedings of the National Academy of Sciences, Vol. 95, 1998, pp. 294-299.	
		SHAW, G. W., et al., "In Vitro Testing of a Simply Constructed, Highly Stable Glucose Sensor Suitable for Implantation in Diabetic Patients", Biosensors & Bioelectronics, Vol. 6, 1991, pp. 401-406.	
		SHICHIRI, M., et al., "Glycaemic Control in Pancreatectomized Dogs with a Wearable Artificial Endocrine Pancreas", Diabetologia, Vol. 24, 1983, pp. 179-184.	
		SHICHIRI, M., et al., "In Vivo Characteristics of Needle-Type Glucose Sensor - Measurements of Subcutaneous Glucose Concentrations in Human Volunteers", Hormone and Metabolic Research Supplement Series, Vol. 20, 1988, pp. 17-20.	
		SHICHIRI, M., et al., "Membrane Design for Extending the Long-Life of an Implantable Glucose Sensor", Diabetes Nutrition and Metabolism, Vol. 2, 1989, pp. 309-313.	

EXAMINER **DATE CONSIDERED**

Substitute Disclosure Statement Form (PTO-1449)
* EXAMINER: Initial if reference considered, whether or not citation is in conformance with MPEP 609. Draw line through citation if not in conformance and not considered. Include copy of this form with next communication to applicant.1 Applicant's unique citation designation number (optional) 2 Applicant is to place a check mark here if English language Translation is attached

ALL REFERENCES CONSIDERED EXCEPT WHERE LINED THROUGH. /J.L./

PTO/SB/08 (09-08)
Approved for use through 10/31/2008. OMB 0651-0031
U.S. Patent and Trademark Office; U.S. DEPARTMENT OF COMMERCE
Under the Paperwork Reduction Act of 1995, no persons are required to respond to a collection of information unless it contains a valid OMB control number..

Substitute for form 1449/PTO **INFORMATION DISCLOSURE STATEMENT BY APPLICANT** *(Use as many sheets as necessary)*				*Complete if Known*	
				Application Number	13/925,694
				Filing Date	June 24, 2013
				First Named Inventor	Wesley Scott Harper, et al.
				Art Unit	1631
				Examiner Name	Not yet assigned
Sheet	26	of	26	Attorney Docket No: TS-02-180C01	

NON PATENT LITERATURE DOCUMENTS			
Examiner Initials*	Cite No.	Include name of the author (in CAPITAL LETTERS), title of the article (when appropriate), title of the item (book, magazine, journal, serial, symposium, catalog, etc.), date, page(s), volume-issue number(s), publisher, city and/or country where published.	T[2]
		SHICHIRI, M., et al., "Needle-type Glucose Sensor for Wearable Artificial Endocrine Pancreas", Implantable Sensors for Closed-Loop Prosthetic Systems, Chapter 15, 1985, pp. 197-210.	
		SHICHIRI, M., et al., "Telemetry Glucose Monitoring Device With Needle-Type Glucose Sensor: A Useful Tool for Blood Glucose Monitoring in Diabetic Individuals", Diabetes Care, Vol. 9, No. 3, 1986, pp. 298-301.	
		SHICHIRI, M., et al., "Wearable Artificial Endocrine Pancreas With Needle-Type Glucose Sensor", The Lancet, 1982, pp. 1129-1131.	
		SHULTS, M. C., et al., "A Telemetry-Instrumentation System for Monitoring Multiple Subcutaneously Implanted Glucose Sensors", IEEE Transactions on Biomedical Engineering, Vol. 41, No. 10, 1994, pp. 937-942.	
		STERNBERG, R., et al., "Study and Development of Multilayer Needle-Type Enzyme-Based Glucose Microsensors", Biosensors, Vol. 4, 1988, pp. 27-40.	
		THOMPSON, M., et al., "In Vivo Probes: Problems and Perspectives", Clinical Biochemistry, Vol. 19, 1986, pp. 255-261.	
		TURNER, A., et al., "Diabetes Mellitus: Biosensors for Research and Management", Biosensors, Vol. 1, 1985, pp. 85-115.	
		UPDIKE, S. J., et al., "Principles of Long-Term Fully Implanted Sensors with Emphasis on Radiotelemetric Monitoring of Blood Glucose from Inside a Subcutaneous Foreign Body Capsule (FBC)", Biosensors in the Body: Continuous in vivo Monitoring, Chapter 4, 1997, pp. 117-137.	
		VELHO, G., et al., "Strategies for Calibrating a Subcutaneous Glucose Sensor", Biomedica Biochimica Acta, Vol. 48, 1989, pp. 957-964.	
		WILSON, G. S., et al., "Progress Toward the Development of an Implantable Sensor for Glucose", Clinical Chemistry, Vol. 38, No. 9, 1992, pp. 1613-1617.	
		PCT Application No. PCT/US2010/032863, International Preliminary Report on Patentability and Written Opinion of the International Searching Authority mailed November 11, 2011.	
		PCT Application No. PCT/US2010/032863, International Search Report and Written Opinion of the International Searching Authority mailed July 7, 2010.	
		U.S. Patent Application No. 12/769,635, Notice of Allowance March 4, 2013.	
		U.S. Patent Application No. 12/769,635, Office Action May 24, 2012.	
		U.S. Patent Application No. 12/769,635, Office Action November 8, 2012.	

EXAMINER /Jerry Lin/ **DATE CONSIDERED** 12/20/2014

Substitute Disclosure Statement Form (PTO-1449)
* EXAMINER: Initial if reference considered, whether or not citation is in conformance with MPEP 609. Draw line through citation if not in conformance and not considered. Include copy of this form with next communication to applicant.1 Applicant's unique citation designation number (optional) 2 Applicant is to place a check mark here if English language Translation is attached

ALL REFERENCES CONSIDERED EXCEPT WHERE LINED THROUGH. /J.L./

Search Notes	Application/Control No.	Applicant(s)/Patent Under Reexamination
	13925694	HARPER, WESLEY SCOTT
	Examiner	**Art Unit**
	JERRY LIN	1631

CPC- SEARCHED		
Symbol	**Date**	**Examiner**

CPC COMBINATION SETS - SEARCHED		
Symbol	**Date**	**Examiner**

US CLASSIFICATION SEARCHED			
Class	**Subclass**	**Date**	**Examiner**

SEARCH NOTES		
Search Notes	**Date**	**Examiner**
See printout	12/20/2014	JL
Inventor Search in palm	12/20/2014	JL

INTERFERENCE SEARCH			
US Class/ CPC Symbol	**US Subclass / CPC Group**	**Date**	**Examiner**

WEST Search History for Application 12769635

Creation Date: 2014122010:18

Prior Art Searches

Query	DB	Op.	Plur.	Thes.	Date
20090033482.pn. or 20090018424.pn.	PGPB, USPT	OR	YES		05-18-2012
analyte same sensor	PGPB, USPT	OR	YES		02-22-2013
(analyte same sensor) same calibration	PGPB, USPT	OR	YES		02-22-2013
(analyte same sensor same calibration) same (processing or process)	PGPB, USPT	OR	YES		02-22-2013
(analyte same sensor same calibration same (processing or process)) same (output or display or readout)	PGPB, USPT	OR	YES		02-22-2013
(analyte same sensor same calibration same (processing or process) same (output or display or readout)) and (storage or storing or store or retrieve or retrieving)	PGPB, USPT	OR	YES		02-22-2013
(analyte same sensor same calibration same (processing or process) same (output or display or readout)) same (storage or storing or store or retrieve or retrieving)	PGPB, USPT	OR	YES		02-22-2013
(analyte same sensor same calibration same (processing or process) same (output or display or readout) same (storage or storing or store or retrieve or retrieving)) same (disable or disabling)	PGPB, USPT	OR	YES		02-22-2013
(analyte same sensor same calibration same (processing or process) same (output or display or readout) same (storage or storing or store or retrieve or retrieving)) and disabling	PGPB, USPT	OR	YES		02-22-2013
702/19.ccls.	PGPB, USPT	OR	YES		02-22-2013
(702/19.ccls.) and (analyte same sensor)	PGPB, USPT	OR	YES		02-22-2013
(702/19.ccls.) and (analyte same sensor same calibration same (processing or process))	PGPB, USPT	OR	YES		02-22-2013

CERTIFICATE OF TRANSMISSION/MAILING

I hereby certify that this correspondence is being facsimile transmitted to the United States Patent Office, number 1-571-273-8300, or deposited with the United States Postal Service with sufficient postage as first class mail in an envelope, or filed electronically via the EFS-Web System, and addressed to: Mail Stop Amendment, Commissioner for Patents, P.O. Box 1450, Alexandria, VA 22313-1450, on **April 20, 2014**.

/Michael Chen/

Michael Chen

IN THE UNITED STATES PATENT AND TRADEMARK OFFICE

Application No.	:	13/925,694	Confirmation No. 8030
Inventor	:	Wesley Scott Harper	
Filed	:	June 24, 2013	
TC/A.U.	:	1631	
Examiner	:	Lin, Jerry	
Docket No.	:	TS-02-180C01	
Customer No.	:	30349	

Title: METHOD AND SYSTEM FOR PROVIDING REAL TIME ANALYTE SENSOR CALIBRATION WITH RETROSPECTIVE BACKFILL

Mail Stop Amendment
Commissioner for Patents
P.O. Box 1450
Alexandria, VA 22313-1450

PRELIMINARY AMENDMENT

Sir:

Please amend the above-identified application as follows:

The **Listing of Claims** begins on page **2** of this paper.

Remarks/Arguments begin on page **7** of this paper.

This listing of claims will replace all prior versions, and listings, of claims in the application:

Listing of Claims:

1-20. (Cancelled)

21. (New) A method implemented using one or more processors, comprising:

processing sensor data from an analyte sensor of an analyte monitoring system with time corresponding calibration data;

detecting one or more adverse conditions associated with the analyte monitoring system;

disabling output of the sensor data during an adverse condition time period;

storing sensor data received from the analyte sensor during the adverse condition time period;

determining that the one or more detected adverse conditions is no longer present in the analyte monitoring system;

retrieving the sensor data stored during the adverse condition time period when it is determined that the one or more detected adverse conditions is no longer present; and

processing the retrieved sensor data stored during the adverse condition time period.

22. (New) The method of claim 21, further including outputting the processed sensor data stored during the adverse condition time period.

23. (New) The method of claim 21, wherein the one or more detected adverse conditions includes one or more of a sensor instability condition, a calibration failure condition, and a monitoring system failure condition.

24. (New) The method of claim 23, wherein the sensor instability condition includes one or more of an early signal attenuation condition of the analyte sensor, an analyte sensor mis-position error, an analyte sensor communication error, a temperature measurement outside a predetermined range, or a combination thereof.

25. (New) The method of claim 23, wherein the calibration failure condition includes one or more of an analyte level exceeding a predetermined threshold, a rate of change of analyte level exceeding a predetermined threshold, a signal error associated with the reference data, a data unavailability condition, or a combination thereof.

26. (New) The method of claim 21, further including storing the processed sensor data with associated time information based on the analyte level detection time by the analyte sensor.

27. (New) The method of claim 21, wherein the analyte sensor comprises a plurality of electrodes including a working electrode, wherein the working electrode comprises an analyte-responsive enzyme and a mediator, wherein at least one of the analyte-responsive enzyme and the mediator is chemically bonded to a polymer disposed on the working electrode, and wherein at least one of the analyte-responsive enzyme and the mediator is crosslinked with the polymer.

28. (New) A method implemented using one or more processors, comprising:

detecting a condition unsuitable for calibration of an analyte sensor;

disabling output of information associated with an analyte level monitored using the analyte sensor;

storing sensor data received from the analyte sensor during a time period of disabled output of information;

retrieving one or more parameters associated with a successful calibration of the analyte sensor; and

after the one or more parameters associated with successful calibration has been retrieved, processing the sensor data stored during the time period of disabled output of information with the one or more parameters associated with the successful calibration.

29. (New) The method of claim 28, wherein the condition unsuitable for calibration includes one or more of a failure mode of the analyte sensor, sensor data outside a predetermined acceptable range, a rate of change of sensor data above a predetermined level, a requirement for calibration of the analyte sensor, a temperature measurement outside a predetermined range, or any combination thereof.

30. (New) The method of claim 28, wherein the processed sensor data for the time period of disabled information output is displayed substantially immediately upon processing.

31. (New) The method of claim 28, wherein the processed sensor data for the time period of disabled information output is displayed only after waiting a predetermined period of time.

32. (New) The method of claim 28, wherein the analyte sensor comprises a plurality of electrodes including a working electrode, wherein the working electrode comprises an analyte-responsive enzyme and a mediator, wherein at least one of the analyte-responsive enzyme and the mediator is chemically bonded to a polymer disposed on the working electrode, and wherein at least one of the analyte-responsive enzyme and the mediator is crosslinked with the polymer.

33. (New) An apparatus, comprising:

an interface configured to receive sensor data from an analyte sensor;

one or more processors; and

a memory for storing instructions which, when executed by the one or more processors, causes the one or more processors to process stored sensor data, to detect a condition unsuitable for calibration of the analyte sensor for a predetermined time period, to disable displaying of processed sensor data, to store sensor data received during a time period of disabled display, to retrieve one or more parameters associated with a successful calibration event, and after the one or more parameters associated with successful calibration have been retrieved, to process the sensor data stored during the time period of disabled display of sensor data with the one or more parameters associated with the successful calibration.

34. (New) The apparatus of claim 33, wherein the analyte sensor is a glucose sensor.

35. (New) The apparatus of claim 33, wherein the sensor data corresponds to analyte concentration data.

36. (New) The apparatus of claim 33, wherein the memory further includes instructions to process and display the sensor data substantially in real-time.

37. (New) The apparatus of claim 33, wherein the condition unsuitable for calibration includes one or more of a failure mode of a sensor, sensor data outside a predetermined acceptable range, a rate of change of sensor data above a predetermined level, a requirement for calibration of a sensor, a temperature measurement outside a predetermined range, or any combination thereof.

38. (New) The apparatus of claim 33, wherein the memory further includes instructions to display the processed sensor data for the time period of disabled display substantially immediately upon processing the sensor data.

39. (New) The apparatus of claim 33, wherein the memory further includes instructions to display the processed sensor data for the time period of disabled display only after waiting a predetermined period of time.

40. (New) The apparatus of claim 33, wherein the analyte sensor comprises a plurality of electrodes including a working electrode, wherein the working electrode comprises an analyte-responsive enzyme and a mediator, wherein at least one of the analyte-responsive enzyme and the mediator is chemically bonded to a polymer disposed on the working electrode, and wherein at least one of the analyte-responsive enzyme and the mediator is crosslinked with the polymer.

Remarks/Arguments

After entry of this preliminary amendment, claims 21-40 are pending. Claims 21-40 are newly added. Claims 1-20 are cancelled herein without prejudice.

Support for new claims 21-40 can be found throughout the specification and/or figures as originally filed. Applicants respectfully request entry of new claims 21-40.

Applicant respectfully requests the Examiner's early examination of the pending claims in the present application. In the event that the Examiner deems a telephonic or in person discussion would be helpful in advancing the prosecution of the present application, Applicant respectfully requests the Examiner to contact Applicant's representative at (510) 652-6418, x82.

Respectfully submitted,
JACKSON & CO., LLP®

Dated: April 20, 2014

By: /Seong-Kun Oh/

Seong-Kun Oh
Reg. No. 48,210
Attorneys for Applicant

JACKSON & CO., LLP®
6114 La Salle Ave., #507
Oakland, CA 94611-2802

Telephone: 510-652-6418, Ext. 82
Facsimile: 510-652-5691

Customer No.: 30349

Electronic Acknowledgement Receipt

EFS ID:	18808860
Application Number:	13925694
International Application Number:	
Confirmation Number:	8030
Title of Invention:	Method and System for Providing Real Time Analyte Sensor Calibration with Retrospective Backfill
First Named Inventor/Applicant Name:	Wesley Scott Harper
Customer Number:	30349
Filer:	Seong-Kun Oh/Michael Chen
Filer Authorized By:	Seong-Kun Oh
Attorney Docket Number:	TS-02-180C01
Receipt Date:	20-APR-2014
Filing Date:	24-JUN-2013
Time Stamp:	14:55:53
Application Type:	Utility under 35 USC 111(a)

Payment information:

Submitted with Payment	no

File Listing:

Document Number	Document Description	File Name	File Size(Bytes)/ Message Digest	Multi Part /.zip	Pages (if appl.)
1	Transmittal Letter	TS-02-180C01-General-Transmittal.pdf	111233 cee2081b12f3ad6b480f9eff6adb5c259db48f87	no	2

Warnings:

Information:

2		TS-02-180C01-Preliminary-Amendment-as-filed.pdf	110313 5aa1d09c5c05a59ef1e34fd8bb2ceded67000803	yes	7

Multipart Description/PDF files in .zip description		
Document Description	**Start**	**End**
Preliminary Amendment	1	1
Claims	2	6
Applicant Arguments/Remarks Made in an Amendment	7	7

Warnings:	
Information:	
Total Files Size (in bytes):	221546

This Acknowledgement Receipt evidences receipt on the noted date by the USPTO of the indicated documents, characterized by the applicant, and including page counts, where applicable. It serves as evidence of receipt similar to a Post Card, as described in MPEP 503.

New Applications Under 35 U.S.C. 111
If a new application is being filed and the application includes the necessary components for a filing date (see 37 CFR 1.53(b)-(d) and MPEP 506), a Filing Receipt (37 CFR 1.54) will be issued in due course and the date shown on this Acknowledgement Receipt will establish the filing date of the application.

National Stage of an International Application under 35 U.S.C. 371
If a timely submission to enter the national stage of an international application is compliant with the conditions of 35 U.S.C. 371 and other applicable requirements a Form PCT/DO/EO/903 indicating acceptance of the application as a national stage submission under 35 U.S.C. 371 will be issued in addition to the Filing Receipt, in due course.

New International Application Filed with the USPTO as a Receiving Office
If a new international application is being filed and the international application includes the necessary components for an international filing date (see PCT Article 11 and MPEP 1810), a Notification of the International Application Number and of the International Filing Date (Form PCT/RO/105) will be issued in due course, subject to prescriptions concerning national security, and the date shown on this Acknowledgement Receipt will establish the international filing date of the application.

CERTIFICATE OF TRANSMISSION/MAILING

I hereby certify that this correspondence is being facsimile transmitted to the United States Patent Office, number 1-571-273-8300, or deposited with the United States Postal Service with sufficient postage as first class mail in an envelope, or filed electronically via the EFS-Web System, and addressed to: Mail Stop AMENDMENT, Commissioner for Patents, P.O. Box 1450, Alexandria, VA 22313-1450, on **April 20, 2014**.

/Michael Chen/
Michael Chen

IN THE UNITED STATES PATENT AND TRADEMARK OFFICE

Application No.	:	13/925,694	Confirmation No.	8030
Inventor	:	Wesley Scott Harper		
Filed	:	June 24, 2013		
TC/A.U.	:	1631		
Examiner	:	Lin, Jerry		
Docket No.	:	TS-02-180C01		
Customer No.	:	30349		

Title: METHOD AND SYSTEM FOR PROVIDING REAL TIME ANALYTE SENSOR CALIBRATION WITH RETROSPECTIVE BACKFILL

Mail Stop AMENDMENT
Commissioner for Patents
P.O. Box 1450
Alexandria, VA 22313-1450

TRANSMITTAL

Sir:

Enclosed please find the following:

1. Transmittal (In Duplicate);
2. Preliminary Amendment (7 Pages);
3. Certificate of Transmission (In Duplicate);
4. Deposit Account Authorization (In Duplicate);

Claim Fee Calculation:

	Claims After Amendment	Previously Paid For	Present Extra	Rate ($)	Additional Fee ($)
Total	**20**	- **20**	= **0**	x $80	**$0**
Independent	**3**	- **3**	= **0**	x $420	**$0**

The Commissioner is authorized to charge any deficiencies in fees and credit any overpayment of fees to Deposit Account No. **50-2019**. A duplicate of this transmittal is enclosed.

Respectfully submitted,
JACKSON & CO., LLP®

Dated: April 20, 2014

By: /Seong-Kun Oh/
Seong-Kun Oh
Reg. No. 48,210
Attorneys for Applicant(s)

JACKSON & CO., LLP®
6114 La Salle Ave., #507
Oakland, CA 94611-2802
Customer No.: 30349

CERTIFICATE OF TRANSMISSION/MAILING

I hereby certify that this correspondence is being facsimile transmitted to the United States Patent Office, number 1-571-273-8300, or deposited with the United States Postal Service with sufficient postage as first class mail in an envelope, or filed electronically via the EFS-Web System, and addressed to: Mail Stop AMENDMENT, Commissioner for Patents, P.O. Box 1450, Alexandria, VA 22313-1450, on **April 20, 2014**.

/Michael Chen/
Michael Chen

IN THE UNITED STATES PATENT AND TRADEMARK OFFICE

Application No. : 13/925,694 Confirmation No. 8030
Inventor : Wesley Scott Harper
Filed : June 24, 2013
TC/A.U. : 1631
Examiner : Lin, Jerry
Docket No. : TS-02-180C01
Customer No. : 30349

Title: METHOD AND SYSTEM FOR PROVIDING REAL TIME ANALYTE SENSOR CALIBRATION WITH RETROSPECTIVE BACKFILL

Mail Stop AMENDMENT
Commissioner for Patents
P.O. Box 1450
Alexandria, VA 22313-1450

TRANSMITTAL

Sir:

Enclosed please find the following:

1. Transmittal (In Duplicate);
2. Preliminary Amendment (7 Pages);
3. Certificate of Transmission (In Duplicate);
4. Deposit Account Authorization (In Duplicate);

Claim Fee Calculation:

	Claims After Amendment	Previously Paid For	Present Extra	Rate ($)	Additional Fee ($)
Total	**20**	- **20**	= **0**	x $80	**$0**
Independent	**3**	- **3**	= **0**	x $420	**$0**

The Commissioner is authorized to charge any deficiencies in fees and credit any overpayment of fees to Deposit Account No. **50-2019**. A duplicate of this transmittal is enclosed.

Respectfully submitted,
JACKSON & CO., LLP®

Dated: April 20, 2014

By: /Seong-Kun Oh/
Seong-Kun Oh
Reg. No. 48,210
Attorneys for Applicant(s)

JACKSON & CO., LLP®
6114 La Salle Ave., #507
Oakland, CA 94611-2802
Customer No.: 30349

PTO/SB/06 (09-11)
Approved for use through 1/31/2014. OMB 0651-0032
U.S. Patent and Trademark Office; U.S. DEPARTMENT OF COMMERCE
Under the Paperwork Reduction Act of 1995, no persons are required to respond to a collection of information unless it displays a valid OMB control number.

PATENT APPLICATION FEE DETERMINATION RECORD

Substitute for Form PTO-875

Application or Docket Number	Filing Date	
13/925,694	06/24/2013	☐ To be Mailed

ENTITY: ☒ LARGE ☐ SMALL ☐ MICRO

APPLICATION AS FILED – PART I

FOR	(Column 1) NUMBER FILED	(Column 2) NUMBER EXTRA	RATE ($)	FEE ($)
☐ BASIC FEE (37 CFR 1.16(a), (b), or (c))	N/A	N/A	N/A	
☐ SEARCH FEE (37 CFR 1.16(k), (i), or (m))	N/A	N/A	N/A	
☐ EXAMINATION FEE (37 CFR 1.16(o), (p), or (q))	N/A	N/A	N/A	
TOTAL CLAIMS (37 CFR 1.16(i))	minus 20 =	*	x $ =	
INDEPENDENT CLAIMS (37 CFR 1.16(h))	minus 3 =	*	x $ =	
☐ APPLICATION SIZE FEE (37 CFR 1.16(s))	If the specification and drawings exceed 100 sheets of paper, the application size fee due is $310 ($155 for small entity) for each additional 50 sheets or fraction thereof. See 35 U.S.C. 41(a)(1)(G) and 37 CFR 1.16(s).			
☐ MULTIPLE DEPENDENT CLAIM PRESENT (37 CFR 1.16(j))				
* If the difference in column 1 is less than zero, enter "0" in column 2.			TOTAL	

APPLICATION AS AMENDED – PART II

AMENDMENT

04/20/2014	(Column 1) CLAIMS REMAINING AFTER AMENDMENT		(Column 2) HIGHEST NUMBER PREVIOUSLY PAID FOR	(Column 3) PRESENT EXTRA	RATE ($)	ADDITIONAL FEE ($)
Total (37 CFR 1.16(i))	* 20	Minus	** 20	= 0	x $80 =	0
Independent (37 CFR 1.16(h))	* 3	Minus	***3	= 0	x $420 =	0
☐ Application Size Fee (37 CFR 1.16(s))						
☐ FIRST PRESENTATION OF MULTIPLE DEPENDENT CLAIM (37 CFR 1.16(j))						
					TOTAL ADD'L FEE	0

AMENDMENT

	(Column 1) CLAIMS REMAINING AFTER AMENDMENT		(Column 2) HIGHEST NUMBER PREVIOUSLY PAID FOR	(Column 3) PRESENT EXTRA	RATE ($)	ADDITIONAL FEE ($)
Total (37 CFR 1.16(i))	*	Minus	**	=	x $ =	
Independent (37 CFR 1.16(h))	*	Minus	***	=	x $ =	
☐ Application Size Fee (37 CFR 1.16(s))						
☐ FIRST PRESENTATION OF MULTIPLE DEPENDENT CLAIM (37 CFR 1.16(j))						
					TOTAL ADD'L FEE	

* If the entry in column 1 is less than the entry in column 2, write "0" in column 3.
** If the "Highest Number Previously Paid For" IN THIS SPACE is less than 20, enter "20".
*** If the "Highest Number Previously Paid For" IN THIS SPACE is less than 3, enter "3".
The "Highest Number Previously Paid For" (Total or Independent) is the highest number found in the appropriate box in column 1.

LIE
/DEANNA RORIE/

This collection of information is required by 37 CFR 1.16. The information is required to obtain or retain a benefit by the public which is to file (and by the USPTO to process) an application. Confidentiality is governed by 35 U.S.C. 122 and 37 CFR 1.14. This collection is estimated to take 12 minutes to complete, including gathering, preparing, and submitting the completed application form to the USPTO. Time will vary depending upon the individual case. Any comments on the amount of time you require to complete this form and/or suggestions for reducing this burden, should be sent to the Chief Information Officer, U.S. Patent and Trademark Office, U.S. Department of Commerce, P.O. Box 1450, Alexandria, VA 22313-1450. DO NOT SEND FEES OR COMPLETED FORMS TO THIS ADDRESS. **SEND TO: Commissioner for Patents, P.O. Box 1450, Alexandria, VA 22313-1450.**
If you need assistance in completing the form, call 1-800-PTO-9199 and select option 2.

UNITED STATES PATENT AND TRADEMARK OFFICE

UNITED STATES DEPARTMENT OF COMMERCE
United States Patent and Trademark Office
Address: COMMISSIONER FOR PATENTS
P.O. Box 1450
Alexandria, Virginia 22313-1450
www.uspto.gov

APPLICATION NUMBER	FILING OR 371(C) DATE	FIRST NAMED APPLICANT	ATTY. DOCKET NO./TITLE
13/925,694	06/24/2013	Wesley Scott Harper	TS-02-180C01

CONFIRMATION NO. 8030

PUBLICATION NOTICE

OC000000064583059

30349
JACKSON & CO., LLP
6114 LA SALLE AVENUE
#507
OAKLAND, CA 94611-2802

Title: Method and System for Providing Real Time Analyte Sensor Calibration with Retrospective Backfill

Publication No.US-2013-0282302-A1
Publication Date:10/24/2013

NOTICE OF PUBLICATION OF APPLICATION

The above-identified application will be electronically published as a patent application publication pursuant to 37 CFR 1.211, et seq. The patent application publication number and publication date are set forth above.

The publication may be accessed through the USPTO's publically available Searchable Databases via the Internet at www.uspto.gov. The direct link to access the publication is currently http://www.uspto.gov/patft/.

The publication process established by the Office does not provide for mailing a copy of the publication to applicant. A copy of the publication may be obtained from the Office upon payment of the appropriate fee set forth in 37 CFR 1.19(a)(1). Orders for copies of patent application publications are handled by the USPTO's Office of Public Records. The Office of Public Records can be reached by telephone at (703) 308-9726 or (800) 972-6382, by facsimile at (703) 305-8759, by mail addressed to the United States Patent and Trademark Office, Office of Public Records, Alexandria, VA 22313-1450 or via the Internet.

In addition, information on the status of the application, including the mailing date of Office actions and the dates of receipt of correspondence filed in the Office, may also be accessed via the Internet through the Patent Electronic Business Center at www.uspto.gov using the public side of the Patent Application Information and Retrieval (PAIR) system. The direct link to access this status information is currently http://pair.uspto.gov/. Prior to publication, such status information is confidential and may only be obtained by applicant using the private side of PAIR.

Further assistance in electronically accessing the publication, or about PAIR, is available by calling the Patent Electronic Business Center at 1-866-217-9197.

Office of Data Managment, Application Assistance Unit (571) 272-4000, or (571) 272-4200, or 1-888-786-0101

Under the Paperwork Reduction Act of 1995, no persons are required to respond to a collection of information unless it contains a valid OMB control number..

Substitute for form 1449/PTO **INFORMATION DISCLOSURE STATEMENT BY APPLICANT** *(Use as many sheets as necessary)*				*Complete if Known*	
				Application Number	13/925,694
				Filing Date	June 24, 2013
				First Named Inventor	Wesley Scott Harper, et al.
				Art Unit	1631
				Examiner Name	Not yet assigned
Sheet	1	of	26	Attorney Docket No: TS-02-180C01	

US PATENT DOCUMENTS					
Examiner Initials*	Cite No.	Document Number Number-Kind Code	Publication Date MM-DD-YYYY	Name of Patentee or Applicant of Cited Document	Pages, Columns, Lines, Where Relevant Passages or Relevant Figures Appear
		US-3,581,062	05-21-1971	Aston	
		US-3,926,760	12-16-1975	Allen, et al.	
		US-3,949,388	04-06-1976	Fuller	
		US-4,036,749	07-19-1977	Anderson	
		US-4,055,175	10-25-1977	Clemens, et al.	
		US-4,129,128	12-12-1978	McFarlane	
		US-4,245,634	01-20-1981	Albisser, et al.	
		US-4,327,725	05-04-1982	Cortese, et al.	
		US-4,344,438	08-17-1982	Schultz	
		US-4,349,728	09-14-1982	Phillips, et al.	
		US-4,373,527	02-15-1983	Fischell	
		US-4,392,849	07-12-1983	Petre, et al.	
		US-4,425,920	01-17-1984	Bourland, et al.	
		US-4,462,048	07-24-1984	Ross	
		US-4,478,976	10-23-1984	Goertz, et al.	
		US-4,494,950	01-22-1985	Fischell	
		US-4,509,531	04-09-1985	Ward	
		US-4,527,240	07-02-1985	Kvitash	
		US-4,538,616	09-03-1985	Rogoff	
		US-4,619,793	10-28-1986	Lee	
		US-4,671,288	06-09-1987	Gough	
		US-4,703,756	11-03-1987	Gough, et al.	
		US-4,731,726	03-15-1988	Allen, III	
		US-4,749,985	06-07-1988	Corsberg	
		US-4,757,022	07-12-1988	Shults, et al.	
		US-4,777,953	10-18-1988	Ash, et al.	
		US-4,779,618	10-25-1988	Mund, et al.	
		US-4,854,322	08-08-1989	Ash, et al.	
		US-4,871,351	10-03-1989	Feingold	
		US-4,890,620	01-02-1990	Gough	
		US-4,925,268	05-15-1990	Iyer, et al.	
		US-4,953,552	09-04-1990	DeMarzo	
		US-4,986,271	01-22-1991	Wilkins	
		US-4,995,402	02-26-1991	Smith, et al.	
		US-5,000,180	03-19-1991	Kuypers, et al.	
		US-5,002,054	03-26-1991	Ash, et al.	
		US-5,019,974	05-28-1991	Beckers	
		US-5,050,612	09-24-1991	Matsumura	
		US-5,055,171	10-08-1991	Peck	
		US-5,068,536	11-26-1991	Rosenthal	

EXAMINER **DATE CONSIDERED**

Substitute Disclosure Statement Form (PTO-1449)
* EXAMINER: Initial if reference considered, whether or not citation is in conformance with MPEP 609. Draw line through citation if not in conformance and not considered. Include copy of this form with next communication to applicant.1 Applicant's unique citation designation number (optional) 2 Applicant is to place a check mark here if English language Translation is attached

Under the Paperwork Reduction Act of 1995, no persons are required to respond to a collection of information unless it contains a valid OMB control number..

Substitute for form 1449/PTO				Complete if Known	
INFORMATION DISCLOSURE STATEMENT BY APPLICANT				**Application Number**	13/925,694
				Filing Date	June 24, 2013
				First Named Inventor	Wesley Scott Harper, et al.
(Use as many sheets as necessary)				**Art Unit**	1631
				Examiner Name	Not yet assigned
Sheet	2	of	26	Attorney Docket No: TS-02-180C01	

US PATENT DOCUMENTS					
Examiner Initials*	Cite No.	Document Number Number-Kind Code	Publication Date MM-DD-YYYY	Name of Patentee or Applicant of Cited Document	Pages, Columns, Lines, Where Relevant Passages or Relevant Figures Appear
		US-5,077,476	12-31-1991	Rosenthal	
		US-5,082,550	01-21-1992	Rishpon, et al.	
		US-5,106,365	04-21-1992	Hernandez	
		US-5,122,925	06-16-1992	Inpyn	
		US-5,165,407	11-24-1992	Wilson, et al.	
		US-5,202,261	04-13-1993	Musho, et al.	
		US-5,210,778	05-11-1993	Massart	
		US-5,231,988	08-03-1993	Wernicke, et al.	
		US-5,246,867	09-21-1993	Lakowicz, et al.	
		US-5,262,035	11-16-1993	Gregg, et al.	
		US-5,262,305	11-16-1993	Heller, et al.	
		US-5,264,104	11-23-1993	Gregg, et al.	
		US-5,264,105	11-23-1993	Gregg, et al.	
		US-5,279,294	01-18-1994	Anderson, et al.	
		US-5,285,792	02-15-1994	Sjoquist, et al.	
		US-5,293,877	03-15-1994	O'Hara, et al.	
		US-5,299,571	04-05-1994	Mastrototaro	
		US-5,320,725	06-14-1994	Gregg, et al.	
		US-5,322,063	06-21-1994	Allen, et al.	
		US-5,328,460	07-12-1994	Lord, et al.	
		US-5,340,722	08-23-1994	Wolfbeis, et al.	
		US-5,342,789	08-30-1994	Chick, et al.	
		US-5,356,786	10-18-1994	Heller, et al.	
		US-5,360,404	11-01-1994	Novacek, et al.	
		US-5,372,427	12-13-1994	Padovani, et al.	
		US-5,379,238	01-03-1995	Stark	
		US-5,384,547	01-24-1995	Lynk, et al.	
		US-5,390,671	02-21-1995	Lord, et al.	
		US-5,391,250	02-21-1995	Cheney, II, et al.	
		US-5,408,999	04-25-1995	Singh, et al.	
		US-5,411,647	05-02-1995	Johnson, et al.	
		US-5,425,868	06-20-1995	Pedersen	
		US-5,429,602	07-04-1995	Hauser	
		US-5,431,160	07-11-1995	Wilkins	
		US-5,431,921	07-11-1995	Thombre	
		US-5,462,645	10-31-1995	Albery, et al.	
		US-5,497,772	03-12-1996	Schulman, et al.	
		US-5,507,288	04-16-1996	Bocker, et al.	
		US-5,509,410	04-23-1996	Hill, et al.	
		US-5,514,718	05-07-1996	Lewis, et al.	

EXAMINER **DATE CONSIDERED**

Substitute Disclosure Statement Form (PTO-1449)
* EXAMINER: Initial if reference considered, whether or not citation is in conformance with MPEP 609. Draw line through citation if not in conformance and not considered. Include copy of this form with next communication to applicant.1 Applicant's unique citation designation number (optional) 2 Applicant is to place a check mark here if English language Translation is attached

Under the Paperwork Reduction Act of 1995, no persons are required to respond to a collection of information unless it contains a valid OMB control number..

Substitute for form 1449/PTO **INFORMATION DISCLOSURE STATEMENT BY APPLICANT** *(Use as many sheets as necessary)*				*Complete if Known*	
				Application Number	13/925,694
				Filing Date	June 24, 2013
				First Named Inventor	Wesley Scott Harper, et al.
				Art Unit	1631
				Examiner Name	Not yet assigned
Sheet	3	of	26	Attorney Docket No: TS-02-180C01	

US PATENT DOCUMENTS					
Examiner Initials*	Cite No.	Document Number Number-Kind Code	Publication Date MM-DD-YYYY	Name of Patentee or Applicant of Cited Document	Pages, Columns, Lines, Where Relevant Passages or Relevant Figures Appear
		US-5,531,878	07-02-1996	Vadgama, et al.	
		US-5,552,997	09-03-1996	Massart	
		US-5,568,400	10-22-1996	Stark, et al.	
		US-5,568,806	10-29-1996	Cheney, II, et al.	
		US-5,569,186	10-29-1996	Lord, et al.	
		US-5,582,184	12-10-1996	Erickson, et al.	
		US-5,586,553	12-24-1996	Halili, et al.	
		US-5,593,852	01-14-1997	Heller, et al.	
		US-5,609,575	03-11-1997	Larson, et al.	
		US-5,628,310	05-13-1997	Rao, et al.	
		US-5,653,239	08-05-1997	Pompei, et al.	
		US-5,660,163	08-26-1997	Schulman, et al.	
		US-5,665,222	09-09-1997	Heller, et al.	
		US-5,711,001	01-20-1998	Bussan, et al.	
		US-5,711,861	01-27-1998	Ward, et al.	
		US-5,733,259	03-31-1998	Valcke, et al.	
		US-5,772,586	06-30-1998	Heinonen, et al.	
		US-5,791,344	08-11-1998	Schulman, et al.	
		US-5,899,855	05-04-1999	Brown	
		US-5,925,021	07-20-1999	Castellano, et al.	
		US-5,935,224	08-10-1999	Svancarek, et al.	
		US-5,942,979	08-24-1999	Luppino	
		US-5,957,854	09-28-1999	Besson, et al.	
		US-5,964,993	10-12-1999	Blubaugh, Jr., et al.	
		US-5,965,380	10-12-1999	Heller, et al.	
		US-5,971,922	10-26-1999	Arita, et al.	
		US-5,995,860	11-30-1999	Sun, et al.	
		US-6,001,067	12-14-1999	Shults, et al.	
		US-6,024,699	02-15-2000	Surwit, et al.	
		US-6,049,727	04-11-2000	Crothall	
		US-6,083,710	07-04-2000	Heller, et al.	
		US-6,088,608	07-11-2000	Schulman, et al.	
		US-6,091,976	07-18-2000	Pfeiffer, et al.	
		US-6,093,172	07-25-2000	Funderburk, et al.	
		US-6,103,033	08-15-2000	Say, et al.	
		US-6,117,290	09-12-2000	Say, et al.	
		US-6,119,028	09-12-2000	Schulman, et al.	
		US-6,120,676	09-19-2000	Heller, et al.	
		US-6,121,009	09-19-2000	Heller, et al.	
		US-6,121,611	09-19-2000	Lindsay, et al.	

EXAMINER **DATE CONSIDERED**

Substitute Disclosure Statement Form (PTO-1449)
* EXAMINER: Initial if reference considered, whether or not citation is in conformance with MPEP 609. Draw line through citation if not in conformance and not considered. Include copy of this form with next communication to applicant.1 Applicant's unique citation designation number (optional) 2 Applicant is to place a check mark here if English language Translation is attached

Under the Paperwork Reduction Act of 1995, no persons are required to respond to a collection of information unless it contains a valid OMB control number..

Substitute for form 1449/PTO **INFORMATION DISCLOSURE STATEMENT BY APPLICANT** *(Use as many sheets as necessary)*				*Complete if Known*	
				Application Number	13/925,694
				Filing Date	June 24, 2013
				First Named Inventor	Wesley Scott Harper, et al.
				Art Unit	1631
				Examiner Name	Not yet assigned
Sheet	4	of	26	Attorney Docket No: TS-02-180C01	

US PATENT DOCUMENTS					
Examiner Initials*	Cite No.	Document Number Number-Kind Code	Publication Date MM-DD-YYYY	Name of Patentee or Applicant of Cited Document	Pages, Columns, Lines, Where Relevant Passages or Relevant Figures Appear
		US-6,122,351	09-19-2000	Schlueter, Jr., et al.	
		US-6,134,461	10-17-2000	Say, et al.	
		US-6,143,164	11-07-2000	Heller, et al.	
		US-6,162,611	12-19-2000	Heller, et al.	
		US-6,175,752	01-16-2001	Say, et al.	
		US-6,200,265	03-13-2001	Walsh, et al.	
		US-6,212,416	04-03-2001	Ward, et al.	
		US-6,219,574	04-17-2001	Cormier, et al.	
		US-6,233,471	05-15-2001	Berner, et al.	
		US-6,248,067	06-19-2001	Causey, III, et al.	
		US-6,275,717	08-14-2001	Gross, et al.	
		US-6,284,478	09-04-2001	Heller, et al.	
		US-6,293,925	09-25-2001	Safabash, et al.	
		US-6,295,506	09-25-2001	Heinonen, et al.	
		US-6,306,104	10-23-2001	Cunningham, et al.	
		US-6,309,884	10-30-2001	Cooper, et al.	
		US-6,329,161	12-11-2001	Heller, et al.	
		US-6,360,888	03-26-2002	McIvor, et al.	
		US-6,366,794	04-02-2002	Moussy, et al.	
		US-6,377,828	04-23-2002	Chaiken, et al.	
		US-6,379,301	04-30-2002	Worthington, et al.	
		US-6,387,048	05-14-2002	Schulman, et al.	
		US-6,424,847	07-23-2002	Mastrototaro, et al.	
		US-6,427,088	07-30-2002	Bowman IV, et al.	
		US-6,440,068	08-27-2002	Brown, et al.	
		US-6,478,736	11-12-2002	Mault	
		US-6,484,046	11-19-2002	Say, et al.	
		US-6,514,718	02-04-2003	Heller, et al.	
		US-6,544,212	04-08-2003	Galley, et al.	
		US-6,546,268	04-08-2003	Ishikawa, et al.	
		US-6,551,494	04-22-2003	Heller, et al.	
		US-6,558,321	05-06-2003	Burd, et al.	
		US-6,558,351	05-06-2003	Steil, et al.	
		US-6,560,471	05-06-2003	Heller, et al.	
		US-6,561,978	05-13-2003	Conn, et al.	
		US-6,562,001	05-13-2003	Lebel, et al.	
		US-6,564,105	05-13-2003	Starkweather, et al.	
		US-6,565,509	05-20-2003	Say, et al.	
		US-6,571,128	05-27-2003	Lebel, et al.	
		US-6,572,545	06-03-2003	Knobbe, et al.	

EXAMINER **DATE CONSIDERED**

Substitute Disclosure Statement Form (PTO-1449)
* EXAMINER: Initial if reference considered, whether or not citation is in conformance with MPEP 609. Draw line through citation if not in conformance and not considered. Include copy of this form with next communication to applicant.1 Applicant's unique citation designation number (optional) 2 Applicant is to place a check mark here if English language Translation is attached

Under the Paperwork Reduction Act of 1995, no persons are required to respond to a collection of information unless it contains a valid OMB control number..

Substitute for form 1449/PTO

INFORMATION DISCLOSURE STATEMENT BY APPLICANT

(Use as many sheets as necessary)

Sheet	5	of	26

Complete if Known	
Application Number	13/925,694
Filing Date	June 24, 2013
First Named Inventor	Wesley Scott Harper, et al.
Art Unit	1631
Examiner Name	Not yet assigned
Attorney Docket No: TS-02-180C01	

US PATENT DOCUMENTS

Examiner Initials*	Cite No.	Document Number Number-Kind Code	Publication Date MM-DD-YYYY	Name of Patentee or Applicant of Cited Document	Pages, Columns, Lines, Where Relevant Passages or Relevant Figures Appear
		US-6,576,101	06-10-2003	Heller, et al.	
		US-6,577,899	06-10-2003	Lebel, et al.	
		US-6,579,690	06-17-2003	Bonnecaze, et al.	
		US-6,585,644	07-01-2003	Lebel, et al.	
		US-6,591,125	07-08-2003	Buse, et al.	
		US-6,595,919	07-22-2003	Berner, et al.	
		US-6,605,200	08-12-2003	Mao, et al.	
		US-6,605,201	08-12-2003	Mao, et al.	
		US-6,607,509	08-19-2003	Bobroff, et al.	
		US-6,610,012	08-26-2003	Mault	
		US-6,633,772	10-14-2003	Ford, et al.	
		US-6,635,014	10-21-2003	Starkweather, et al.	
		US-6,648,821	11-18-2003	Lebel, et al.	
		US-6,654,625	11-25-2003	Say, et al.	
		US-6,659,948	12-09-2003	Lebel, et al.	
		US-6,668,196	12-23-2003	Villegas, et al.	
		US-6,675,030	01-06-2004	Ciuczak, et al.	
		US-6,676,816	01-13-2004	Mao, et al.	
		US-6,687,546	02-03-2004	Lebel, et al.	
		US-6,689,056	02-10-2004	Kilcoyne, et al.	
		US-6,694,191	02-17-2004	Starkweather, et al.	
		US-6,695,860	02-24-2004	Ward, et al.	
		US-6,698,269	03-02-2004	Baber, et al.	
		US-6,702,857	03-09-2004	Brauker, et al.	
		US-6,733,446	05-11-2004	Lebel, et al.	
		US-6,740,075	05-25-2004	Lebel, et al.	
		US-6,741,877	05-25-2004	Shults, et al.	
		US-6,746,582	06-08-2004	Heller, et al.	
		US-6,758,810	07-06-2004	Lebel, et al.	
		US-6,770,030	08-03-2004	Schaupp, et al.	
		US-6,790,178	09-14-2004	Mault, et al.	
		US-6,809,653	10-26-2004	Mann, et al.	
		US-6,810,290	10-26-2004	Lebel, et al.	
		US-6,811,533	11-02-2004	Lebel, et al.	
		US-6,811,534	11-02-2004	Bowman IV, et al.	
		US-6,813,519	11-02-2004	Lebel, et al.	
		US-6,850,790	02-01-2005	Berner, et al.	
		US-6,862,465	03-01-2005	Shults, et al.	
		US-6,865,407	03-08-2005	Kimball, et al	
		US-6,873,268	03-29-2005	Lebel, et al.	

EXAMINER **DATE CONSIDERED**

Substitute Disclosure Statement Form (PTO-1449)
* EXAMINER: Initial if reference considered, whether or not citation is in conformance with MPEP 609. Draw line through citation if not in conformance and not considered. Include copy of this form with next communication to applicant.1 Applicant's unique citation designation number (optional) 2 Applicant is to place a check mark here if English language Translation is attached

Under the Paperwork Reduction Act of 1995, no persons are required to respond to a collection of information unless it contains a valid OMB control number..

Substitute for form 1449/PTO **INFORMATION DISCLOSURE STATEMENT BY APPLICANT** *(Use as many sheets as necessary)*				*Complete if Known*	
				Application Number	13/925,694
				Filing Date	June 24, 2013
				First Named Inventor	Wesley Scott Harper, et al.
				Art Unit	1631
				Examiner Name	Not yet assigned
Sheet	6	of	26	Attorney Docket No: TS-02-180C01	

US PATENT DOCUMENTS					
Examiner Initials*	Cite No.	Document Number Number-Kind Code	Publication Date MM-DD-YYYY	Name of Patentee or Applicant of Cited Document	Pages, Columns, Lines, Where Relevant Passages or Relevant Figures Appear
		US-6,881,551	04-19-2005	Heller, et al.	
		US-6,882,940	04-19-2005	Potts, et al.	
		US-6,885,883	04-26-2005	Parris, et al.	
		US-6,892,085	05-10-2005	McIvor, et al.	
		US-6,895,263	05-17-2005	Shin, et al.	
		US-6,895,265	05-17-2005	Silver	
		US-6,931,327	08-16-2005	Goode Jr., et al.	
		US-6,932,894	08-23-2005	Mao, et al.	
		US-6,936,006	08-30-2005	Sabra	
		US-6,950,708	09-27-2005	Bowman IV, et al.	
		US-6,958,705	10-25-2005	Lebel, et al.	
		US-6,968,294	11-22-2005	Gutta, et al.	
		US-6,971,274	12-06-2005	Olin	
		US-6,974,437	12-13-2005	Lebel, et al.	
		US-6,983,176	01-03-2006	Gardner, et al.	
		US-6,990,366	01-24-2006	Say, et al.	
		US-6,997,907	02-14-2006	Safabash, et al.	
		US-6,998,247	02-14-2006	Monfre, et al.	
		US-7,003,336	02-21-2006	Holker, et al.	
		US-7,003,340	02-21-2006	Say, et al.	
		US-7,003,341	02-21-2006	Say, et al.	
		US-7,022,072	04-04-2006	Fox, et al.	
		US-7,024,245	04-04-2006	Lebel, et al.	
		US-7,025,425	04-11-2006	Kovatchev, et al.	
		US-7,029,444	04-18-2006	Shin, et al.	
		US-7,041,068	05-09-2006	Freeman, et al.	
		US-7,043,287	05-09-2006	Khalil, et al.	
		US-7,043,287	05-09-2006	Khalil, et al.	
		US-7,052,483	05-30-2006	Wojcik	
		US-7,056,302	06-06-2006	Douglas	
		US-7,074,307	07-11-2006	Simpson, et al.	
		US-7,081,195	07-25-2006	Simpson, et al.	
		US-7,098,803	08-29-2006	Mann, et al.	
		US-7,108,778	09-19-2006	Simpson, et al.	
		US-7,110,803	09-19-2006	Shults, et al.	
		US-7,113,821	09-26-2006	Sun, et al.	
		US-7,118,667	10-10-2006	Lee	
		US-7,134,999	11-14-2006	Brauker, et al.	
		US-7,136,689	11-14-2006	Shults, et al.	
		US-7,153,265	12-26-2006	Vachon	

EXAMINER **DATE CONSIDERED**

* EXAMINER: Initial if reference considered, whether or not citation is in conformance with MPEP 609. Draw line through citation if not in conformance and not considered. Include copy of this form with next communication to applicant.1 Applicant's unique citation designation number (optional) 2 Applicant is to place a check mark here if English language Translation is attached

Under the Paperwork Reduction Act of 1995, no persons are required to respond to a collection of information unless it contains a valid OMB control number..

Substitute for form 1449/PTO **INFORMATION DISCLOSURE STATEMENT BY APPLICANT** *(Use as many sheets as necessary)*				*Complete if Known*	
				Application Number	13/925,694
				Filing Date	June 24, 2013
				First Named Inventor	Wesley Scott Harper, et al.
				Art Unit	1631
				Examiner Name	Not yet assigned
Sheet	7	of	26	Attorney Docket No: TS-02-180C01	

US PATENT DOCUMENTS					
Examiner Initials*	Cite No.	Document Number Number-Kind Code	Publication Date MM-DD-YYYY	Name of Patentee or Applicant of Cited Document	Pages, Columns, Lines, Where Relevant Passages or Relevant Figures Appear
		US-7,171,274	01-30-2007	Starkweather, et al.	
		US-7,190,988	03-13-2007	Say, et al.	
		US-7,192,450	03-20-2007	Brauker, et al.	
		US-7,198,606	04-03-2007	Boecker, et al.	
		US-7,225,535	06-05-2007	Feldman, et al.	
		US-7,226,978	06-05-2007	Tapsak, et al.	
		US-7,241,266	07-10-2007	Zhou, et al.	
		US-7,258,673	08-21-2007	Racchini, et al.	
		US-7,267,665	09-11-2007	Steil, et al.	
		US-7,276,029	10-02-2007	Goode Jr., et al.	
		US-7,295,867	11-13-2007	Berner, et al.	
		US-7,299,082	11-20-2007	Feldman, et al.	
		US-7,310,544	12-18-2007	Brister, et al.	
		US-7,317,938	01-08-2008	Lorenz, et al.	
		US-7,335,294	02-26-2008	Heller, et al.	
		US-7,354,420	04-08-2008	Steil, et al.	
		US-7,364,592	04-29-2008	Carr-Brendel, et al.	
		US-7,366,556	04-29-2008	Brister, et al.	
		US-7,379,765	05-27-2008	Petisce, et al.	
		US-7,401,111	07-15-2008	Batman, et al.	
		US-7,402,153	07-22-2008	Steil, et al.	
		US-7,424,318	09-09-2008	Brister, et al.	
		US-7,460,898	12-02-2008	Brister, et al.	
		US-7,467,003	12-16-2008	Brister, et al.	
		US-7,471,972	12-30-2008	Rhodes, et al.	
		US-7,474,992	01-06-2009	Ariyur	
		US-7,494,465	02-24-2009	Brister, et al.	
		US-7,497,827	03-03-2009	Brister, et al.	
		US-7,499,002	03-03-2009	Blasko, et al.	
		US-7,519,408	04-14-2009	Rasdal, et al.	
		US-7,547,281	06-16-2009	Hayes, et al.	
		US-7,569,030	08-04-2009	Lebel, et al.	
		US-7,583,990	09-01-2009	Goode Jr., et al.	
		US-7,591,801	09-22-2009	Brauker, et al.	
		US-7,599,726	10-06-2009	Goode Jr., et al.	
		US-7,613,491	11-03-2009	Boock, et al.	
		US-7,615,007	11-10-2009	Shults, et al.	
		US-7,618,369	11-17-2009	Hayter, et al.	
		US-7,632,228	12-15-2009	Brauker, et al.	
		US-7,637,868	12-29-2009	Saint, et al.	

EXAMINER **DATE CONSIDERED**

Substitute Disclosure Statement Form (PTO-1449)
* EXAMINER: Initial if reference considered, whether or not citation is in conformance with MPEP 609. Draw line through citation if not in conformance and not considered. Include copy of this form with next communication to applicant.1 Applicant's unique citation designation number (optional) 2 Applicant is to place a check mark here if English language Translation is attached

Under the Paperwork Reduction Act of 1995, no persons are required to respond to a collection of information unless it contains a valid OMB control number..

Substitute for form 1449/PTO **INFORMATION DISCLOSURE STATEMENT BY APPLICANT** *(Use as many sheets as necessary)*				*Complete if Known*	
				Application Number	13/925,694
				Filing Date	June 24, 2013
				First Named Inventor	Wesley Scott Harper, et al.
				Art Unit	1631
				Examiner Name	Not yet assigned
Sheet	8	of	26	Attorney Docket No: TS-02-180C01	

US PATENT DOCUMENTS					
Examiner Initials*	Cite No.	Document Number Number-Kind Code	Publication Date MM-DD-YYYY	Name of Patentee or Applicant of Cited Document	Pages, Columns, Lines, Where Relevant Passages or Relevant Figures Appear
		US-7,640,048	12-29-2009	Dobbles, et al.	
		US-7,651,596	01-26-2010	Petisce, et al.	
		US-7,654,956	02-02-2010	Brister, et al.	
		US-7,657,297	02-02-2010	Simpson, et al.	
		US-7,699,775	04-20-2010	Desai, et al.	
		US-7,699,964	04-20-2010	Feldman, et al.	
		US-7,711,402	05-04-2010	Shults, et al.	
		US-7,713,574	05-11-2010	Brister, et al.	
		US-7,715,893	05-11-2010	Kamath, et al.	
		US-7,774,145	08-10-2010	Bruaker, et al.	
		US-7,778,680	08-17-2010	Goode Jr., et al.	
		US-7,826,981	11-02-2010	Goode, et al.	
		US-7,885,698	02-08-2011	Feldman, et al.	
		US-7,899,511	03-01-2011	Shults, et al.	
		US-7,905,833	03-15-2011	Brister, et al.	
		US-7,912,655	03-22-2011	Power, et al.	
		US-7,912,674	03-22-2011	Killoren Clark, et al.	
		US-7,914,450	03-29-2011	Goode Jr., et al.	
		US-7,928,850	04-19-2011	Hayter, et al.	
		US-7,974,672	07-05-2011	Shults, et al.	
		US-7,976,467	07-12-2011	Young, et al.	
		US-8,010,174	08-30-2011	Goode, et al.	
		US-8,066,639	11-29-2011	Nelson, et al.	
		US-8,216,138	07-10-2012	McGarraugh, et al.	
		US-2002/0019022	02-14-2002	Dunn, et al.	
		US-2002/0042090	04-11-2002	Heller, et al.	
		US-2002/0068860	06-06-2002	Clark	
		US-2002/0095076	07-18-2002	Krausman, et al.	
		US-2002/0103499	08-01-2002	Perez, et al.	
		US-2002/0106709	08-08-2002	Potts, et al.	
		US-2002/0128594	09-12-2002	Das, et al.	
		US-2002/0161288	10-31-2002	Shin, et al.	
		US-2002/0169635	11-14-2002	Shillingburg	
		US-2003/0004403	01-02-2003	Drinan, et al.	
		US-2003/0023317	01-30-2003	Brauker, et al.	
		US-2003/0032874	02-13-2003	Rhodes, et al.	
		US-2003/0042137	03-06-2003	Mao, et al.	
		US-2003/0065308	04-03-2003	Lebel, et al.	
		US-2003/0100821	05-29-2003	Heller, et al.	
		US-2003/0125612	07-03-2003	Fox, et al.	

EXAMINER **DATE CONSIDERED**

Substitute Disclosure Statement Form (PTO-1449)
* EXAMINER: Initial if reference considered, whether or not citation is in conformance with MPEP 609. Draw line through citation if not in conformance and not considered. Include copy of this form with next communication to applicant.1 Applicant's unique citation designation number (optional) 2 Applicant is to place a check mark here if English language Translation is attached

Under the Paperwork Reduction Act of 1995, no persons are required to respond to a collection of information unless it contains a valid OMB control number..

Substitute for form 1449/PTO				Complete if Known	
INFORMATION DISCLOSURE STATEMENT BY APPLICANT				**Application Number**	13/925,694
				Filing Date	June 24, 2013
				First Named Inventor	Wesley Scott Harper, et al.
(Use as many sheets as necessary)				**Art Unit**	1631
				Examiner Name	Not yet assigned
Sheet	9	of	26	Attorney Docket No: TS-02-180C01	

US PATENT DOCUMENTS					
Examiner Initials*	Cite No.	Document Number Number-Kind Code	Publication Date MM-DD-YYYY	Name of Patentee or Applicant of Cited Document	Pages, Columns, Lines, Where Relevant Passages or Relevant Figures Appear
		US-2003/0130616	07-10-2003	Steil, et al.	
		US-2003/0134347	07-17-2003	Heller, et al.	
		US-2003/0168338	09-11-2003	Gao, et al.	
		US-2003/0176933	09-18-2003	Lebel, et al.	
		US-2003/0187338	10-02-2003	Say, et al.	
		US-2003/0191377	10-09-2003	Robinson, et al.	
		US-2003/0199790	10-23-2003	Boecker, et al.	
		US-2003/0208113	11-06-2003	Mault, et al.	
		US-2003/0212317	11-13-2003	Kovatchev, et al.	
		US-2003/0212379	11-13-2003	Bylund, et al.	
		US-2003/0216630	11-20-2003	Jersey-Willuhn, et al.	
		US-2003/0217966	11-27-2003	Tapsak, et al.	
		US-2004/0010186	01-15-2004	Kimball, et al	
		US-2004/0010207	01-15-2004	Flaherty, et al.	
		US-2004/0011671	01-22-2004	Shults, et al.	
		US-2004/0024553	02-05-2004	Monfre, et al.	
		US-2004/0039298	02-26-2004	Abreu	
		US-2004/0040840	03-04-2004	Mao, et al.	
		US-2004/0045879	03-11-2004	Shults, et al.	
		US-2004/0064068	04-01-2004	DeNuzzio, et al.	
		US-2004/0099529	05-27-2004	Mao, et al.	
		US-2004/0106858	06-03-2004	Say, et al.	
		US-2004/0122353	06-24-2004	Shahmirian, et al.	
		US-2004/0133164	07-08-2004	Funderburk, et al.	
		US-2004/0138588	07-15-2004	Saikley, et al.	
		US-2004/0146909	07-29-2004	Duong, et al.	
		US-2004/0152622	08-05-2004	Keith, et al.	
		US-2004/0167801	08-26-2004	Say, et al.	
		US-2004/0171921	09-02-2004	Say, et al.	
		US-2004/0176672	09-09-2004	Silver, et al.	
		US-2004/0186362	09-23-2004	Brauker, et al.	
		US-2004/0186365	09-23-2004	Jin, et al.	
		US-2004/0193025	09-30-2004	Steil, et al.	
		US-2004/0193090	09-30-2004	Lebel, et al.	
		US-2004/0197846	10-07-2004	Hockersmith, et al.	
		US-2004/0199059	10-07-2004	Brauker, et al.	
		US-2004/0204687	10-14-2004	Mogensen, et al.	
		US-2004/0225338	11-11-2004	Lebel, et al.	
		US-2004/0236200	11-25-2004	Say, et al.	
		US-2004/0254433	12-16-2004	Bandis, et al.	

EXAMINER **DATE CONSIDERED**

Substitute Disclosure Statement Form (PTO-1449)
* EXAMINER: Initial if reference considered, whether or not citation is in conformance with MPEP 609. Draw line through citation if not in conformance and not considered. Include copy of this form with next communication to applicant.1 Applicant's unique citation designation number (optional) 2 Applicant is to place a check mark here if English language Translation is attached

Under the Paperwork Reduction Act of 1995, no persons are required to respond to a collection of information unless it contains a valid OMB control number..

Substitute for form 1449/PTO **INFORMATION DISCLOSURE STATEMENT BY APPLICANT** *(Use as many sheets as necessary)*				*Complete if Known*	
				Application Number	13/925,694
				Filing Date	June 24, 2013
				First Named Inventor	Wesley Scott Harper, et al.
				Art Unit	1631
				Examiner Name	Not yet assigned
Sheet	10	of	26	Attorney Docket No: TS-02-180C01	

US PATENT DOCUMENTS					
Examiner Initials*	Cite No.	Document Number Number-Kind Code	Publication Date MM-DD-YYYY	Name of Patentee or Applicant of Cited Document	Pages, Columns, Lines, Where Relevant Passages or Relevant Figures Appear
		US-2004/0267300	12-30-2004	Mace	
		US-2005/0004439	01-06-2005	Shin, et al.	
		US-2005/0004494	01-06-2005	Perez, et al.	
		US-2005/0010269	01-13-2005	Lebel, et al.	
		US-2005/0027177	02-03-2005	Shin, et al.	
		US-2005/0027180	02-03-2005	Goode, et al.	
		US-2005/0027181	02-03-2005	Goode, et al.	
		US-2005/0027462	02-03-2005	Goode, et al.	
		US-2005/0027463	02-03-2005	Goode, et al.	
		US-2005/0031689	02-10-2005	Shults, et al.	
		US-2005/0038332	02-17-2005	Saidara, et al.	
		US-2005/0043598	02-24-2005	Goode Jr., et al.	
		US-2005/0090607	04-28-2005	Tapsak, et al.	
		US-2005/0096511	05-05-2005	Fox, et al.	
		US-2005/0096512	05-05-2005	Fox, et al.	
		US-2005/0112169	05-26-2005	Brauker, et al.	
		US-2005/0113653	05-26-2005	Fox, et al.	
		US-2005/0114068	05-26-2005	Chey, et al.	
		US-2005/0121322	06-09-2005	Say, et al.	
		US-2005/0131346	06-16-2005	Douglas	
		US-2005/0137530	06-23-2005	Campbell, et al.	
		US-2005/0143635	06-30-2005	Kamath, et al.	
		US-2005/0176136	08-11-2005	Burd, et al.	
		US-2005/0177398	08-11-2005	Watanabe, et al.	
		US-2005/0182306	08-18-2005	Sloan	
		US-2005/0187720	08-25-2005	Goode Jr., et al.	
		US-2005/0192494	09-01-2005	Ginsberg	
		US-2005/0192557	09-01-2005	Brauker, et al.	
		US-2005/0195930	09-08-2005	Spital, et al.	
		US-2005/0199494	09-15-2005	Say, et al.	
		US-2005/0203360	09-15-2005	Brauker, et al.	
		US-2005/0239154	10-27-2005	Feldman, et al.	
		US-2005/0241957	11-03-2005	Mao, et al.	
		US-2005/0245795	11-03-2005	Goode Jr., et al.	
		US-2005/0245799	11-03-2005	Brauker, et al.	
		US-2005/0245839	11-03-2005	Stivoric, et al.	
		US-2005/0245904	11-03-2005	Estes, et al.	
		US-2005/0287620	12-29-2005	Heller, et al.	
		US-2006/0001538	01-05-2006	Kraft, et al.	
		US-2006/0004270	01-05-2006	Bedard, et al.	

EXAMINER **DATE CONSIDERED**

Substitute Disclosure Statement Form (PTO-1449)
* EXAMINER: Initial if reference considered, whether or not citation is in conformance with MPEP 609. Draw line through citation if not in conformance and not considered. Include copy of this form with next communication to applicant.1 Applicant's unique citation designation number (optional) 2 Applicant is to place a check mark here if English language Translation is attached

Under the Paperwork Reduction Act of 1995, no persons are required to respond to a collection of information unless it contains a valid OMB control number..

Substitute for form 1449/PTO

INFORMATION DISCLOSURE STATEMENT BY APPLICANT

(Use as many sheets as necessary)

Sheet	11	of	26

Complete if Known	
Application Number	13/925,694
Filing Date	June 24, 2013
First Named Inventor	Wesley Scott Harper, et al.
Art Unit	1631
Examiner Name	Not yet assigned
Attorney Docket No: TS-02-180C01	

US PATENT DOCUMENTS

Examiner Initials*	Cite No.	Document Number Number-Kind Code	Publication Date MM-DD-YYYY	Name of Patentee or Applicant of Cited Document	Pages, Columns, Lines, Where Relevant Passages or Relevant Figures Appear
		US-2006/0015020	01-19-2006	Neale, et al.	
		US-2006/0015024	01-19-2006	Brister, et al.	
		US-2006/0016700	01-26-2006	Brister, et al.	
		US-2006/0017923	01-26-2006	Ruchti, et al.	
		US-2006/0019327	01-26-2006	Brister, et al.	
		US-2006/0020186	01-26-2006	Brister, et al.	
		US-2006/0020187	01-26-2006	Brister, et al.	
		US-2006/0020188	01-26-2006	Kamath, et al.	
		US-2006/0020189	01-26-2006	Brister, et al.	
		US-2006/0020190	01-26-2006	Kamath, et al.	
		US-2006/0020191	01-26-2006	Brister, et al.	
		US-2006/0020192	01-26-2006	Brister, et al.	
		US-2006/0020300	01-26-2006	Nghiem, et al.	
		US-2006/0029177	02-09-2006	Cranford Jr., et al.	
		US-2006/0031094	02-09-2006	Cohen, et al.	
		US-2006/0036139	02-16-2006	Brister, et al.	
		US-2006/0036140	02-16-2006	Brister, et al.	
		US-2006/0036141	02-16-2006	Kamath, et al.	
		US-2006/0036142	02-16-2006	Brister, et al.	
		US-2006/0036143	02-16-2006	Brister, et al.	
		US-2006/0036144	02-16-2006	Brister, et al.	
		US-2006/0036145	02-16-2006	Brister, et al.	
		US-2006/0091006	05-04-2006	Wang, et al.	
		US-2006/0142651	06-29-2006	Brister, et al.	
		US-2006/0155180	07-13-2006	Brister, et al.	
		US-2006/0166629	07-27-2006	Reggiardo	
		US-2006/0173260	08-03-2006	Gaoni, et al.	
		US-2006/0173406	08-03-2006	Hayes, et al.	
		US-2006/0173444	08-03-2006	Choy, et al.	
		US-2006/0183985	08-17-2006	Brister, et al.	
		US-2006/0189863	08-24-2006	Peyser, et al.	
		US-2006/0222566	10-05-2006	Brauker, et al.	
		US-2006/0224109	10-05-2006	Steil, et al.	
		US-2006/0229512	10-12-2006	Petisce, et al.	
		US-2006/0247508	11-02-2006	Fennell	
		US-2006/0253296	11-09-2006	Liisberg, et al.	
		US-2006/0264785	11-23-2006	Dring, et al.	
		US-2006/0272652	12-07-2006	Stocker, et al.	
		US-2007/0016381	01-18-2007	Kamath, et al.	
		US-2007/0027381	02-01-2007	Stafford	

EXAMINER **DATE CONSIDERED**

Substitute Disclosure Statement Form (PTO-1449)
* EXAMINER: Initial if reference considered, whether or not citation is in conformance with MPEP 609. Draw line through citation if not in conformance and not considered. Include copy of this form with next communication to applicant.1 Applicant's unique citation designation number (optional) 2 Applicant is to place a check mark here if English language Translation is attached

Under the Paperwork Reduction Act of 1995, no persons are required to respond to a collection of information unless it contains a valid OMB control number..

Substitute for form 1449/PTO				Complete if Known	
INFORMATION DISCLOSURE STATEMENT BY APPLICANT				**Application Number**	13/925,694
				Filing Date	June 24, 2013
				First Named Inventor	Wesley Scott Harper, et al.
(Use as many sheets as necessary)				**Art Unit**	1631
				Examiner Name	Not yet assigned
Sheet	12	of	26	Attorney Docket No: TS-02-180C01	

US PATENT DOCUMENTS					
Examiner Initials*	Cite No.	Document Number Number-Kind Code	Publication Date MM-DD-YYYY	Name of Patentee or Applicant of Cited Document	Pages, Columns, Lines, Where Relevant Passages or Relevant Figures Appear
		US-2007/0032706	02-08-2007	Kamath, et al.	
		US-2007/0033074	02-08-2007	Nitzan, et al.	
		US-2007/0038053	02-15-2007	Berner, et al.	
		US-2007/0060803	03-15-2007	Liljeryd, et al.	
		US-2007/0060814	03-15-2007	Stafford	
		US-2007/0066873	03-22-2007	Kamath, et al.	
		US-2007/0071681	03-29-2007	Gadkar, et al.	
		US-2007/0073129	03-29-2007	Shah, et al.	
		US-2007/0078314	04-05-2007	Grounsell, et al.	
		US-2007/0078320	04-05-2007	Stafford	
		US-2007/0078321	04-05-2007	Mazza, et al.	
		US-2007/0078322	04-05-2007	Stafford	
		US-2007/0078323	04-05-2007	Reggiardo, et al.	
		US-2007/0093786	04-26-2007	Goldsmith, et al.	
		US-2007/0106135	05-10-2007	Sloan, et al.	
		US-2007/0118405	05-24-2007	Campbell, et al.	
		US-2007/0124002	05-31-2007	Estes, et al.	
		US-2007/0149875	06-28-2007	Ouyang, et al.	
		US-2007/0163880	07-19-2007	Woo, et al.	
		US-2007/0168224	07-19-2007	Letzt, et al.	
		US-2007/0173706	07-26-2007	Neinast, et al.	
		US-2007/0173761	07-26-2007	Kanderian, et al.	
		US-2007/0179349	08-02-2007	Hoyme, et al.	
		US-2007/0179352	08-02-2007	Randlov, et al.	
		US-2007/0191701	08-16-2007	Feldman, et al.	
		US-2007/0197889	08-23-2007	Brauker, et al.	
		US-2007/0203407	08-30-2007	Hoss, et al.	
		US-2007/0203966	08-30-2007	Brauker, et al.	
		US-2007/0213657	09-13-2007	Jennewine, et al.	
		US-2007/0232880	10-04-2007	Siddiqui, et al.	
		US-2007/0235331	10-11-2007	Simpson, et al.	
		US-2007/0249922	10-25-2007	Peyser, et al.	
		US-2007/0270672	11-22-2007	Hayter, et al.	
		US-2008/0009692	01-10-2008	Stafford	
		US-2008/0017522	01-24-2008	Heller, et al.	
		US-2008/0021666	01-24-2008	Goode Jr., et al.	
		US-2008/0029391	02-07-2008	Mao, et al.	
		US-2008/0033254	02-07-2008	Kamath, et al.	
		US-2008/0039702	02-14-2008	Hayter, et al.	
		US-2008/0045824	02-21-2008	Tapsak, et al.	

EXAMINER **DATE CONSIDERED**

Substitute Disclosure Statement Form (PTO-1449)
* EXAMINER: Initial if reference considered, whether or not citation is in conformance with MPEP 609. Draw line through citation if not in conformance and not considered. Include copy of this form with next communication to applicant.1 Applicant's unique citation designation number (optional) 2 Applicant is to place a check mark here if English language Translation is attached

Under the Paperwork Reduction Act of 1995, no persons are required to respond to a collection of information unless it contains a valid OMB control number..

Substitute for form 1449/PTO				Complete if Known	
INFORMATION DISCLOSURE STATEMENT BY APPLICANT				**Application Number**	13/925,694
				Filing Date	June 24, 2013
				First Named Inventor	Wesley Scott Harper, et al.
(Use as many sheets as necessary)				**Art Unit**	1631
				Examiner Name	Not yet assigned
Sheet	13	of	26	Attorney Docket No: TS-02-180C01	

US PATENT DOCUMENTS					
Examiner Initials*	Cite No.	Document Number Number-Kind Code	Publication Date MM-DD-YYYY	Name of Patentee or Applicant of Cited Document	Pages, Columns, Lines, Where Relevant Passages or Relevant Figures Appear
		US-2008/0058625	03-06-2008	McGarraugh, et al.	
		US-2008/0064937	03-13-2008	McGarraugh, et al.	
		US-2008/0071156	03-20-2008	Brister, et al.	
		US-2008/0071157	03-20-2008	McGarraugh, et al.	
		US-2008/0071158	03-20-2008	McGarraugh, et al.	
		US-2008/0071580	03-20-2008	Marcus	
		US-2008/0081977	04-03-2008	Hayter, et al.	
		US-2008/0083617	04-10-2008	Simpson, et al.	
		US-2008/0086042	04-10-2008	Brister, et al.	
		US-2008/0086044	04-10-2008	Brister, et al.	
		US-2008/0086273	04-10-2008	Shults, et al.	
		US-2008/0097289	04-24-2008	Steil, et al.	
		US-2008/0108942	05-08-2008	Brister, et al.	
		US-2008/0119703	05-22-2008	Brister, et al.	
		US-2008/0119708	05-22-2008	Budiman	
		US-2008/0139910	06-12-2008	Mastrototaro, et al.	
		US-2008/0154513	06-26-2008	Kovatchev, et al.	
		US-2008/0161666	07-03-2008	Feldman, et al.	
		US-2008/0167543	07-10-2008	Say, et al.	
		US-2008/0172205	07-17-2008	Breton, et al.	
		US-2008/0183060	07-31-2008	Steil, et al.	
		US-2008/0183061	07-31-2008	Goode, et al.	
		US-2008/0183399	07-31-2008	Goode, et al.	
		US-2008/0188731	08-07-2008	Brister, et al.	
		US-2008/0188796	08-07-2008	Steil, et al.	
		US-2008/0189051	08-07-2008	Goode, et al.	
		US-2008/0194934	08-14-2008	Ray, et al.	
		US-2008/0194935	08-14-2008	Brister, et al.	
		US-2008/0194936	08-14-2008	Goode, et al.	
		US-2008/0194937	08-14-2008	Goode, et al.	
		US-2008/0194938	08-14-2008	Brister, et al.	
		US-2008/0195232	08-14-2008	Carr-Brendel, et al.	
		US-2008/0195967	08-14-2008	Goode, et al.	
		US-2008/0197024	08-21-2008	Simpson, et al.	
		US-2008/0200788	08-21-2008	Brister, et al.	
		US-2008/0200789	08-21-2008	Brister, et al.	
		US-2008/0200791	08-21-2008	Simpson, et al.	
		US-2008/0208025	08-28-2008	Shults, et al.	
		US-2008/0208113	08-28-2008	Damiano, et al.	
		US-2008/0214915	09-04-2008	Brister, et al.	

EXAMINER **DATE CONSIDERED**

Substitute Disclosure Statement Form (PTO-1449)
* EXAMINER: Initial if reference considered, whether or not citation is in conformance with MPEP 609. Draw line through citation if not in conformance and not considered. Include copy of this form with next communication to applicant.1 Applicant's unique citation designation number (optional) 2 Applicant is to place a check mark here if English language Translation is attached

Under the Paperwork Reduction Act of 1995, no persons are required to respond to a collection of information unless it contains a valid OMB control number..

Substitute for form 1449/PTO **INFORMATION DISCLOSURE STATEMENT BY APPLICANT** *(Use as many sheets as necessary)*				*Complete if Known*	
				Application Number	13/925,694
				Filing Date	June 24, 2013
				First Named Inventor	Wesley Scott Harper, et al.
				Art Unit	1631
				Examiner Name	Not yet assigned
Sheet	14	of	26	Attorney Docket No: TS-02-180C01	

US PATENT DOCUMENTS					
Examiner Initials*	Cite No.	Document Number Number-Kind Code	Publication Date MM-DD-YYYY	Name of Patentee or Applicant of Cited Document	Pages, Columns, Lines, Where Relevant Passages or Relevant Figures Appear
		US-2008/0214918	09-04-2008	Brister, et al.	
		US-2008/0228051	09-18-2008	Shults, et al.	
		US-2008/0228054	09-18-2008	Shults, et al.	
		US-2008/0234992	09-25-2008	Ray, et al.	
		US-2008/0242961	10-02-2008	Brister, et al.	
		US-2008/0255434	10-16-2008	Hayter, et al.	
		US-2008/0255437	10-16-2008	Hayter	
		US-2008/0255438	10-16-2008	Saudara, et al.	
		US-2008/0255808	10-16-2008	Hayter	
		US-2008/0256048	10-16-2008	Hayter	
		US-2008/0262469	10-23-2008	Brister, et al.	
		US-2008/0275313	11-06-2008	Brister, et al.	
		US-2008/0278331	11-13-2008	Hayter, et al.	
		US-2008/0287755	11-20-2008	Sass, et al.	
		US-2008/0287761	11-20-2008	Hayter	
		US-2008/0287761	11-20-2008	Hayter, et al.	
		US-2008/0287762	11-20-2008	Hayter	
		US-2008/0287763	11-20-2008	Hayter	
		US-2008/0287764	11-20-2008	Rasdal, et al.	
		US-2008/0287765	11-20-2008	Rasdal, et al.	
		US-2008/0287766	11-20-2008	Rasdal, et al.	
		US-2008/0288180	11-20-2008	Hayter	
		US-2008/0288204	11-20-2008	Hayter, et al.	
		US-2008/0296155	12-04-2008	Shults, et al.	
		US-2008/0300572	12-04-2008	Rankers, et al.	
		US-2008/0306368	12-11-2008	Goode, et al.	
		US-2008/0306434	12-11-2008	Dobbles, et al.	
		US-2008/0306435	12-11-2008	Kamath, et al.	
		US-2008/0306444	12-11-2008	Brister, et al.	
		US-2008/0312841	12-18-2008	Hayter	
		US-2008/0312842	12-18-2008	Hayter	
		US-2008/0312844	12-18-2008	Hayter, et al.	
		US-2008/0312845	12-18-2008	Hayter, et al.	
		US-2008/0314395	12-25-2008	Kovatchev	
		US-2008/0319279	12-25-2008	Ramsay, et al.	
		US-2009/0005665	01-01-2009	Hayter, et al.	
		US-2009/0005665	01-01-2009	Hayter, et al.	
		US-2009/0006034	01-01-2009	Hayter, et al.	
		US-2009/0012379	01-08-2009	Goode, et al.	
		US-2009/0018424	01-15-2009	Kamath, et al.	

EXAMINER **DATE CONSIDERED**

Substitute Disclosure Statement Form (PTO-1449)
* EXAMINER: Initial if reference considered, whether or not citation is in conformance with MPEP 609. Draw line through citation if not in conformance and not considered. Include copy of this form with next communication to applicant.1 Applicant's unique citation designation number (optional) 2 Applicant is to place a check mark here if English language Translation is attached

Under the Paperwork Reduction Act of 1995, no persons are required to respond to a collection of information unless it contains a valid OMB control number..

Substitute for form 1449/PTO **INFORMATION DISCLOSURE STATEMENT BY APPLICANT** *(Use as many sheets as necessary)*				*Complete if Known*	
				Application Number	13/925,694
				Filing Date	June 24, 2013
				First Named Inventor	Wesley Scott Harper, et al.
				Art Unit	1631
				Examiner Name	Not yet assigned
Sheet	15	of	26	Attorney Docket No: TS-02-180C01	

US PATENT DOCUMENTS					
Examiner Initials*	Cite No.	Document Number Number-Kind Code	Publication Date MM-DD-YYYY	Name of Patentee or Applicant of Cited Document	Pages, Columns, Lines, Where Relevant Passages or Relevant Figures Appear
		US-2009/0018425	01-15-2009	Ouyang, et al.	
		US-2009/0030294	01-29-2009	Petisce, et al.	
		US-2009/0033482	02-05-2009	Hayter, et al.	
		US-2009/0036747	02-05-2009	Hayter, et al.	
		US-2009/0036758	02-05-2009	Brauker, et al.	
		US-2009/0036760	02-05-2009	Hayter	
		US-2009/0036763	02-05-2009	Brauker, et al.	
		US-2009/0043181	02-12-2009	Brauker, et al.	
		US-2009/0043182	02-12-2009	Brauker, et al.	
		US-2009/0043525	02-12-2009	Brauker, et al.	
		US-2009/0043541	02-12-2009	Brauker, et al.	
		US-2009/0043542	02-12-2009	Brauker, et al.	
		US-2009/0045055	02-19-2009	Rhodes, et al.	
		US-2009/0048503	02-19-2009	Dalal, et al.	
		US-2009/0054750	02-26-2009	Jennewine	
		US-2009/0055149	02-26-2009	Hayter, et al.	
		US-2009/0062633	03-05-2009	Brauker, et al.	
		US-2009/0062635	03-05-2009	Brauker, et al.	
		US-2009/0062767	03-05-2009	VanAntwerp, et al.	
		US-2009/0063402	03-05-2009	Hayter	
		US-2009/0076356	03-19-2009	Simpson, et al.	
		US-2009/0076360	03-19-2009	Brister, et al.	
		US-2009/0076361	03-19-2009	Kamath, et al.	
		US-2009/0082693	03-26-2009	Stafford	
		US-2009/0099436	04-16-2009	Brister, et al.	
		US-2009/0105570	04-23-2009	Sloan, et al.	
		US-2009/0105636	04-23-2009	Hayter, et al.	
		US-2009/0112154	04-30-2009	Montgomery, et al.	
		US-2009/0112478	04-30-2009	Mueller Jr., et al.	
		US-2009/0124877	05-14-2009	Goode, et al.	
		US-2009/0124878	05-14-2009	Goode, et al.	
		US-2009/0124879	05-14-2009	Brister, et al.	
		US-2009/0124964	05-14-2009	Leach, et al.	
		US-2009/0131768	05-21-2009	Simpson, et al.	
		US-2009/0131769	05-21-2009	Leach, et al.	
		US-2009/0131776	05-21-2009	Simpson, et al.	
		US-2009/0131777	05-21-2009	Simpson, et al.	
		US-2009/0137886	05-28-2009	Shariati, et al.	
		US-2009/0137887	05-28-2009	Shariati, et al.	
		US-2009/0143659	06-04-2009	Li, et al.	

EXAMINER **DATE CONSIDERED**

Substitute Disclosure Statement Form (PTO-1449)
* EXAMINER: Initial if reference considered, whether or not citation is in conformance with MPEP 609. Draw line through citation if not in conformance and not considered. Include copy of this form with next communication to applicant.1 Applicant's unique citation designation number (optional) 2 Applicant is to place a check mark here if English language Translation is attached

Under the Paperwork Reduction Act of 1995, no persons are required to respond to a collection of information unless it contains a valid OMB control number..

Substitute for form 1449/PTO **INFORMATION DISCLOSURE STATEMENT BY APPLICANT** *(Use as many sheets as necessary)*				*Complete if Known*	
				Application Number	13/925,694
				Filing Date	June 24, 2013
				First Named Inventor	Wesley Scott Harper, et al.
				Art Unit	1631
				Examiner Name	Not yet assigned
Sheet	16	of	26	Attorney Docket No: TS-02-180C01	

US PATENT DOCUMENTS					
Examiner Initials*	Cite No.	Document Number Number-Kind Code	Publication Date MM-DD-YYYY	Name of Patentee or Applicant of Cited Document	Pages, Columns, Lines, Where Relevant Passages or Relevant Figures Appear
		US-2009/0143660	06-04-2009	Brister, et al.	
		US-2009/0156919	06-18-2009	Brister, et al.	
		US-2009/0156924	06-18-2009	Shariati, et al.	
		US-2009/0157430	06-18-2009	Rule, et al.	
		US-2009/0163790	06-25-2009	Brister, et al.	
		US-2009/0163791	06-25-2009	Brister, et al.	
		US-2009/0164190	06-25-2009	Hayter	
		US-2009/0164239	06-25-2009	Hayter, et al.	
		US-2009/0164251	06-25-2009	Hayter	
		US-2009/0178459	07-16-2009	Li, et al.	
		US-2009/0182217	07-16-2009	Li, et al.	
		US-2009/0192366	07-30-2009	Mensinger, et al.	
		US-2009/0192380	07-30-2009	Shariati, et al.	
		US-2009/0192722	07-30-2009	Shariati, et al.	
		US-2009/0192724	07-30-2009	Brauker, et al.	
		US-2009/0192745	07-30-2009	Kamath, et al.	
		US-2009/0192751	07-30-2009	Kamath, et al.	
		US-2009/0198118	08-06-2009	Hayter, et al.	
		US-2009/0203981	08-13-2009	Brauker, et al.	
		US-2009/0204341	08-13-2009	Brauker, et al.	
		US-2009/0210249	08-20-2009	Rasch-Menges, et al.	
		US-2009/0216103	08-27-2009	Brister, et al.	
		US-2009/0240120	09-24-2009	Mensinger, et al.	
		US-2009/0240128	09-24-2009	Mensinger, et al.	
		US-2009/0240193	09-24-2009	Mensinger, et al.	
		US-2009/0242399	10-01-2009	Kamath, et al.	
		US-2009/0242425	10-01-2009	Kamath, et al.	
		US-2009/0247855	10-01-2009	Boock, et al.	
		US-2009/0247856	10-01-2009	Boock, et al.	
		US-2009/0247857	10-01-2009	Harper, et al.	
		US-2009/0287073	11-19-2009	Boock, et al.	
		US-2009/0287074	11-19-2009	Shults, et al.	
		US-2009/0299155	12-03-2009	Yang, et al.	
		US-2009/0299156	12-03-2009	Simpson, et al.	
		US-2009/0299162	12-03-2009	Brauker, et al.	
		US-2009/0299276	12-03-2009	Brauker, et al.	
		US-2010/0010324	01-14-2010	Brauker, et al.	
		US-2010/0010331	01-14-2010	Brauker, et al.	
		US-2010/0010332	01-14-2010	Brauker, et al.	
		US-2010/0016687	01-21-2010	Brauker, et al.	

EXAMINER **DATE CONSIDERED**

Substitute Disclosure Statement Form (PTO-1449)
* EXAMINER: Initial if reference considered, whether or not citation is in conformance with MPEP 609. Draw line through citation if not in conformance and not considered. Include copy of this form with next communication to applicant.1 Applicant's unique citation designation number (optional) 2 Applicant is to place a check mark here if English language Translation is attached

Under the Paperwork Reduction Act of 1995, no persons are required to respond to a collection of information unless it contains a valid OMB control number..

Substitute for form 1449/PTO **INFORMATION DISCLOSURE STATEMENT BY APPLICANT** *(Use as many sheets as necessary)*				*Complete if Known*	
				Application Number	13/925,694
				Filing Date	June 24, 2013
				First Named Inventor	Wesley Scott Harper, et al.
				Art Unit	1631
				Examiner Name	Not yet assigned
Sheet	17	of	26	Attorney Docket No: TS-02-180C01	

US PATENT DOCUMENTS					
Examiner Initials*	Cite No.	Document Number Number-Kind Code	Publication Date MM-DD-YYYY	Name of Patentee or Applicant of Cited Document	Pages, Columns, Lines, Where Relevant Passages or Relevant Figures Appear
		US-2010/0016698	01-21-2010	Rasdal, et al.	
		US-2010/0022855	01-28-2010	Brauker, et al.	
		US-2010/0023291	01-28-2010	Hayter, et al.	
		US-2010/0030038	02-04-2010	Brauker, et al.	
		US-2010/0030053	02-04-2010	Goode Jr., et al.	
		US-2010/0030484	02-04-2010	Brauker, et al.	
		US-2010/0030485	02-04-2010	Brauker, et al.	
		US-2010/0036215	02-11-2010	Goode Jr., et al.	
		US-2010/0036216	02-11-2010	Goode Jr., et al.	
		US-2010/0036222	02-11-2010	Goode Jr., et al.	
		US-2010/0036223	02-11-2010	Goode Jr., et al.	
		US-2010/0036225	02-11-2010	Goode Jr., et al.	
		US-2010/0041971	02-18-2010	Goode Jr., et al.	
		US-2010/0045465	02-25-2010	Brauker, et al.	
		US-2010/0049024	02-25-2010	Saint, et al.	
		US-2010/0057040	03-04-2010	Hayter	
		US-2010/0057041	03-04-2010	Hayter	
		US-2010/0057042	03-04-2010	Hayter	
		US-2010/0057044	03-04-2010	Hayter	
		US-2010/0057057	03-04-2010	Hayter, et al.	
		US-2010/0063373	03-11-2010	Kamath, et al.	
		US-2010/0076283	03-25-2010	Simpson, et al.	
		US-2010/0081906	04-01-2010	Hayter, et al.	
		US-2010/0081908	04-01-2010	Dobbles, et al.	
		US-2010/0081909	04-01-2010	Budiman, et al.	
		US-2010/0081910	04-01-2010	Brister, et al.	
		US-2010/0087724	04-08-2010	Brauker, et al.	
		US-2010/0096259	04-22-2010	Zhang, et al.	
		US-2010/0099970	04-22-2010	Shults, et al.	
		US-2010/0099971	04-22-2010	Shults, et al.	
		US-2010/0105999	04-29-2010	Dixon, et al.	
		US-2010/0119693	05-13-2010	Tapsak, et al.	
		US-2010/0121169	05-13-2010	Petisce, et al.	
		US-2010/0152548	06-17-2010	Koski	
		US-2010/0152554	06-17-2010	Steine, et al.	
		US-2010/0160757	06-24-2010	Weinert, et al.	
		US-2010/0160759	06-24-2010	Celentano, et al.	
		US-2010/0168538	07-01-2010	Keenan, et al.	
		US-2010/0168546	07-01-2010	Kamath, et al.	
		US-2010/0174158	07-08-2010	Kamath, et al.	

EXAMINER **DATE CONSIDERED**

Substitute Disclosure Statement Form (PTO-1449)
* EXAMINER: Initial if reference considered, whether or not citation is in conformance with MPEP 609. Draw line through citation if not in conformance and not considered. Include copy of this form with next communication to applicant.1 Applicant's unique citation designation number (optional) 2 Applicant is to place a check mark here if English language Translation is attached

Under the Paperwork Reduction Act of 1995, no persons are required to respond to a collection of information unless it contains a valid OMB control number..

Substitute for form 1449/PTO				Complete if Known	
INFORMATION DISCLOSURE STATEMENT BY APPLICANT				**Application Number**	13/925,694
				Filing Date	June 24, 2013
				First Named Inventor	Wesley Scott Harper, et al.
(Use as many sheets as necessary)				**Art Unit**	1631
				Examiner Name	Not yet assigned
Sheet	18	of	26	Attorney Docket No: TS-02-180C01	

US PATENT DOCUMENTS					
Examiner Initials*	Cite No.	Document Number Number-Kind Code	Publication Date MM-DD-YYYY	Name of Patentee or Applicant of Cited Document	Pages, Columns, Lines, Where Relevant Passages or Relevant Figures Appear
		US-2010/0174163	07-08-2010	Brister, et al.	
		US-2010/0174164	07-08-2010	Brister, et al.	
		US-2010/0174165	07-08-2010	Brister, et al.	
		US-2010/0174166	07-08-2010	Brister, et al.	
		US-2010/0174167	07-08-2010	Kamath, et al.	
		US-2010/0174168	07-08-2010	Goode, et al.	
		US-2010/0179401	07-15-2010	Rasdal, et al.	
		US-2010/0179402	07-15-2010	Goode, et al.	
		US-2010/0179404	07-15-2010	Kamath, et al.	
		US-2010/0179408	07-15-2010	Kamath, et al.	
		US-2010/0179409	07-15-2010	Kamath, et al.	
		US-2010/0185065	07-22-2010	Goode, et al.	
		US-2010/0185070	07-22-2010	Brister, et al.	
		US-2010/0185071	07-22-2010	Simpson, et al.	
		US-2010/0185072	07-22-2010	Goode, et al.	
		US-2010/0185075	07-22-2010	Brister, et al.	
		US-2010/0191082	07-29-2010	Brister, et al.	
		US-2010/0191085	07-29-2010	Budiman	
		US-2010/0191087	07-29-2010	Talbot, et al.	
		US-2010/0191472	07-29-2010	Doniger, et al.	
		US-2010/0198035	08-05-2010	Kamath, et al.	
		US-2010/0198036	08-05-2010	Kamath, et al.	
		US-2010/0198142	08-05-2010	Sloan, et al.	
		US-2010/0204557	08-12-2010	Kiaie, et al	
		US-2010/0212583	08-26-2010	Brister, et al.	
		US-2010/0214104	08-26-2010	Goode, et al.	
		US-2010/0217557	08-26-2010	Kamath, et al.	
		US-2010/0223013	09-02-2010	Kamath, et al.	
		US-2010/0223022	09-02-2010	Kamath, et al.	
		US-2010/0223023	09-02-2010	Kamath, et al.	
		US-2010/0228109	09-09-2010	Kamath, et al.	
		US-2010/0228497	09-09-2010	Kamath, et al.	
		US-2010/0234710	09-16-2010	Budiman, et al.	
		US-2010/0240975	09-23-2010	Goode, et al.	
		US-2010/0240976	09-23-2010	Goode, et al.	
		US-2010/0259543	10-14-2010	Tarassenko, et al.	
		US-2010/0261987	10-14-2010	Kamath, et al.	
		US-2010/0274107	10-28-2010	Boock, et al.	
		US-2010/0274515	10-28-2010	Hoss, et al.	
		US-2010/0280341	11-04-2010	Boock, et al.	

EXAMINER **DATE CONSIDERED**

Substitute Disclosure Statement Form (PTO-1449)
* EXAMINER: Initial if reference considered, whether or not citation is in conformance with MPEP 609. Draw line through citation if not in conformance and not considered. Include copy of this form with next communication to applicant.1 Applicant's unique citation designation number (optional) 2 Applicant is to place a check mark here if English language Translation is attached

Under the Paperwork Reduction Act of 1995, no persons are required to respond to a collection of information unless it contains a valid OMB control number..

Substitute for form 1449/PTO **INFORMATION DISCLOSURE STATEMENT BY APPLICANT** *(Use as many sheets as necessary)*				*Complete if Known*	
				Application Number	13/925,694
				Filing Date	June 24, 2013
				First Named Inventor	Wesley Scott Harper, et al.
				Art Unit	1631
				Examiner Name	Not yet assigned
Sheet	19	of	26	Attorney Docket No: TS-02-180C01	

US PATENT DOCUMENTS					
Examiner Initials*	Cite No.	Document Number Number-Kind Code	Publication Date MM-DD-YYYY	Name of Patentee or Applicant of Cited Document	Pages, Columns, Lines, Where Relevant Passages or Relevant Figures Appear
		US-2010/0280782	11-04-2010	Harper, et al.	
		US-2010/0286496	11-11-2010	Simpson, et al.	
		US-2010/0298684	11-25-2010	Leach, et al.	
		US-2010/0324403	12-23-2010	Brister, et al.	
		US-2010/0331644	12-30-2010	Neale, et al.	
		US-2010/0331648	12-30-2010	Kamath, et al.	
		US-2010/0331651	12-30-2010	Groll	
		US-2010/0331656	12-30-2010	Mensinger, et al.	
		US-2010/0331657	12-30-2010	Mensinger, et al.	
		US-2011/0004085	01-06-2011	Mensinger, et al.	
		US-2011/0009727	01-13-2011	Mensinger, et al.	
		US-2011/0021889	01-27-2011	Hoss, et al.	
		US-2011/0024043	02-03-2011	Boock, et al.	
		US-2011/0024307	02-03-2011	Simpson, et al.	
		US-2011/0027127	02-03-2011	Simpson, et al.	
		US-2011/0027453	02-03-2011	Boock, et al.	
		US-2011/0027458	02-03-2011	Boock, et al.	
		US-2011/0028815	02-03-2011	Simpson, et al.	
		US-2011/0028816	02-03-2011	Simpson, et al.	
		US-2011/0046467	02-24-2011	Simpson, et al.	
		US-2011/0077469	03-31-2011	Blocker, et al.	
		US-2011/0077490	03-31-2011	Simpson, et al.	
		US-2011/0118579	05-19-2011	Goode, et al.	
		US-2011/0118580	05-19-2011	Goode, et al.	
		US-2011/0123971	05-26-2011	Berkowitz, et al.	
		US-2011/0124992	05-26-2011	Brauker, et al.	
		US-2011/0124997	05-26-2011	Goode, et al.	
		US-2011/0125410	05-26-2011	Goode, et al.	
		US-2011/0130970	06-02-2011	Goode, et al.	
		US-2011/0130971	06-02-2011	Goode, et al.	
		US-2011/0130998	06-02-2011	Goode, et al.	
		US-2011/0137571	06-09-2011	Power, et al.	
		US-2011/0144465	06-16-2011	Shults, et al.	
		US-2011/0148905	06-23-2011	Simmons, et al.	
		US-2011/0178378	07-21-2011	Brister, et al.	
		US-2011/0184752	07-28-2011	Ray, et al.	
		US-2011/0190614	08-04-2011	Brister, et al.	
		US-2011/0201910	08-18-2011	Rasdal, et al.	
		US-2011/0201911	08-18-2011	Johnson, et al.	
		US-2011/0208027	08-25-2011	Wagner, et al.	

EXAMINER **DATE CONSIDERED**

Substitute Disclosure Statement Form (PTO-1449)
* EXAMINER: Initial if reference considered, whether or not citation is in conformance with MPEP 609. Draw line through citation if not in conformance and not considered. Include copy of this form with next communication to applicant.1 Applicant's unique citation designation number (optional) 2 Applicant is to place a check mark here if English language Translation is attached

Substitute for form 1449/PTO **INFORMATION DISCLOSURE STATEMENT BY APPLICANT** *(Use as many sheets as necessary)*				*Complete if Known*	
				Application Number	13/925,694
				Filing Date	June 24, 2013
				First Named Inventor	Wesley Scott Harper, et al.
				Art Unit	1631
				Examiner Name	Not yet assigned
Sheet	20	of	26	Attorney Docket No: TS-02-180C01	

US PATENT DOCUMENTS					
Examiner Initials*	Cite No.	Document Number Number-Kind Code	Publication Date MM-DD-YYYY	Name of Patentee or Applicant of Cited Document	Pages, Columns, Lines, Where Relevant Passages or Relevant Figures Appear
		US-2011/0218414	09-08-2011	Kamath, et al.	
		US-2011/0231107	09-22-2011	Brauker, et al.	
		US-2011/0231140	09-22-2011	Goode, et al.	
		US-2011/0231141	09-22-2011	Goode, et al.	
		US-2011/0231142	09-22-2011	Goode, et al.	
		US-2011/0253533	10-20-2011	Shults, et al.	
		US-2011/0257895	10-20-2011	Brauker, et al.	
		US-2011/0263958	10-27-2011	Brauker, et al.	
		US-2011/0263959	10-27-2011	Young, et al.	
		US-2011/0264378	10-27-2011	Breton, et al.	
		US-2011/0270062	11-03-2011	Goode, et al.	
		US-2011/0270158	11-03-2011	Brauker, et al.	
		US-2011/0275919	11-10-2011	Petisce, et al.	
		US-2011/0290645	12-01-2011	Brister, et al.	
		US-2011/0313543	12-22-2011	Brauker, et al.	
		US-2011/0319739	12-29-2011	Kamath, et al.	
		US-2011/0320130	12-29-2011	Valdes, et al.	
		US-2012/0035445	02-09-2012	Boock, et al.	
		US-2012/0040101	02-16-2012	Tapsak, et al.	
		US-2012/0046534	02-23-2012	Simpson, et al.	
		US-2012/0078071	03-29-2012	Bohm, et al.	
		US-2012/0108934	05-03-2012	Valdes, et al.	

EXAMINER **DATE CONSIDERED**

Substitute Disclosure Statement Form (PTO-1449)
* EXAMINER: Initial if reference considered, whether or not citation is in conformance with MPEP 609. Draw line through citation if not in conformance and not considered. Include copy of this form with next communication to applicant.1 Applicant's unique citation designation number (optional) 2 Applicant is to place a check mark here if English language Translation is attached

Substitute for form 1449/PTO **INFORMATION DISCLOSURE STATEMENT BY APPLICANT** *(Use as many sheets as necessary)*				*Complete if Known*	
				Application Number	13/925,694
				Filing Date	June 24, 2013
				First Named Inventor	Wesley Scott Harper, et al.
				Art Unit	1631
				Examiner Name	Not yet assigned
Sheet	21	of	26	Attorney Docket No: TS-02-180C01	

FOREIGN PATENT DOCUMENTS						
Examiner Initials*	Cite No.	Foreign Patent Document Country Code-Number-Kind Code	Publication Date MM-DD-YYYY	Name of Patentee or Applicant of cited Document	Pages, Columns, Lines, Where Relevant Passages or RelevantFigures Appear	T[6]
		CA-2468577	06-05-2003	Phemi Inc.		
		CA-2617965	10-18-2011	Bayer HealthCare LLC		
		CA-2626349	09-20-2008	Lifescan, Inc.		
		CA-2678336	05-08-2008	Hoffmann La Roche		
		CA-2728831	07-22-2011	Lifescan, Inc.		
		DE-4401400	07-20-1995	Pfeiffer, Ernst		
		EP-0098592	01-18-1984	Fujisawa Pharmaceutical Co., Ltd.		
		EP-0127958	12-12-1984	Genetics International., Inc.		
		EP-0286118	01-25-1995	Nova Biomedical Corp.		
		EP-0320109	06-14-1989	Medisense, Inc.		
		EP-0353328	02-07-1990	PPG Heillige B.V.		
		EP-0390390	10-03-1990	Associated Universities, Inc. et al.		
		EP-0396788	11-14-1990	PPG Heillige B.V.		
		EP-1048264	11-02-2000	Medtronic, Inc.		
		EP-1725163	12-08-2010	e-San Ltd.		
		EP-2031534	03-04-2009	Lifescan, Inc.		
		WO-1996/025089	08-22-1996	Minimed Inc.		
		WO-1996/035370	11-14-1996	Massachusetts Institute of Technology		
		WO-1998/035053	08-13-1998	E. Heller & Co.		
		WO-1999/027849	06-10-1999	Roche Diagnostics Corp.		
		WO-1999/028736	06-10-1999	Roche Diagnostics Corp.		
		WO-1999/056613	11-11-1999	E. Heller & Co.		
		WO-2000/049940	08-31-2000	Minimed, Inc.		
		WO-2000/059370	10-12-2000	Cambridge University, Technical Services Limited		
		WO-2000/074753	12-14-2000	Minimed, Inc.		
		WO-2000/078992	12-28-2000	TheraSense, Inc.		
		WO-2001/052935	07-26-2001	Medical Research Group, Inc.		
		WO-2001/054753	08-02-2001	Medical Research Group, Inc.		
		WO-2002/016905	02-28-2002	Euro-Celtique, S.A.		
		WO-2002/058537	08-01-2002	TheraSense, Inc.		

EXAMINER **DATE CONSIDERED**

Substitute Disclosure Statement Form (PTO-1449)
* EXAMINER: Initial if reference considered, whether or not citation is in conformance with MPEP 609. Draw line through citation if not in conformance and not considered. Include copy of this form with next communication to applicant.1 Applicant's unique citation designation number (optional) 2 Applicant is to place a check mark here if English language Translation is attached

Under the Paperwork Reduction Act of 1995, no persons are required to respond to a collection of information unless it contains a valid OMB control number..

Substitute for form 1449/PTO **INFORMATION DISCLOSURE STATEMENT BY APPLICANT** *(Use as many sheets as necessary)*				*Complete if Known*	
				Application Number	13/925,694
				Filing Date	June 24, 2013
				First Named Inventor	Wesley Scott Harper, et al.
				Art Unit	1631
				Examiner Name	Not yet assigned
Sheet	22	of	26	Attorney Docket No: TS-02-180C01	

FOREIGN PATENT DOCUMENTS

Examiner Initials*	Cite No.	Foreign Patent Document Country Code-Number-Kind Code	Publication Date MM-DD-YYYY	Name of Patentee or Applicant of cited Document	Pages, Columns, Lines, Where Relevant Passages or RelevantFigures Appear	T[6]
		WO-2003/057027	07-17-2003	Medtronic MiniMed, Inc.		
		WO-2003/076893	09-18-2003	Sensys Medical, Inc.		
		WO-2003/082091	10-09-2003	Inverness Medical Limited		
		WO-2003/085372	10-16-2003	TheraSense, Inc.		
		WO-2004/060455	07-22-2004	Medtronic Minimed, Inc.		
		WO-2004/061420	07-22-2004	TheraSense, Inc.		
		WO-2005/041766	05-12-2005	TheraSense, Inc.		
		WO-2005/057175	06-23-2005	DexCom, Inc.		
		WO-2005/065538	07-21-2005	Medtronic MiniMed, Inc.		
		WO-2005/065542	07-21-2005	Medtronic Minimed, Inc.		
		WO-2005/089103	09-29-2005	TheraSense, Inc.		
		WO-2006/020212	02-23-2006	Medtronic MiniMed, Inc.		
		WO-2006/024671	03-09-2006	Novo Nordisk A/S		
		WO-2006/072035	07-06-2006	Lifescan Scotland Ltd.		
		WO-2006/079114	07-26-2006	Abbott Diabetes Care Inc.		
		WO-2006/118947	11-06-2006	Abbott Diabetes Care Inc.		
		WO-2007/016399	02-08-2007	Abbott Diabetes Care Inc.		
		WO-2007/019289	02-15-2007	Bayer HealthCare LLC		
		WO-2007/027788	03-08-2007	Abbott Diabetes Care Inc.		
		WO-2007/041069	04-12-2007	Abbott Diabetes Care Inc.		
		WO-2007/041070	04-12-2007	Abbott Diabetes Care Inc.		
		WO-2007/041248	04-12-2007	Abbott Diabetes Care Inc.		
		WO-2007/053832	12-06-2007	Abbott Diabetes Care Inc.		
		WO-2007/056638	05-18-2007	Abbott Diabetes Care Inc.		
		WO-2007/101223	09-07-2007	Abbott Diabetes Care Inc.		
		WO-2007/120363	10-25-2007	Abbott Diabetes Care Inc.		
		WO-2007/126444	11-08-2007	Abbott Diabetes Care Inc.		
		WO-2007/143225	12-13-2007	Abbott Diabetes Care Inc.		
		WO-2008/021913	02-21-2008	Abbott Diabetes Care Inc.		
		WO-2008/042760	04-10-2008	Abbott Diabetes Care Inc.		
		WO-2008/048452	04-24-2008	Medtronic MiniMed, Inc.		
		WO-2008/052374	05-08-2008	Roche Diagnostics GmbH		

EXAMINER **DATE CONSIDERED**

Substitute Disclosure Statement Form (PTO-1449)
* EXAMINER: Initial if reference considered, whether or not citation is in conformance with MPEP 609. Draw line through citation if not in conformance and not considered. Include copy of this form with next communication to applicant.1 Applicant's unique citation designation number (optional) 2 Applicant is to place a check mark here if English language Translation is attached

Under the Paperwork Reduction Act of 1995, no persons are required to respond to a collection of information unless it contains a valid OMB control number..

Substitute for form 1449/PTO **INFORMATION DISCLOSURE STATEMENT BY APPLICANT** *(Use as many sheets as necessary)*				*Complete if Known*	
				Application Number	13/925,694
				Filing Date	June 24, 2013
				First Named Inventor	Wesley Scott Harper, et al.
				Art Unit	1631
				Examiner Name	Not yet assigned
Sheet	23	of	26	Attorney Docket No: TS-02-180C01	

FOREIGN PATENT DOCUMENTS						
Examiner Initials*	Cite No.	Foreign Patent Document Country Code-Number-Kind Code	Publication Date MM-DD-YYYY	Name of Patentee or Applicant of cited Document	Pages, Columns, Lines, Where Relevant Passages or RelevantFigures Appear	T[6]
		WO-2008/062099	05-29-2008	Koski, Salla		
		WO-2008/086541	07-17-2008	Medtronic Minimed, Inc.		
		WO-2008/128210	10-23-2008	Abbott Diabetes Care Inc.		
		WO-2008/130896	10-30-2008	Abbott Diabetes Care Inc.		
		WO-2008/130897	10-30-2008	Abbott Diabetes Care Inc.		
		WO-2008/130898	10-30-2008	Abbott Diabetes Care Inc.		
		WO-2008/143943	11-27-2008	Abbott Diabetes Care Inc.		
		WO-2008/144445	11-27-2008	iSense Corporation		
		WO-2009/018058	02-05-2009	Abbott Diabetes Care Inc.		
		WO-2009/086216	07-09-2009	Abbott Diabetes Care Inc.		
		WO-2009/096992	08-06-2009	Abbott Diabetes Care Inc.		
		WO-2009/097594	08-06-2009	Abbott Diabetes Care Inc.		
		WO-2010/062898	06-03-2010	University of Virginia		
		WO-2011/000528	01-06-2011	Roche Diagnostics GmbH		
		WO-2011/104616	09-01-2011	Roche Diagnostics GmbH		

EXAMINER **DATE CONSIDERED**

Substitute Disclosure Statement Form (PTO-1449)
* EXAMINER: Initial if reference considered, whether or not citation is in conformance with MPEP 609. Draw line through citation if not in conformance and not considered. Include copy of this form with next communication to applicant.1 Applicant's unique citation designation number (optional) 2 Applicant is to place a check mark here if English language Translation is attached

Under the Paperwork Reduction Act of 1995, no persons are required to respond to a collection of information unless it contains a valid OMB control number..

Substitute for form 1449/PTO **INFORMATION DISCLOSURE STATEMENT BY APPLICANT** *(Use as many sheets as necessary)*				*Complete if Known*	
				Application Number	13/925,694
				Filing Date	June 24, 2013
				First Named Inventor	Wesley Scott Harper, et al.
				Art Unit	1631
				Examiner Name	Not yet assigned
Sheet	24	of	26	Attorney Docket No: TS-02-180C01	

NON PATENT LITERATURE DOCUMENTS			
Examiner Initials*	Cite No.	Include name of the author (in CAPITAL LETTERS), title of the article (when appropriate), title of the item (book, magazine, journal, serial, symposium, catalog, etc.), date, page(s), volume-issue number(s), publisher, city and/or country where published.	T[2]
		ARMOUR, J. C., et al., "Application of Chronic Intravascular Blood Glucose Sensor in Dogs", Diabetes, Vol. 39, 1990, pp. 1519-1526.	
		BENNION, N., et al., "Alternate Site Glucose Testing: A Crossover Design", Diabetes Technology & Therapeutics, Vol. 4, No. 1, 2002, pp. 25-33.	
		BLANK, T. B., et al., "Clinical Results From a Non-Invasive Blood Glucose Monitor", Optical Diagnostics and Sensing of Biological Fluids and Glucose and Cholesterol Monitoring II, Proceedings of SPIE, Vol. 4624, 2002, pp. 1-10.	
		BROOKS, S. L., et al., "Development of an On-Line Glucose Sensor for Fermentation Monitoring", Biosensors, Vol. 3, 1987/88, pp. 45-56.	
		CASS, A. E., et al., "Ferrocene-Medicated Enzyme Electrode for Amperometric Determination of Glucose", Analytical Chemistry, Vol. 56, No. 4, 1984, 667-671.	
		CSOREGI, E., et al., "Design and Optimization of a Selective Subcutaneously Implantable Glucose Electrode Based on 'Wired' Glucose Oxidase", Analytical Chemistry, Vol. 67, No. 7, 1995, pp. 1240-1244.	
		EL-KHATIB, F. H, et al., "Adaptive Closed-Loop Control Provides Blood-Glucose Regulation Using Subcutaneous Insulin and Glucagon Infusion in Diabetic Swine", Journal of Diabetes Science and Technology, Vol. 1, No. 2, 2007, pp. 181-192.	
		FELDMAN, B., et al., "A Continuous Glucose Sensor Based on Wired Enzyme™ Technology - Results from a 3-Day Trial in Patients with Type 1 Diabetes", Diabetes Technology & Therapeutics, Vol. 5, No. 5, 2003, pp. 769-779.	
		FELDMAN, B., et al., "Correlation of Glucose Concentrations in Interstitial Fluid and Venous Blood During Periods of Rapid Glucose Change", Abbott Diabetes Care, Inc. Freestyle Navigator Continuous Glucose Monitor Pamphlet, 2004.	
		ISERMANN, R., "Supervision, Fault-Detection and Fault-Diagnosis Methods – An Introduction", Control Engineering Practice, Vol. 5, No. 5, 1997, pp. 639-652.	
		ISERMANN, R., et al., "Trends in the Application of Model-Based Fault Detection and Diagnosis of Technical Processes", Control Engineering Practice, Vol. 5, No. 5, 1997, pp. 709-719.	
		JOHNSON, P. C., "Peripheral Circulation", John Wiley & Sons, 1978, pp. 198.	
		JUNGHEIM, K., et al., "How Rapid Does Glucose Concentration Change in Daily Life of Patients with Type 1 Diabetes?", 2002, pp. 250.	
		JUNGHEIM, K., et al., "Risky Delay of Hypoglycemia Detection by Glucose Monitoring at the Arm", Diabetes Care, Vol. 24, No. 7, 2001, pp. 1303-1304.	
		KAPLAN, S. M., "Wiley Electrical and Electronics Engineering Dictionary", IEEE Press, 2004, pp. 141, 142, 548, 549.	
		LORTZ, J., et al., "What is Bluetooth? We Explain The Newest Short-Range Connectivity Technology", Smart Computing Learning Series, Wireless Computing, Vol. 8, Issue 5, 2002, pp. 72-74.	
		MALIN, S. F., et al., "Noninvasive Prediction of Glucose by Near-Infrared Diffuse Reflectance Spectoscopy", Clinical Chemistry, Vol. 45, No. 9, 1999, pp. 1651-1658.	

EXAMINER **DATE CONSIDERED**

Substitute Disclosure Statement Form (PTO-1449)
* EXAMINER: Initial if reference considered, whether or not citation is in conformance with MPEP 609. Draw line through citation if not in conformance and not considered. Include copy of this form with next communication to applicant.1 Applicant's unique citation designation number (optional) 2 Applicant is to place a check mark here if English language Translation is attached

Under the Paperwork Reduction Act of 1995, no persons are required to respond to a collection of information unless it contains a valid OMB control number..

Substitute for form 1449/PTO **INFORMATION DISCLOSURE STATEMENT BY APPLICANT** *(Use as many sheets as necessary)*				*Complete if Known*	
				Application Number	13/925,694
				Filing Date	June 24, 2013
				First Named Inventor	Wesley Scott Harper, et al.
				Art Unit	1631
				Examiner Name	Not yet assigned
Sheet	25	of	26	Attorney Docket No: TS-02-180C01	

NON PATENT LITERATURE DOCUMENTS			
Examiner Initials*	Cite No.	Include name of the author (in CAPITAL LETTERS), title of the article (when appropriate), title of the item (book, magazine, journal, serial, symposium, catalog, etc.), date, page(s), volume-issue number(s), publisher, city and/or country where published.	T[2]
		MCGARRAUGH, G., et al., "Glucose Measurements Using Blood Extracted from the Forearm and the Finger", TheraSense, Inc., 2001, 16 Pages.	
		MCGARRAUGH, G., et al., "Physiological Influences on Off-Finger Glucose Testing", Diabetes Technology & Therapeutics, Vol. 3, No. 3, 2001, pp. 367-376.	
		MCKEAN, B. D., et al., "A Telemetry-Instrumentation System for Chronically Implanted Glucose and Oxygen Sensors", IEEE Transactions on Biomedical Engineering, Vol. 35, No. 7, 1988, pp. 526-532.	
		PICKUP, J., et al., "Implantable Glucose Sensors: Choosing the Appropriate Sensing Strategy", Biosensors, Vol. 3, 1987/88, pp. 335-346.	
		PICKUP, J., et al., "In Vivo Molecular Sensing in Diabetes Mellitus: An Implantable Glucose Sensor with Direct Electron Transfer", Diabetologia, Vol. 32, 1989, pp. 213-217.	
		PISHKO, M. V., et al., "Amperometric Glucose Microelectrodes Prepared Through Immobilization of Glucose Oxidase in Redox Hydrogels", Analytical Chemistry, Vol. 63, No. 20, 1991, pp. 2268-2272.	
		QUINN, C. P., et al., "Kinetics of Glucose Delivery to Subcutaneous Tissue in Rats Measured with 0.3-mm Amperometric Microsensors", The American Physiological Society, 1995, E155-E161.	
		ROE, J. N., et al., "Bloodless Glucose Measurements", Critical Review in Therapeutic Drug Carrier Systems, Vol. 15, Issue 3, 1998, pp. 199-241.	
		SAKAKIDA, M., et al., "Development of Ferrocene-Mediated Needle-Type Glucose Sensor as a Measure of True Subcutaneous Tissue Glucose Concentrations", Artificial Organs Today, Vol. 2, No. 2, 1992, pp. 145-158.	
		SAKAKIDA, M., et al., "Ferrocene-Mediated Needle-Type Glucose Sensor Covered with Newly Designed Biocompatible Membrane", Sensors and Actuators B, Vol. 13-14, 1993, pp. 319-322.	
		SALEHI, C., et al., "A Telemetry-Instrumentation System for Long-Term Implantable Glucose and Oxygen Sensors", Analytical Letters, Vol. 29, No. 13, 1996, pp. 2289-2308.	
		SCHMIDTKE, D. W., et al., "Measurement and Modeling of the Transient Difference Between Blood and Subcutaneous Glucose Concentrations in the Rat After Injection of Insulin", Proceedings of the National Academy of Sciences, Vol. 95, 1998, pp. 294-299.	
		SHAW, G. W., et al., "In Vitro Testing of a Simply Constructed, Highly Stable Glucose Sensor Suitable for Implantation in Diabetic Patients", Biosensors & Bioelectronics, Vol. 6, 1991, pp. 401-406.	
		SHICHIRI, M., et al., "Glycaemic Control in Pancreatectomized Dogs with a Wearable Artificial Endocrine Pancreas", Diabetologia, Vol. 24, 1983, pp. 179-184.	
		SHICHIRI, M., et al., "In Vivo Characteristics of Needle-Type Glucose Sensor - Measurements of Subcutaneous Glucose Concentrations in Human Volunteers", Hormone and Metabolic Research Supplement Series, Vol. 20, 1988, pp. 17-20.	
		SHICHIRI, M., et al., "Membrane Design for Extending the Long-Life of an Implantable Glucose Sensor", Diabetes Nutrition and Metabolism, Vol. 2, 1989, pp. 309-313.	

EXAMINER **DATE CONSIDERED**

Substitute Disclosure Statement Form (PTO-1449)
* EXAMINER: Initial if reference considered, whether or not citation is in conformance with MPEP 609. Draw line through citation if not in conformance and not considered. Include copy of this form with next communication to applicant.1 Applicant's unique citation designation number (optional) 2 Applicant is to place a check mark here if English language Translation is attached

Under the Paperwork Reduction Act of 1995, no persons are required to respond to a collection of information unless it contains a valid OMB control number..

Substitute for form 1449/PTO **INFORMATION DISCLOSURE STATEMENT BY APPLICANT** *(Use as many sheets as necessary)*				*Complete if Known*	
				Application Number	13/925,694
				Filing Date	June 24, 2013
				First Named Inventor	Wesley Scott Harper, et al.
				Art Unit	1631
				Examiner Name	Not yet assigned
Sheet	26	of	26	Attorney Docket No: TS-02-180C01	

NON PATENT LITERATURE DOCUMENTS			
Examiner Initials*	Cite No.	Include name of the author (in CAPITAL LETTERS), title of the article (when appropriate), title of the item (book, magazine, journal, serial, symposium, catalog, etc.), date, page(s), volume-issue number(s), publisher, city and/or country where published.	T[2]
		SHICHIRI, M., et al., "Needle-type Glucose Sensor for Wearable Artificial Endocrine Pancreas", Implantable Sensors for Closed-Loop Prosthetic Systems, Chapter 15, 1985, pp. 197-210.	
		SHICHIRI, M., et al., "Telemetry Glucose Monitoring Device With Needle-Type Glucose Sensor: A Useful Tool for Blood Glucose Monitoring in Diabetic Individuals", Diabetes Care, Vol. 9, No. 3, 1986, pp. 298-301.	
		SHICHIRI, M., et al., "Wearable Artificial Endocrine Pancreas With Needle-Type Glucose Sensor", The Lancet, 1982, pp. 1129-1131.	
		SHULTS, M. C., et al., "A Telemetry-Instrumentation System for Monitoring Multiple Subcutaneously Implanted Glucose Sensors", IEEE Transactions on Biomedical Engineering, Vol. 41, No. 10, 1994, pp. 937-942.	
		STERNBERG, R., et al., "Study and Development of Multilayer Needle-Type Enzyme-Based Glucose Microsensors", Biosensors, Vol. 4, 1988, pp. 27-40.	
		THOMPSON, M., et al., "In Vivo Probes: Problems and Perspectives", Clinical Biochemistry, Vol. 19, 1986, pp. 255-261.	
		TURNER, A., et al., "Diabetes Mellitus: Biosensors for Research and Management", Biosensors, Vol. 1, 1985, pp. 85-115.	
		UPDIKE, S. J., et al., "Principles of Long-Term Fully Implanted Sensors with Emphasis on Radiotelemetric Monitoring of Blood Glucose from Inside a Subcutaneous Foreign Body Capsule (FBC)", Biosensors in the Body: Continuous in vivo Monitoring, Chapter 4, 1997, pp. 117-137.	
		VELHO, G., et al., "Strategies for Calibrating a Subcutaneous Glucose Sensor", Biomedica Biochimica Acta, Vol. 48, 1989, pp. 957-964.	
		WILSON, G. S., et al., "Progress Toward the Development of an Implantable Sensor for Glucose", Clinical Chemistry, Vol. 38, No. 9, 1992, pp. 1613-1617.	
		PCT Application No. PCT/US2010/032863, International Preliminary Report on Patentability and Written Opinion of the International Searching Authority mailed November 11, 2011.	
		PCT Application No. PCT/US2010/032863, International Search Report and Written Opinion of the International Searching Authority mailed July 7, 2010.	
		U.S. Patent Application No. 12/769,635, Notice of Allowance March 4, 2013.	
		U.S. Patent Application No. 12/769,635, Office Action May 24, 2012.	
		U.S. Patent Application No. 12/769,635, Office Action November 8, 2012.	

EXAMINER **DATE CONSIDERED**

* EXAMINER: Initial if reference considered, whether or not citation is in conformance with MPEP 609. Draw line through citation if not in conformance and not considered. Include copy of this form with next communication to applicant.1 Applicant's unique citation designation number (optional) 2 Applicant is to place a check mark here if English language Translation is attached

Electronic Acknowledgement Receipt

EFS ID:	17013684
Application Number:	13925694
International Application Number:	
Confirmation Number:	8030
Title of Invention:	Method and System for Providing Real Time Analyte Sensor Calibration with Retrospective Backfill
First Named Inventor/Applicant Name:	Wesley Scott Harper
Customer Number:	30349
Filer:	Seong-Kun Oh
Filer Authorized By:	
Attorney Docket Number:	TS-02-180C01
Receipt Date:	01-OCT-2013
Filing Date:	24-JUN-2013
Time Stamp:	23:29:05
Application Type:	Utility under 35 USC 111(a)

Payment information:

Submitted with Payment	no

File Listing:

Document Number	Document Description	File Name	File Size(Bytes)/ Message Digest	Multi Part /.zip	Pages (if appl.)
1		TS-02-180C01-IDS.pdf	223093 346ee2d7137d3b8f6f0b677db9b0b8e2e63e5999	yes	28

	Multipart Description/PDF files in .zip description		
	Document Description	**Start**	**End**
	Transmittal Letter	1	2
	Information Disclosure Statement (IDS) Form (SB08)	3	28

Warnings:					
Information:					
2	Foreign Reference	WO2000-074753.pdf	3884584 9523f1fdaa822fc22e8a93b2e93533f1bf55ec8c	no	115
Warnings:					
Information:					
3	Foreign Reference	WO2004-060455.pdf	4561837 75aaa660344f75ed708520f92fca252b4ddc7af4	no	128
Warnings:					
Information:					
4	Foreign Reference	WO2005-065542.pdf	3314505 b25a36818899665ea6a2f26bc0b81fd059e26ae9	no	76
Warnings:					
Information:					
5	Foreign Reference	WO2008-086541.pdf	1622151 04b7ed156a82e97787d80e002c37abec106de901	no	44
Warnings:					
Information:					
6	Other Reference-Patent/App/Search documents	12769635-Notice-of-Allowance-03-04-13.pdf	373657 7c26a9ccf4a7720c4f1e01ce865ff2a5d73196b1	no	7
Warnings:					
Information:					
7	Other Reference-Patent/App/Search documents	12769635-Office-Action-05-24-12.pdf	304363 b969b61aae0fad4f9dca5dc7e8b9c5db1ef521ac	no	8
Warnings:					
Information:					
8	Other Reference-Patent/App/Search documents	12769635-Office-Action-11-08-12.pdf	370244 466518102f52fefb05be2f0ad8b75784591cef77	no	10
Warnings:					
Information:					
		Total Files Size (in bytes):	14654434		

This Acknowledgement Receipt evidences receipt on the noted date by the USPTO of the indicated documents, characterized by the applicant, and including page counts, where applicable. It serves as evidence of receipt similar to a Post Card, as described in MPEP 503.

New Applications Under 35 U.S.C. 111
If a new application is being filed and the application includes the necessary components for a filing date (see 37 CFR 1.53(b)-(d) and MPEP 506), a Filing Receipt (37 CFR 1.54) will be issued in due course and the date shown on this Acknowledgement Receipt will establish the filing date of the application.

National Stage of an International Application under 35 U.S.C. 371
If a timely submission to enter the national stage of an international application is compliant with the conditions of 35 U.S.C. 371 and other applicable requirements a Form PCT/DO/EO/903 indicating acceptance of the application as a national stage submission under 35 U.S.C. 371 will be issued in addition to the Filing Receipt, in due course.

New International Application Filed with the USPTO as a Receiving Office
If a new international application is being filed and the international application includes the necessary components for an international filing date (see PCT Article 11 and MPEP 1810), a Notification of the International Application Number and of the International Filing Date (Form PCT/RO/105) will be issued in due course, subject to prescriptions concerning national security, and the date shown on this Acknowledgement Receipt will establish the international filing date of the application.

INFORMATION DISCLOSURE STATEMENT BY APPLICANT *(Use as many sheets as necessary)*				*Complete if Known*	
				Application Number	13/925,694
				Filing Date	June 24, 2013
				First Named Inventor	Wesley Scott Harper, et al.
				Art Unit	1631
				Examiner Name	Not yet assigned
Sheet	1		2	Attorney Docket Number	TS-02-180C01

Commissioner for Patents
P. O. Box 1450
Alexandria, VA 22313-1450

Dear Sir:

In accordance with the provisions of 37 C.F.R. §1.56(a) and 37 C.F.R. §1.97, Applicant(s) hereby make of record the references listed on the accompanying form, SB/08A and/or SB/08b for consideration by the Examiner in connection with the examination of the above-identified patent application.

This Information Disclosure Statement:

(a) accompanies a new patent application submitted herewith.

(b) X is filed within three (3) months of the Filing Date or before the mailing date of a First Office Action on the merits or before the mailing date of a First Office Action after the filing of a Request for Continued Examination; **OR**

(c) is filed after the first Office Action and more than three months after the application's filing date or PCT national stage date of entry filing but, as far as is known to the undersigned prior to the mailing date of either a final rejection or a notice of allowance, and is accompanied by either the fee ($180) set forth in 37 CFR §1.17(p) or a certification as specified in 37 CFR §1.97(e), as checked below **OR**

(d) is filed after the mailing date of either a final rejection or a notice of allowance, and the issue fee has not been paid, and is accompanied by the requisite fee ($180) set forth in 37 CFR §1.17(p) and a certification as specified in 37 CFR §1.97(e), as checked below. This document is to be considered as a petition requesting consideration of the information disclosure statement.

As required under §1.97(e), Applicants, through the undersigned, hereby state either that [check the appropriate space]:

(e) Each item of information contained in the Information Disclosure Statement was first cited in a communication from a foreign patent office in a counterpart foreign application not more than three months prior to the filing date of the Information Disclosure Statement; or

(f) No item of information contained in the Information Disclosure Statement was cited in a communication from a foreign patent office in a counterpart foreign application, and, to the knowledge of the person signing this Statement after making reasonable inquiry, no item of information contained in the Information Disclosure Statement was known to any individual designated in §1.56(c) more than three months prior to the filing of the Information Disclosure Statement.

This application is a continuation application of US patent application no. 12/769,635 now US patent no. 8,483,967.

Each item of information listed in the attached FORM PTO/SB/08a and/or SB/08b may be material to the examination of the above-identified application and is, therefore, submitted in compliance with the duty of disclosure defined in 37 CFR §1.56, §1.97 and §1.98. The Examiner is requested to make these items of official record in this application.

INFORMATION DISCLOSURE STATEMENT BY APPLICANT *(Use as many sheets as necessary)*				Complete if Known	
				Application Number	13/925,694
				Filing Date	June 24, 2013
				First Named Inventor	Wesley Scott Harper, et al.
				Art Unit	1631
				Examiner Name	Not yet assigned
Sheet	2		2	Attorney Docket Number	TS-02-180C01

Pursuant to notice entitled "Information Disclosure Statements May Be Filed Without Copies Of U.S. Patents and Published Applications in Patent Applications filed after June 30, 2003," *Off. Gaz. Pat. Office 55* (August 5, 2003), no copies of U.S. Patents and U.S. Published Patent Applications are being supplied with this Information Disclosure Statement.

This Information Disclosure Statement under 37 CFR §1.56, §1.97 and §1.98 is not to be construed as a representation that a search has been made, that additional information material to the examination of this application does not exist, or that any one or more of these items constitutes prior art.

If this statement crosses in the mail with an office action, or is otherwise not in the indicated category of 37 C.F.R. §1.97, it is respectfully requested that this statement be treated in the next appropriate category and made of record. To the extent required, please treat this submission as a conditional petition for acceptance of the information disclosure statement.

The Commissioner is authorized to charge any deficiencies and credit any overpayment of fees to our Deposit Account No. 50-2019.

Respectfully submitted,

Date: October 1, 2013

Jackson & Co., LLP®

/Seong-Kun Oh/

By: Seong-Kun Oh
Reg. No. 48,210
Attorneys for Applicant(s)
6114 La Salle Ave., #507
Oakland, CA 94611-2802
Tel. 510-652-6418
Fax. 510-652-5691

X *Customer Number or Bar Code Label* 30349
(Insert Customer No. or Attach bar code label here)

CERTIFICATE OF TRANSMISSION/MAILING

I hereby certify that this correspondence is being facsimile transmitted to the United States Patent Office, number 1-571-273-8300, or deposited with the United States Postal Service with sufficient postage as first class mail in an envelope, or filed electronically and addressed to: Commissioner for Patents, P.O. Box 1450, Alexandria, VA 22313-1450.

October 1, 2013 /Seong-Kun Oh/
Date *Seong-Kun Oh*

CERTIFICATE OF TRANSMISSION/MAILING

I hereby certify that this correspondence is being facsimile transmitted to the United States Patent Office, number 1-571-273-8300, or deposited with the United States Postal Service with sufficient postage as first class mail in an envelope, or filed electronically and addressed to: Commissioner for Patents, P.O. Box 1450, Alexandria, VA 22313-1450, on **September 11, 2013**.

/Seong-Kun Oh/

Seong-Kun Oh

IN THE UNITED STATES PATENT AND TRADEMARK OFFICE

Application No.	:	13/925,694	Confirmation No. 8030
Inventor	:	Wesley Scott Harper	
Filed	:	June 24, 2013	
TC/A.U.	:	1631	
Examiner	:	Not Yet Assigned	
Docket No.	:	TS-02-180C01	
Customer No.	:	30349	

Title: Method and System for Providing Real Time Analyte Sensor Calibration with Retrospective Backfill

Commissioner for Patents
P.O. Box 1450
Alexandria, VA 22313-1450

SUBMISSION OF DECLARATION

Sir:

Submitted herewith is the Executed Declaration for Utility Patent Application (37 CFR 1.63).

The surcharge for submitting the Declaration after the initial filing was paid on June 24, 2013. The Commissioner is authorized to charge any deficiencies in fees and credit any overpayment of fees to Deposit Account No. 50-2019.

Respectfully submitted,

JACKSON & CO., LLP®

Dated: September 11, 2013 By: /Seong-Kun Oh/

Seong-Kun Oh
Reg. No. 48,210
Attorneys for Applicant(s)

JACKSON & CO., LLP®
6114 La Salle Ave., #507
Oakland, CA 94611-2802

Telephone: 510-652-6418
Facsimile: 510-652-5691

Customer No.: 30349

PTO/AIA/08 (06-12)
Approved for use through 01/31/2014. OMB 0651-0032
U.S. Patent and Trademark Office; U.S. DEPARTMENT OF COMMERCE

Under the Paperwork Reduction Act of 1995, no persons are required to respond to a collection of information unless it contains a valid OMB control number.

DECLARATION FOR UTILITY OR DESIGN PATENT APPLICATION (37 CFR 1.63)

☐ Declaration Submitted With Initial Filing OR ■ Declaration Submitted After Initial Filing (surcharge (37 CFR 1.16(f)) required)

Attorney Docket Number	TS-02-180C01
First Named Inventor	Wesley Scott Harper
COMPLETE IF KNOWN	
Application Number	13/925,694
Filing Date	June 24, 2013
Art Unit	1631
Examiner Name	Not Yet Assigned

Method and System for Providing Real Time Analyte Sensor Calibration with Retrospective Backfill

(Title of the Invention)

As a below named inventor, I hereby declare that:

This declaration is directed to:

☐ The attached application,

OR

■ United States Application Number or PCT International application number 13/925,694 filed on June 24, 2013.

The above-identified application was made or authorized to be made by me.

I believe I am the original inventor or an original joint inventor of a claimed invention in the application.

I hereby acknowledge that any willful false statement made in this declaration is punishable under 18 U.S.C. 1001 by fine or imprisonment of not more than five (5) years, or both.

Authorization To Permit Access To Application by Participating Office

|✓| If checked, the undersigned hereby grants the USPTO authority to provide the European Patent Office (EPO), the Japan Patent Office (JPO), the Korean Intellectual Property Office (KIPO), the World Intellectual Property Office (WIPO), and any other intellectual property offices in which a foreign application claiming priority to the above-identified patent application is filed access to the above-identified patent application. See 37 CFR 1.14(c) and (h). This box should not be checked if the applicant does not wish the EPO, JPO, KIPO, WIPO, or other intellectual property office in which a foreign application claiming priority to the above-identified patent application is filed to have access to the above-identified patent application.

In accordance with 37 CFR 1.14(h)(3), access will be provided to a copy of the above-identified patent application with respect to: 1) the above-identified patent application-as-filed; 2) any foreign application to which the above-identified patent application claims priority under 35 U.S.C. 119(a)-(d) if a copy of the foreign application that satisfies the certified copy requirement of 37 CFR 1.55 has been filed in the above-identified patent application; and 3) any U.S. application-as-filed from which benefit is sought in the above-identified patent application.

In accordance with 37 CFR 1.14(c), access may be provided to information concerning the date of filing the Authorization to Permit Access to Application by Participating Offices.

This collection of information is required by 35 U.S.C. 115 and 37 CFR 1.63. The information is required to obtain or retain a benefit by the public which is to file (and by the USPTO to process) an application. Confidentiality is governed by 35 U.S.C. 122 and 37 CFR 1.11 and 1.14. This collection is estimated to take 21 minutes to complete, including gathering, preparing, and submitting the completed application form to the USPTO. Time will vary depending upon the individual case. Any comments on the amount of time you require to complete this form and/or suggestions for reducing this burden, should be sent to the Chief Information Officer, U.S. Patent and Trademark Office, U.S. Department of Commerce, P.O. Box 1450, Alexandria, VA 22313-1450. DO NOT SEND FEES OR COMPLETED FORMS TO THIS ADDRESS. **SEND TO: Commissioner for Patents, P.O. Box 1450, Alexandria, VA 22313-1450.**

If you need assistance in completing the form, call 1-800-PTO-9199 and select option 2.

Under the Paperwork Reduction Act of 1995, no persons are required to respond to a collection of information unless it contains a valid OMB control number.

DECLARATION — Utility or Design Patent Application

Direct all correspondence to:	☒ The address associated with Customer Number:	30349	OR	☐ Correspondence address below

Name		
Address		
City	State	Zip
Country	Telephone	Email

WARNING:

Petitioner/applicant is cautioned to avoid submitting personal information in documents filed in a patent application that may contribute to identity theft. Personal information such as social security numbers, bank account numbers, or credit card numbers (other than a check or credit card authorization form PTO-2038 submitted for payment purposes) is never required by the USPTO to support a petition or an application. If this type of personal information is included in documents submitted to the USPTO, petitioners/applicants should consider redacting such personal information from the documents before submitting them to the USPTO. Petitioner/applicant is advised that the record of a patent application is available to the public after publication of the application (unless a non-publication request in compliance with 37 CFR 1.213(a) is made in the application) or issuance of a patent. Furthermore, the record from an abandoned application may also be available to the public if the application is referenced in a published application or an issued patent (see 37 CFR 1.14). Checks and credit card authorization forms PTO-2038 submitted for payment purposes are not retained in the application file and therefore are not publicly available. Petitioner/applicant is advised that documents which form the record of a patent application (such as the PTO/SB/01) are placed into the Privacy Act system of records DEPARTMENT OF COMMERCE, COMMERCE-PAT-7, System name: *Patent Application Files* . Documents not retained in an application file (such as the PTO-2038) are placed into the Privacy Act system of COMMERCE/PAT-TM-10, System name: *Deposit Accounts and Electronic Funds Transfer Profiles* .

LEGAL NAME OF SOLE OR FIRST INVENTOR:

(*E.g.*, Given Name (first and middle (if any)) and Family Name or Surname)

Wesley Scott Harper

Inventor's Signature		Date (Optional)	
		31 Jul 2013	
Residence: City	State	Country	
Alameda	CA	US	
Mailing Address			
15 Ferro Court			
City	State	Zip	Country
Alameda	CA	94502	US

☐ Additional inventors are being named on the _____ supplemental sheet(s) PTO/AIA/10 attached hereto

Electronic Acknowledgement Receipt

EFS ID:	16828091
Application Number:	13925694
International Application Number:	
Confirmation Number:	8030
Title of Invention:	Method and System for Providing Real Time Analyte Sensor Calibration with Retrospective Backfill
First Named Inventor/Applicant Name:	Wesley Scott Harper
Customer Number:	30349
Filer:	Seong-Kun Oh
Filer Authorized By:	
Attorney Docket Number:	TS-02-180C01
Receipt Date:	11-SEP-2013
Filing Date:	24-JUN-2013
Time Stamp:	18:59:49
Application Type:	Utility under 35 USC 111(a)

Payment information:

Submitted with Payment	no

File Listing:

Document Number	Document Description	File Name	File Size(Bytes)/ Message Digest	Multi Part /.zip	Pages (if appl.)
1	Transmittal Letter	TS-02-180C01-General-Transmittal.pdf	62520 5337b4f77f3a29adbdc558dd20289bf8826d1cfe	no	2

Warnings:

Information:

2	Miscellaneous Incoming Letter	TS-02-180C01-Submission-of-Declaration-as-filed.pdf	59777 be810f3dfb03d263c20c3f23b607ea270527c013	no	2
Warnings:					
Information:					
3	Oath or Declaration filed	TS-02-180C01-Executed-Declaration.pdf	420672 a0cf49943ab7efff76abb45870de4d5d28a3906d	no	2
Warnings:					
Information:					
		Total Files Size (in bytes):	542969		

This Acknowledgement Receipt evidences receipt on the noted date by the USPTO of the indicated documents, characterized by the applicant, and including page counts, where applicable. It serves as evidence of receipt similar to a Post Card, as described in MPEP 503.

<u>New Applications Under 35 U.S.C. 111</u>
If a new application is being filed and the application includes the necessary components for a filing date (see 37 CFR 1.53(b)-(d) and MPEP 506), a Filing Receipt (37 CFR 1.54) will be issued in due course and the date shown on this Acknowledgement Receipt will establish the filing date of the application.

<u>National Stage of an International Application under 35 U.S.C. 371</u>
If a timely submission to enter the national stage of an international application is compliant with the conditions of 35 U.S.C. 371 and other applicable requirements a Form PCT/DO/EO/903 indicating acceptance of the application as a national stage submission under 35 U.S.C. 371 will be issued in addition to the Filing Receipt, in due course.

<u>New International Application Filed with the USPTO as a Receiving Office</u>
If a new international application is being filed and the international application includes the necessary components for an international filing date (see PCT Article 11 and MPEP 1810), a Notification of the International Application Number and of the International Filing Date (Form PCT/RO/105) will be issued in due course, subject to prescriptions concerning national security, and the date shown on this Acknowledgement Receipt will establish the international filing date of the application.

CERTIFICATE OF TRANSMISSION/MAILING

I hereby certify that this correspondence is being facsimile transmitted to the United States Patent Office, number 1-571-273-8300, or deposited with the United States Postal Service with sufficient postage as first class mail in an envelope, or filed electronically and addressed to: Commissioner for Patents, P.O. Box 1450, Alexandria, VA 22313-1450, on **September 11, 2013**.

/Seong-Kun Oh/
Seong-Kun Oh

IN THE UNITED STATES PATENT AND TRADEMARK OFFICE

Application No.	:	13/925,694	Confirmation No.	8030
Inventor	:	Wesley Scott Harper		
Filed	:	June 24, 2013		
TC/A.U.	:	1631		
Examiner	:	Not Yet Assigned		
Docket No.	:	TS-02-180C01		
Customer No.	:	30349		

Title: Method and System for Providing Real Time Analyte Sensor Calibration with Retrospective Backfill

Commissioner for Patents
P.O. Box 1450
Alexandria, VA 22313-1450

TRANSMITTAL

Sir:

Enclosed please find the following:

1. Transmittal (In Duplicate);
2. Submission of Declaration (2 Pages);
3. Declaration (2 Pages);
4. Certificate of Transmission (In Duplicate);
5. Deposit Account Authorization (In Duplicate);

The Commissioner is authorized to charge any deficiencies in fees and credit any overpayment of fees to Deposit Account No. **50-2019**. A duplicate of this transmittal is enclosed.

Respectfully submitted,
JACKSON & CO., LLP®

Dated: September 11, 2013

By: /Seong-Kun Oh/
Seong-Kun Oh
Reg. No. 48,210
Attorneys for Applicant(s)

JACKSON & CO., LLP®
6114 La Salle Ave., #507
Oakland, CA 94611-2802
Customer No.: 30349

CERTIFICATE OF TRANSMISSION/MAILING

I hereby certify that this correspondence is being facsimile transmitted to the United States Patent Office, number 1-571-273-8300, or deposited with the United States Postal Service with sufficient postage as first class mail in an envelope, or filed electronically and addressed to: Commissioner for Patents, P.O. Box 1450, Alexandria, VA 22313-1450, on **September 11, 2013**.

/Seong-Kun Oh/
Seong-Kun Oh

IN THE UNITED STATES PATENT AND TRADEMARK OFFICE

Application No.	:	13/925,694	Confirmation No.	8030
Inventor	:	Wesley Scott Harper		
Filed	:	June 24, 2013		
TC/A.U.	:	1631		
Examiner	:	Not Yet Assigned		
Docket No.	:	TS-02-180C01		
Customer No.	:	30349		

Title: Method and System for Providing Real Time Analyte Sensor Calibration with Retrospective Backfill

Commissioner for Patents
P.O. Box 1450
Alexandria, VA 22313-1450

TRANSMITTAL

Sir:

Enclosed please find the following:

1. Transmittal (In Duplicate);
2. Submission of Declaration (2 Pages);
3. Declaration (2 Pages);
4. Certificate of Transmission (In Duplicate);
5. Deposit Account Authorization (In Duplicate);

The Commissioner is authorized to charge any deficiencies in fees and credit any overpayment of fees to Deposit Account No. **50-2019**. A duplicate of this transmittal is enclosed.

Respectfully submitted,
JACKSON & CO., LLP®

Dated: September 11, 2013

By: /Seong-Kun Oh/
Seong-Kun Oh
Reg. No. 48,210
Attorneys for Applicant(s)

JACKSON & CO., LLP®
6114 La Salle Ave., #507
Oakland, CA 94611-2802
Customer No.: 30349

PATENT APPLICATION FEE DETERMINATION RECORD Substitute for Form PTO-875	Application or Docket Number 13/925,694

APPLICATION AS FILED - PART I

FOR	(Column 1) NUMBER FILED	(Column 2) NUMBER EXTRA	SMALL ENTITY RATE($)	SMALL ENTITY FEE($)	OR	OTHER THAN SMALL ENTITY RATE($)	OTHER THAN SMALL ENTITY FEE($)
BASIC FEE (37 CFR 1.16(a), (b), or (c))	N/A	N/A	N/A			N/A	280
SEARCH FEE (37 CFR 1.16(k), (i), or (m))	N/A	N/A	N/A			N/A	600
EXAMINATION FEE (37 CFR 1.16(o), (p), or (q))	N/A	N/A	N/A			N/A	720
TOTAL CLAIMS (37 CFR 1.16(i))	20 minus 20 =	*			OR	x 80 =	0.00
INDEPENDENT CLAIMS (37 CFR 1.16(h))	3 minus 3 =	*				x 420 =	0.00
APPLICATION SIZE FEE (37 CFR 1.16(s))	If the specification and drawings exceed 100 sheets of paper, the application size fee due is $310 ($155 for small entity) for each additional 50 sheets or fraction thereof. See 35 U.S.C. 41(a)(1)(G) and 37 CFR 1.16(s).						0.00
MULTIPLE DEPENDENT CLAIM PRESENT (37 CFR 1.16(j))							0.00
* If the difference in column 1 is less than zero, enter "0" in column 2.			TOTAL			TOTAL	1600

APPLICATION AS AMENDED - PART II

		(Column 1) CLAIMS REMAINING AFTER AMENDMENT		(Column 2) HIGHEST NUMBER PREVIOUSLY PAID FOR	(Column 3) PRESENT EXTRA	SMALL ENTITY RATE($)	SMALL ENTITY ADDITIONAL FEE($)	OR	OTHER THAN SMALL ENTITY RATE($)	OTHER THAN SMALL ENTITY ADDITIONAL FEE($)
AMENDMENT A	Total (37 CFR 1.16(i))	*	Minus	**	=	x =		OR	x =	
AMENDMENT A	Independent (37 CFR 1.16(h))	*	Minus	***	=	x =		OR	x =	
AMENDMENT A	Application Size Fee (37 CFR 1.16(s))									
AMENDMENT A	FIRST PRESENTATION OF MULTIPLE DEPENDENT CLAIM (37 CFR 1.16(j))							OR		
						TOTAL ADD'L FEE		OR	TOTAL ADD'L FEE	

		(Column 1) CLAIMS REMAINING AFTER AMENDMENT		(Column 2) HIGHEST NUMBER PREVIOUSLY PAID FOR	(Column 3) PRESENT EXTRA	RATE($)	ADDITIONAL FEE($)	OR	RATE($)	ADDITIONAL FEE($)
AMENDMENT B	Total (37 CFR 1.16(i))	*	Minus	**	=	x =		OR	x =	
AMENDMENT B	Independent (37 CFR 1.16(h))	*	Minus	***	=	x =		OR	x =	
AMENDMENT B	Application Size Fee (37 CFR 1.16(s))									
AMENDMENT B	FIRST PRESENTATION OF MULTIPLE DEPENDENT CLAIM (37 CFR 1.16(j))							OR		
						TOTAL ADD'L FEE		OR	TOTAL ADD'L FEE	

* If the entry in column 1 is less than the entry in column 2, write "0" in column 3.
** If the "Highest Number Previously Paid For" IN THIS SPACE is less than 20, enter "20".
*** If the "Highest Number Previously Paid For" IN THIS SPACE is less than 3, enter "3".
The "Highest Number Previously Paid For" (Total or Independent) is the highest found in the appropriate box in column 1.

UNITED STATES PATENT AND TRADEMARK OFFICE

UNITED STATES DEPARTMENT OF COMMERCE
United States Patent and Trademark Office
Address: COMMISSIONER FOR PATENTS
P.O. Box 1450
Alexandria, Virginia 22313-1450
www.uspto.gov

APPLICATION NUMBER	FILING or 371(c) DATE	GRP ART UNIT	FIL FEE REC'D	ATTY.DOCKET.NO	TOT CLAIMS	IND CLAIMS
13/925,694	06/24/2013	3735	1740	TS-02-180C01	20	3

CONFIRMATION NO. 8030

FILING RECEIPT

30349
JACKSON & CO., LLP
6114 LA SALLE AVENUE
#507
OAKLAND, CA 94611-2802

OC000000062604277

Date Mailed: 07/19/2013

Receipt is acknowledged of this non-provisional patent application. The application will be taken up for examination in due course. Applicant will be notified as to the results of the examination. Any correspondence concerning the application must include the following identification information: the U.S. APPLICATION NUMBER, FILING DATE, NAME OF APPLICANT, and TITLE OF INVENTION. Fees transmitted by check or draft are subject to collection. Please verify the accuracy of the data presented on this receipt. **If an error is noted on this Filing Receipt, please submit a written request for a Filing Receipt Correction. Please provide a copy of this Filing Receipt with the changes noted thereon. If you received a "Notice to File Missing Parts" for this application, please submit any corrections to this Filing Receipt with your reply to the Notice. When the USPTO processes the reply to the Notice, the USPTO will generate another Filing Receipt incorporating the requested corrections**

Inventor(s)

Wesley Scott Harper, Alameda, CA;

Applicant(s)

Abbott Diabetes Care Inc., Alameda, CA

Power of Attorney: The patent practitioners associated with Customer Number 30349

Domestic Priority data as claimed by applicant

This application is a CON of 12/769,635 04/28/2010 PAT 8483967
which claims benefit of 61/173,600 04/29/2009

Foreign Applications for which priority is claimed (You may be eligible to benefit from the **Patent Prosecution Highway** program at the USPTO. Please see http://www.uspto.gov for more information.) - None.
Foreign application information must be provided in an Application Data Sheet in order to constitute a claim to foreign priority. See 37 CFR 1.55 and 1.76.

Permission to Access - A proper **Authorization to Permit Access to Application by Participating Offices** (PTO/SB/39 or its equivalent) has been received by the USPTO.

If Required, Foreign Filing License Granted: 07/16/2013

The country code and number of your priority application, to be used for filing abroad under the Paris Convention, is **US 13/925,694**

Projected Publication Date: 10/24/2013

Non-Publication Request: No

Early Publication Request: No

Title

Method and System for Providing Real Time Analyte Sensor Calibration with Retrospective Backfill

Preliminary Class

600

Statement under 37 CFR 1.55 or 1.78 for AIA (First Inventor to File) Transition Applications: No

PROTECTING YOUR INVENTION OUTSIDE THE UNITED STATES

Since the rights granted by a U.S. patent extend only throughout the territory of the United States and have no effect in a foreign country, an inventor who wishes patent protection in another country must apply for a patent in a specific country or in regional patent offices. Applicants may wish to consider the filing of an international application under the Patent Cooperation Treaty (PCT). An international (PCT) application generally has the same effect as a regular national patent application in each PCT-member country. The PCT process **simplifies** the filing of patent applications on the same invention in member countries, but **does not result** in a grant of "an international patent" and does not eliminate the need of applicants to file additional documents and fees in countries where patent protection is desired.

Almost every country has its own patent law, and a person desiring a patent in a particular country must make an application for patent in that country in accordance with its particular laws. Since the laws of many countries differ in various respects from the patent law of the United States, applicants are advised to seek guidance from specific foreign countries to ensure that patent rights are not lost prematurely.

Applicants also are advised that in the case of inventions made in the United States, the Director of the USPTO must issue a license before applicants can apply for a patent in a foreign country. The filing of a U.S. patent application serves as a request for a foreign filing license. The application's filing receipt contains further information and guidance as to the status of applicant's license for foreign filing.

Applicants may wish to consult the USPTO booklet, "General Information Concerning Patents" (specifically, the section entitled "Treaties and Foreign Patents") for more information on timeframes and deadlines for filing foreign patent applications. The guide is available either by contacting the USPTO Contact Center at 800-786-9199, or it can be viewed on the USPTO website at http://www.uspto.gov/web/offices/pac/doc/general/index.html.

For information on preventing theft of your intellectual property (patents, trademarks and copyrights), you may wish to consult the U.S. Government website, http://www.stopfakes.gov. Part of a Department of Commerce initiative, this website includes self-help "toolkits" giving innovators guidance on how to protect intellectual property in specific countries such as China, Korea and Mexico. For questions regarding patent enforcement issues, applicants may call the U.S. Government hotline at 1-866-999-HALT (1-866-999-4258).

LICENSE FOR FOREIGN FILING UNDER

Title 35, United States Code, Section 184

Title 37, Code of Federal Regulations, 5.11 & 5.15

GRANTED

The applicant has been granted a license under 35 U.S.C. 184, if the phrase "IF REQUIRED, FOREIGN FILING LICENSE GRANTED" followed by a date appears on this form. Such licenses are issued in all applications where the conditions for issuance of a license have been met, regardless of whether or not a license may be required as set forth in 37 CFR 5.15. The scope and limitations of this license are set forth in 37 CFR 5.15(a) unless an earlier license has been issued under 37 CFR 5.15(b). The license is subject to revocation upon written notification. The date indicated is the effective date of the license, unless an earlier license of similar scope has been granted under 37 CFR 5.13 or 5.14.

This license is to be retained by the licensee and may be used at any time on or after the effective date thereof unless it is revoked. This license is automatically transferred to any related applications(s) filed under 37 CFR 1.53(d). This license is not retroactive.

The grant of a license does not in any way lessen the responsibility of a licensee for the security of the subject matter as imposed by any Government contract or the provisions of existing laws relating to espionage and the national security or the export of technical data. Licensees should apprise themselves of current regulations especially with respect to certain countries, of other agencies, particularly the Office of Defense Trade Controls, Department of State (with respect to Arms, Munitions and Implements of War (22 CFR 121-128)); the Bureau of Industry and Security, Department of Commerce (15 CFR parts 730-774); the Office of Foreign AssetsControl, Department of Treasury (31 CFR Parts 500+) and the Department of Energy.

NOT GRANTED

No license under 35 U.S.C. 184 has been granted at this time, if the phrase "IF REQUIRED, FOREIGN FILING LICENSE GRANTED" DOES NOT appear on this form. Applicant may still petition for a license under 37 CFR 5.12, if a license is desired before the expiration of 6 months from the filing date of the application. If 6 months has lapsed from the filing date of this application and the licensee has not received any indication of a secrecy order under 35 U.S.C. 181, the licensee may foreign file the application pursuant to 37 CFR 5.15(b).

SelectUSA

The United States represents the largest, most dynamic marketplace in the world and is an unparalleled location for business investment, innovation, and commercialization of new technologies. The U.S. offers tremendous resources and advantages for those who invest and manufacture goods here. Through SelectUSA, our nation works to promote and facilitate business investment. SelectUSA provides information assistance to the international investor community; serves as an ombudsman for existing and potential investors; advocates on behalf of U.S. cities, states, and regions competing for global investment; and counsels U.S. economic development organizations on investment attraction best practices. To learn more about why the United States is the best country in the world to develop technology, manufacture products, deliver services, and grow your business, visit http://www.SelectUSA.gov or call +1-202-482-6800.

UNITED STATES PATENT AND TRADEMARK OFFICE

UNITED STATES DEPARTMENT OF COMMERCE
United States Patent and Trademark Office
Address: COMMISSIONER FOR PATENTS
P.O. Box 1450
Alexandria, Virginia 22313-1450
www.uspto.gov

APPLICATION NUMBER	FILING OR 371(C) DATE	FIRST NAMED APPLICANT	ATTY. DOCKET NO./TITLE
13/925,694	06/24/2013	Wesley Scott Harper	TS-02-180C01

CONFIRMATION NO. 8030

30349
JACKSON & CO., LLP
6114 LA SALLE AVENUE
#507
OAKLAND, CA 94611-2802

NOTICE

OC000000062604278

Date Mailed: 07/19/2013

INFORMATIONAL NOTICE TO APPLICANT

Applicant is notified that the above-identified application contains the deficiencies noted below. No period for reply is set forth in this notice for correction of these deficiencies. However, if a deficiency relates to the inventor's oath or declaration, the applicant must file an oath or declaration in compliance with 37 CFR 1.63, or a substitute statement in compliance with 37 CFR 1.64, executed by or with respect to each actual inventor no later than the expiration of the time period set in the "Notice of Allowability" to avoid abandonment. See 37 CFR 1.53(f).

The item(s) indicated below are also required and should be submitted with any reply to this notice to avoid further processing delays.

- A properly executed inventor's oath or declaration has not been received for the following inventor(s):
  Wesley Scott Harper
  Applicant may submit the inventor's oath or declaration at any time before the Notice of Allowance and Fee(s) Due, PTOL-85, is mailed.

UNITED STATES PATENT AND TRADEMARK OFFICE

UNITED STATES DEPARTMENT OF COMMERCE
United States Patent and Trademark Office
Address: COMMISSIONER FOR PATENTS
P.O. Box 1450
Alexandria, Virginia 22313-1450
www.uspto.gov

APPLICATION NUMBER	FILING OR 371(C) DATE	FIRST NAMED APPLICANT	ATTY. DOCKET NO./TITLE
13/925,694	06/24/2013	Wesley Scott Harper	TS-02-180C01

CONFIRMATION NO. 8030

POA ACCEPTANCE LETTER

30349
JACKSON & CO., LLP
6114 LA SALLE AVENUE
#507
OAKLAND, CA 94611-2802

OC000000062604416

Date Mailed: 07/19/2013

NOTICE OF ACCEPTANCE OF POWER OF ATTORNEY

This is in response to the Power of Attorney filed 06/24/2013.

The Power of Attorney in this application is accepted. Correspondence in this application will be mailed to the above address as provided by 37 CFR 1.33.

/gmihtsun/

Office of Data Management, Application Assistance Unit (571) 272-4000, or (571) 272-4200, or 1-888-786-0101

PTO/AIA/82A (07-12)
Approved for use through 11/30/2014. OMB 0651-0035
U.S. Patent and Trademark Office; U.S. DEPARTMENT OF COMMERCE
Under the Paperwork Reduction Act of 1995, no persons are required to respond to a collection of information unless it displays a valid OMB control number.

TRANSMITTAL FOR POWER OF ATTORNEY TO ONE OR MORE REGISTERED PRACTITIONERS

NOTE: This form is to be submitted with the Power of Attorney by Applicant form (PTO/AIA/82B or equivalent) to identify the application to which the Power of Attorney is directed, in accordance with 37 CFR 1.5. If the Power of Attorney by Applicant form is not accompanied by this transmittal form or an equivalent, the Power of Attorney will not be recognized in the application.

Application Number	Not Yet Assigned
Filing Date	June 24, 2013
First Named Inventor	Wesley Scott Harper
Title	Method and System for Providing Real Time Analyte Sensor Calibration with Retrospective Backfill
Art Unit	Not Yet Assigned
Examiner Name	Not Yet Assigned
Attorney Docket Number	TS-02-180C01

SIGNATURE of Applicant or Patent Practitioner

Signature	/Seong-Kun Oh/	Date	June 24, 2013
Name	Seong-Kun Oh	Telephone	510.652.6418
Registration Number	48,210		

NOTE: This form must be signed in accordance with 37 CFR 1.33. See 37 CFR 1.4(d) for signature requirements and certifications.

☐ *Total of _____ forms are submitted.

This collection of information is required by 37 CFR 1.31, 1.32 and 1.33. The information is required to obtain or retain a benefit by the public which is to file (and by the USPTO to process) an application. Confidentiality is governed by 35 U.S.C. 122 and 37 CFR 1.11 and 1.14. This collection is estimated to take 3 minutes to complete, including gathering, preparing, and submitting the completed application form to the USPTO. Time will vary depending upon the individual case. Any comments on the amount of time you require to complete this form and/or suggestions for reducing this burden, should be sent to the Chief Information Officer, U.S. Patent and Trademark Office, U.S. Department of Commerce, P.O. Box 1450, Alexandria, VA 22313-1450. DO NOT SEND FEES OR COMPLETED FORMS TO THIS ADDRESS. **SEND TO: Commissioner for Patents, P.O. Box 1450, Alexandria, VA 22313-1450.**

If you need assistance in completing the form, call 1-800-PTO-9199 and select option 2.

Doc Code: PA...

Document Description: Power of Attorney

PTO/AIA/82B(07-12)
Approved for use through 11/30/2014. OMB 0651-0035
U.S. Patent and Trademark Office; U.S. DEPARTMENT OF COMMERCE

Under the Paperwork Reduction Act of 1995, no persons are required to respond to a collection of information unless it displays a valid OMB control number.

POWER OF ATTORNEY BY APPLICANT

I hereby revoke all previous powers of attorney given in the application identified in the attached transmittal letter.

[x] I hereby appoint Practitioner(s) associated with the following Customer Number as my/our attorney(s) or agent(s), and to transact all business in the United States Patent and Trademark Office connected therewith for the application referenced in the attached transmittal letter (form PTO/AIA/82A or equivalent):

30349

OR

[ ] I hereby appoint Practitioner(s) named below as my/our attorney(s) or agent(s), and to transact all business in the United States Patent and Trademark Office connected therewith for the application referenced in the attached transmittal letter (form PTO/AIA/82A or equivalent):

Name	Registration Number		Name	Registration Number

Please recognize or change the correspondence address for the application identified in the attached transmittal letter to:

[x] The address associated with the above-mentioned Customer Number

OR

[ ] The address associated with Customer Number:

OR

[ ] Firm or Individual Name:					
Address					
City		State		Zip	
Country					
Telephone		Email			

I am the Applicant:

[ ] Inventor or Joint Inventor

[ ] Legal Representative of a Deceased or Legally Incapacitated Inventor

[x] Assignee or Person to Whom the Inventor is Under an Obligation to Assign

[ ] Person Who Otherwise Shows Sufficient Proprietary Interest (*e.g.*, a petition under 37 CFR 1.46(b)(2) was granted in the application or is concurrently being filed with this document)

SIGNATURE of Applicant for Patent

Signature		Date	13-MAR-2013
Name	Susan C. Tait	Telephone	818.749.8466
Title and Company	Senior Counsel, Abbott Diabetes Care Inc.		

NOTE: Signature - This form must be signed by the applicant in accordance with 37 CFR 1.33. See 37 CFR 1.4 for signature requirements and certifications. Submit multiple forms for more than one signature, see below *.

[ ] *Total of _____ forms are submitted.

This collection of information is required by 37 CFR 1.31, 1.32 and 1.33. The information is required to obtain or retain a benefit by the public which is to file (and by the USPTO to process) an application. Confidentiality is governed by 35 U.S.C. 122 and 37 CFR 1.11 and 1.14. This collection is estimated to take 3 minutes to complete, including gathering, preparing, and submitting the completed application form to the USPTO. Time will vary depending upon the individual case. Any comments on the amount of time you require to complete this form and/or suggestions for reducing this burden, should be sent to the Chief Information Officer, U.S. Patent and Trademark Office, U.S. Department of Commerce, P.O. Box 1450, Alexandria, VA 22313-1450. DO NOT SEND FEES OR COMPLETED FORMS TO THIS ADDRESS. **SEND TO: Commissioner for Patents, P.O. Box 1450, Alexandria, VA 22313-1450.**

If you need assistance in completing the form, call 1-800-PTO-9199 and select option 2.

Electronic Patent Application Fee Transmittal

Application Number:	
Filing Date:	
Title of Invention:	Method and System for Providing Real Time Analyte Sensor Calibration with Retrospective Backfill
First Named Inventor/Applicant Name:	Wesley Scott Harper
Filer:	Seong-Kun Oh
Attorney Docket Number:	TS-02-180C01

Filed as Large Entity

Utility under 35 USC 111(a) Filing Fees

Description	Fee Code	Quantity	Amount	Sub-Total in USD($)
Basic Filing:				
Utility application filing	1011	1	280	280
Utility Search Fee	1111	1	600	600
Utility Examination Fee	1311	1	720	720
Pages:				
Claims:				
Miscellaneous-Filing:				
Late Filing Fee for Oath or Declaration	1051	1	140	140
Petition:				

Description	Fee Code	Quantity	Amount	Sub-Total in USD($)
Patent-Appeals-and-Interference:				
Post-Allowance-and-Post-Issuance:				
Extension-of-Time:				
Miscellaneous:				
			Total in USD ($)	**1740**

Electronic Acknowledgement Receipt

EFS ID:	16133305
Application Number:	13925694
International Application Number:	
Confirmation Number:	8030
Title of Invention:	Method and System for Providing Real Time Analyte Sensor Calibration with Retrospective Backfill
First Named Inventor/Applicant Name:	Wesley Scott Harper
Customer Number:	30349
Filer:	Seong-Kun Oh
Filer Authorized By:	
Attorney Docket Number:	TS-02-180C01
Receipt Date:	24-JUN-2013
Filing Date:	
Time Stamp:	20:21:22
Application Type:	Utility under 35 USC 111(a)

Payment information:

Submitted with Payment	yes
Payment Type	Credit Card
Payment was successfully received in RAM	$1740
RAM confirmation Number	9805
Deposit Account	
Authorized User	

File Listing:

Document Number	Document Description	File Name	File Size(Bytes)/ Message Digest	Multi Part /.zip	Pages (if appl.)

1	Transmittal Letter	TS-02-180C01-Application-Transmittal.pdf	86412 62c19fb2635f3e414fb42116d56763298040939	no	2
Warnings:					
Information:					
2		TS-02-180C01-Application-as-filed.pdf	150028 47532573f1e87b418666408a008ad0f8d42caa3d	yes	26
	Multipart Description/PDF files in .zip description				
	Document Description		**Start**	**End**	
	Specification		1	21	
	Claims		22	25	
	Abstract		26	26	
Warnings:					
Information:					
3	Drawings-only black and white line drawings	TS-02-180C01-Figures-as-filed.pdf	240280 89e3bdb7d965d3e09c15a34ff2aad363da75fec4	no	7
Warnings:					
Information:					
4	Application Data Sheet	TS-02-180C01-Application-Data-Sheet.pdf	51087 af62645c4dbf6949274ac8d3d917046a32dace44	no	5
Warnings:					
Information:					
This is not an USPTO supplied ADS fillable form					
5	Power of Attorney	TS-02-180C01-Power-of-Attorney-by-Applicant.pdf	317100 433284a4a4b48e52bcb8e695266d893060d424b0	no	2
Warnings:					
Information:					
6	Fee Worksheet (SB06)	fee-info.pdf	36721 66e05ef560eed260ca2e05905ab3d5c3d406f33b	no	2
Warnings:					
Information:					
		Total Files Size (in bytes):	881628		

This Acknowledgement Receipt evidences receipt on the noted date by the USPTO of the indicated documents, characterized by the applicant, and including page counts, where applicable. It serves as evidence of receipt similar to a Post Card, as described in MPEP 503.

New Applications Under 35 U.S.C. 111
If a new application is being filed and the application includes the necessary components for a filing date (see 37 CFR 1.53(b)-(d) and MPEP 506), a Filing Receipt (37 CFR 1.54) will be issued in due course and the date shown on this Acknowledgement Receipt will establish the filing date of the application.

National Stage of an International Application under 35 U.S.C. 371
If a timely submission to enter the national stage of an international application is compliant with the conditions of 35 U.S.C. 371 and other applicable requirements a Form PCT/DO/EO/903 indicating acceptance of the application as a national stage submission under 35 U.S.C. 371 will be issued in addition to the Filing Receipt, in due course.

New International Application Filed with the USPTO as a Receiving Office
If a new international application is being filed and the international application includes the necessary components for an international filing date (see PCT Article 11 and MPEP 1810), a Notification of the International Application Number and of the International Filing Date (Form PCT/RO/105) will be issued in due course, subject to prescriptions concerning national security, and the date shown on this Acknowledgement Receipt will establish the international filing date of the application.

PTO/AIA/15 (07-12)
Approved for use through 01/31/2014. OMB 0651-0032
U.S. Patent and Trademark Office. U.S. DEPARTMENT OF COMMERCE
Under the Paperwork Reduction Act of 1995, no persons are required to respond to a collection of information unless it displays a valid OMB control number.

UTILITY PATENT APPLICATION TRANSMITTAL

(Only for new nonprovisional applications under 37 CFR 1.53(b))

Attorney Docket No.	TS-02-180C01
First Inventor	Wesley Scott Harper
Title	Method and System for Providing Real Time Analyte Sensor Calibration with Retrospective Backfill
Express Mail Label No.	

APPLICATION ELEMENTS

See MPEP chapter 600 concerning utility patent application contents.

ADDRESS TO: **Commissioner for Patents**
P.O. Box 1450
Alexandria VA 22313-1450

1. ☐ **Fee Transmittal Form.** (PTO/SB/17 or equivalent)
2. ☐ **Applicant claims small entity status.** See 37 CFR 1.27.
3. ☑ **Specification.** [*Total Pages* 26]
   Both the claims and abstract must start on a new page
   (For information on the preferred arrangement, see MPEP § 608.01(a))
4. ☑ **Drawing(s).** (*35 U.S.C. 113*) [*Total Sheets* 7]
5. **Inventor's Oath or Declaration.** [*Total Sheets* _____]
   (including substitute statements under 37 CFR 1.64 and assignments serving as an oath or declaration under 37 CFR 1.63(e))
   a. ☐ Newly executed (original or copy)
   b. ☐ A copy from a prior application (37 CFR 1.63(d))
6. ☑ **Application Data Sheet.** **See Note below.*
   See 37 CFR 1.76 (PTO/AIA/14 or equivalent)
7. ☐ **CD-ROM or CD-R.**
   in duplicate, large table or Computer Program *(Appendix)*
   ☐ Landscape Table on CD
8. **Nucleotide and/or Amino Acid Sequence Submission.**
   (if applicable, items a. – c. are required)
   a. ☐ Computer Readable Form (CRF)
   b. ☐ Specification Sequence Listing on:
      i. ☐ CD-ROM or CD-R (2 copies); or
      ii. ☐ Paper
   c. ☐ Statements verifying identity of above copies

ACCOMPANYING APPLICATION PARTS

9. ☐ **Assignment Papers.** (cover sheet & document(s))
   Name of Assignee_____
10. ☐ **37 CFR 3.73(c) Statement.** *(when there is an assignee)* ☑ **Power of Attorney.**
11. ☐ **English Translation Document.** *(if applicable)*
12. ☐ **Information Disclosure Statement.** (PTO/SB/08 or PTO-1449)
    ☐ Copies of citations attached
13. ☐ **Preliminary Amendment.**
14. ☐ **Return Receipt Postcard.** *(MPEP § 503) (Should be specifically itemized)*
15. ☐ **Certified Copy of Priority Document(s).** *(if foreign priority is claimed)*
16. ☐ **Nonpublication Request.** Under 35 U.S.C. 122(b)(2)(B)(i). Applicant must attach form PTO/SB/35 or equivalent.
17. ☐ **Other:**_____

***Note:** (1) Benefit claims under 37 CFR 1.78 and foreign priority claims under 1.55 **must** be included in an Application Data Sheet (ADS).
(2) For applications filed under 35 U.S.C. 111, the application must contain an ADS specifying the applicant if the applicant is an assignee, person to whom the inventor is under an obligation to assign, or person who otherwise shows sufficient proprietary interest in the matter. See 37 CFR 1.46(b).

18. CORRESPONDENCE ADDRESS

☑ The address associated with Customer Number: 30349 ***OR*** ☐ Correspondence address below

Name					
Address					
City		State		Zip Code	
Country		Telephone		Email	

Signature	/Seong-Kun Oh/	Date	June 24, 2013
Name (Print/Type)	Seong-Kun Oh	Registration No. (Attorney/Agent)	48,210

This collection of information is required by 37 CFR 1.53(b). The information is required to obtain or retain a benefit by the public which is to file (and by the USPTO to process) an application. Confidentiality is governed by 35 U.S.C. 122 and 37 CFR 1.11 and 1.14. This collection is estimated to take 12 minutes to complete, including gathering, preparing, and submitting the completed application form to the USPTO. Time will vary depending upon the individual case. Any comments on the amount of time you require to complete this form and/or suggestions for reducing this burden, should be sent to the Chief Information Officer, U.S. Patent and Trademark Office, U.S. Department of Commerce, P.O. Box 1450, Alexandria, VA 22313-1450. DO NOT SEND FEES OR COMPLETED FORMS TO THIS ADDRESS. **SEND TO: Commissioner for Patents, P.O. Box 1450, Alexandria, VA 22313-1450.**
If you need assistance in completing the form, call 1-800-PTO-9199 and select option 2.

PTO/AIA/15 (07-12)
Approved for use through 01/31/2014. OMB 0651-0032
U.S. Patent and Trademark Office. U.S. DEPARTMENT OF COMMERCE
Under the Paperwork Reduction Act of 1995, no persons are required to respond to a collection of information unless it displays a valid OMB control number.

UTILITY PATENT APPLICATION TRANSMITTAL

(Only for new nonprovisional applications under 37 CFR 1.53(b))

Attorney Docket No.	TS-02-180C01
First Inventor	Wesley Scott Harper
Title	Method and System for Providing Real Time Analyte Sensor Calibration with Retrospective Backfill
Express Mail Label No.	

APPLICATION ELEMENTS

See MPEP chapter 600 concerning utility patent application contents.

ADDRESS TO: **Commissioner for Patents**
P.O. Box 1450
Alexandria VA 22313-1450

1. ☐ **Fee Transmittal Form.** (PTO/SB/17 or equivalent)
2. ☐ **Applicant claims small entity status.** See 37 CFR 1.27.
3. ☑ **Specification.** [*Total Pages* 26]
   Both the claims and abstract must start on a new page
   (For information on the preferred arrangement, see MPEP § 608.01(a))
4. ☑ **Drawing(s).** (*35 U.S.C. 113*) [*Total Sheets* 7]
5. **Inventor's Oath or Declaration.** [*Total Sheets* ____]
   (including substitute statements under 37 CFR 1.64 and assignments serving as an oath or declaration under 37 CFR 1.63(e))
   a. ☐ Newly executed (original or copy)
   b. ☐ A copy from a prior application (37 CFR 1.63(d))
6. ☑ **Application Data Sheet.** **See Note below.*
   See 37 CFR 1.76 (PTO/AIA/14 or equivalent)
7. ☐ **CD-ROM or CD-R.**
   in duplicate, large table or Computer Program *(Appendix)*
   ☐ Landscape Table on CD
8. **Nucleotide and/or Amino Acid Sequence Submission.**
   (if applicable, items a. – c. are required)
   a. ☐ Computer Readable Form (CRF)
   b. ☐ Specification Sequence Listing on:
      i. ☐ CD-ROM or CD-R (2 copies); or
      ii. ☐ Paper
   c. ☐ Statements verifying identity of above copies

ACCOMPANYING APPLICATION PARTS

9. ☐ **Assignment Papers.** (cover sheet & document(s))
   Name of Assignee ____
10. ☐ **37 CFR 3.73(c) Statement.** *(when there is an assignee)* ☑ **Power of Attorney.**
11. ☐ **English Translation Document.** *(if applicable)*
12. ☐ **Information Disclosure Statement.** (PTO/SB/08 or PTO-1449)
    ☐ Copies of citations attached
13. ☐ **Preliminary Amendment.**
14. ☐ **Return Receipt Postcard.** *(MPEP § 503) (Should be specifically itemized)*
15. ☐ **Certified Copy of Priority Document(s).** *(if foreign priority is claimed)*
16. ☐ **Nonpublication Request.** Under 35 U.S.C. 122(b)(2)(B)(i). Applicant must attach form PTO/SB/35 or equivalent.
17. ☐ **Other:** ____

***Note:** (1) Benefit claims under 37 CFR 1.78 and foreign priority claims under 1.55 **must** be included in an Application Data Sheet (ADS).
(2) For applications filed under 35 U.S.C. 111, the application must contain an ADS specifying the applicant if the applicant is an assignee, person to whom the inventor is under an obligation to assign, or person who otherwise shows sufficient proprietary interest in the matter. See 37 CFR 1.46(b).

18. CORRESPONDENCE ADDRESS

☑ The address associated with Customer Number: 30349 ***OR*** ☐ Correspondence address below

Name					
Address					
City		State		Zip Code	
Country		Telephone		Email	

Signature	/Seong-Kun Oh/	Date	June 24, 2013
Name (Print/Type)	Seong-Kun Oh	Registration No. (Attorney/Agent)	48,210

This collection of information is required by 37 CFR 1.53(b). The information is required to obtain or retain a benefit by the public which is to file (and by the USPTO to process) an application. Confidentiality is governed by 35 U.S.C. 122 and 37 CFR 1.11 and 1.14. This collection is estimated to take 12 minutes to complete, including gathering, preparing, and submitting the completed application form to the USPTO. Time will vary depending upon the individual case. Any comments on the amount of time you require to complete this form and/or suggestions for reducing this burden, should be sent to the Chief Information Officer, U.S. Patent and Trademark Office, U.S. Department of Commerce, P.O. Box 1450, Alexandria, VA 22313-1450. DO NOT SEND FEES OR COMPLETED FORMS TO THIS ADDRESS. **SEND TO: Commissioner for Patents, P.O. Box 1450, Alexandria, VA 22313-1450.**
If you need assistance in completing the form, call 1-800-PTO-9199 and select option 2.

METHOD AND SYSTEM FOR PROVIDING REAL TIME ANALYTE SENSOR CALIBRATION WITH RETROSPECTIVE BACKFILL

RELATED APPLICATIONS

[0001] The present application is a continuation of U.S. patent application no. 12/769,635 filed April 28, 2010, now U.S. Patent No. 8,483,967, which claims priority under 35 U.S.C. §119(e) to U.S. provisional application no. 61/173,600 filed April 29, 2009, entitled "Method and System for Providing Real Time Analyte Sensor Calibration with Retrospective Backfill", the disclosures of each of which are incorporated in its entirety by reference for all purposes.

BACKGROUND

[0002] Analyte, e.g., glucose monitoring systems including continuous and discrete monitoring systems generally include a small, lightweight battery powered and microprocessor controlled system which is configured to detect signals proportional to the corresponding measured glucose levels using an electrometer. RF signals may be used to transmit the collected data. One aspect of certain analyte monitoring systems include a transcutaneous or subcutaneous analyte sensor configuration which is, for example, at least partially positioned through the skin layer of a subject whose analyte level is to be monitored. The sensor may use a two or three-electrode (work, reference and counter electrodes) configuration driven by a controlled potential (potentiostat) analog circuit connected through a contact system.

[0003] An analyte sensor may be configured so that a portion thereof is placed under the skin of the patient so as to contact analyte of the patient, and another portion or segment of the analyte sensor may be in communication with the transmitter unit. The transmitter unit may be configured to transmit the analyte levels detected by the sensor over a wireless communication link such as an RF (radio frequency) communication link to a receiver/monitor unit. The receiver/monitor unit may perform data analysis, among other functions, on the received analyte levels to generate information pertaining to the monitored analyte levels.

SUMMARY

[0004] Devices and methods for analyte monitoring, e.g., glucose monitoring, and/or therapy management system including, for example, medication infusion device are provided. Embodiments include transmitting information from a first location to a second, e.g., using a telemetry system such as RF telemetry. Systems herein include continuous analyte monitoring systems, discrete analyte monitoring systems, and therapy management systems.

[0005] Embodiments include receiving sensor data from an analyte sensor of a sensor monitoring system, processing the received sensor data with time corresponding calibration data, outputting the processed sensor data, detecting one or more adverse conditions associated with the sensor monitoring system, disabling the output of the sensor data during an adverse condition time period, determining that the one or more detected adverse conditions is no longer present in the sensor monitoring system, retrieving the sensor data during the adverse condition time period, processing the retrieved sensor data during the adverse condition time period, and outputting the processed retrieved sensor data.

[0006] Embodiments include detecting a condition unsuitable for calibration of an analyte sensor for a predetermined time period, disabling output of information associated with the analyte sensor, determining a successful calibration of the analyte sensor, retrieving one or more parameters associated with the successful calibration, processing sensor data during the time period of disabled output of information with the one or more parameters associated with the successful calibration, and displaying the processed sensor data for the time period of disabled information output.

[0007] Embodiments include an interface configured to receive sensor data, a first memory configured to store the received sensor data, a processor coupled to the memory and configured to process the stored sensor data, a second memory coupled to the processor and configured to store the processed sensor data, and a display unit coupled to the second memory and configured to display the processed sensor data, where the processor is further configured to detect a condition unsuitable for calibration of a sensor for a predetermined time period, disable display of processed sensor data, determine a successful calibration of the sensor, retrieve one or more parameters associated with the successful calibration, process the sensor data during the time period of disabled display of sensor data with the one or more

parameters associated with the successful calibration, and display the processed sensor data for the time period of disabled information output.

[0008] These and other objects, features and advantages of the present disclosure will become more fully apparent from the following detailed description of the embodiments, the appended claims and the accompanying drawings.

INCORPORATION BY REFERENCE

[0009] The following patents, applications and/or publications are incorporated herein by reference for all purposes: U.S. Patent Nos. 4,545,382; 4,711,245; 5,262,035; 5,262,305; 5,264,104; 5,320,715; 5,509,410; 5,543,326; 5,593,852; 5,601,435; 5,628,890; 5,820,551; 5,822,715; 5,899,855; 5,918,603; 6,071,391; 6,103,033; 6,120,676; 6,121,009; 6,134,461; 6,143,164; 6,144,837; 6,161,095; 6,175,752; 6,270,455; 6,284,478; 6,299,757; 6,338,790; 6,377,894; 6,461,496; 6,503,381; 6,514,460; 6,514,718; 6,540,891; 6,560,471; 6,579,690; 6,591,125; 6,592,745; 6,600,997; 6,605,200; 6,605,201; 6,616,819; 6,618,934; 6,650,471; 6,654,625; 6,676,816; 6,730,200; 6,736,957; 6,746,582; 6,749,740; 6,764,581; 6,773,671; 6,881,551; 6,893,545; 6,932,892; 6,932,894; 6,942,518; 7,167,818; and 7,299,082; U.S. Published Application Nos. 2004/0186365; 2005/0182306; 2007/0056858; 2007/0068807; 2007/0227911; 2007/0233013; 2008/0081977; 2008/0161666; and 2009/0054748; U.S. Patent Application Serial Nos. 11/831,866; 11/831,881; 11/831,895; 12/102,839; 12/102,844; 12/102,847; 12/102,855; 12/102,856; 12/152,636; 12/152,648; 12/152,650; 12/152,652; 12/152,657; 12/152,662; 12/152,670; 12/152,673; 12/363,712; 12/131,012; 12/242,823; 12/363,712; 12/393,921; 12/495,709; 12/698,124; 12/699,653; 12/699,844; 12/714,439; 12/761,372; and 12/761,387 and U.S. Provisional Application Serial Nos. 61/230,686 and 61/227,967.

BRIEF DESCRIPTION OF THE DRAWINGS

[0010] FIG. 1 illustrates a block diagram of a data monitoring and management system for practicing one or more embodiments of the present disclosure;

[0011] FIG. 2 is a block diagram of the transmitter unit of the data monitoring and management system shown in FIG. 1 in accordance with one embodiment of the present disclosure;

[0012] FIG. 3 is a block diagram of the receiver/monitor unit of the data monitoring and management system shown in FIG. 1 in accordance with one embodiment of the present disclosure;

[0013] FIG. 4 illustrates analyte sensor data processing in accordance with one embodiment of the present disclosure;

[0014] FIG. 5 illustrates analyte sensor data processing in accordance with one embodiment of the present disclosure;

[0015] FIG. 6 illustrates backfilling gaps in sensor data in one embodiment of the present disclosure; and

[0016] FIGS. 7A and 7B illustrate backfill of gaps of a period of uncalibrated sensor data in one embodiment.

DETAILED DESCRIPTION

[0017] Before the present disclosure is described in additional detail, it is to be understood that this disclosure is not limited to particular embodiments described, as such may, of course, vary. It is also to be understood that the terminology used herein is for the purpose of describing particular embodiments only, and is not intended to be limiting, since the scope of the present disclosure will be limited only by the appended claims.

[0018] Where a range of values is provided, it is understood that each intervening value, to the tenth of the unit of the lower limit unless the context clearly dictates otherwise, between the upper and lower limit of that range and any other stated or intervening value in that stated range, is encompassed within the disclosure. That the upper and lower limits of these smaller ranges may independently be included in the smaller ranges is also encompassed within the disclosure, subject to any specifically excluded limit in the stated range. Where the stated range includes one or both of the limits, ranges excluding either or both of those included limits are also included in the disclosure.

[0019] Unless defined otherwise, all technical and scientific terms used herein have the same meaning as commonly understood by one of ordinary skill in the art to which this disclosure belongs. Although any methods and materials similar or equivalent to those described herein can also be used in the practice or testing of the present disclosure, the preferred methods and materials are now described. All publications mentioned herein are incorporated herein by

reference to disclose and describe the methods and/or materials in connection with which the publications are cited.

[0020] It must be noted that as used herein and in the appended claims, the singular forms "a", "an", and "the" include plural referents unless the context clearly dictates otherwise.

[0021] The publications discussed herein are provided solely for their disclosure prior to the filing date of the present application. Nothing herein is to be construed as an admission that the present disclosure is not entitled to antedate such publication by virtue of prior disclosure. Further, the dates of publication provided may be different from the actual publication dates which may need to be independently confirmed.

[0022] As will be apparent to those of skill in the art upon reading this disclosure, each of the individual embodiments described and illustrated herein has discrete components and features which may be readily separated from or combined with the features of any of the other several embodiments without departing from the scope or spirit of the present disclosure.

[0023] The figures shown herein are not necessarily drawn to scale, with some components and features being exaggerated for clarity.

[0024] As described in further detail below, in accordance with the various embodiments of the present disclosure, there is provided a method and system for positioning a controller unit within a transmission range for close proximity communication, transmitting one or more predefined close proximity commands, and receiving a response packet in response to the transmitted one or more predefined close proximity commands. For example, in one aspect, close proximity communication includes short range wireless communication between communication components or devices, where the communication range is limited to about 10 inches or less, about 5 inches or less, or about 2 inches or less, or other suitable, short range or distance between the devices. The close proximity wireless communication in certain embodiments includes a bi-directional communication where a command sending communication device, when positioned within the short communication range or in close proximity to the command receiving communication device, is configured to transmit one or more commands to the command receiving communication device (for example, when a user activates or actuates a transmit command button or switch). In response, the command receiving communication device may be configured to perform one or more routines associated with the received command, and/or return or send back a response data packet or

signal to the command sending communication device. Example of such functions and or commands may include, but not limited to activation of certain functions or routines such as analyte related data processing, and the like.

[0025] FIG. 1 illustrates a data monitoring and management system such as, for example, analyte (e.g., glucose) monitoring system 100 in accordance with one embodiment of the present disclosure. The subject invention is further described primarily with respect to a glucose monitoring system for convenience and such description is in no way intended to limit the scope of the invention. It is to be understood that the analyte monitoring system may be configured to monitor a variety of analytes, e.g., lactate, and the like.

[0026] Analytes that may be monitored include, for example, acetyl choline, amylase, bilirubin, cholesterol, chorionic gonadotropin, creatine kinase (e.g., CK-MB), creatine, DNA, fructosamine, glucose, glutamine, growth hormones, hormones, ketones, lactate, peroxide, prostate-specific antigen, prothrombin, RNA, thyroid stimulating hormone, and troponin. The concentration of drugs, such as, for example, antibiotics (e.g., gentamicin, vancomycin, and the like), digitoxin, digoxin, drugs of abuse, theophylline, and warfarin, may also be monitored. More than one analyte may be monitored by a single system, e.g. a single analyte sensor.

[0027] The analyte monitoring system 100 includes a sensor unit 101, a data processing and transmitter unit 102 coupleable to the sensor unit 101, and a primary receiver unit 104 which is configured to communicate with the data processing and transmitter unit 102 via a bi-directional communication link 103. The primary receiver unit 104 may be further configured to transmit data to a data processing terminal 105 for evaluating the data received by the primary receiver unit 104. Moreover, the data processing terminal 105 in one embodiment may be configured to receive data directly from the data processing and transmitter unit 102 via a communication link which may optionally be configured for bi-directional communication. Accordingly, data processing and transmitter unit 102 and/or receiver unit 104 may include a transceiver.

[0028] Also shown in FIG. 1 is an optional secondary receiver unit 106 which is operatively coupled to the communication link and configured to receive data transmitted from the data processing and transmitter unit 102. Moreover, as shown in the Figure, the secondary receiver unit 106 is configured to communicate with the primary receiver unit 104 as well as

the data processing terminal 105. Indeed, the secondary receiver unit 106 may be configured for bi-directional wireless communication with each or one of the primary receiver unit 104 and the data processing terminal 105. As discussed in further detail below, in one embodiment of the present disclosure, the secondary receiver unit 106 may be configured to include a limited number of functions and features as compared with the primary receiver unit 104. As such, the secondary receiver unit 106 may be configured substantially in a smaller compact housing or embodied in a device such as a wrist watch, pager, mobile phone, PDA, for example. Alternatively, the secondary receiver unit 106 may be configured with the same or substantially similar functionality as the primary receiver unit 104. The receiver unit may be configured to be used in conjunction with a docking cradle unit, for example for one or more of the following or other functions: placement by bedside, for re-charging, for data management, for night time monitoring, and/or bi-directional communication device.

[0029] In one aspect sensor unit 101 may include two or more sensors, each configured to communicate with data processing and transmitter unit 102. Furthermore, while only one data processing and transmitter unit 102, communication link 103, and data processing terminal 105 are shown in the embodiment of the analyte monitoring system 100 illustrated in FIG. 1, it will be appreciated by one of ordinary skill in the art that the analyte monitoring system 100 may include one or more sensors, multiple transmitter units 102, communication links 103, and data processing terminals 105. Moreover, within the scope of the present disclosure, the analyte monitoring system 100 may be a continuous monitoring system, or semi-continuous, or a discrete monitoring system. In a multi-component environment, each device is configured to be uniquely identified by each of the other devices in the system so that communication conflict is readily resolved between the various components within the analyte monitoring system 100.

[0030] In one embodiment of the present disclosure, the sensor unit 101 is physically positioned in or on the body of a user whose analyte level is being monitored. The sensor unit 101 may be configured to continuously sample the analyte level of the user and convert the sampled analyte level into a corresponding data signal for transmission by the data processing and transmitter unit 102. In certain embodiments, the data processing and transmitter unit 102 may be physically coupled to the sensor unit 101 so that both devices are integrated in a single housing and positioned on the user's body. The data processing and transmitter unit 102 may

perform data processing such as filtering and encoding on data signals and/or other functions, each of which corresponds to a sampled analyte level of the user, and in any event data processing and transmitter unit 102 transmits analyte information to the primary receiver unit 104 via the communication link 103. Examples of such integrated sensor and transmitter units can be found in, among others, US Patent Application No. 12/698,124, incorporated herein by reference.

[0031] In one embodiment, the analyte monitoring system 100 is configured as a one-way RF communication path from the data processing and transmitter unit 102 to the primary receiver unit 104. In such embodiment, the data processing and transmitter unit 102 transmits the sampled data signals received from the sensor unit 101 without acknowledgement from the primary receiver unit 104 that the transmitted sampled data signals have been received. For example, the data processing and transmitter unit 102 may be configured to transmit the encoded sampled data signals at a fixed rate (e.g., at one minute intervals) after the completion of the initial power on procedure. Likewise, the primary receiver unit 104 may be configured to detect such transmitted encoded sampled data signals at predetermined time intervals. Alternatively, the analyte monitoring system 100 may be configured with a bi-directional RF (or otherwise) communication between the data processing and transmitter unit 102 and the primary receiver unit 104.

[0032] Additionally, in one aspect, the primary receiver unit 104 may include two sections. The first section is an analog interface section that is configured to communicate with the data processing and transmitter unit 102 via the communication link 103. In one embodiment, the analog interface section may include an RF receiver and an antenna for receiving and amplifying the data signals from the data processing and transmitter unit 102, which are thereafter, demodulated with a local oscillator and filtered through a band-pass filter. The second section of the primary receiver unit 104 is a data processing section which is configured to process the data signals received from the data processing and transmitter unit 102 such as by performing data decoding, error detection and correction, data clock generation, and data bit recovery.

[0033] In operation, upon completing the power-on procedure, the primary receiver unit 104 is configured to detect the presence of the data processing and transmitter unit 102 within its range based on, for example, the strength of the detected data signals received from the data

processing and transmitter unit 102 and/or a predetermined transmitter identification information. Upon successful synchronization with the corresponding data processing and transmitter unit 102, the primary receiver unit 104 is configured to begin receiving from the data processing and transmitter unit 102 data signals corresponding to the user's detected analyte level. More specifically, the primary receiver unit 104 in one embodiment is configured to perform synchronized time hopping with the corresponding synchronized data processing and transmitter unit 102 via the communication link 103 to obtain the user's detected analyte level.

[0034] Referring again to FIG. 1, the data processing terminal 105 may include a personal computer, a portable computer such as a laptop or a handheld device (e.g., personal digital assistants (PDAs)), and the like, each of which may be configured for data communication with the receiver via a wired or a wireless connection. Additionally, the data processing terminal 105 may further be connected to a data network (not shown) for storing, retrieving and updating data corresponding to the detected analyte level of the user.

[0035] Within the scope of the present disclosure, the data processing terminal 105 may include an infusion device such as an insulin infusion pump (external or implantable) or the like, which may be configured to administer insulin to patients, and which may be configured to communicate with the receiver unit 104 for receiving, among others, the measured analyte level. Alternatively, the receiver unit 104 may be configured to integrate or otherwise couple to an infusion device therein so that the receiver unit 104 is configured to administer insulin therapy to patients, for example, for administering and modifying basal profiles, as well as for determining appropriate boluses for administration based on, among others, the detected analyte levels received from the data processing and transmitter unit 102.

[0036] Additionally, the data processing and transmitter unit 102, the primary receiver unit 104 and the data processing terminal 105 may each be configured for bi-directional wireless communication such that each of the data processing and transmitter unit 102, the primary receiver unit 104 and the data processing terminal 105 may be configured to communicate (that is, transmit data to and receive data from) with each other via the wireless communication link 103. More specifically, the data processing terminal 105 may in one embodiment be configured to receive data directly from the data processing and transmitter

unit 102 via a communication link, where the communication link, as described above, may be configured for bi-directional communication.

[0037] In this embodiment, the data processing terminal 105 which may include an insulin pump, may be configured to receive the analyte signals from the data processing and transmitter unit 102, and thus, incorporate the functions of the receiver 104 including data processing for managing the patient's insulin therapy and analyte monitoring. In one embodiment, the communication link 103 may include one or more of an RF communication protocol, an infrared communication protocol, a Bluetooth® enabled communication protocol, an 802.11x wireless communication protocol, or an equivalent wireless communication protocol which would allow secure, wireless communication of several units (for example, per HIPAA requirements) while avoiding potential data collision and interference.

[0038] FIG. 2 is a block diagram of the transmitter of the data monitoring and detection system shown in FIG. 1 in accordance with one embodiment of the present disclosure. Referring to the Figure, the data processing and transmitter unit 102 in one embodiment includes an analog interface 201 configured to communicate with the sensor unit 101 (FIG. 1), a user input 202, and a temperature measurement section 203, each of which is operatively coupled to a transmitter processor 204 such as a central processing unit (CPU). As can be seen from FIG. 2, there are provided four contacts, three of which are electrodes - work electrode (W) 210, guard contact (G) 211, reference electrode (R) 212, and counter electrode (C) 213, each operatively coupled to the analog interface 201 of the data processing and transmitter unit 102 for connection to the sensor unit 101 (FIG. 1). In one embodiment, each of the work electrode (W) 210, guard contact (G) 211, reference electrode (R) 212, and counter electrode (C) 213 may be made using a conductive material that is either printed or etched or ablated, for example, such as carbon which may be printed, or a metal such as a metal foil (e.g., gold) or the like, which may be etched or ablated or otherwise processed to provide one or more electrodes. Fewer or greater electrodes and/or contact may be provided in certain embodiments.

[0039] Further shown in FIG. 2 are a transmitter serial communication section 205 and an RF transmitter 206, each of which is also operatively coupled to the transmitter processor 204. Moreover, a power supply 207 such as a battery is also provided in the data processing and

transmitter unit 102 to provide the necessary power for the data processing and transmitter unit 102. In certain embodiments, the power supply 207 also provides the power necessary to power the sensor 101. In other embodiments, the sensor is a self-powered sensor, such as the sensor described in US Patent Application No. 12/393,921, incorporated herein by reference. Additionally, as can be seen from the Figure, clock 208 is provided to, among others, supply real time information to the transmitter processor 204.

[0040] In one embodiment, a unidirectional input path is established from the sensor unit 101 (FIG. 1) and/or manufacturing and testing equipment to the analog interface 201 of the data processing and transmitter unit 102, while a unidirectional output is established from the output of the RF transmitter 206 of the data processing and transmitter unit 102 for transmission to the primary receiver unit 104. In this manner, a data path is shown in FIG. 2 between the aforementioned unidirectional input and output via a dedicated link 209 from the analog interface 201 to serial communication section 205, thereafter to the processor 204, and then to the RF transmitter 206. As such, in one embodiment, via the data path described above, the data processing and transmitter unit 102 is configured to transmit to the primary receiver unit 104 (FIG. 1), via the communication link 103 (FIG. 1), processed and encoded data signals received from the sensor unit 101 (FIG. 1). Additionally, the unidirectional communication data path between the analog interface 201 and the RF transmitter 206 discussed above allows for the configuration of the data processing and transmitter unit 102 for operation upon completion of the manufacturing process as well as for direct communication for diagnostic and testing purposes.

[0041] As discussed above, the transmitter processor 204 is configured to transmit control signals to the various sections of the data processing and transmitter unit 102 during the operation of the data processing and transmitter unit 102. In one embodiment, the transmitter processor 204 also includes a memory (not shown) for storing data such as the identification information for the data processing and transmitter unit 102, as well as the data signals received from the sensor unit 101. The stored information may be retrieved and processed for transmission to the primary receiver unit 104 under the control of the transmitter processor 204. Furthermore, the power supply 207 may include a commercially available battery, which may be a rechargeable battery.

[0042] In certain embodiments, the data processing and transmitter unit 102 is also configured such that the power supply section 207 is capable of providing power to the transmitter for a minimum of about three months of continuous operation, e.g., after having been stored for about eighteen months such as stored in a low-power (non-operating) mode. In one embodiment, this may be achieved by the transmitter processor 204 operating in low power modes in the non-operating state, for example, drawing no more than approximately 1 μA of current. Indeed, in one embodiment, a step during the manufacturing process of the data processing and transmitter unit 102 may place the data processing and transmitter unit 102 in the lower power, non-operating state (i.e., post-manufacture sleep mode). In this manner, the shelf life of the data processing and transmitter unit 102 may be significantly improved. Moreover, as shown in FIG. 2, while the power supply unit 207 is shown as coupled to the processor 204, and as such, the processor 204 is configured to provide control of the power supply unit 207, it should be noted that within the scope of the present disclosure, the power supply unit 207 is configured to provide the necessary power to each of the components of the data processing and transmitter unit 102 shown in FIG. 2.

[0043] Referring back to FIG. 2, the power supply section 207 of the data processing and transmitter unit 102 in one embodiment may include a rechargeable battery unit that may be recharged by a separate power supply recharging unit (for example, provided in the receiver unit 104) so that the data processing and transmitter unit 102 may be powered for a longer period of usage time. Moreover, in one embodiment, the data processing and transmitter unit 102 may be configured without a battery in the power supply section 207, in which case the data processing and transmitter unit 102 may be configured to receive power from an external power supply source (for example, a battery) as discussed in further detail below.

[0044] Referring yet again to FIG. 2, the temperature measurement section 203 of the data processing and transmitter unit 102 is configured to monitor the temperature of the skin near the sensor insertion site. The temperature reading is used to adjust the analyte readings obtained from the analog interface 201. In certain embodiments, the RF transmitter 206 of the transmitter unit 102 may be configured for operation in the frequency band of approximately 315 MHz to approximately 322 MHz, for example, in the United States. In certain embodiments, the RF transmitter 206 of the transmitter unit 102 may be configured for operation in the frequency band of approximately 400 MHz to approximately 470 MHz.

Further, in one embodiment, the RF transmitter 206 is configured to modulate the carrier frequency by performing Frequency Shift Keying and Manchester encoding. In one embodiment, the data transmission rate is about 19,200 symbols per second, with a minimum transmission range for communication with the primary receiver unit 104.

[0045] Referring yet again to FIG. 2, also shown is a leak detection circuit 214 coupled to the guard contact (G) 211 and the processor 204 in the transmitter unit 102 of the data monitoring and management system 100. The leak detection circuit 214 in accordance with one embodiment of the present disclosure may be configured to detect leakage current in the sensor unit 101 to determine whether the measured sensor data are corrupt or whether the measured data from the sensor 101 is accurate. Exemplary analyte systems that may be employed are described in, for example, U.S. Patent Nos. 6,134,461, 6,175,752, 6,121,611, 6,560,471, 6,746,582, and elsewhere, the disclosure of each of which are incorporated by reference for all purposes.

[0046] FIG. 3 is a block diagram of the receiver/monitor unit of the data monitoring and management system shown in FIG. 1 in accordance with one embodiment of the present disclosure. Referring to FIG. 3, the primary receiver unit 104 includes an analyte test strip, e.g., blood glucose test strip, interface 301, an RF receiver 302, an input 303, a temperature monitor section 304, and a clock 305, each of which is operatively coupled to a receiver processor 307. As can be further seen from the Figure, the primary receiver unit 104 also includes a power supply 306 operatively coupled to a power conversion and monitoring section 308. Further, the power conversion and monitoring section 308 is also coupled to the receiver processor 307. Moreover, also shown are a receiver serial communication section 309, and an output 310, each operatively coupled to the receiver processor 307.

[0047] In one embodiment, the test strip interface 301 includes a glucose level testing portion to receive a manual insertion of a glucose test strip, and thereby determine and display the glucose level of the test strip on the output 310 of the primary receiver unit 104. This manual testing of glucose may be used to calibrate the sensor unit 101 or otherwise. The RF receiver 302 is configured to communicate, via the communication link 103 (FIG. 1) with the RF transmitter 206 of the transmitter unit 102, to receive encoded data signals from the transmitter unit 102 for, among others, signal mixing, demodulation, and other data processing. The input 303 of the primary receiver unit 104 is configured to allow the user to

enter information into the primary receiver unit 104 as needed. In one aspect, the input 303 may include one or more keys of a keypad, a touch-sensitive screen, or a voice-activated input command unit. The temperature monitor section 304 is configured to provide temperature information of the primary receiver unit 104 to the receiver processor 307, while the clock 305 provides, among others, real time information to the receiver processor 307.

[0048] Each of the various components of the primary receiver unit 104 shown in FIG. 3 is powered by the power supply 306 which, in one embodiment, includes a battery. Furthermore, the power conversion and monitoring section 308 is configured to monitor the power usage by the various components in the primary receiver unit 104 for effective power management and to alert the user, for example, in the event of power usage which renders the primary receiver unit 104 in sub-optimal operating conditions. An example of such sub-optimal operating condition may include, for example, operating the vibration output mode (as discussed below) for a period of time thus substantially draining the power supply 306 while the processor 307 (thus, the primary receiver unit 104) is turned on. Moreover, the power conversion and monitoring section 308 may additionally be configured to include a reverse polarity protection circuit such as a field effect transistor (FET) configured as a battery activated switch.

[0049] The serial communication section 309 in the primary receiver unit 104 is configured to provide a bi-directional communication path from the testing and/or manufacturing equipment for, among others, initialization, testing, and configuration of the primary receiver unit 104. Serial communication section 309 can also be used to upload data to a computer, such as time-stamped blood glucose data. The communication link with an external device (not shown) can be made, for example, by cable, infrared (IR) or RF link. The output 310 of the primary receiver unit 104 is configured to provide, among others, a graphical user interface (GUI) such as a liquid crystal display (LCD) for displaying information. Additionally, the output 310 may also include an integrated speaker for outputting audible signals as well as to provide vibration output as commonly found in handheld electronic devices, such as mobile telephones presently available. In a further embodiment, the primary receiver unit 104 also includes an electro-luminescent lamp configured to provide backlighting to the output 310 for output visual display in dark ambient surroundings.

[0050] Referring back to FIG. 3, the primary receiver unit 104 in one embodiment may also include a storage section such as a programmable, non-volatile memory device as part of the processor 307, or provided separately in the primary receiver unit 104, operatively coupled to the processor 307. The processor 307 may be configured to synchronize with a transmitter, e.g., using Manchester decoding or the like, as well as error detection and correction upon the encoded data signals received from the transmitter unit 102 via the communication link 103.

[0051] Periodic calibration of the sensor unit 101 (FIG. 1) of an analyte monitoring system 100, in some embodiments, may be required for accurate calculation of a user's analyte level. Calibration, in some aspects, is used to ensure the analyte related data signals received at a transmitter unit 102 (and further transmitted to a receiver unit, such as the primary receiver unit 104) are correctly converted to corresponding analyte levels. Exemplary calibration protocols, routines and techniques are described, for example, in U.S. Patent No. 7,299,082, U.S. Patent Application No. 11/537,991 filed October 2, 2006, U.S. Patent Application No. 12/363,706 filed January 30, 2009 and in U.S. Patent Application No. 12/363,712 filed January 30, 2009, the disclosures of each of which are herein incorporated by reference for all purposes.

[0052] There are time periods where the sensor characteristics or the user's physiological condition renders the condition unsuitable for a sensor calibration event. For example, the sensor may be configured for periodic calibration, such as, after 2 hours after insertion, 10 hours after insertion, 12 hours after insertion, 24 hours after insertion, 48 hours after insertion, or 72 hours after insertion, or one or more combinations thereof. If a predetermined calibration event is triggered but a successful calibration does not result, after a certain time period (for example, a predetermined grace period during which to calibrate), the receiver unit may no longer display the monitored and processed glucose information.

[0053] Other conditions may also result in rendering the condition unsuitable for sensor calibration including, but not limited to, detection of a failure mode of a sensor, sensor data values being outside a predetermined range, rate of change of sensor data values being above a predetermined threshold, a temperature measurement outside a predetermined range, or any combination thereof.

[0054] FIG. 4 illustrates analyte sensor data processing in accordance with one embodiment of the present disclosure. Referring to FIG. 4, a transmitter unit 102 (FIG. 1) in operational

contact with a sensor 101 receives analyte related sensor data (410) corresponding to a measured level of a biological fluid of the user. For example, the sensor 101 (FIG. 1) may be an analyte sensor configured to detect and measure the concentration of an analyte in a biological fluid, such as the blood of a user. Upon receipt of the analyte related sensor data, the transmitter unit 102 further transmits the analyte related sensor data to a receiver unit, such as primary receiver unit 104 (FIG. 1). It is to be noted that the reference to analyte related sensor data herein and throughout specification includes, for example, current signal received from the analyte sensor, as well as the current signal which has undergone a predetermined data processing routine including, for example, filtering, clipping, digitizing, and/or encoding, and/or any other further processing and/or conditioning. In one aspect, the primary receiver unit 104 determines whether the sensor is calibrated and is in acceptable condition for further data processing (420). When sensor related conditions are unsuitable for calibration, the analyte related sensor data is stored (450) in a memory, for example, in the primary receiver unit 104.

[0055] Referring still to FIG. 4, if the sensor data is calibrated and in condition for further data processing, the sensor data is further processed (430) and output for display (440) to a user on a display unit 310 (FIG. 3) of the primary receiver unit 104. In one embodiment, the display of the processed sensor data comprises a graphical representation of the processed sensor data. In other embodiments, the processed sensor data may be displayed as numerical values, visual indicators, auditory outputs, or combinations thereof. In one aspect, the processing routine described in conjunction with FIG. 4 is performed or executed in, for example, the transmitter unit 102, the secondary receiver unit 106 (FIG. 1), or the data processing terminal 105 (FIG. 1) of the analyte monitoring system 100 (FIG. 1) based on analyte data received from the sensor 101.

[0056] FIG. 5 illustrates analyte sensor data processing in accordance with one embodiment of the present disclosure. Referring to FIG. 5, in one embodiment, transmitter unit 102 (FIG. 1) receives analyte related sensor data (510) from a sensor 101 (FIG. 1). Upon receipt of the analyte related sensor data, the transmitter unit 102 transmits the analyte related sensor data (or processed, digitized, and/or filtered signals) to the primary receiver unit 104 (FIG. 1). The primary receiver unit 104 is configured to determine if calibration of the sensor data is suitable – that is, whether the conditions necessary for sensor calibration are met (520).

[0057] Still referring to FIG. 5, if it is determined that the sensor 101 is not calibrated or calibration condition for calibrating the sensor 101 is not met, in one aspect, the primary receiver unit stores the analyte related sensor data in a memory (550) and temporarily disables display of the sensor data (560) to the user (for example, if a calibration event has not occurred and the calibration grace period has expired). On the other hand, if the sensor 101 is calibrated, the sensor data is processed (530) by the primary receiver unit 104 and the processed sensor data is output to the user (540), for example via a display unit 310 (FIG. 3) of the primary receiver unit 104. In one aspect, the processing routine described in conjunction with FIG. 5 is performed or executed in, for example, the transmitter unit 102, the secondary receiver unit 106, or the data processing terminal 105 of the analyte monitoring system 100 based on analyte data received from the sensor 101 (FIG. 1).

[0058] In one aspect, the display or output of processed sensor data may be disabled if a required calibration event is unsuccessful over a permitted time period (for example, including a predetermined grace period measured from the scheduled calibration). Thereafter, upon successful calibration, the system resumes display of the processed and calibrated analyte sensor data. However, there may be a time period or a gap in the output display during which the necessary calibration did not occur in a timely manner. For example, as shown in FIG. 7A, if sensor data is displayed as a graphical display, during time periods where the analyte monitoring system 100 was not properly calibrated, analyte related sensor data was not processed and/or displayed, resulting in a gap in the graphical display.

[0059] FIG. 6 illustrates backfilling gaps in sensor data in one embodiment of the present disclosure. Referring to FIG. 6, when a scheduled calibration event fails and the associated grace period for calibration does not occur, the output display of the processed, calibrated sensor data is disabled (610). Referring to FIG. 6, once the system recovers after a successful calibration event, the calibrated sensor data is once again displayed (and stored). Furthermore, in one aspect, based on the parameters associated with the successful calibration, the previously unprocessed data during the display time out period may be retrieved (for example, the previously stored analyte related sensor signals during this period) and processed using calibration data, such as a sensitivity ratio for conversion of analyte related sensor data to analyte levels. For example, in one aspect, the subset of analyte related sensor data that were previously unprocessed or uncalibrated due to unsuccessful

contemporaneous calibration may be processed using, for example, calibration data such as the sensitivity ratio determined from the most recent successful calibration event, and thereafter, the gap in output display illustrating the processed and calibrated signals may be filled.

[0060] In one aspect, once successful calibration of the sensor data occurs, the calibration parameters from this calibration event may be used to process the sensor data during the period of disabled output or display (620). Upon successful processing of the sensor data during the period of disabled output, the processed sensor data during this time period is backfilled, or the gap in the processed continuous sensor data are filled in the display (630). By way of an example, FIGS. 7A and 7B illustrate the replacement of a period of unprocessed sensor data with corresponding backfilled processed sensor data, in one embodiment.

[0061] In one embodiment, the backfilled processed sensor data is displayed immediately upon calculation. In another embodiment, the backfilled processed sensor data is not displayed immediately, but rather, after waiting a predetermined period of time. The backfilled processed sensor data may not be displayed immediately to avoid possible unnecessary or incorrect action by a user in response to the backfilled processed sensor data. In this manner, in one aspect, the user or a healthcare provider may be provided with a continuous set of analyte data from the analyte monitoring system without any gaps in the processed signals for further analysis and/or therapy management.

[0062] In this manner, in accordance with the embodiments of the present disclosure, gaps in monitored analyte levels using an analyte monitoring system due to, for example, inability to promptly calibrate the sensor, system malfunction, sensor dislodging, signal errors associated with the sensor, transmitter unit, receiver unit, and the like, or any other variables or parameters that result in the inability of the analyte monitoring system to display or output the real-time monitored analyte level, may be retrospectively filled or reprocessed so that the data gap is closed and the continuously monitored analyte level does not have any or substantially missing data. That is, in embodiments of the present disclosure, upon correction or rectification of the condition or conditions/parameters which resulted in the analyte monitoring system disabling the output results associated with the monitored real time analyte levels, the parameters associated with the correction or rectification may be used to

retrospectively correct or process data or signals so that the missing gaps in analyte related data may be processed and backfilled.

[0063] In this manner, advantageously, in aspects of the present disclosure, additional robustness may be provided to the user and/or the healthcare provider to improve therapy or health management decisions.

[0064] In one embodiment, a method may include receiving sensor data from an analyte sensor of a sensor monitoring system, processing the received sensor data with time corresponding calibration data, outputting the processed sensor data, detecting one or more adverse conditions associated with the sensor monitoring system, disabling the output of the sensor data during an adverse condition time period, determining that the one or more detected adverse conditions is no longer present in the sensor monitoring system, retrieving the sensor data during the adverse condition time period, processing the retrieved sensor data during the adverse condition time period, and outputting the processed retrieved sensor data.

[0065] In one aspect, outputting the processed sensor data may include displaying the sensor data in one or more of a graphical, numerical, pictorial, audible, vibratory, or one or more combinations thereof.

[0066] The one or more detected adverse conditions may include one or more of a sensor instability condition, a calibration failure condition, or a monitoring system failure condition.

[0067] The sensor instability condition may include one or more of an early signal attenuation condition of the sensor, sensor misposition error, sensor communication error, temperature measurement outside a predetermined range, or a combination thereof.

[0068] The calibration failure condition may include one or more of an analyte level exceeding a predetermined threshold, a rate of change of analyte level exceeding a predetermined threshold, a signal error associated with the reference data, a data unavailability condition, or a combination thereof.

[0069] Furthermore, the method may include storing the processed sensor data with the associated time information based on the analyte level detection time by the sensor.

[0070] In another embodiment, a method may include detecting a condition unsuitable for calibration of an analyte sensor for a predetermined time period, disabling output of information associated with the analyte sensor, determining a successful calibration of the analyte sensor, retrieving one or more parameters associated with the successful calibration,

processing sensor data during the time period of disabled output of information with the one or more parameters associated with the successful calibration, and displaying the processed sensor data for the time period of disabled information output.

[0071] The sensor data may be analyte concentration data.

[0072] The analyte concentration data may include blood glucose concentration data.

[0073] The sensor data may be processed in substantially real-time.

[0074] The condition unsuitable for calibration may include one or more of a failure mode of a sensor, sensor data outside a predetermined acceptable range, a rate of change of sensor data above a predetermined level, a requirement for calibration of a sensor, a temperature measurement outside a predetermined range, or any combination thereof.

[0075] The processed sensor data for the time period of disabled information output may be displayed immediately upon processing.

[0076] The processed sensor data for the time period of disabled information output may be displayed only after waiting a predetermined period of time.

[0077] In another embodiment, an apparatus may include an interface configured to receive sensor data, a first memory configured to store the received sensor data, a processor coupled to the memory and configured to process the stored sensor data, a second memory coupled to the processor and configured to store the processed sensor data, and a display unit coupled to the second memory and configured to display the processed sensor data, wherein the processor is further configured to detect a condition unsuitable for calibration of a sensor for a predetermined time period, disable display of processed sensor data, determine a successful calibration of the sensor, retrieve one or more parameters associated with the successful calibration, process the sensor data during the time period of disabled display of sensor data with the one or more parameters associated with the successful calibration, and display the processed sensor data for the time period of disabled information output.

[0078] The sensor may be an analyte sensor.

[0079] The analyte sensor may be a glucose sensor.

[0080] The sensor data may correspond to analyte concentration data.

[0081] The analyte concentration data may include blood glucose concentration data.

[0082] Furthermore, the apparatus may be configured to process and display the sensor data substantially in real-time.

[0083] In one aspect, the condition unsuitable for calibration may include one or more of a failure mode of a sensor, sensor data outside a predetermined acceptable range, a rate of change of sensor data above a predetermined level, a requirement for calibration of a sensor, a temperature measurement outside a predetermined range, or any combination thereof.

[0084] The display unit may be configured to display the processed sensor data for the time period of disabled information output substantially immediately upon processing the sensor data.

[0085] The display unit may be configured to display the processed sensor data for the time period of disabled information output only after waiting a predetermined period of time.

[0086] Various other modifications and alterations in the structure and method of operation of this invention will be apparent to those skilled in the art without departing from the scope and spirit of the invention. Although the invention has been described in connection with specific preferred embodiments, it should be understood that the invention as claimed should not be unduly limited to such specific embodiments. It is intended that the following claims define the scope of the present disclosure and that structures and methods within the scope of these claims and their equivalents be covered thereby.

WHAT IS CLAIMED IS:

1. A method, comprising:

receiving sensor data from an analyte sensor of a sensor monitoring system;

processing the received sensor data with time corresponding calibration data;

outputting the processed sensor data;

detecting one or more adverse conditions associated with the sensor monitoring system;

disabling the output of the sensor data during an adverse condition time period;

determining that the one or more detected adverse conditions is no longer present in the sensor monitoring system;

retrieving the sensor data during the adverse condition time period;

processing the retrieved sensor data during the adverse condition time period; and

outputting the processed retrieved sensor data.

2. The method of claim 1, wherein outputting the processed sensor data includes displaying the sensor data in one or more of a graphical, numerical, pictorial, audible, vibratory, or one or more combinations thereof.

3. The method of claim 1, wherein the one or more detected adverse conditions includes one or more of a sensor instability condition, a calibration failure condition, or a monitoring system failure condition.

4. The method of claim 3, wherein the sensor instability condition includes one or more of an early signal attenuation condition of the sensor, sensor mis-position error, sensor communication error, temperature measurement outside a predetermined range, or a combination thereof.

5. The method of claim 3, wherein the calibration failure condition includes one or more of an analyte level exceeding a predetermined threshold, a rate of change of analyte level exceeding a predetermined threshold, a signal error associated with the reference data, a data unavailability condition, or a combination thereof.

6. The method of claim 1 including storing the processed sensor data with the associated time information based on the analyte level detection time by the sensor.

7. A method, comprising:

detecting a condition unsuitable for calibration of an analyte sensor for a predetermined time period;

disabling output of information associated with the analyte sensor;

determining a successful calibration of the analyte sensor;

retrieving one or more parameters associated with the successful calibration;

processing sensor data during the time period of disabled output of information with the one or more parameters associated with the successful calibration; and

displaying the processed sensor data for the time period of disabled information output.

8. The method of claim 7, wherein the sensor data is analyte concentration data.

9. The method of claim 8, wherein the analyte concentration data includes blood glucose concentration data.

10. The method of claim 7, wherein the sensor data is processed in substantially real-time.

11. The method of claim 7, wherein the condition unsuitable for calibration includes one or more of a failure mode of a sensor, sensor data outside a predetermined acceptable range, a rate of change of sensor data above a predetermined level, a requirement for calibration of a sensor, a temperature measurement outside a predetermined range, or any combination thereof.

12. The method of claim 7, wherein the processed sensor data for the time period of disabled information output is displayed substantially immediately upon processing.

13. The method of claim 7, wherein the processed sensor data for the time period of disabled information output is displayed only after waiting a predetermined period of time.

14. An apparatus, comprising:

an interface configured to receive sensor data;

a first memory configured to store the received sensor data;

a processor coupled to the memory and configured to process the stored sensor data;

a second memory coupled to the processor and configured to store the processed sensor data; and

a display unit coupled to the second memory and configured to display the processed sensor data;

wherein the processor is further configured to:

detect a condition unsuitable for calibration of a sensor for a predetermined time period;

disable display of processed sensor data;

determine a successful calibration of the sensor;

retrieve one or more parameters associated with the successful calibration;

process the sensor data during the time period of disabled display of sensor data with the one or more parameters associated with the successful calibration; and

display the processed sensor data for the time period of disabled information output.

15. The apparatus of claim 14, wherein the sensor is an analyte sensor.

16. The apparatus of claim 15, wherein the analyte sensor is a glucose sensor.

17. The apparatus of claim 15, wherein the sensor data corresponds to analyte concentration data.

18. The apparatus of claim 17, wherein the analyte concentration data includes blood glucose concentration data.

19. The apparatus of claim 14 configured to process and display the sensor data substantially in real-time.

20. The apparatus of claim 14, wherein the condition unsuitable for calibration includes one or more of a failure mode of a sensor, sensor data outside a predetermined acceptable range, a rate of change of sensor data above a predetermined level, a requirement for calibration of a sensor, a temperature measurement outside a predetermined range, or any combination thereof.

ABSTRACT OF THE DISCLOSURE

Provided are methods and apparatus for receiving sensor data from an analyte sensor of a sensor monitoring system, processing the received sensor data with time corresponding calibration data, outputting the processed sensor data, detecting one or more adverse conditions associated with the sensor monitoring system, disabling the output of the sensor data during the adverse condition time period, determining that the one or more detected adverse conditions is no longer present in the sensor monitoring system, retrieving the sensor data during the adverse condition time period, processing the retrieved sensor data during the adverse condition time period, and outputting the processed retrieved sensor data.

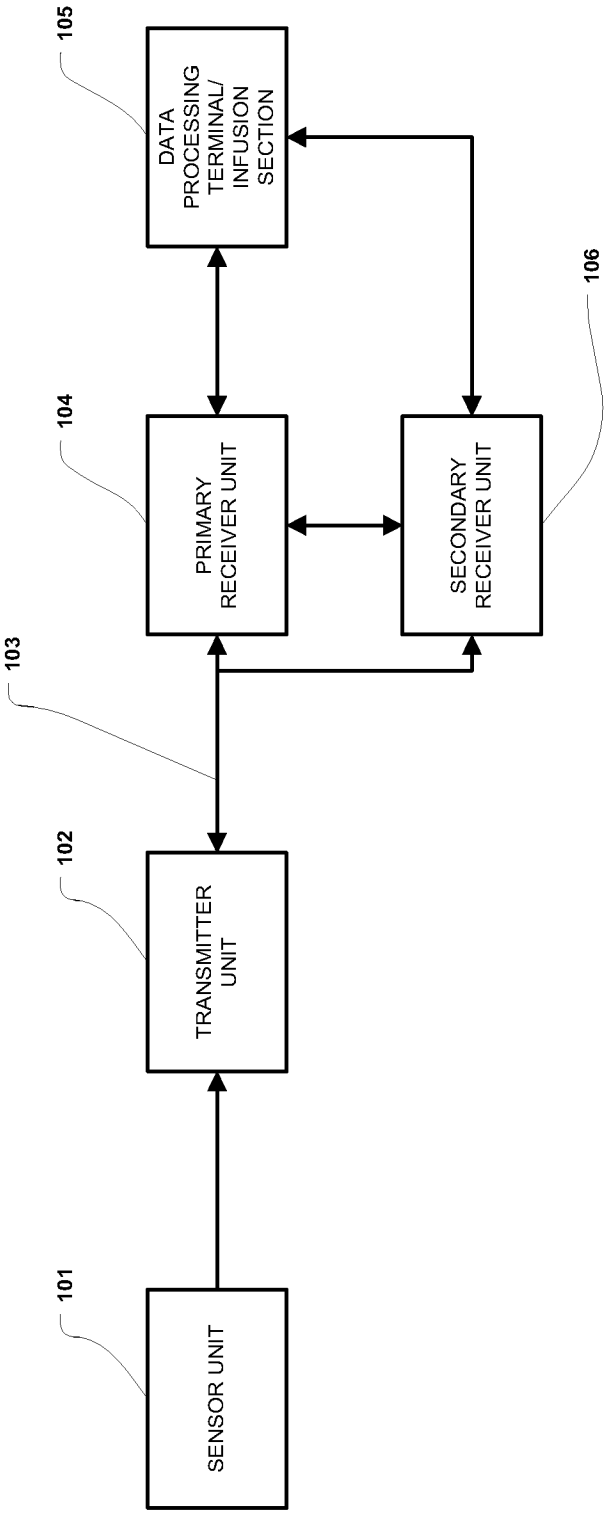
101
SENSOR UNIT
102
TRANSMITTER UNIT
103
104
PRIMARY RECEIVER UNIT
105
DATA PROCESSING TERMINAL/ INFUSION SECTION
106
SECONDARY RECEIVER UNIT

100

FIGURE 1

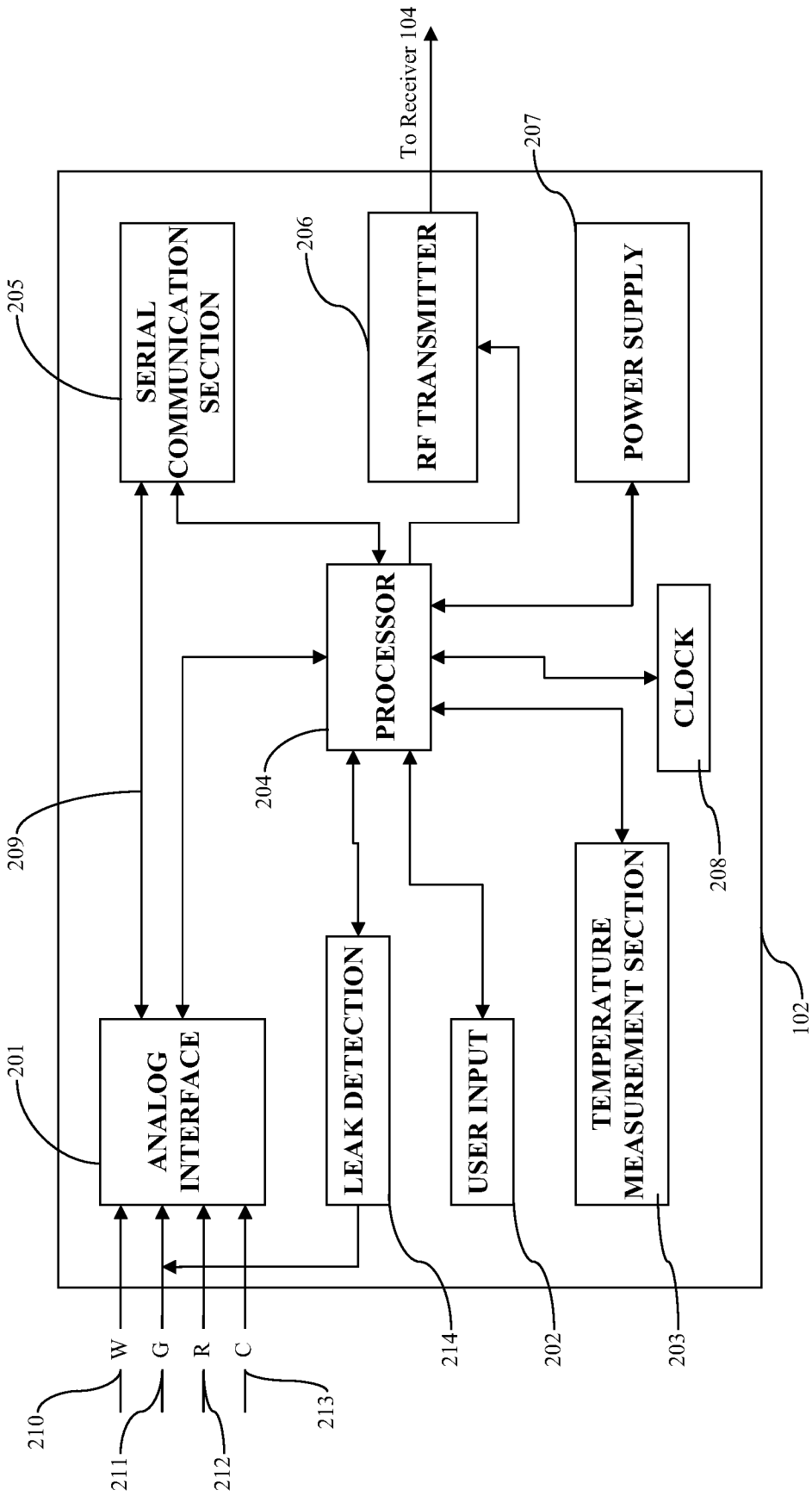
To Receiver 104
SERIAL COMMUNICATION SECTION
RF TRANSMITTER
POWER SUPPLY
PROCESSOR
CLOCK
ANALOG INTERFACE
LEAK DETECTION
USER INPUT
TEMPERATURE MEASUREMENT SECTION
W
G
R
C
205
206
207
204
208
209
201
102
214
202
203
210
211
212
213

FIGURE 2

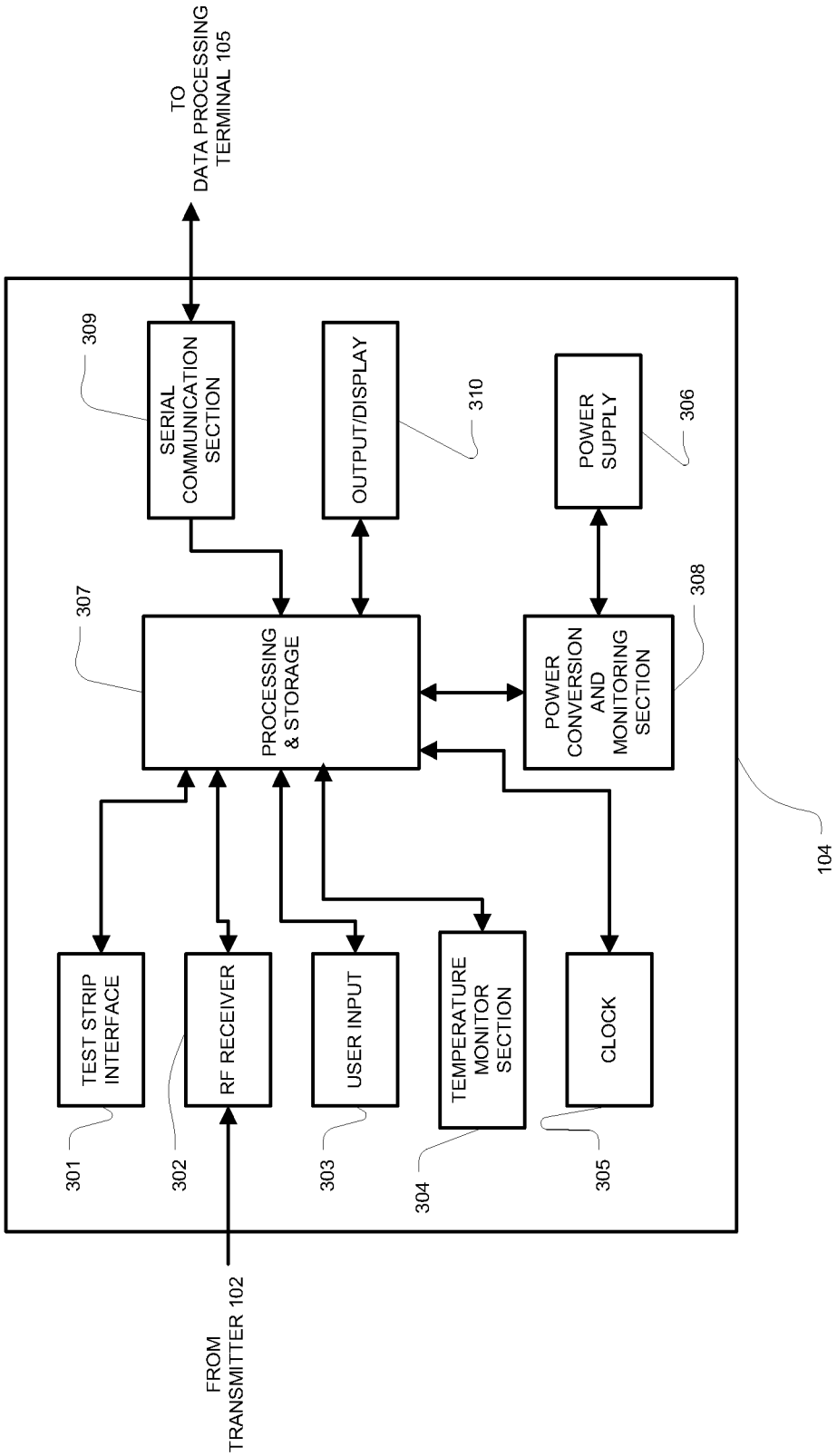
TO
DATA PROCESSING
TERMINAL 105
309
SERIAL
COMMUNICATION
SECTION
OUTPUT/DISPLAY
310
POWER
SUPPLY
306
307
PROCESSING
& STORAGE
POWER
CONVERSION
AND
MONITORING
SECTION
308
104
TEST STRIP
INTERFACE
RF RECEIVER
USER INPUT
TEMPERATURE
MONITOR
SECTION
CLOCK
301
302
303
304
305
FROM
TRANSMITTER 102

FIGURE 3

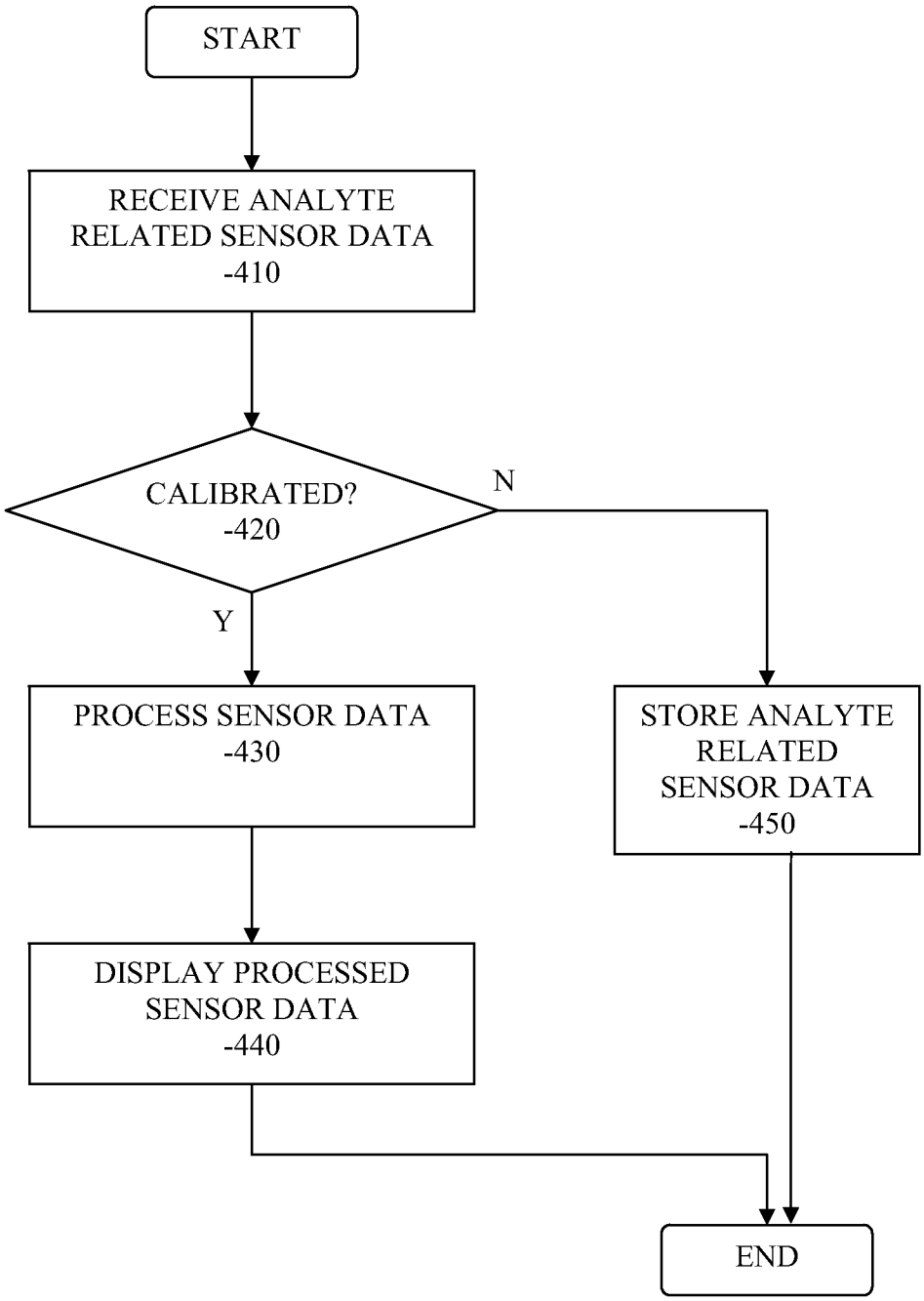
START
RECEIVE ANALYTE RELATED SENSOR DATA -410
CALIBRATED? -420
N
Y
PROCESS SENSOR DATA -430
STORE ANALYTE RELATED SENSOR DATA -450
DISPLAY PROCESSED SENSOR DATA -440
END

FIGURE 4

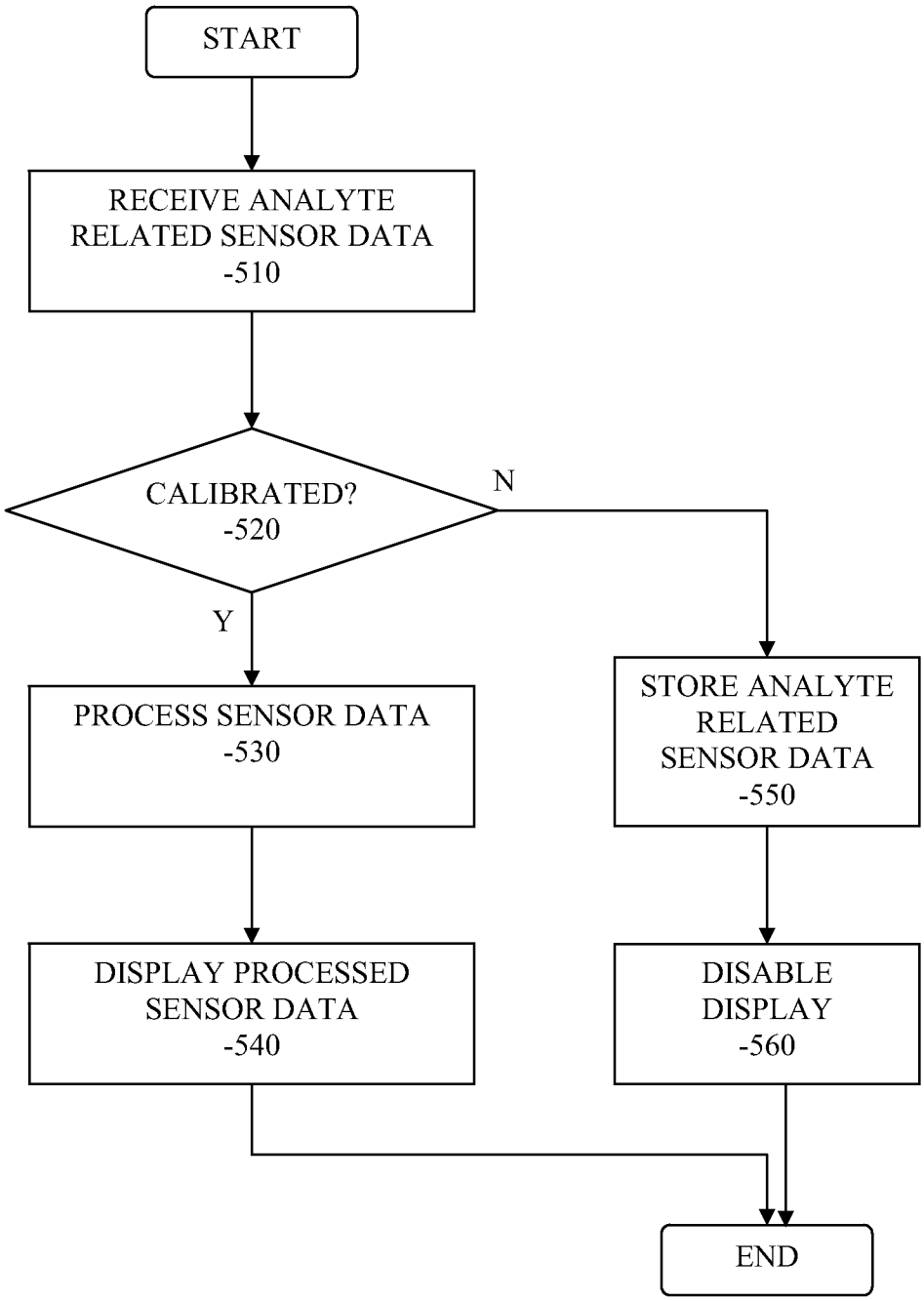
START
RECEIVE ANALYTE RELATED SENSOR DATA -510
CALIBRATED? -520
N
Y
PROCESS SENSOR DATA -530
STORE ANALYTE RELATED SENSOR DATA -550
DISPLAY PROCESSED SENSOR DATA -540
DISABLE DISPLAY -560
END

FIGURE 5

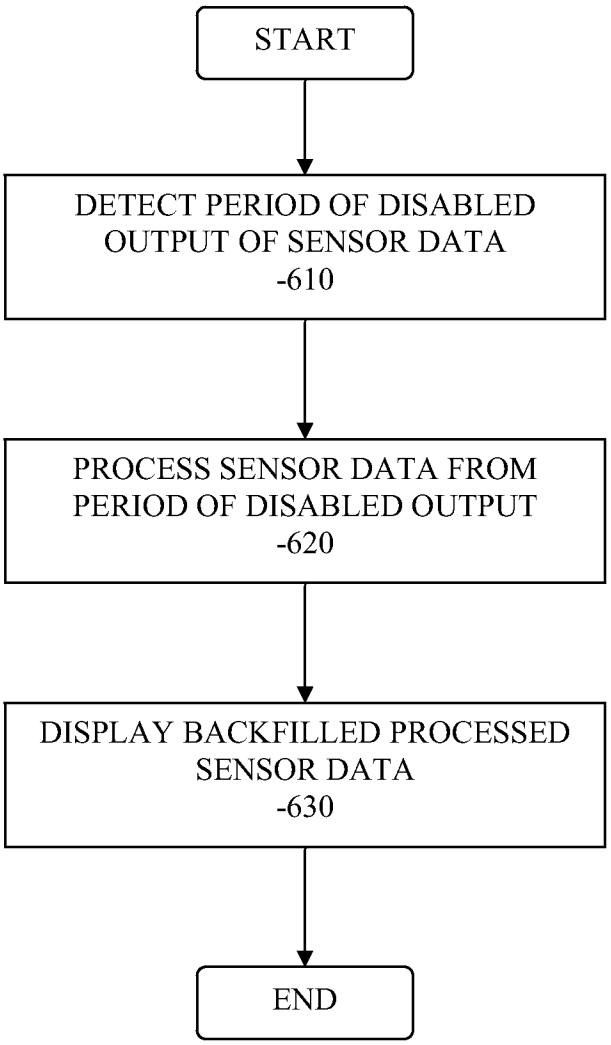
START
DETECT PERIOD OF DISABLED OUTPUT OF SENSOR DATA -610
PROCESS SENSOR DATA FROM PERIOD OF DISABLED OUTPUT -620
DISPLAY BACKFILLED PROCESSED SENSOR DATA -630
END

FIGURE 6

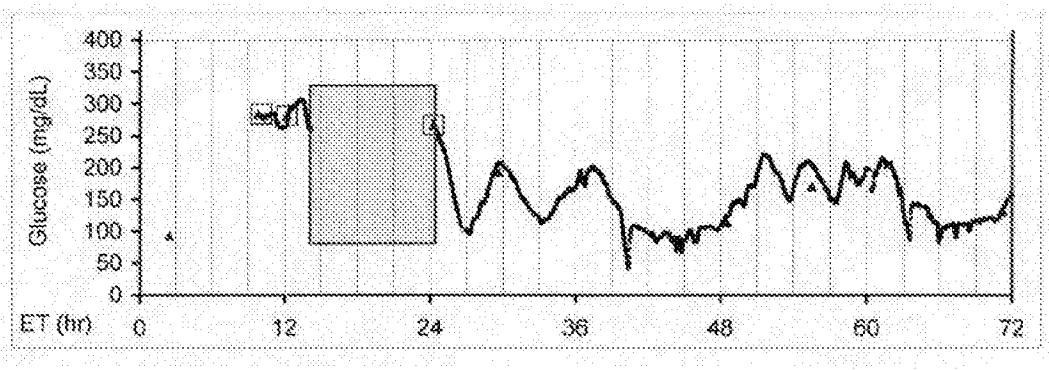

FIGURE 7A

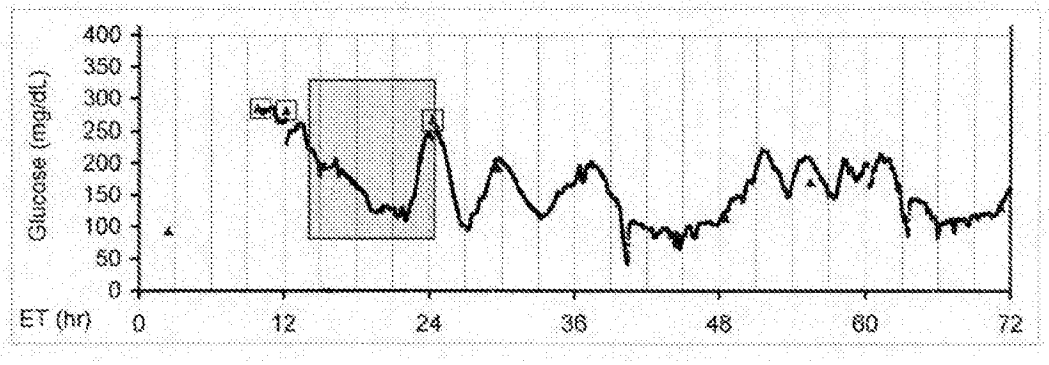

FIGURE 7B

Under the Paperwork Reduction Act of 1995, no persons are required to respond to a collection of information unless it contains a valid OMB control number.

Application Data Sheet 37 CFR 1.76	Attorney Docket Number	TS-02-180C01
	Application Number	

Title of Invention	Method and System for Providing Real Time Analyte Sensor Calibration with Retrospective Backfill

The application data sheet is part of the provisional or nonprovisional application for which it is being submitted. The following form contains the bibliographic data arranged in a format specified by the United States Patent and Trademark Office as outlined in 37 CFR 1.76.
This document may be completed electronically and submitted to the Office in electronic format using the Electronic Filing System (EFS) or the document may be printed and included in a paper filed application.

Secrecy Order 37 CFR 5.2

☐ Portions or all of the application associated with this Application Data Sheet may fall under a Secrecy Order pursuant to 37 CFR 5.2 (Paper filers only. Applications that fall under Secrecy Order may not be filed electronically.)

Inventor Information:

Inventor 1 Remove

Legal Name

Prefix	Given Name	Middle Name	Family Name	Suffix
	Wesley	Scott	Harper	

Residence Information (Select One) ◉ US Residency ○ Non US Residency ○ Active US Military Service

City	Alameda	State/Province	CA	Country of Residence	US

Mailing Address of Inventor:

Address 1	15 Ferro Court		
Address 2			
City	Alameda	**State/Province**	CA
Postal Code	94502	**Country**	US

All Inventors Must Be Listed - Additional Inventor Information blocks may be generated within this form by selecting the **Add** button. Add

Correspondence Information:

Enter either Customer Number or complete the Correspondence Information section below.
For further information see 37 CFR 1.33(a).

☐ **An Address is being provided for the correspondence Information of this application.**

Customer Number	30349		
Email Address	docketing@jacolaw.com	Add Email	Remove Email

Application Information:

Title of the Invention	Method and System for Providing Real Time Analyte Sensor Calibration with Retrospective Backfill		
Attorney Docket Number	TS-02-180C01	**Small Entity Status Claimed**	☐
Application Type	Nonprovisional		
Subject Matter	Utility		
Total Number of Drawing Sheets (if any)	7	**Suggested Figure for Publication (if any)**	1

Under the Paperwork Reduction Act of 1995, no persons are required to respond to a collection of information unless it contains a valid OMB control number.

Application Data Sheet 37 CFR 1.76	Attorney Docket Number	TS-02-180C01
	Application Number	
Title of Invention	Method and System for Providing Real Time Analyte Sensor Calibration with Retrospective Backfill	

Publication Information:

☐ Request Early Publication (Fee required at time of Request 37 CFR 1.219)

☐ **Request Not to Publish.** I hereby request that the attached application not be published under 35 U.S.C. 122(b) and certify that the invention disclosed in the attached application **has not and will not** be the subject of an application filed in another country, or under a multilateral international agreement, that requires publication at eighteen months after filing.

Representative Information:

Representative information should be provided for all practitioners having a power of attorney in the application. Providing this information in the Application Data Sheet does not constitute a power of attorney in the application (see 37 CFR 1.32).
Either enter Customer Number or complete the Representative Name section below. If both sections are completed the customer Number will be used for the Representative Information during processing.

Please Select One:	◉ Customer Number	○ US Patent Practitioner	○ Limited Recognition (37 CFR 11.9)
Customer Number	30349		

Domestic Benefit/National Stage Information:

This section allows for the applicant to either claim benefit under 35 U.S.C. 119(e), 120, 121, or 365(c) or indicate National Stage entry from a PCT application. Providing this information in the application data sheet constitutes the specific reference required by 35 U.S.C. 119(e) or 120, and 37 CFR 1.78.

Prior Application Status	Pending		Remove
Application Number	Continuity Type	Prior Application Number	Filing Date (YYYY-MM-DD)
	Continuation of	12769635	2010-04-28
Prior Application Status	Expired		Remove
Application Number	Continuity Type	Prior Application Number	Filing Date (YYYY-MM-DD)
12769635	non provisional of	61173600	2009-04-29

Additional Domestic Benefit/National Stage Data may be generated within this form by selecting the **Add** button.

Foreign Priority Information:

This section allows for the applicant to claim priority to a foreign application. Providing this information in the application data sheet constitutes the claim for priority as required by 35 U.S.C. 119(b) and 37 CFR 1.55(d). When priority is claimed to a foreign application that is eligible for retrieval under the priority document exchange program (PDX)[i] the information will be used by the Office to automatically attempt retrieval pursuant to 37 CFR 1.55(h)(1) and (2). Under the PDX program, applicant bears the ultimate responsibility for ensuring that a copy of the foreign application is received by the Office from the participating foreign intellectual property office, or a certified copy of the foreign priority application is filed, within the time period specified in 37 CFR 1.55(g)(1).

Under the Paperwork Reduction Act of 1995, no persons are required to respond to a collection of information unless it contains a valid OMB control number.

Application Data Sheet 37 CFR 1.76	Attorney Docket Number	TS-02-180C01
	Application Number	
Title of Invention	Method and System for Providing Real Time Analyte Sensor Calibration with Retrospective Backfill	

Remove

Application Number	Country[i]	Filing Date (YYYY-MM-DD)	Access Code[i] (if applicable)

Additional Foreign Priority Data may be generated within this form by selecting the **Add** button.

Statement under 37 CFR 1.55 or 1.78 for AIA (First Inventor to File) Transition Applications

☐ This application (1) claims priority to or the benefit of an application filed before March 16, 2013 and (2) also contains, or contained at any time, a claim to a claimed invention that has an effective filing date on or after March 16, 2013.

Authorization to Permit Access:

☒ Authorization to Permit Access to the Instant Application by the Participating Offices

If checked, the undersigned hereby grants the USPTO authority to provide the European Patent Office (EPO), the Japan Patent Office (JPO), the Korean Intellectual Property Office (KIPO), the World Intellectual Property Office (WIPO), and any other intellectual property offices in which a foreign application claiming priority to the instant patent application is filed access to the instant patent application. See 37 CFR 1.14(c) and (h). This box should not be checked if the applicant does not wish the EPO, JPO, KIPO, WIPO, or other intellectual property office in which a foreign application claiming priority to the instant patent application is filed to have access to the instant patent application.

In accordance with 37 CFR 1.14(h)(3), access will be provided to a copy of the instant patent application with respect to: 1) the instant patent application-as-filed; 2) any foreign application to which the instant patent application claims priority under 35 U.S.C. 119(a)-(d) if a copy of the foreign application that satisfies the certified copy requirement of 37 CFR 1.55 has been filed in the instant patent application; and 3) any U.S. application-as-filed from which benefit is sought in the instant patent application.

In accordance with 37 CFR 1.14(c), access may be provided to information concerning the date o f filing this Authorization.

Applicant Information:

Providing assignment information in this section does not substitute for compliance with any requirement of part 3 of Title 37 of CFR to have an assignment recorded by the Office.

Under the Paperwork Reduction Act of 1995, no persons are required to respond to a collection of information unless it contains a valid OMB control number.

Application Data Sheet 37 CFR 1.76	Attorney Docket Number	TS-02-180C01
	Application Number	
Title of Invention	Method and System for Providing Real Time Analyte Sensor Calibration with Retrospective Backfill	

Applicant 1

If the applicant is the inventor (or the remaining joint inventor or inventors under 37 CFR 1.45), this section should not be completed. The information to be provided in this section is the name and address of the legal representative who is the applicant under 37 CFR 1.43; or the name and address of the assignee, person to whom the inventor is under an obligation to assign the invention, or person who otherwise shows sufficient proprietary interest in the matter who is the applicant under 37 CFR 1.46. If the applicant is an applicant under 37 CFR 1.46 (assignee, person to whom the inventor is obligated to assign, or person who otherwise shows sufficient proprietary interest) together with one or more joint inventors, then the joint inventor or inventors who are also the applicant should be identified in this section.

Clear

- (●) Assignee
- ( ) Legal Representative under 35 U.S.C. 117
- ( ) Joint Inventor
- ( ) Person to whom the inventor is obligated to assign.
- ( ) Person who shows sufficient proprietary interest

If applicant is the legal representative, indicate the authority to file the patent application, the inventor is:

Name of the Deceased or Legally Incapacitated Inventor :

If the Applicant is an Organization check here. ☒

Organization Name	Abbott Diabetes Care Inc.		
Mailing Address Information For Applicant:			
Address 1	1360 South Loop Road		
Address 2			
City	Alameda	**State/Province**	CA
Country	US	Postal Code	94502
Phone Number	510.749.5400	Fax Number	510.749.5401
Email Address			

Additional Applicant Data may be generated within this form by selecting the Add button.

Non-Applicant Assignee Information:

Providing assignment information in this section does not subsitute for compliance with any requirement of part 3 of Title 37 of CFR to have an assignment recorded by the Office.

Assignee 1

Complete this section only if non-applicant assignee information is desired to be included on the patent application publication in accordance with 37 CFR 1.215(b). Do not include in this section an applicant under 37 CFR 1.46 (assignee, person to whom the inventor is obligated to assign, or person who otherwise shows sufficient proprietary interest), as the patent application publication will include the name of the applicant(s).

If the Assignee is an Organization check here. ☐

Under the Paperwork Reduction Act of 1995, no persons are required to respond to a collection of information unless it contains a valid OMB control number.

Application Data Sheet 37 CFR 1.76	Attorney Docket Number	TS-02-180C01
	Application Number	
Title of Invention	Method and System for Providing Real Time Analyte Sensor Calibration with Retrospective Backfill	

Prefix	**Given Name**	Middle Name	**Family Name**	Suffix

Mailing Address Information For Non-Applicant Assignee:			
Address 1			
Address 2			
City		**State/Province**	
Country i		Postal Code	
Phone Number		Fax Number	
Email Address			

Additional Assignee Data may be generated within this form by selecting the Add button.

Signature:

NOTE: This form must be signed in accordance with 37 CFR 1.33. See 37 CFR 1.4 for signature requirements and certifications.

Signature	/Seong-Kun Oh/			Date (YYYY-MM-DD)	2013-06-24
First Name	Seong-Kun	Last Name	Oh	Registration Number	48210

Additional Signature may be generated within this form by selecting the Add button.

This collection of information is required by 37 CFR 1.76. The information is required to obtain or retain a benefit by the public which is to file (and by the USPTO to process) an application. Confidentiality is governed by 35 U.S.C. 122 and 37 CFR 1.14. This collection is estimated to take 23 minutes to complete, including gathering, preparing, and submitting the completed application data sheet form to the USPTO. Time will vary depending upon the individual case. Any comments on the amount of time you require to complete this form and/or suggestions for reducing this burden, should be sent to the Chief Information Officer, U.S. Patent and Trademark Office, U.S. Department of Commerce, P.O. Box 1450, Alexandria, VA 22313-1450. DO NOT SEND FEES OR COMPLETED FORMS TO THIS ADDRESS. **SEND TO: Commissioner for Patents, P.O. Box 1450, Alexandria, VA 22313-1450.**

SCORE Placeholder Sheet for IFW Content

Application Number: 13925694 Document Date: 06/24/2013

The presence of this form in the IFW record indicates that the following document type was received in electronic format on the date identified above. This content is stored in the SCORE database.

- Drawings – Other than Black and White Line Drawings

Since this was an electronic submission, there is no physical artifact folder, no artifact folder is recorded in PALM, and no paper documents or physical media exist. The TIFF images in the IFW record were created from the original documents that are stored in SCORE.

To access the documents in the SCORE database, refer to instructions developed by SIRA.

At the time of document entry (noted above):

- Examiners may access SCORE content via the eDAN interface.
- Other USPTO employees can bookmark the current SCORE URL (http://es/ScoreAccessWeb/).
- External customers may access SCORE content via the Public and Private PAIR interfaces.

Form Revision Date: February 8, 2006