US 20060224109A1

(19) United States

(12) Patent Application Publication

(10) Pub. No.: US 2006/0224109 A1

(43) Pub. Date: Oct. 5, 2006

Steil et al.

(54) **CLOSED LOOP SYSTEM FOR CONTROLLING INSULIN INFUSION**

(75) Inventors: **Garry M. Steil**, Pasadena, CA (US); **Kerstin Rebrin**, South Pasadena, CA (US)

Correspondence Address:
MEDTRONIC MINIMED INC.
18000 DEVONSHIRE STREET
NORTHRIDGE, CA 91325-1219 (US)

(73) Assignee: **MEDTRONIC MINIMED, INC.**

(21) Appl. No.: **11/417,426**

(22) Filed: **May 3, 2006**

Related U.S. Application Data

(60) Division of application No. 10/335,275, filed on Dec. 31, 2002, which is a continuation-in-part of application No. 09/586,175, filed on Jun. 1, 2000, now Pat. No. 6,558,351.

(60) Provisional application No. 60/162,255, filed on Oct. 29, 1999. Provisional application No. 60/137,601, filed on Jun. 3, 1999.

Publication Classification

(51) **Int. Cl.**
A61M 31/00 (2006.01)
A61B 5/05 (2006.01)

(52) **U.S. Cl.** **604/66**; 604/503; 600/347

(57) **ABSTRACT**

A closed loop infusion system controls the rate that fluid is infused into the body of a user. The closed loop infusion system includes a sensor system, a controller, and a delivery system. The sensor system includes a sensor for monitoring a condition of the user. The sensor produces a sensor signal, which is representative of the condition of the user. The sensor signal is used to generate a controller input. The controller uses the controller input to generate commands to operate the delivery system. The delivery system infuses a liquid into the user at a rate dictated by the commands from the controller. Preferably, the sensor system monitors the glucose concentration in the body of the user, and the liquid infused by the delivery system into the body of the user includes insulin.

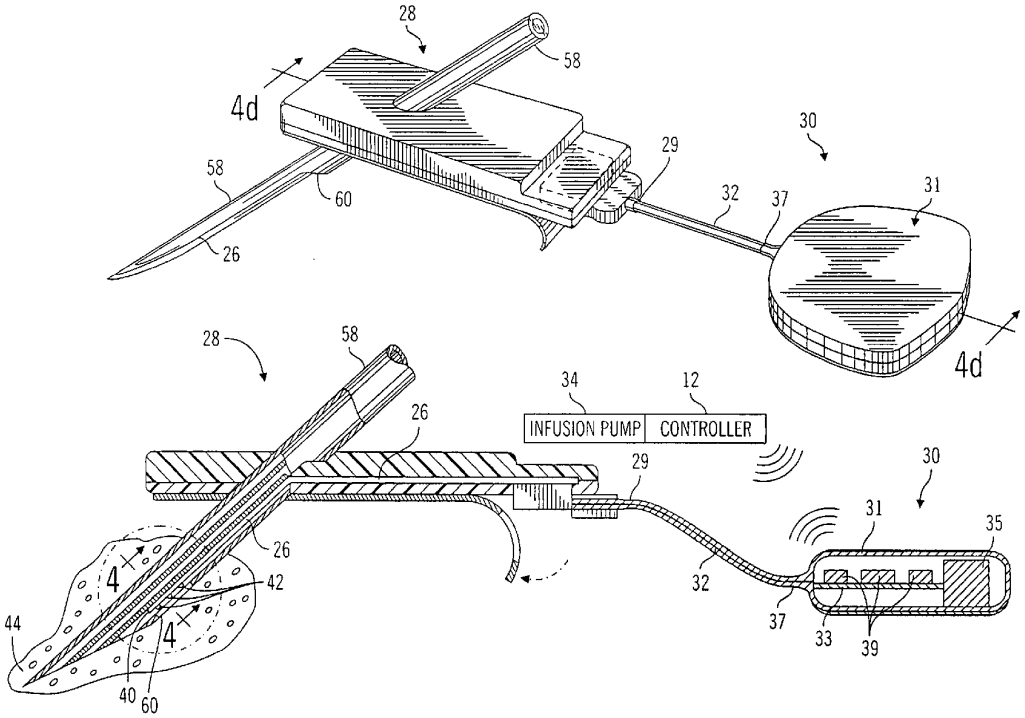

DEXCOM
EXHIBIT 1232

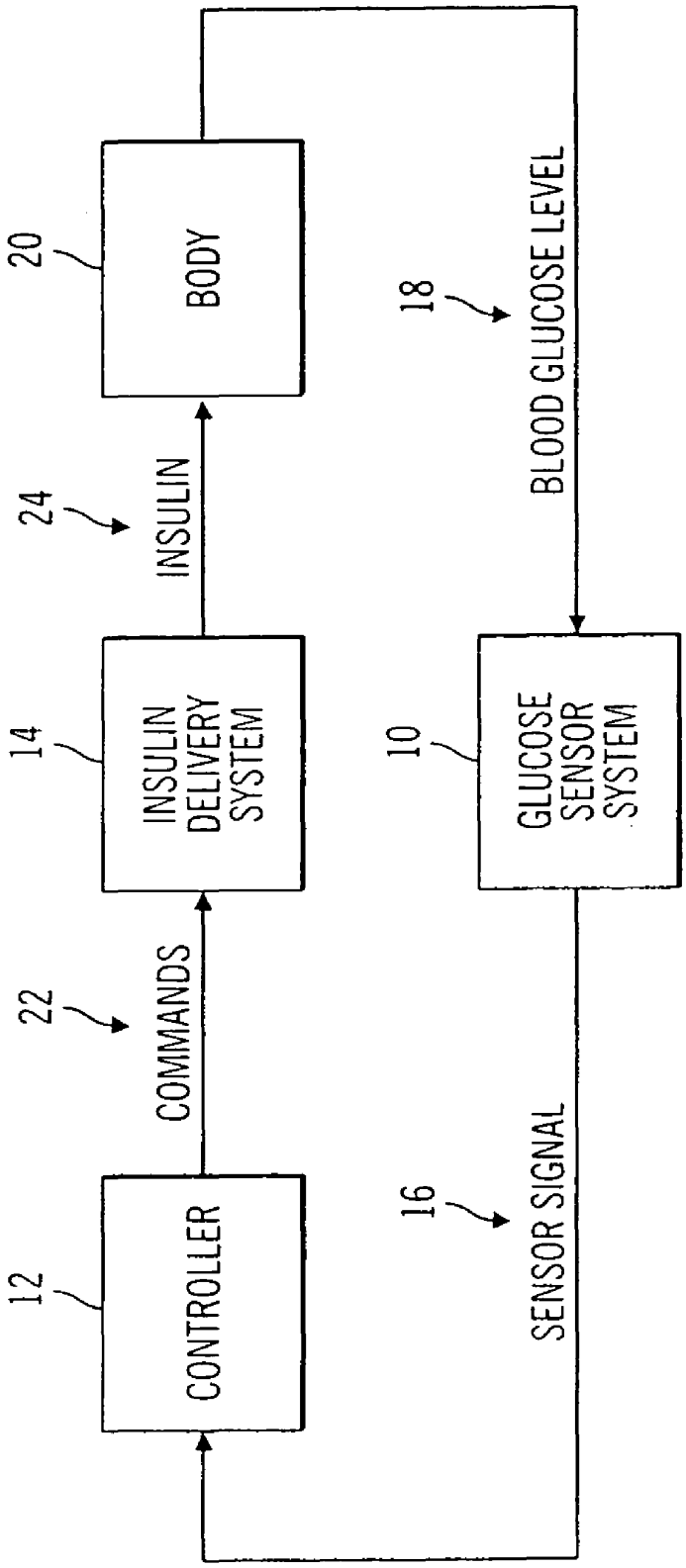
12
CONTROLLER
22
COMMANDS
14
INSULIN DELIVERY SYSTEM
24
INSULIN
20
BODY
16
SENSOR SIGNAL
10
GLUCOSE SENSOR SYSTEM
18
BLOOD GLUCOSE LEVEL

FIG. 1

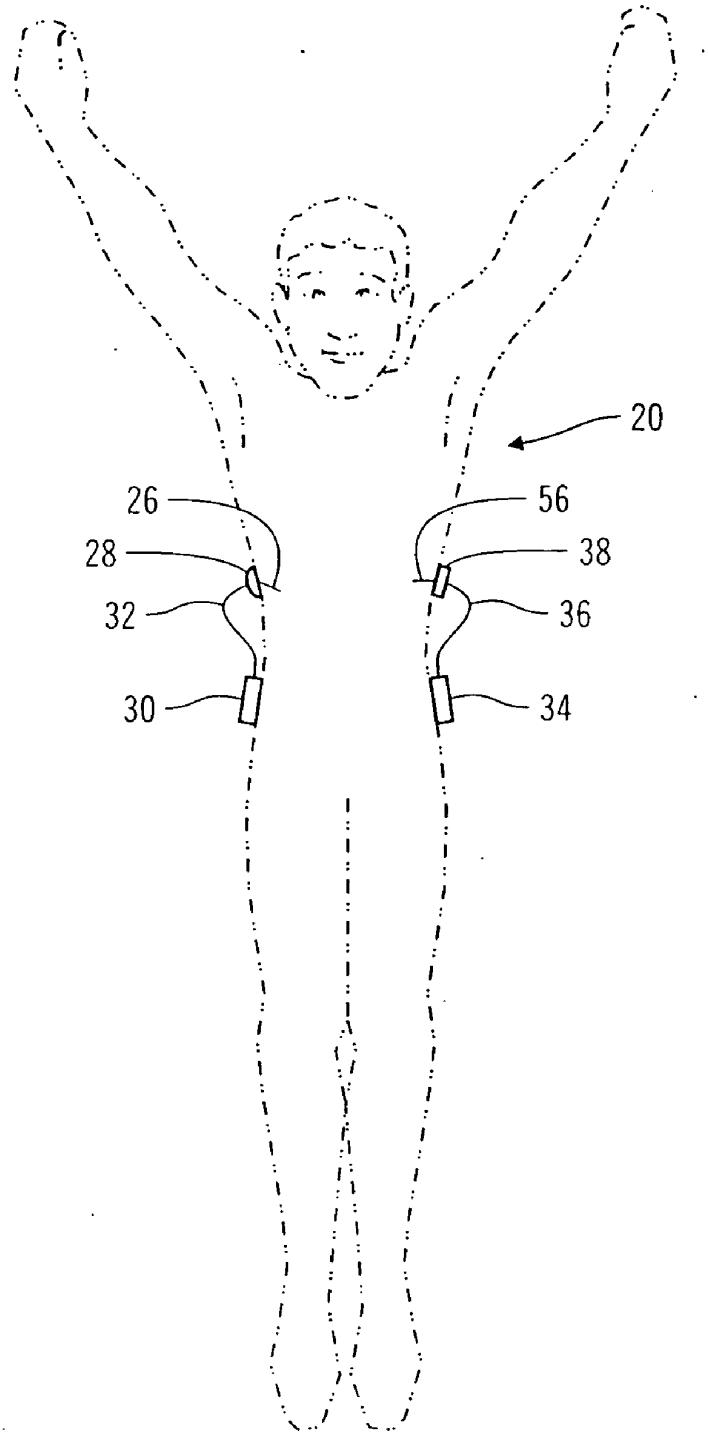

FIG. 2

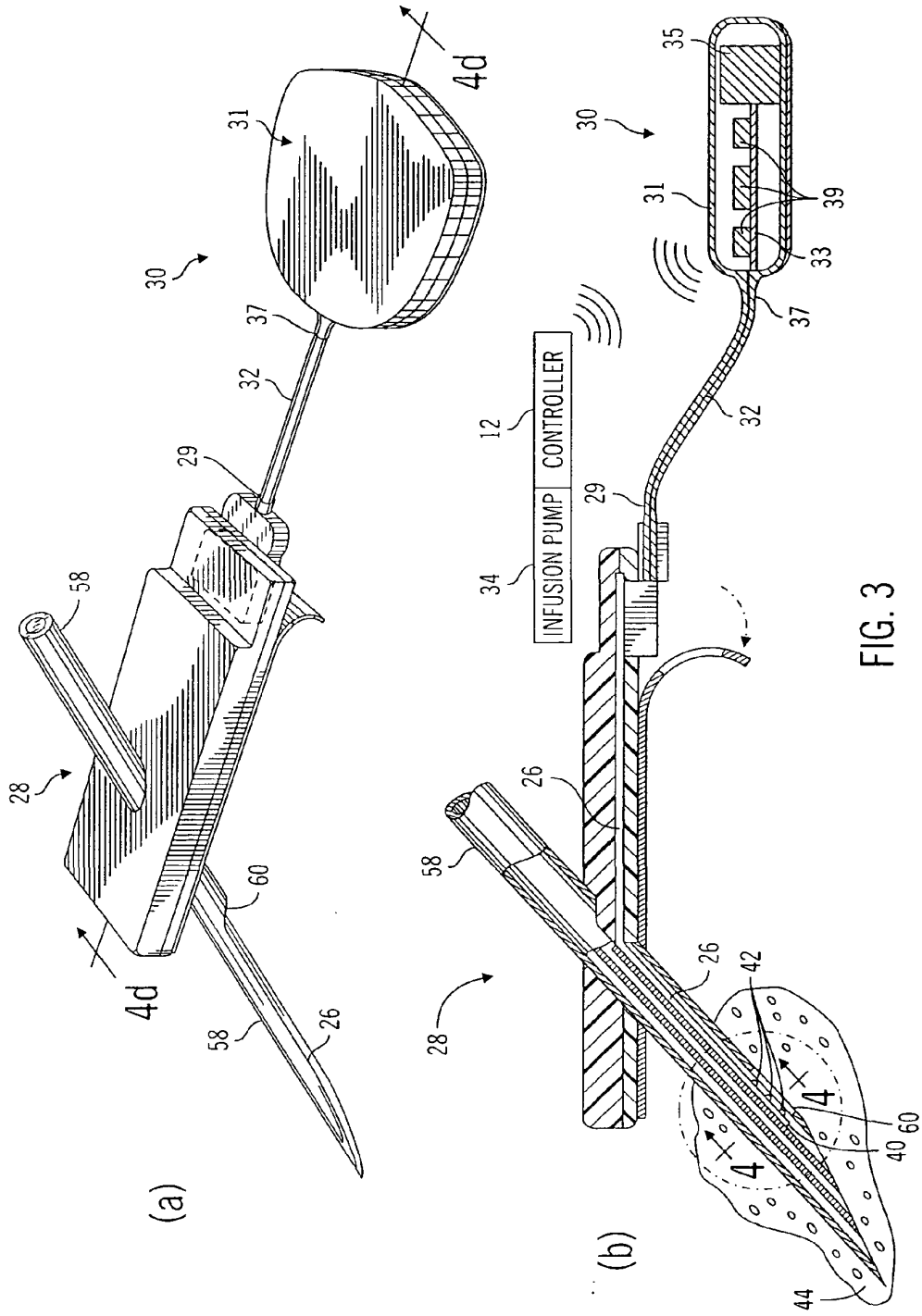
(a)
(b)
4d
4d
4
4
INFUSION PUMP
CONTROLLER
12
26
28
29
30
31
32
33
34
35
37
39
40
42
44
58
60

FIG. 3

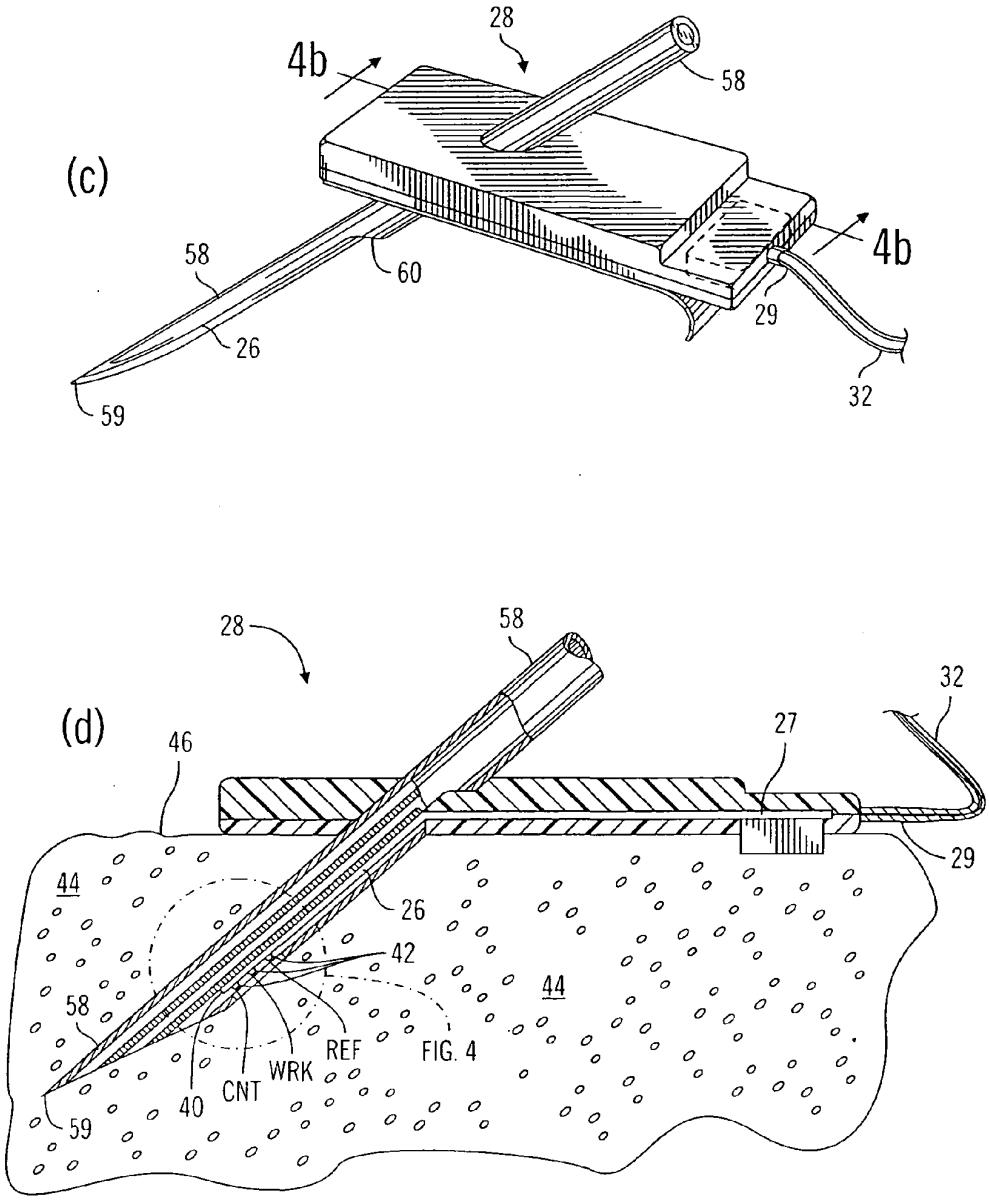
(c)
28
4b
58
4b
58
60
26
29
32
59
(d)
28
58
32
46
27
29
44
26
42
44
58
REF
FIG. 4
WRK
CNT
40
59

FIG. 3

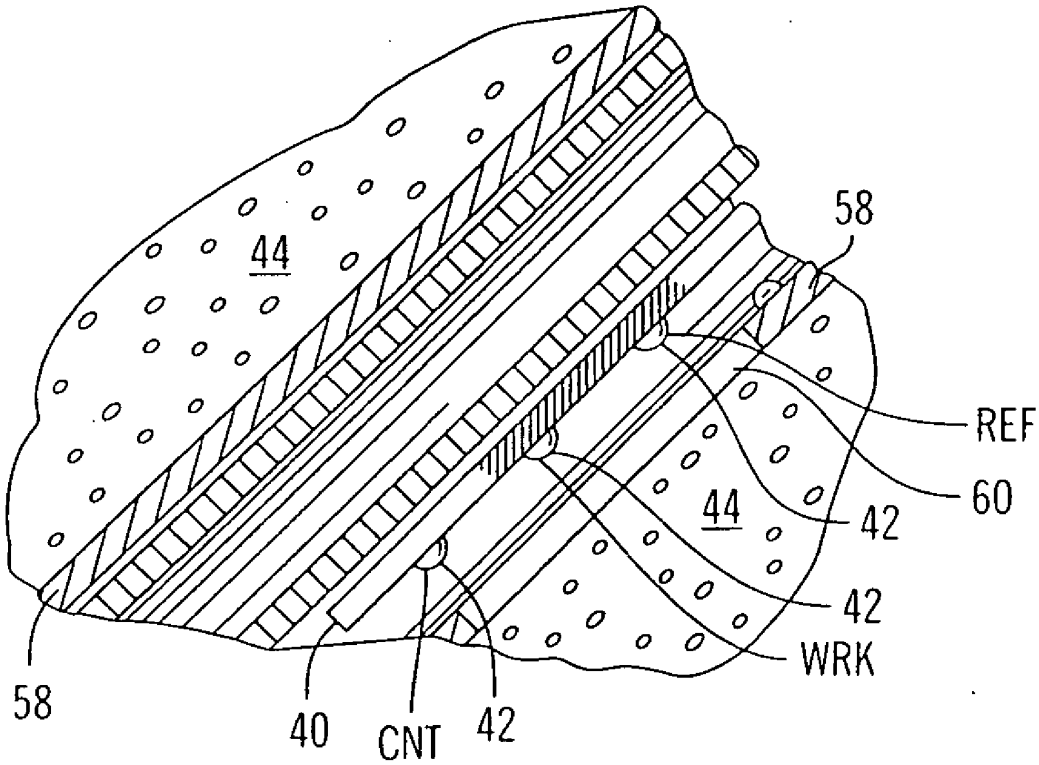

FIG. 4

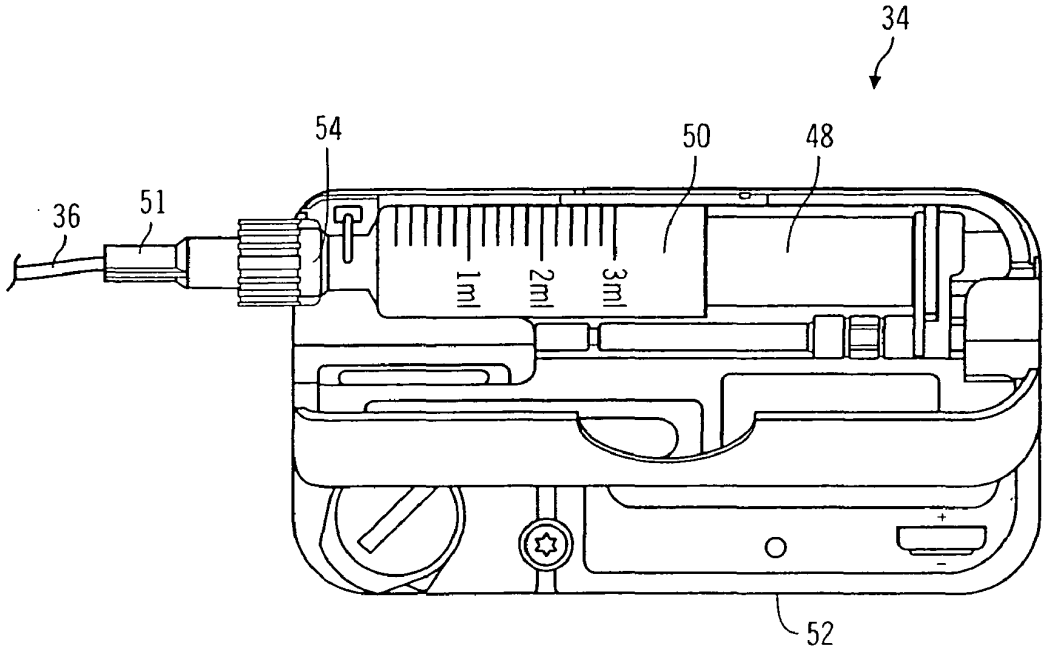

FIG. 5

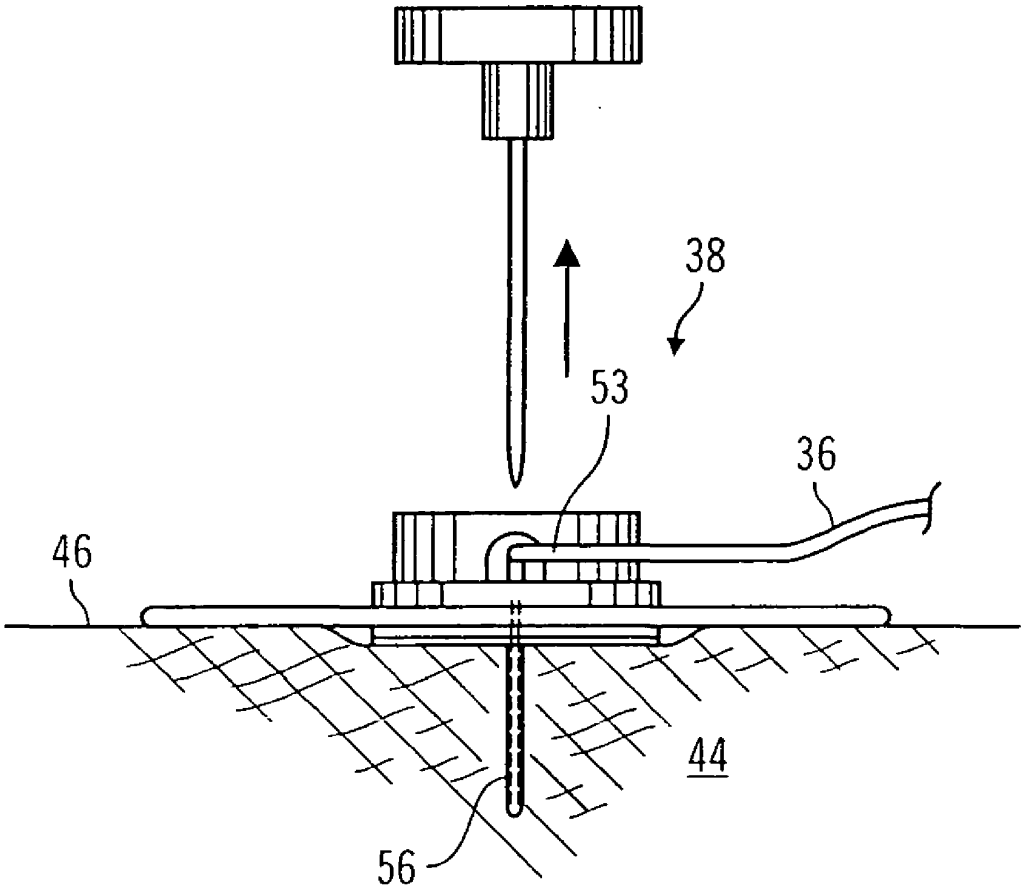

FIG. 6

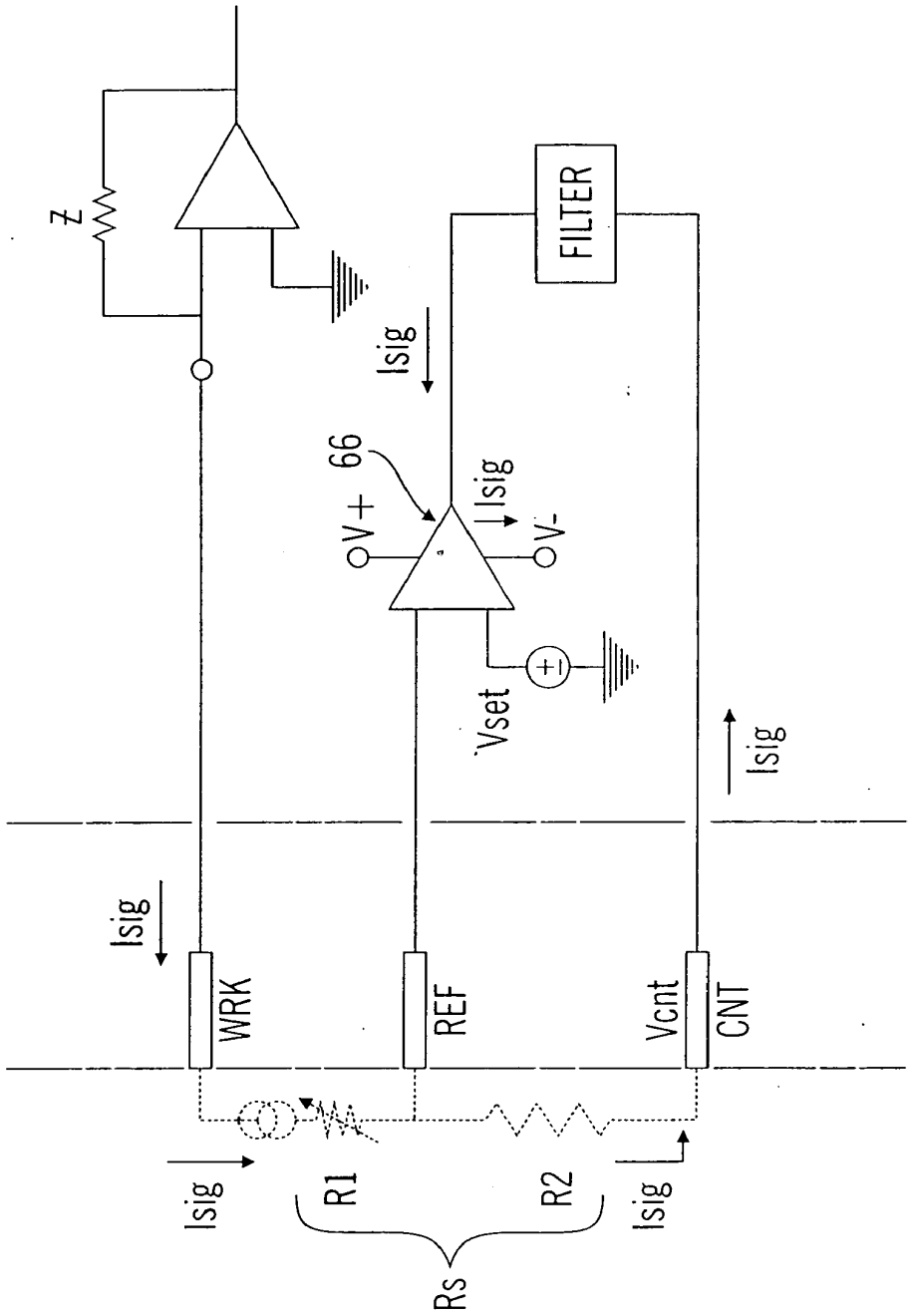
Z
FILTER
Isig
66
V+
Isig
V-
Vset
Isig
Isig
WRK
REF
Vcnt
CNT
Isig
R1
R2
Isig
Rs

FIG. 7

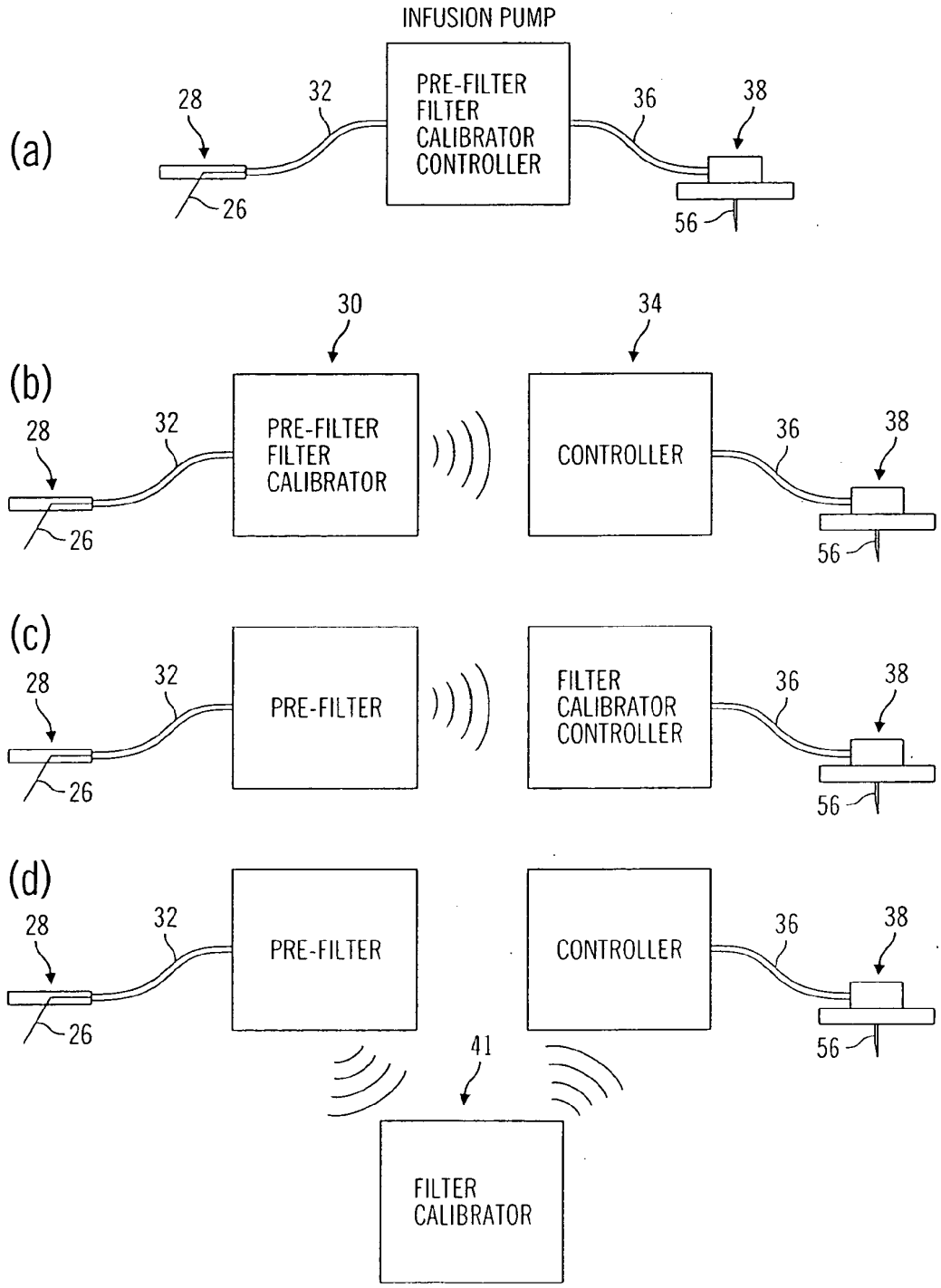
INFUSION PUMP
(a)
28
32
PRE-FILTER
FILTER
CALIBRATOR
CONTROLLER
36
38
26
56
(b)
30
34
28
32
PRE-FILTER
FILTER
CALIBRATOR
CONTROLLER
36
38
26
56
(c)
28
32
PRE-FILTER
FILTER
CALIBRATOR
CONTROLLER
36
38
26
56
(d)
28
32
PRE-FILTER
CONTROLLER
36
38
26
56
41
FILTER
CALIBRATOR

FIG. 8

COMPONENTS	ALTERNATIVE, FIG. 8(a)		PREFERRED EMBODIMENT, FIG. 8(b)		ALTERNATIVE, FIG. 8(c)		ALTERNATIVE, FIG. 8(d)		
	TELEMETERED CHARACTERISTIC MONITOR TRANSMITTER	INFUSION PUMP	TELEMETERED CHARACTERISTIC MONITOR TRANSMITTER	INFUSION PUMP	TELEMETERED CHARACTERISTIC MONITOR TRANSMITTER	INFUSION PUMP	TELEMETERED CHARACTERISTIC MONITOR TRANSMITTER	SUPPLEMENTAL DEVICE	INFUSION PUMP
PRE-FILTERS		X	X		X		X		
FILTERS		X	X			X		X	
CALIBRATOR		X	X			X		X	
CONTROLLER		X		X		X			X

FIG. 9

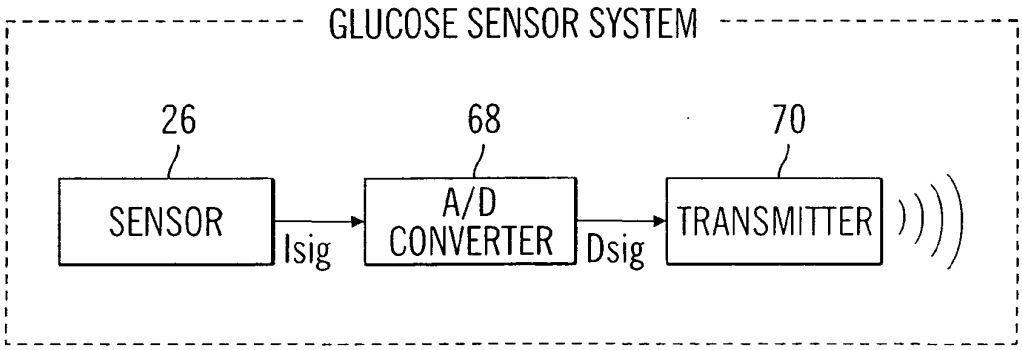
GLUCOSE SENSOR SYSTEM
26
68
70
SENSOR
Isig
A/D CONVERTER
Dsig
TRANSMITTER

FIG. 10

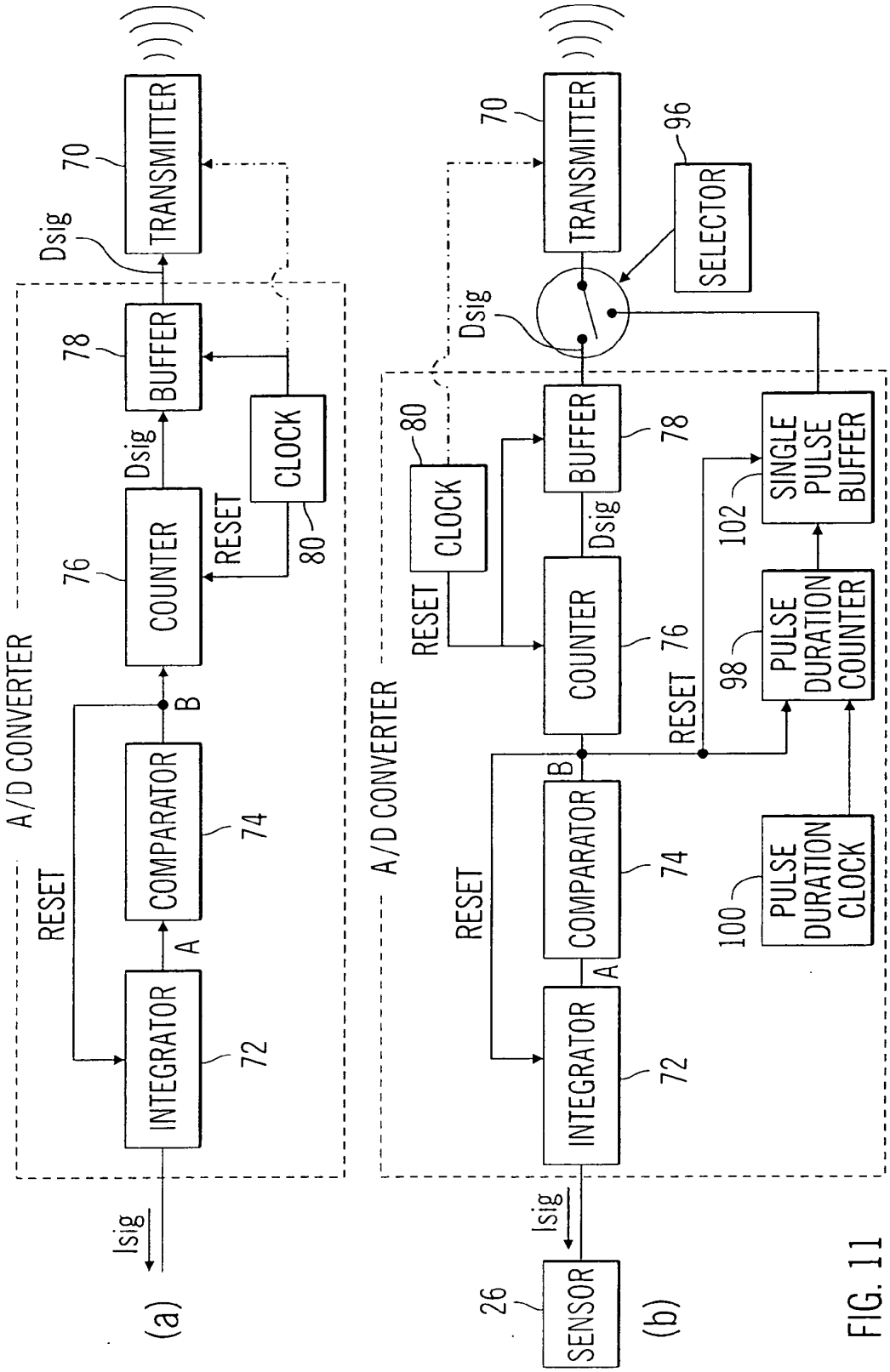
A/D CONVERTER
RESET
INTEGRATOR
72
A
COMPARATOR
74
B
COUNTER
76
Dsig
BUFFER
78
Dsig
TRANSMITTER
70
CLOCK
80
RESET
Isig
(a)
A/D CONVERTER
RESET
INTEGRATOR
72
A
COMPARATOR
74
B
COUNTER
76
Dsig
BUFFER
78
RESET
CLOCK
80
Dsig
TRANSMITTER
70
SELECTOR
96
SINGLE PULSE BUFFER
102
PULSE DURATION COUNTER
98
PULSE DURATION CLOCK
100
Isig
SENSOR
26
(b)

FIG. 11

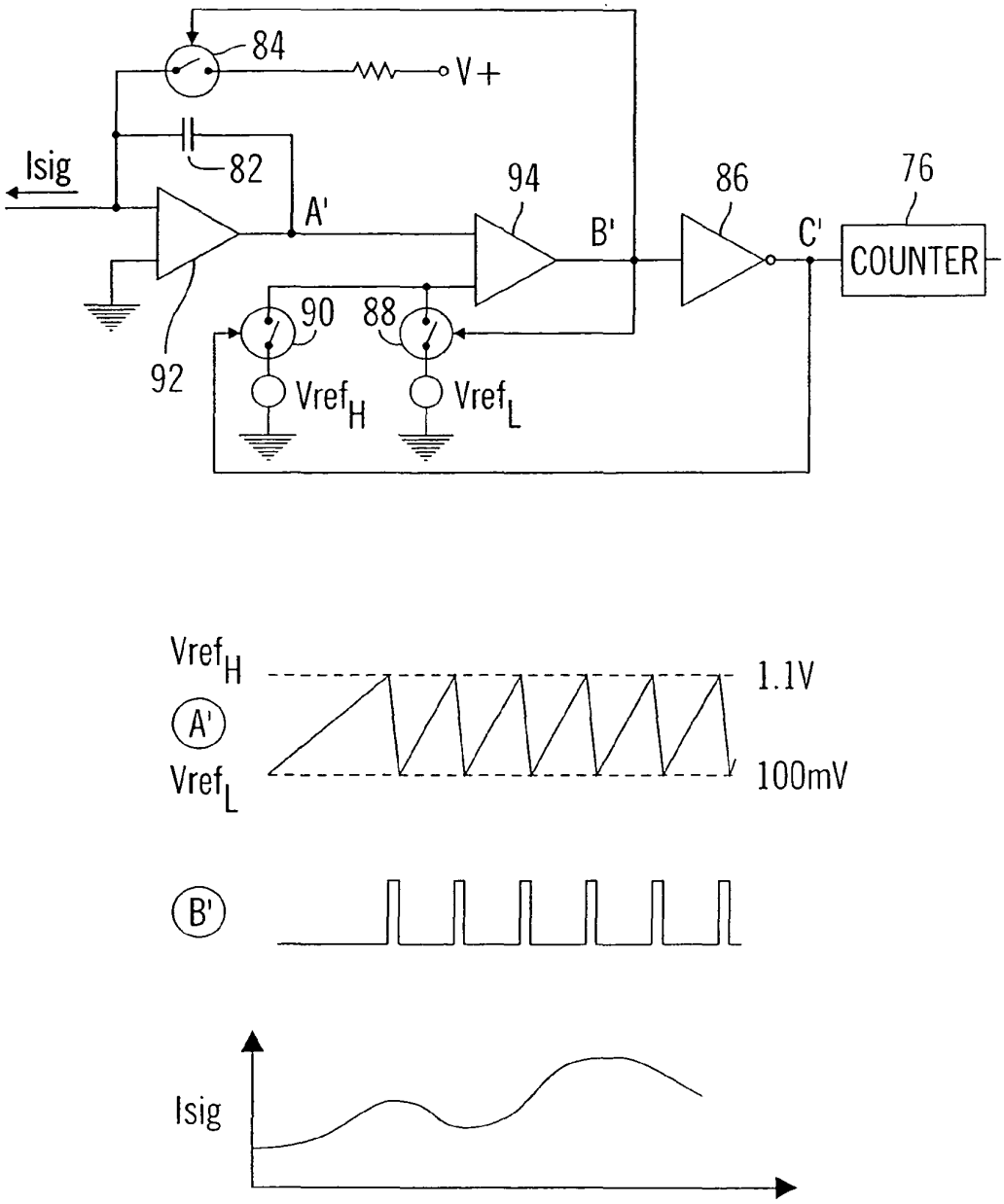
84
V+
Isig
82
A'
94
B'
86
C'
76
COUNTER
90
88
92
VrefH
VrefL
VrefH
1.1V
A'
VrefL
100mV
B'
Isig

FIG. 12

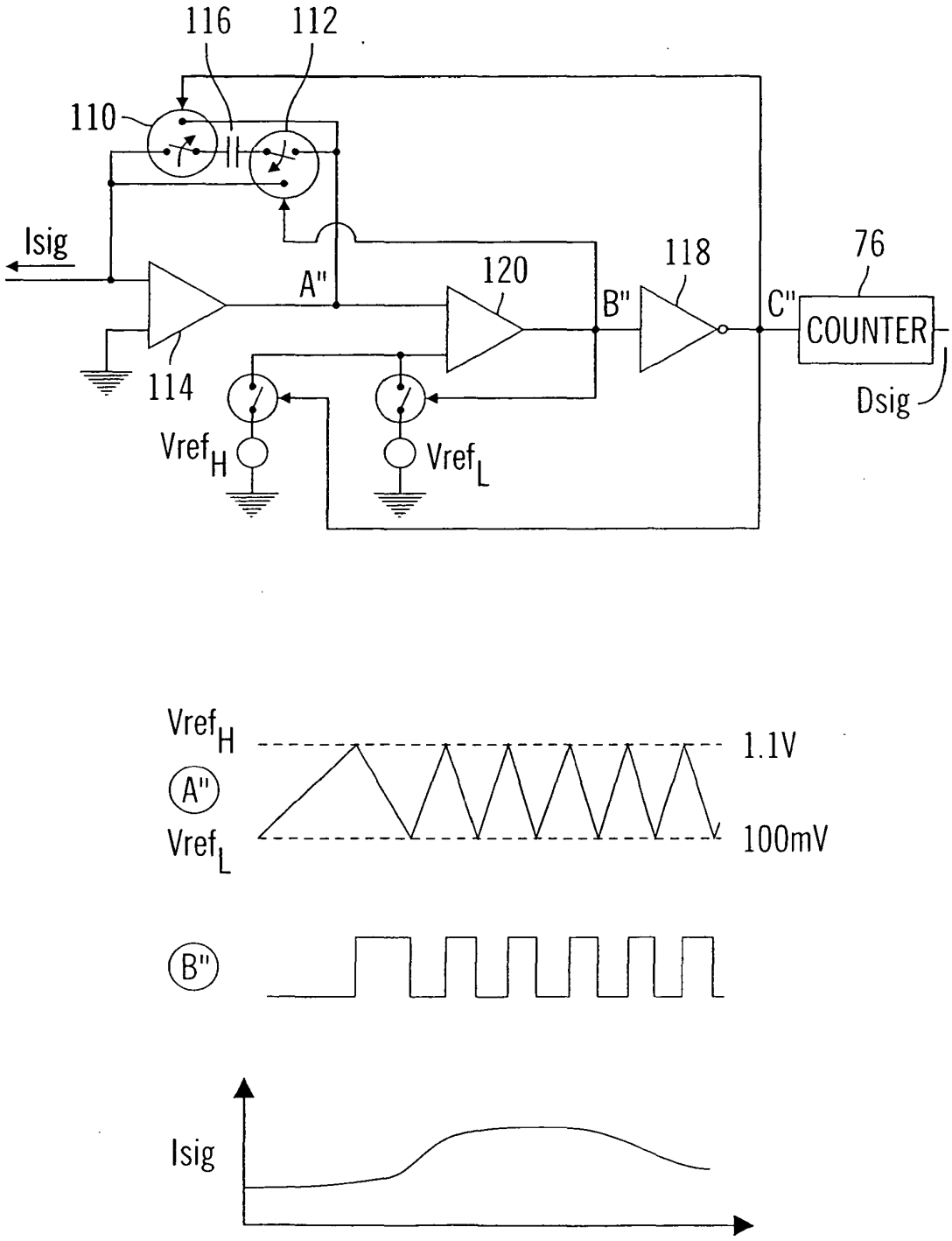
116
112
110
Isig
A"
120
118
76
B"
C"
COUNTER
114
Dsig
VrefH
VrefL
VrefH
1.1V
A"
VrefL
100mV
B"
Isig

FIG. 13

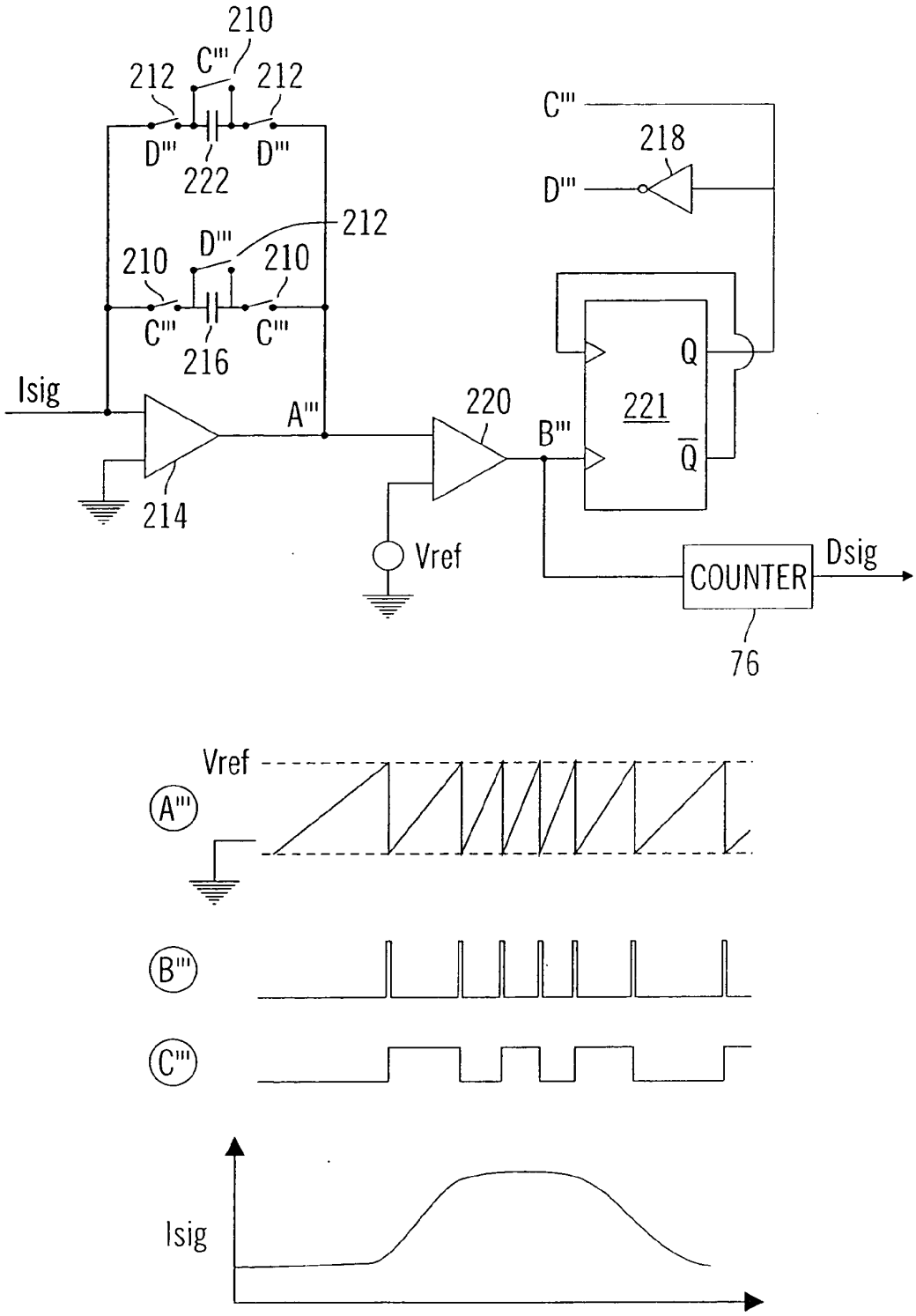
210
C'''
212
212
D'''
D'''
222
212
D'''
210
210
C'''
C'''
216
Isig
A'''
214
220
B'''
C'''
218
D'''
Q
221
Q̄
Vref
COUNTER
Dsig
76
Vref
A'''
B'''
C'''
Isig

FIG. 14

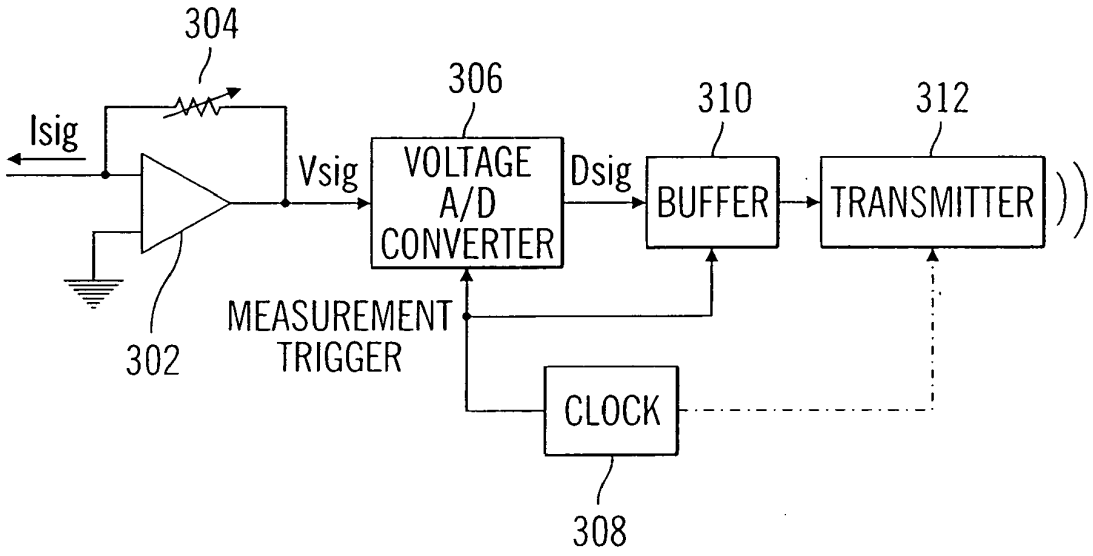
304
Isig
306
VOLTAGE
A/D
CONVERTER
Vsig
Dsig
310
BUFFER
312
TRANSMITTER
302
MEASUREMENT
TRIGGER
CLOCK
308

FIG. 15

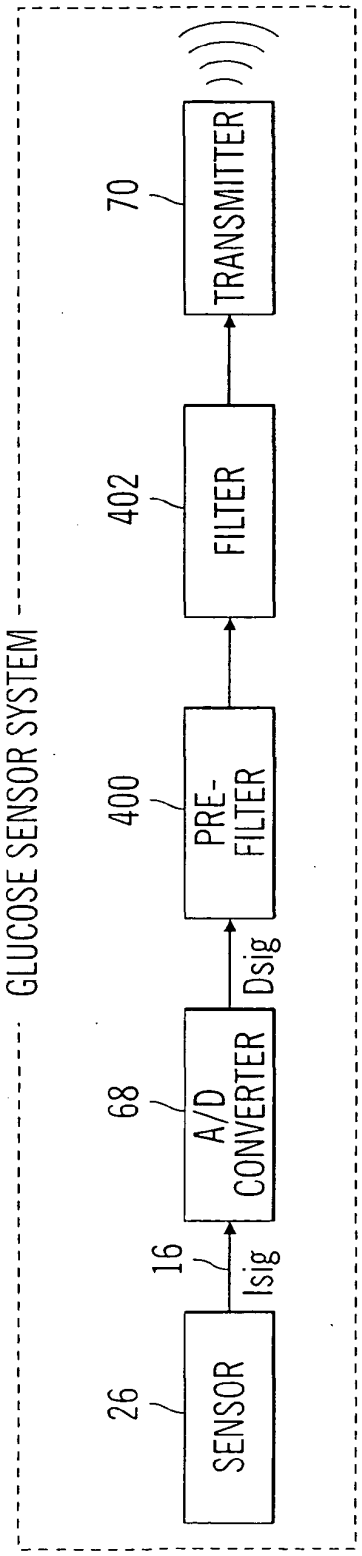
GLUCOSE SENSOR SYSTEM
26
SENSOR
16
Isig
68
A/D CONVERTER
Dsig
400
PRE-FILTER
402
FILTER
70
TRANSMITTER

FIG. 16

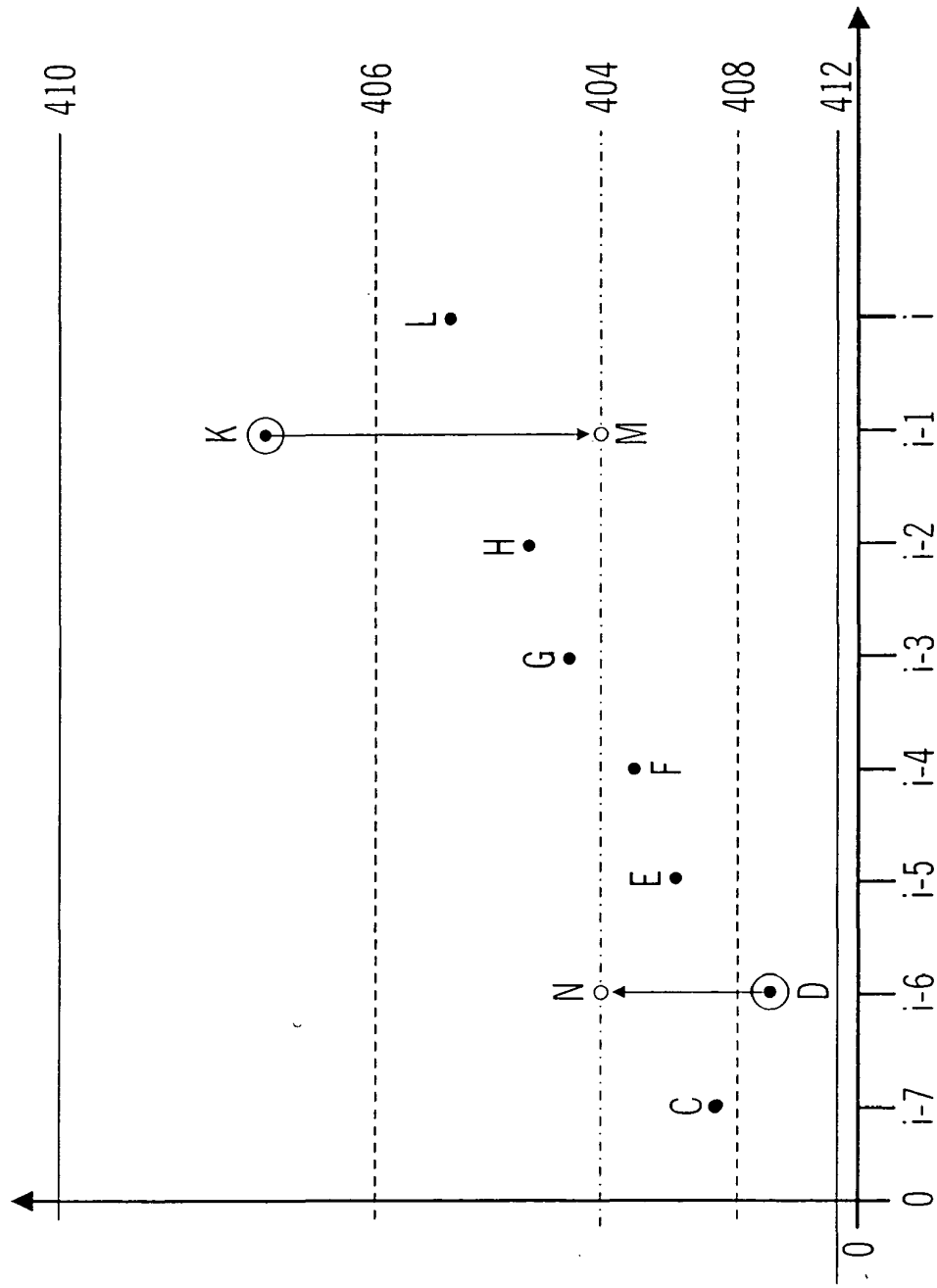

FIG. 17

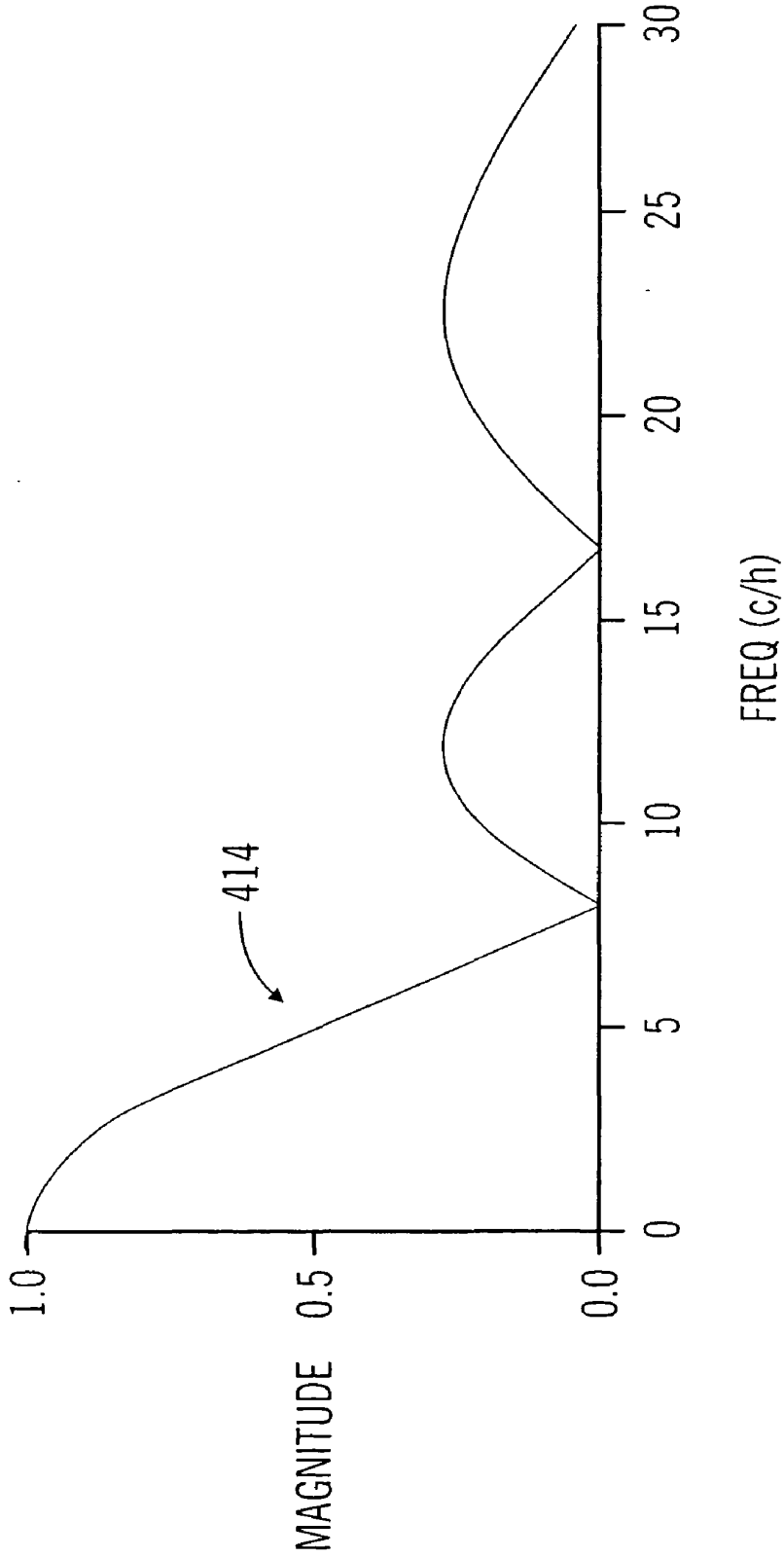

FIG. 18

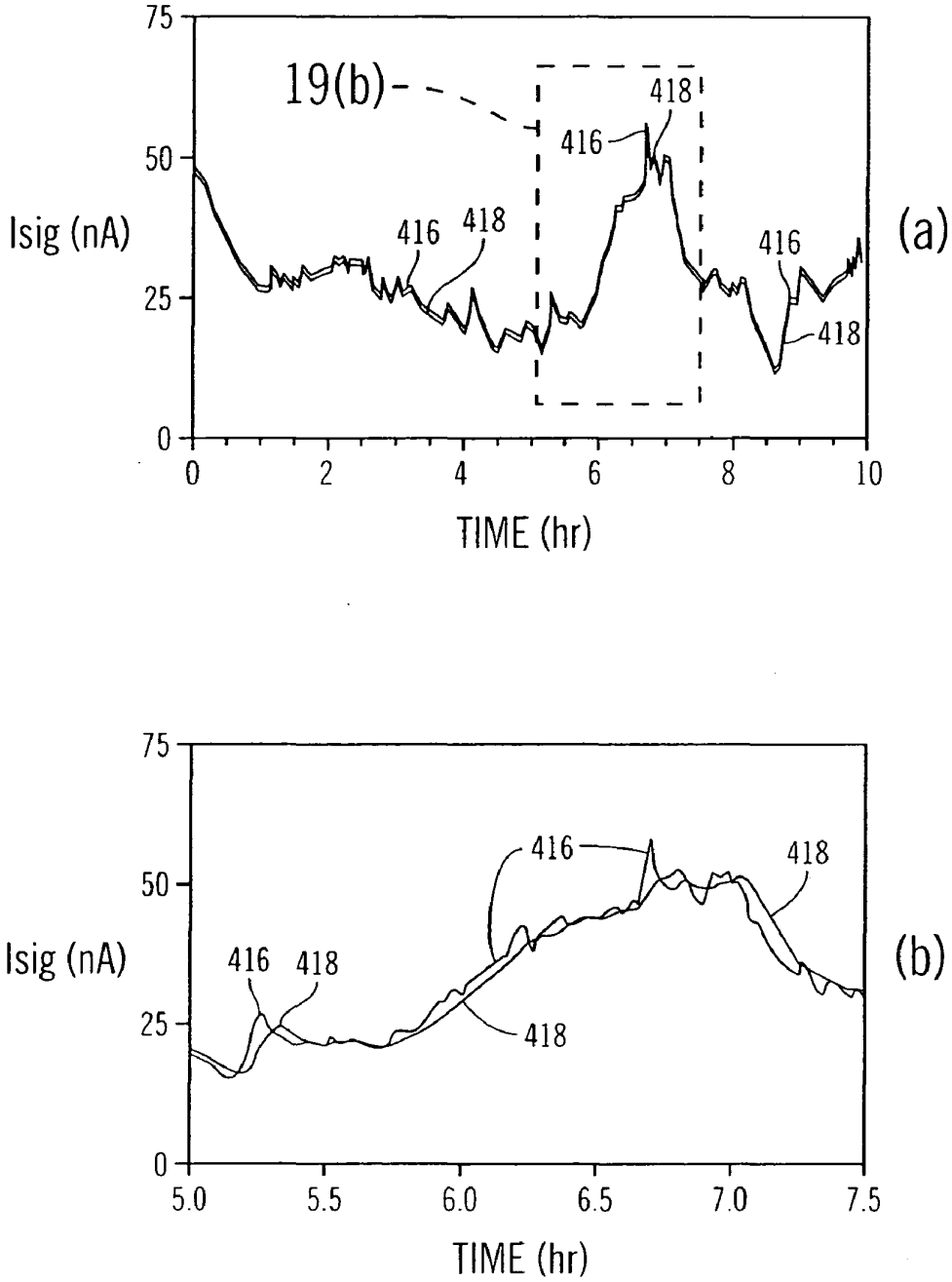
75
50
25
0
Isig (nA)
19(b)
416
418
416
418
416
418
(a)
0
2
4
6
8
10
TIME (hr)
75
50
25
0
Isig (nA)
416
418
416
418
418
(b)
5.0
5.5
6.0
6.5
7.0
7.5
TIME (hr)

FIG. 19

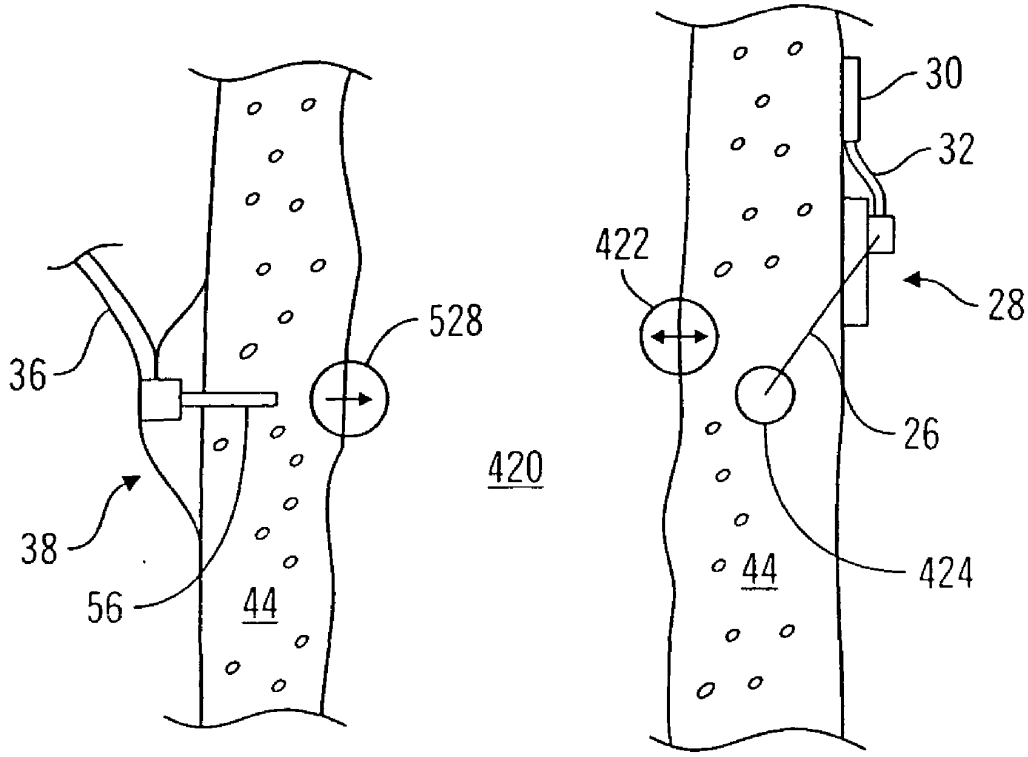

FIG. 20

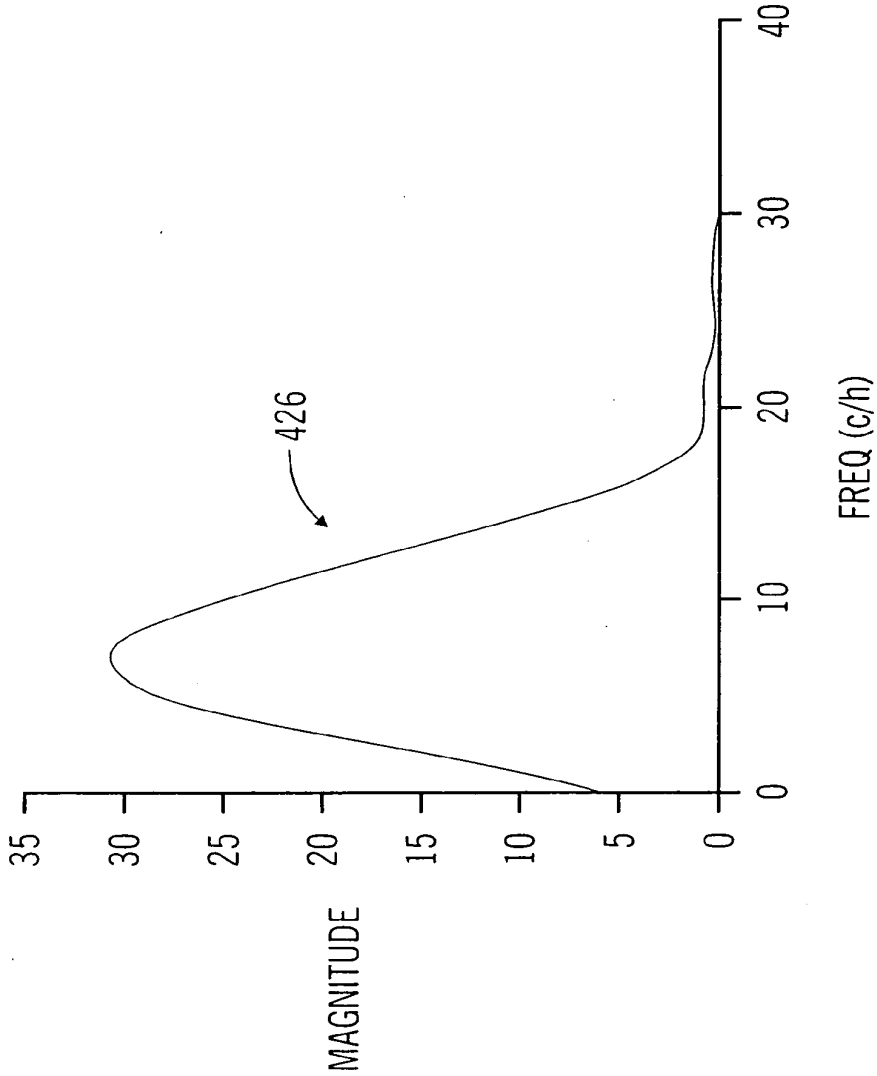

FIG. 21

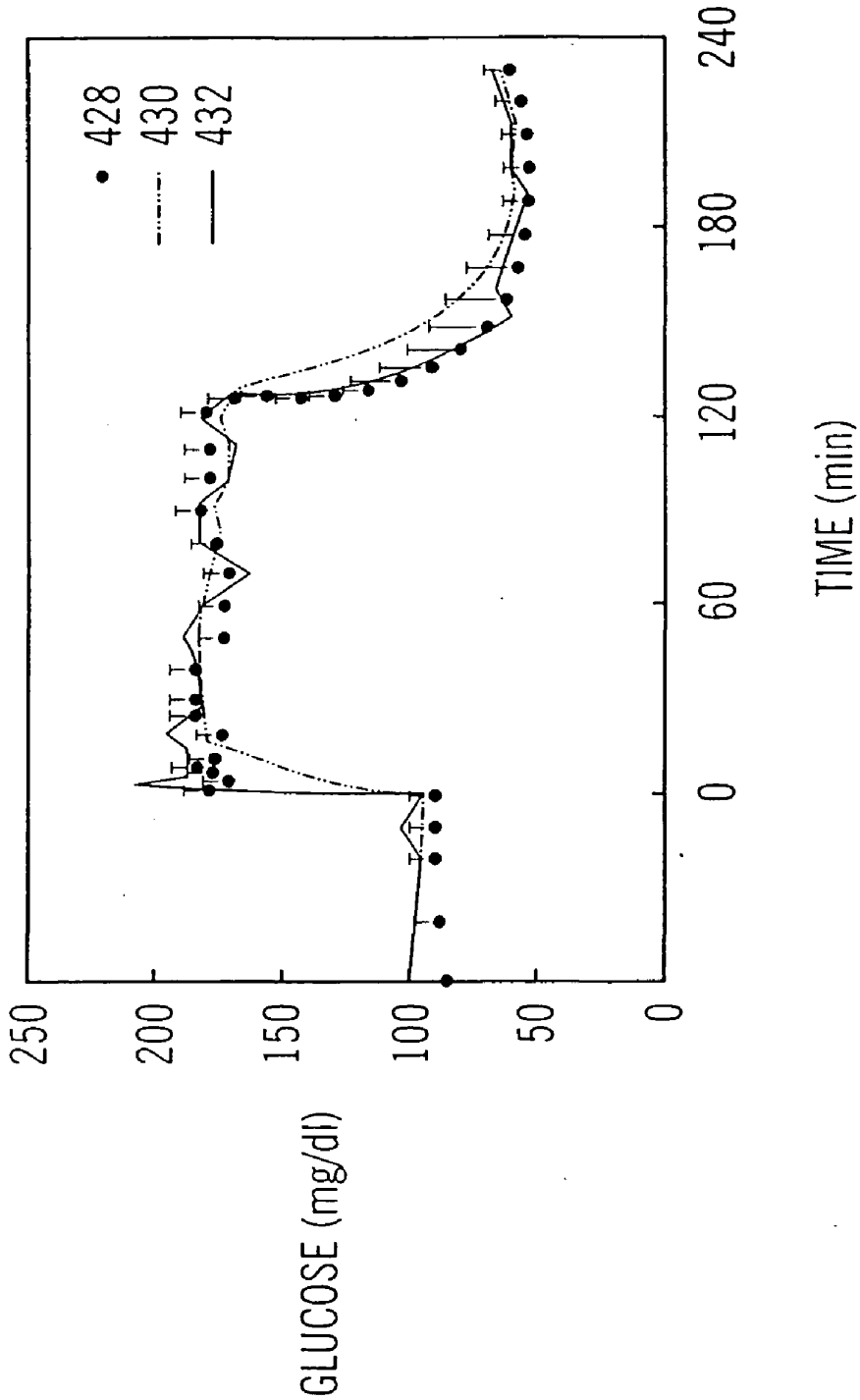
428
430
432
250
200
150
100
50
0
GLUCOSE (mg/dl)
0
60
120
180
240
TIME (min)

FIG. 22

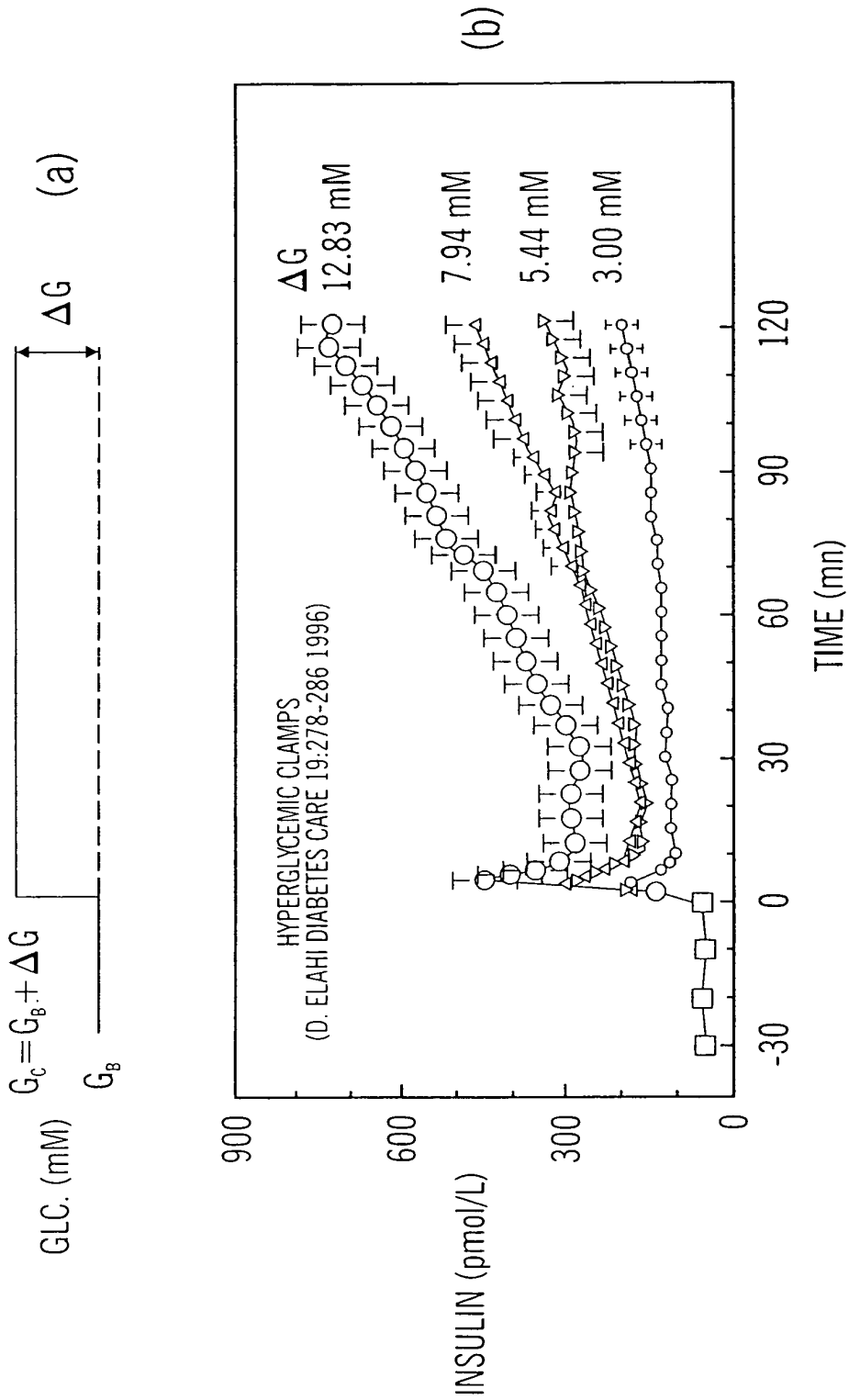
(a)
GLC. (mM)
$G_C = G_B + \Delta G$
G_B
ΔG
(b)
INSULIN (pmol/L)
900
600
300
0
HYPERGLYCEMIC CLAMPS
(D. ELAHI DIABETES CARE 19:278-286 1996)
ΔG
12.83 mM
7.94 mM
5.44 mM
3.00 mM
-30
0
30
60
90
120
TIME (mn)

FIG. 23

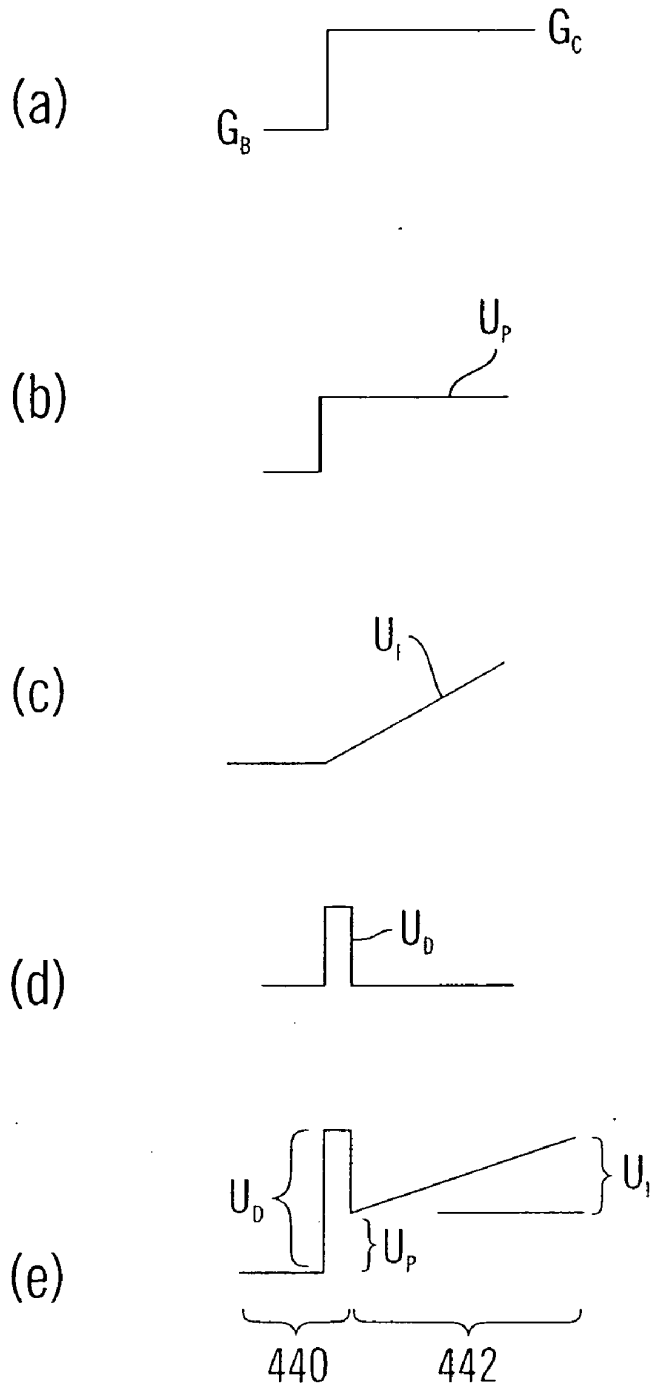

FIG. 24

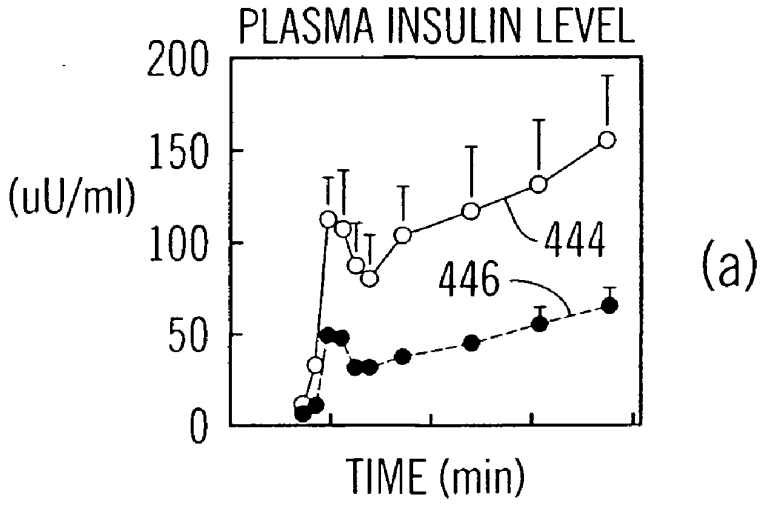
PLASMA INSULIN LEVEL
200
150
100
50
0
(uU/ml)
444
446
TIME (min)
(a)

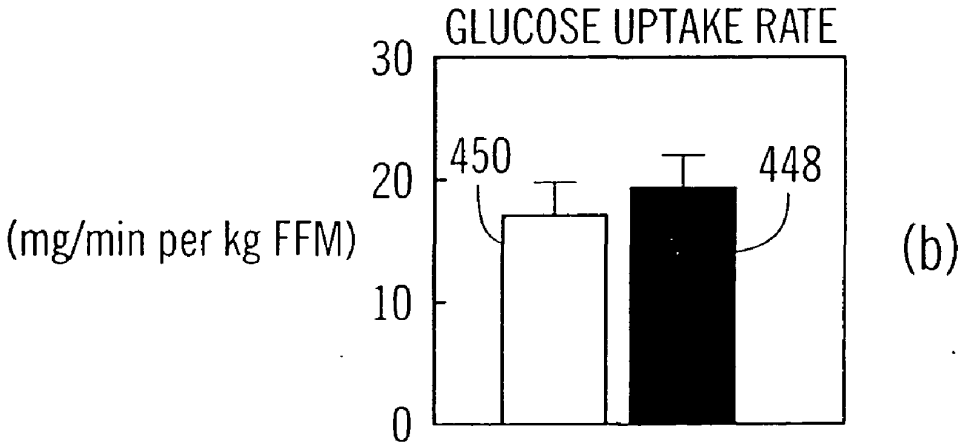
GLUCOSE UPTAKE RATE
30
20
10
0
(mg/min per kg FFM)
450
448
(b)

FIG. 25

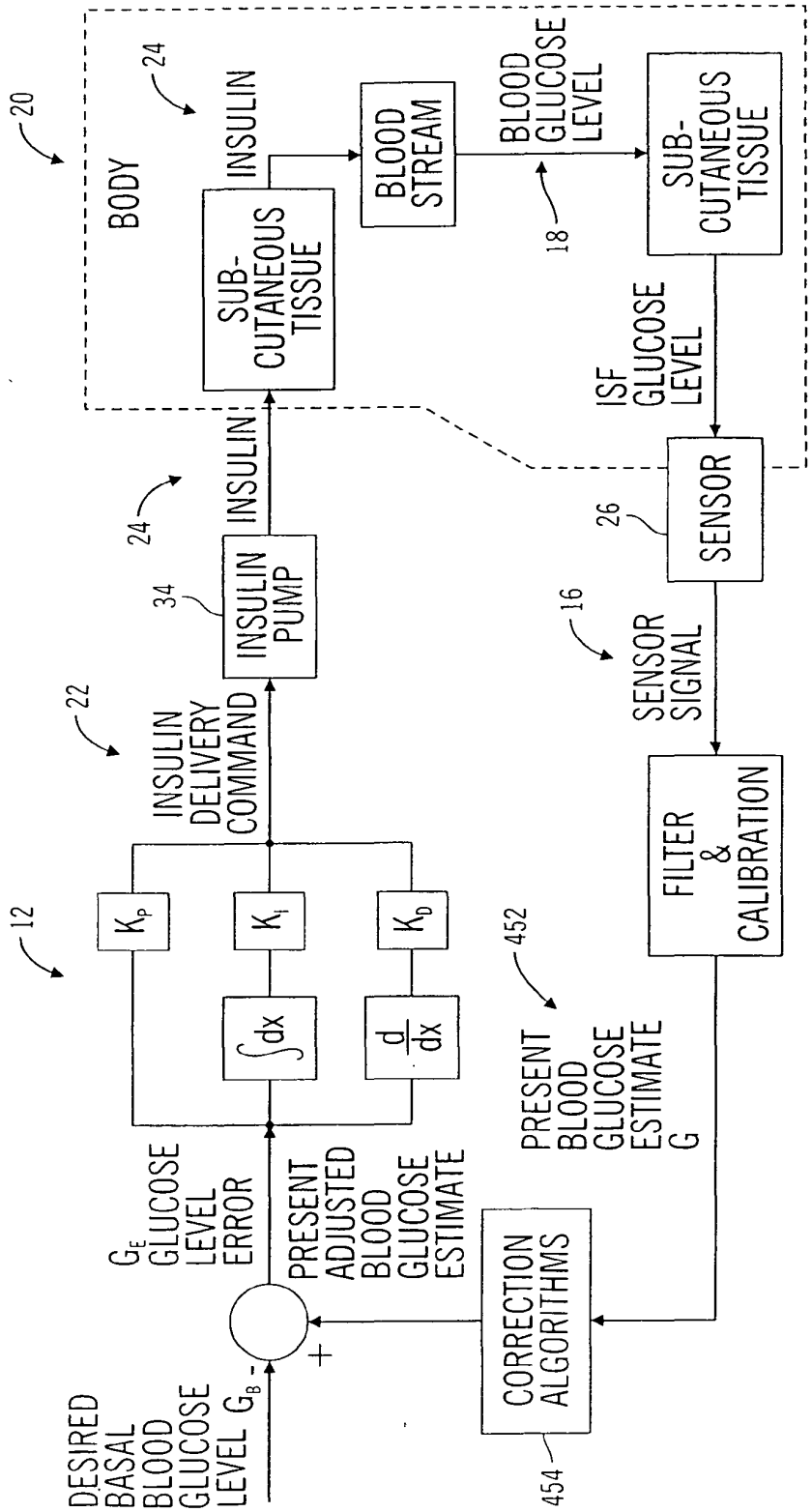
20
BODY
24
INSULIN
SUB-CUTANEOUS TISSUE
BLOOD STREAM
BLOOD GLUCOSE LEVEL
18
SUB-CUTANEOUS TISSUE
ISF GLUCOSE LEVEL
SENSOR
26
24
INSULIN
34
INSULIN PUMP
16
SENSOR SIGNAL
22
INSULIN DELIVERY COMMAND
FILTER & CALIBRATION
12
K_P
K_I
K_D
$\int dx$
$\frac{d}{dx}$
452
PRESENT BLOOD GLUCOSE ESTIMATE G
G_E GLUCOSE LEVEL ERROR
PRESENT ADJUSTED BLOOD GLUCOSE ESTIMATE
CORRECTION ALGORITHMS
454
DESIRED BASAL BLOOD GLUCOSE LEVEL G_B
+
-

FIG. 26

FIG. 27

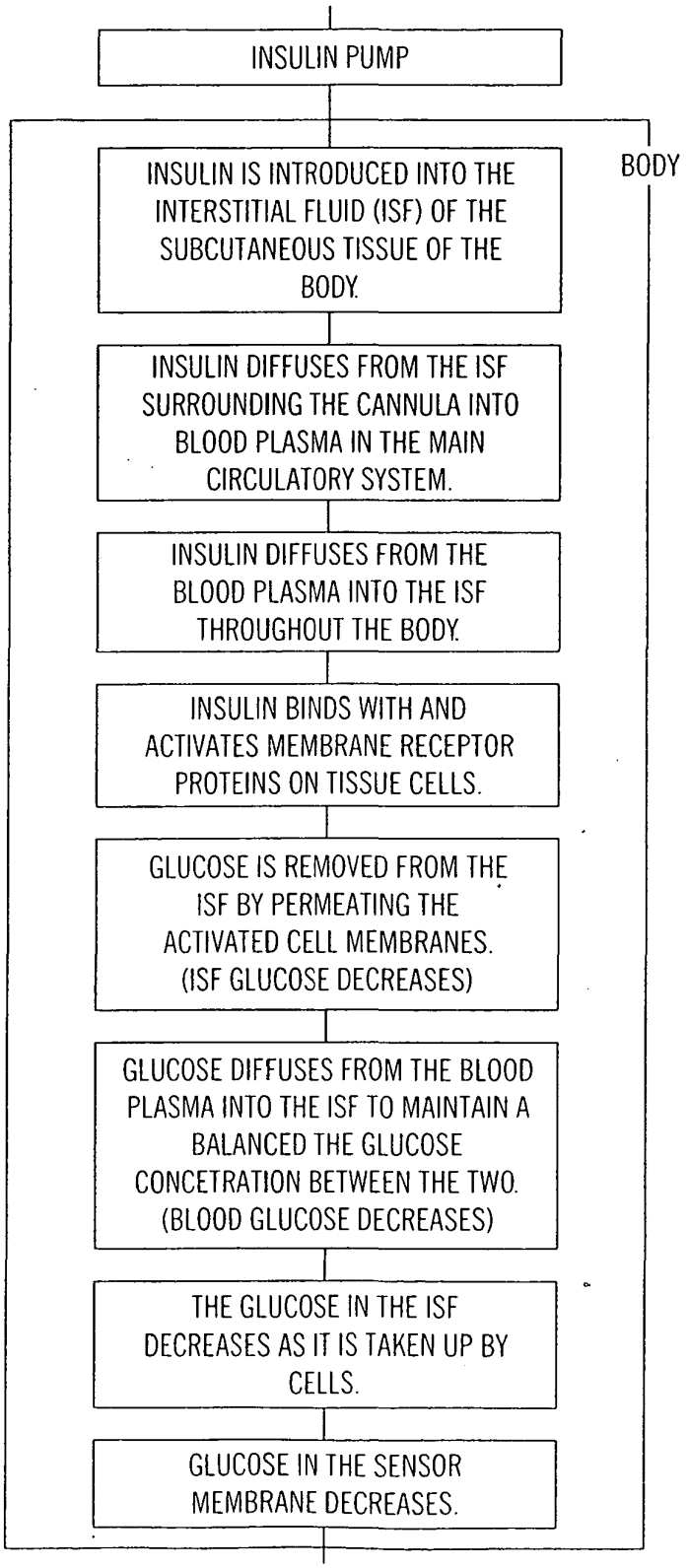
INSULIN PUMP
BODY
INSULIN IS INTRODUCED INTO THE INTERSTITIAL FLUID (ISF) OF THE SUBCUTANEOUS TISSUE OF THE BODY.
INSULIN DIFFUSES FROM THE ISF SURROUNDING THE CANNULA INTO BLOOD PLASMA IN THE MAIN CIRCULATORY SYSTEM.
INSULIN DIFFUSES FROM THE BLOOD PLASMA INTO THE ISF THROUGHOUT THE BODY.
INSULIN BINDS WITH AND ACTIVATES MEMBRANE RECEPTOR PROTEINS ON TISSUE CELLS.
GLUCOSE IS REMOVED FROM THE ISF BY PERMEATING THE ACTIVATED CELL MEMBRANES. (ISF GLUCOSE DECREASES)
GLUCOSE DIFFUSES FROM THE BLOOD PLASMA INTO THE ISF TO MAINTAIN A BALANCED THE GLUCOSE CONCETRATION BETWEEN THE TWO. (BLOOD GLUCOSE DECREASES)
THE GLUCOSE IN THE ISF DECREASES AS IT IS TAKEN UP BY CELLS.
GLUCOSE IN THE SENSOR MEMBRANE DECREASES.

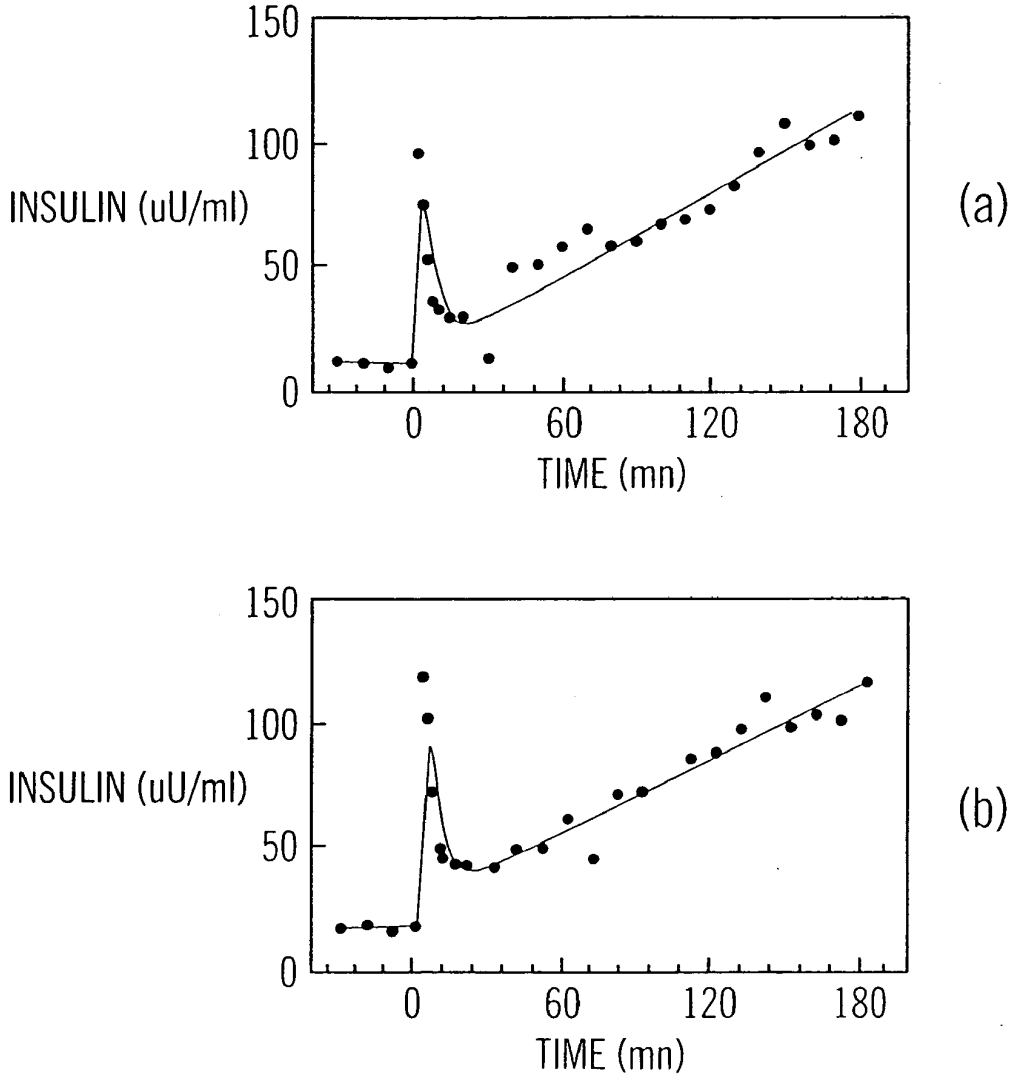
150
100
50
0
INSULIN (uU/ml)
0
60
120
180
TIME (mn)
(a)
150
100
50
0
INSULIN (uU/ml)
0
60
120
180
TIME (mn)
(b)

FIG. 28

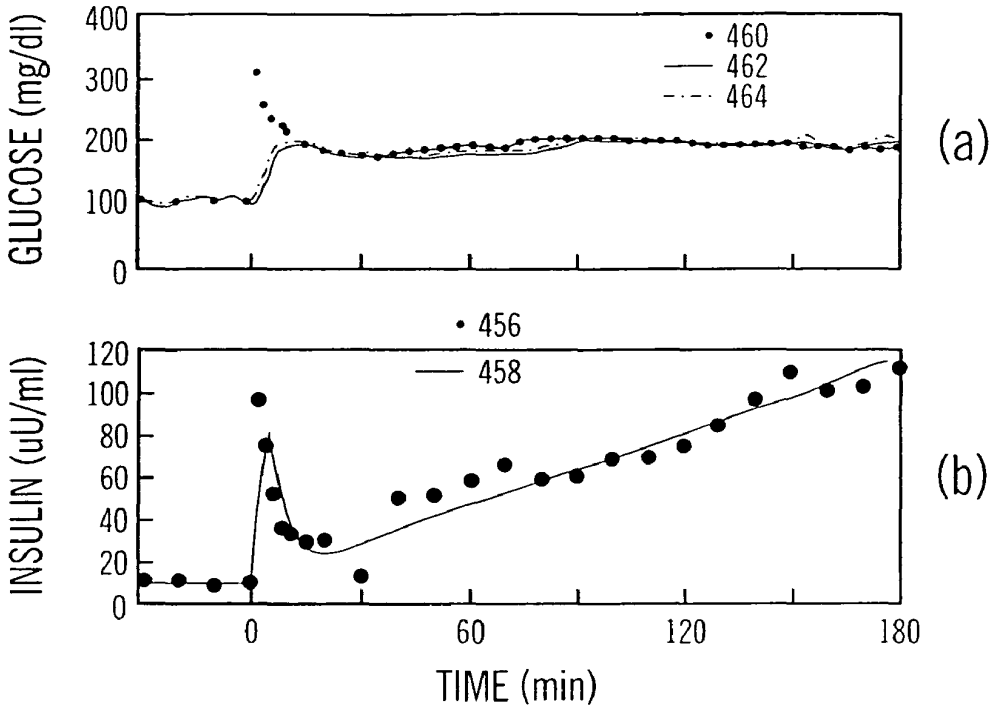
GLUCOSE (mg/dl)
400
300
200
100
0
460
462
464
(a)
INSULIN (uU/ml)
120
100
80
60
40
20
0
456
458
(b)
0
60
120
180
TIME (min)

FIG. 29

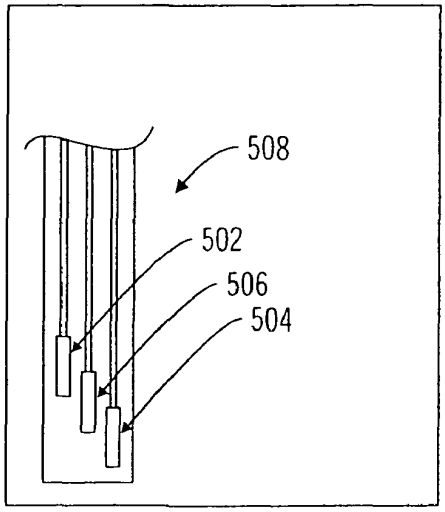
508
502
506
504

FIG. 30

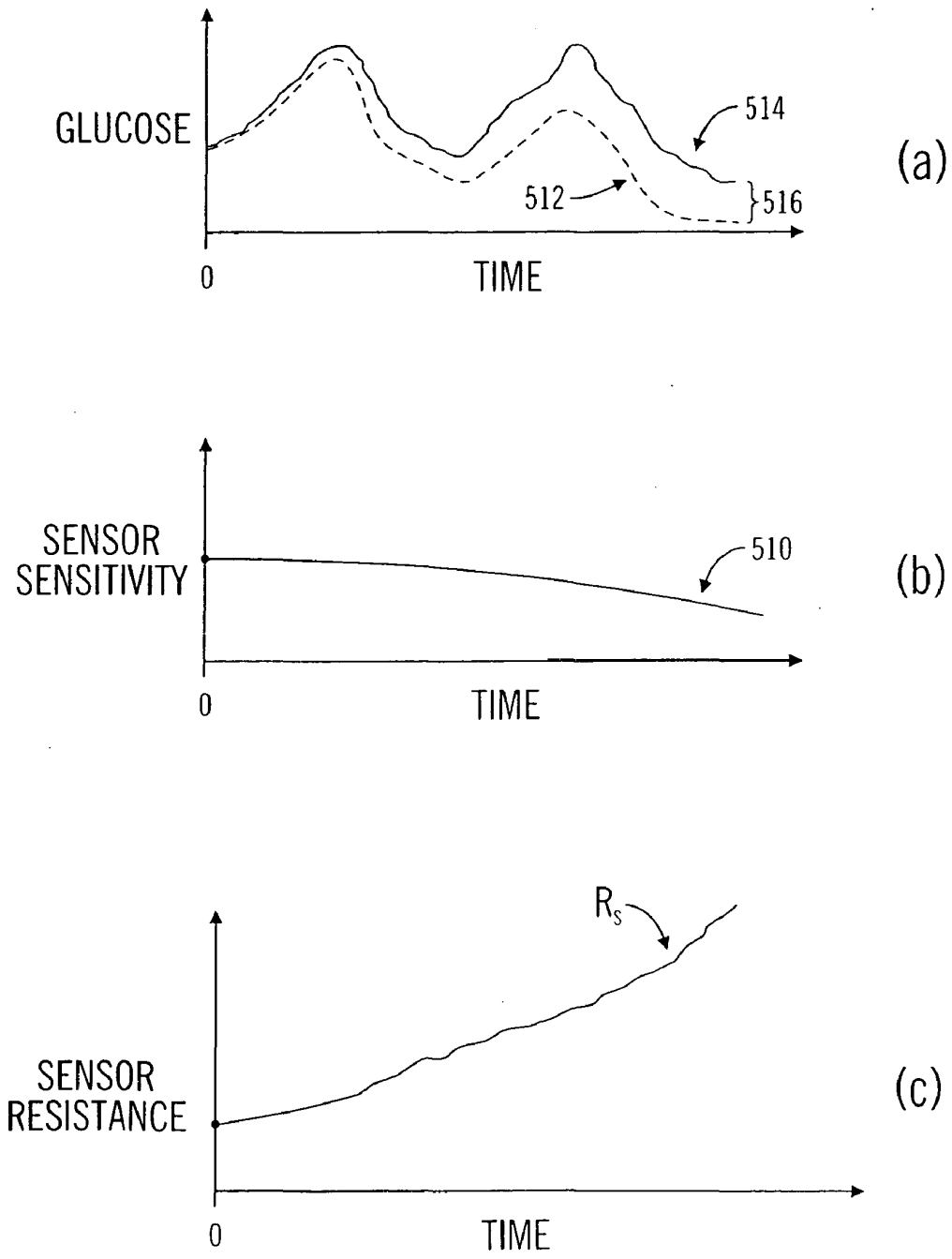
GLUCOSE
514
512
516
(a)
0
TIME
SENSOR
SENSITIVITY
510
(b)
0
TIME
R_S
SENSOR
RESISTANCE
(c)
0
TIME

FIG. 31

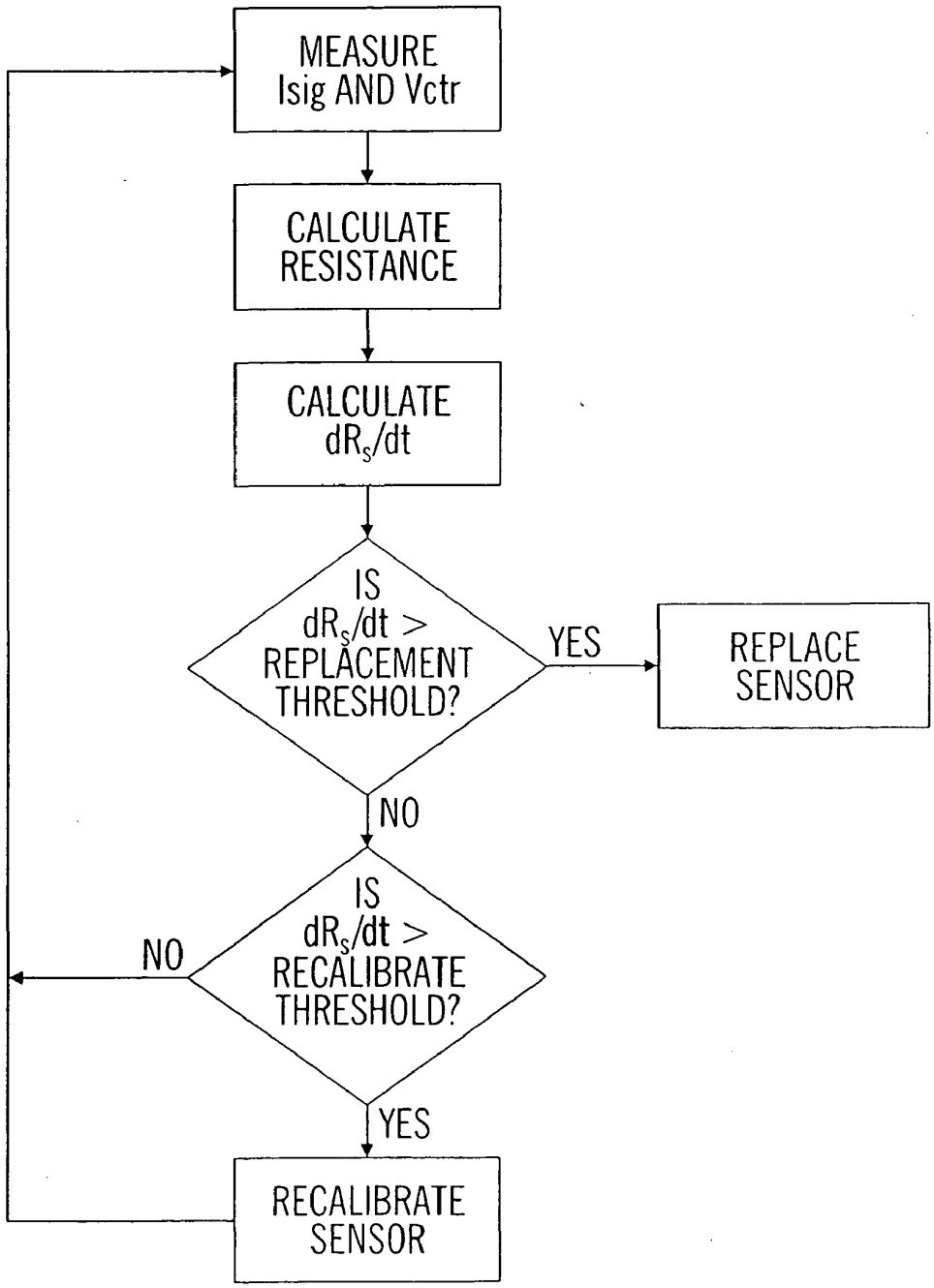
MEASURE
Isig AND Vctr
CALCULATE
RESISTANCE
CALCULATE
dR_s/dt
IS
dR_s/dt >
REPLACEMENT
THRESHOLD?
YES
REPLACE
SENSOR
NO
IS
dR_s/dt >
RECALIBRATE
THRESHOLD?
NO
YES
RECALIBRATE
SENSOR

FIG. 32

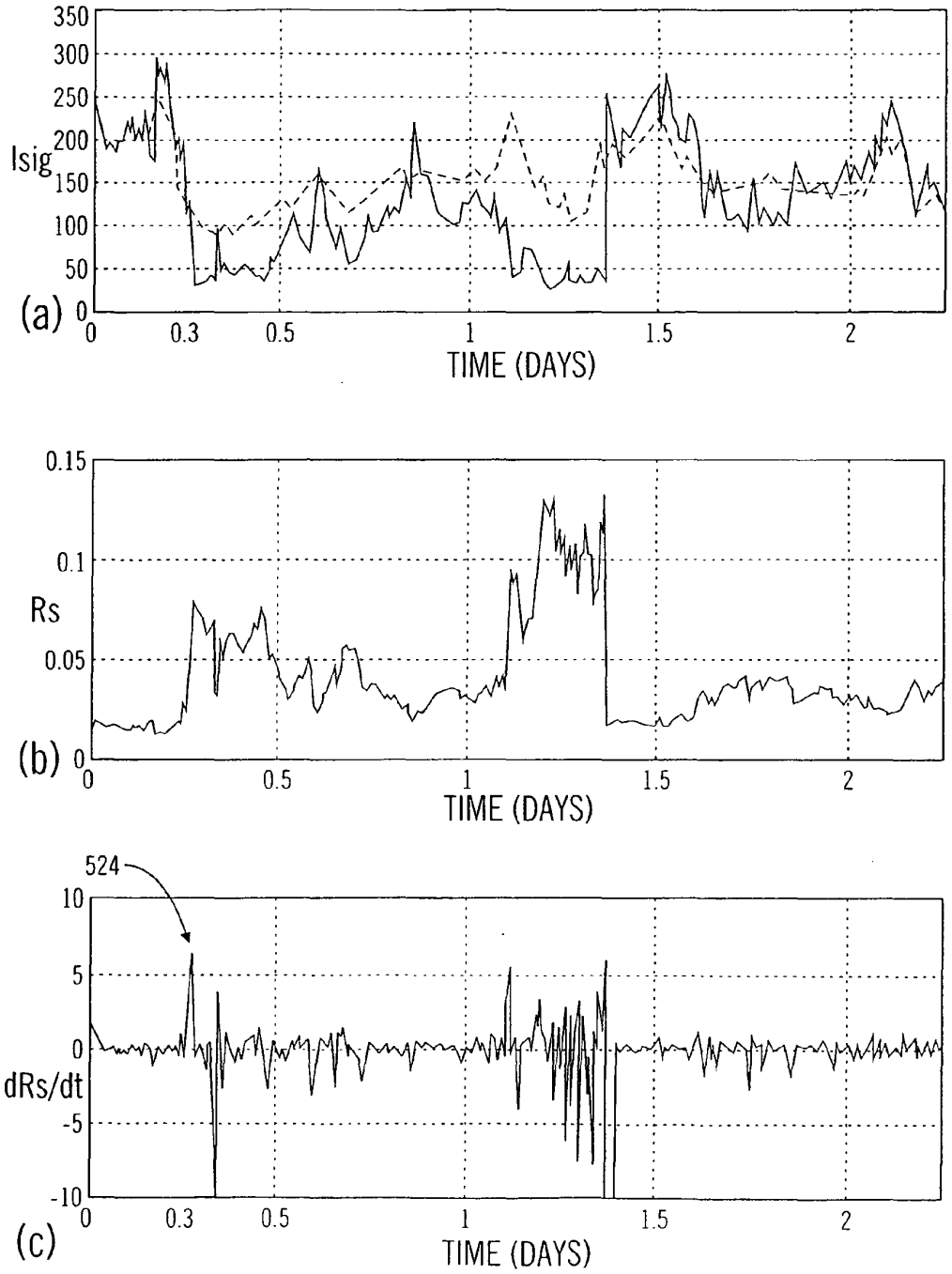
350
300
250
200
150
100
50
0
Isig
(a)
0
0.3
0.5
1
1.5
2
TIME (DAYS)
0.15
0.1
0.05
0
Rs
(b)
0
0.5
1
1.5
2
TIME (DAYS)
524
10
5
0
-5
-10
dRs/dt
(c)
0
0.3
0.5
1
1.5
2
TIME (DAYS)

FIG. 33

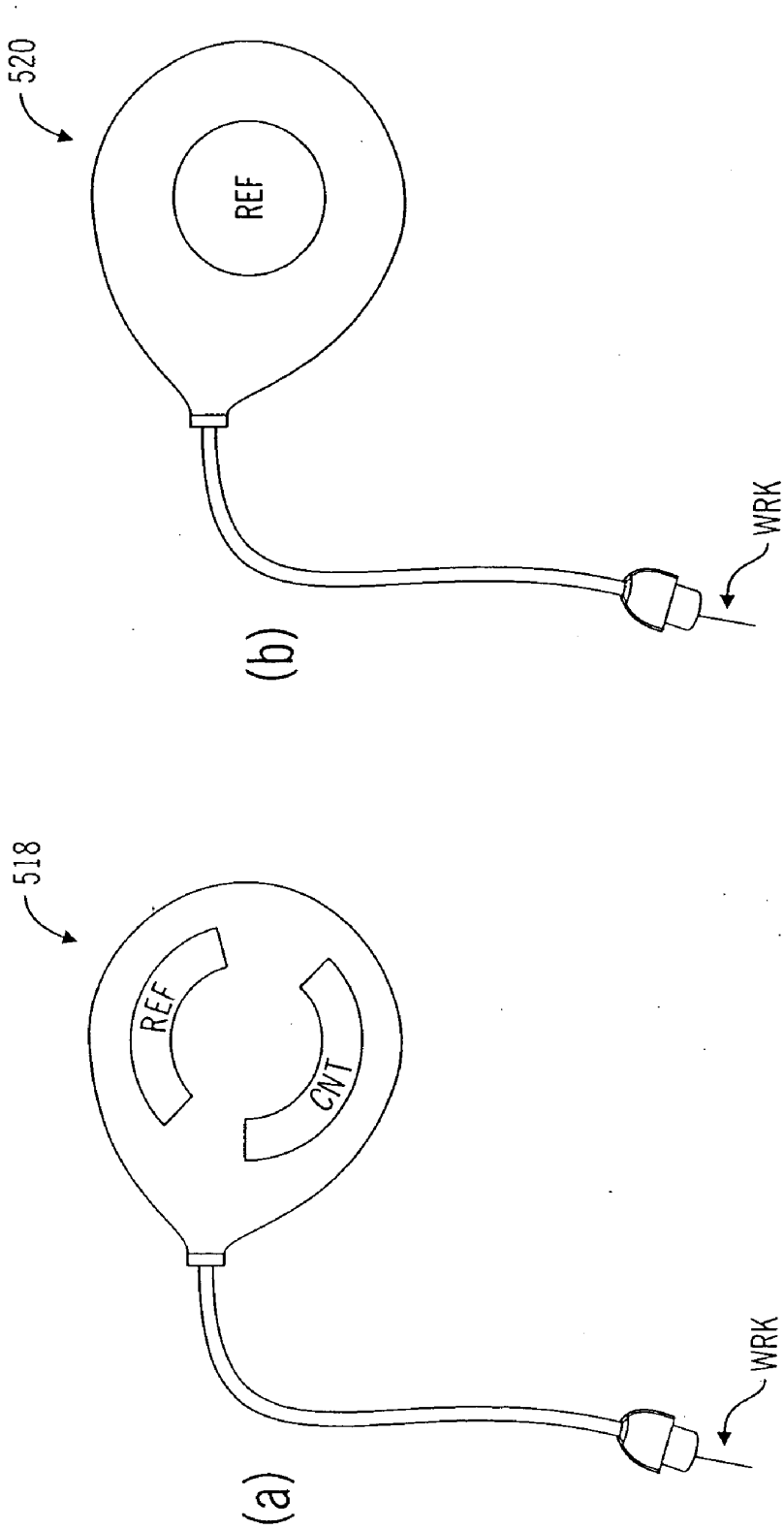

FIG. 34

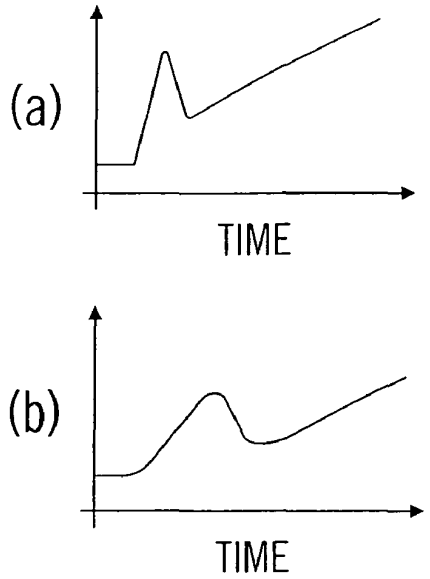

FIG. 35

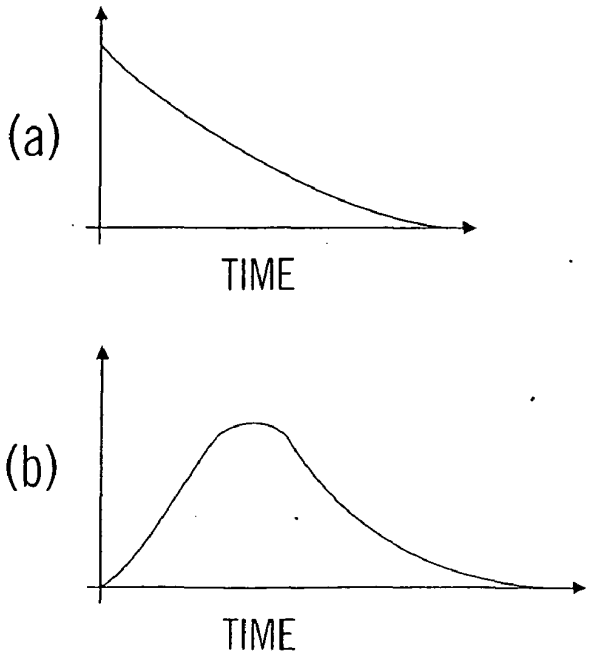

FIG. 36

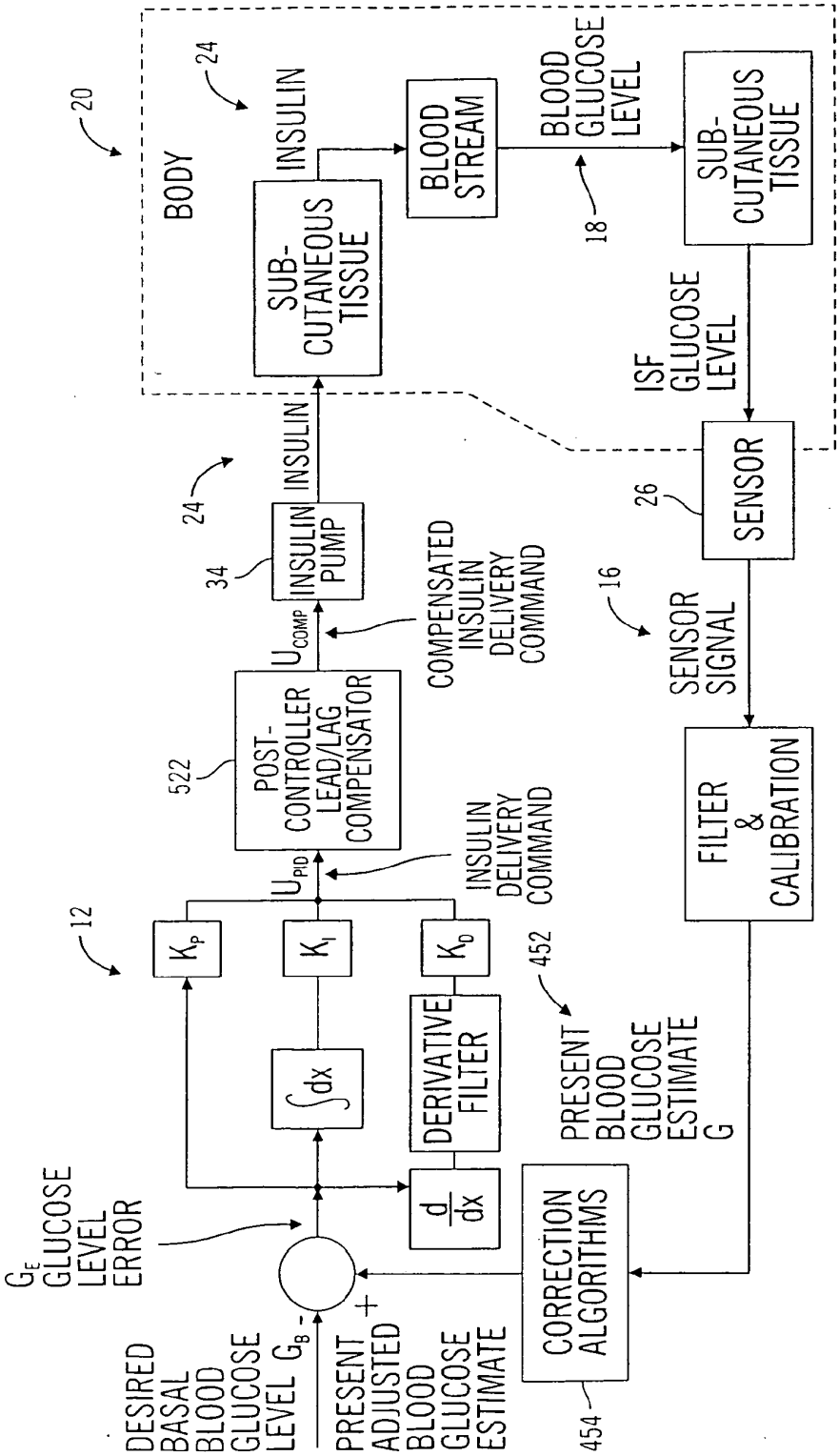
20
BODY
24
INSULIN
SUB-CUTANEOUS TISSUE
BLOOD STREAM
BLOOD GLUCOSE LEVEL
18
SUB-CUTANEOUS TISSUE
ISF GLUCOSE LEVEL
SENSOR
26
24
INSULIN
INSULIN PUMP
34
U_{COMP}
COMPENSATED INSULIN DELIVERY COMMAND
16
SENSOR SIGNAL
522
POST-CONTROLLER LEAD/LAG COMPENSATOR
U_{PID}
INSULIN DELIVERY COMMAND
FILTER & CALIBRATION
12
K_P
K_I
K_D
452
$\int dx$
DERIVATIVE FILTER
PRESENT BLOOD GLUCOSE ESTIMATE G
$\frac{d}{dx}$
G_E GLUCOSE LEVEL ERROR
CORRECTION ALGORITHMS
DESIRED BASAL BLOOD GLUCOSE LEVEL G_B -
PRESENT ADJUSTED BLOOD GLUCOSE ESTIMATE +
454

FIG. 37

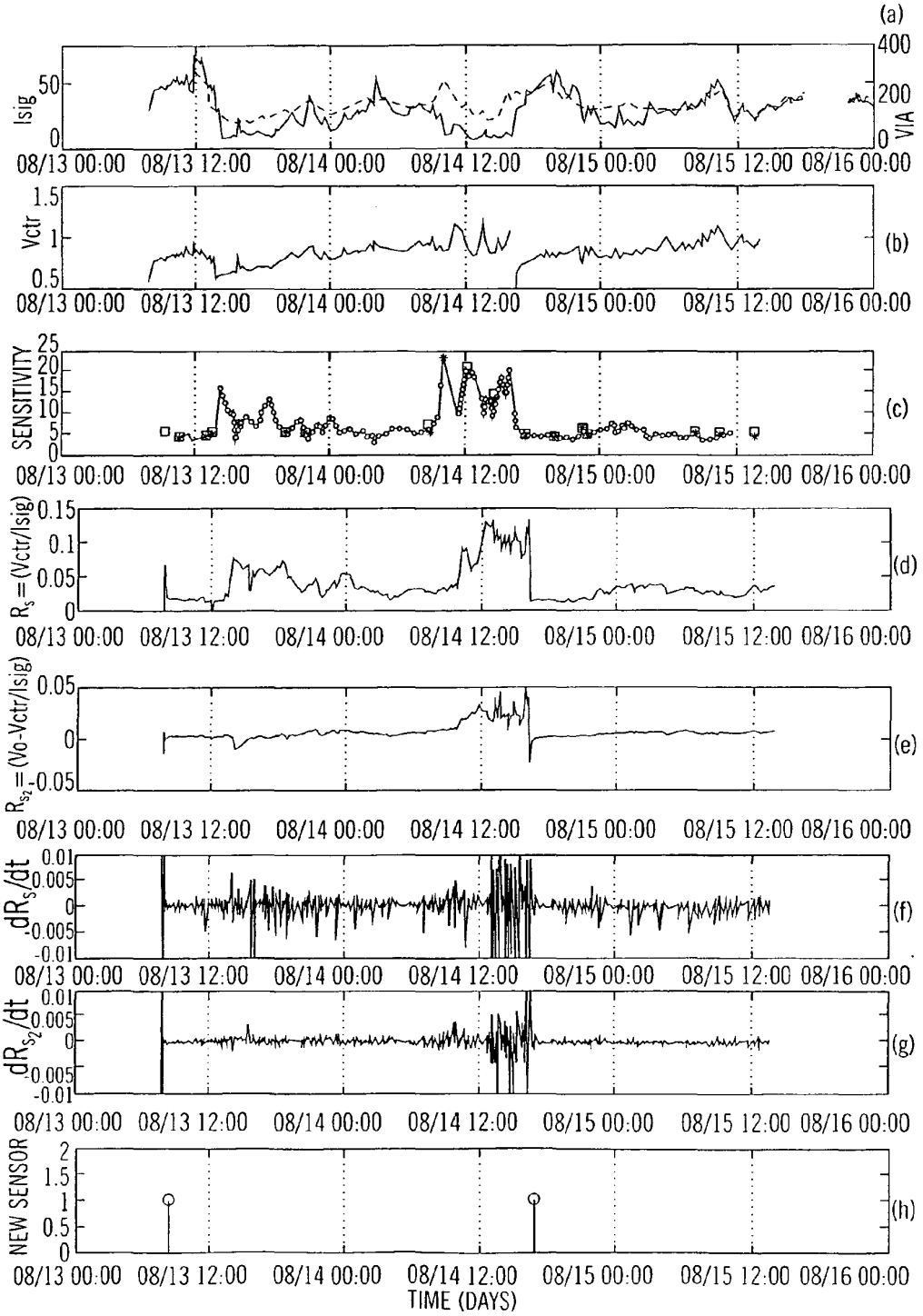
(a)
Isig
VIA
(b)
Vctr
(c)
SENSITIVITY
(d)
Rs=(Vctr/Isig)
(e)
Rs2=(Vo-Vctr/Isig)
(f)
dRs/dt
(g)
dRs2/dt
(h)
NEW SENSOR
08/13 00:00
08/13 12:00
08/14 00:00
08/14 12:00
08/15 00:00
08/15 12:00
08/16 00:00
TIME (DAYS)

FIG. 38

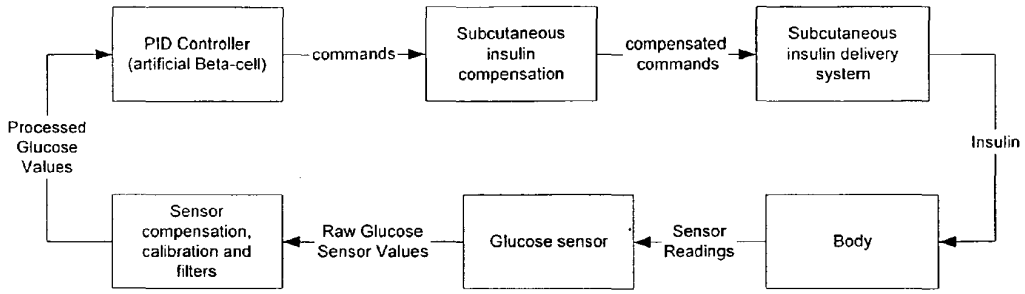

FIG. 39a

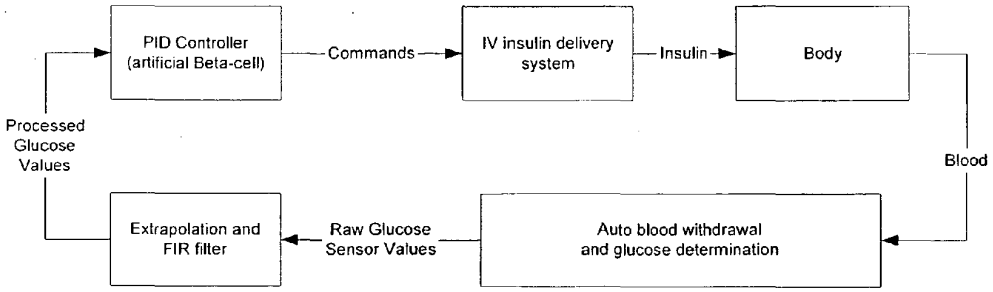

FIG. 39b

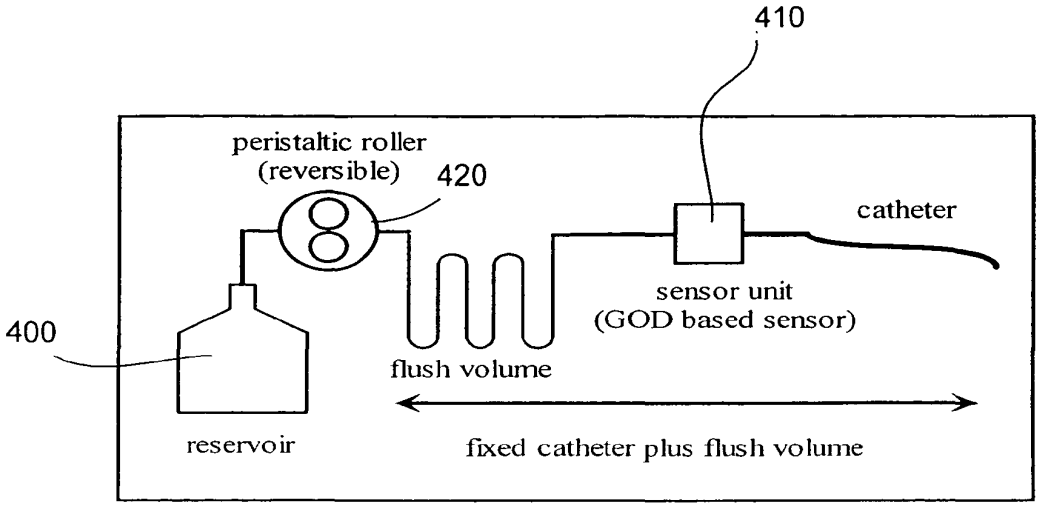
410
peristaltic roller
(reversible)
420
catheter
sensor unit
(GOD based sensor)
400
flush volume
reservoir
fixed catheter plus flush volume

FIG. 40

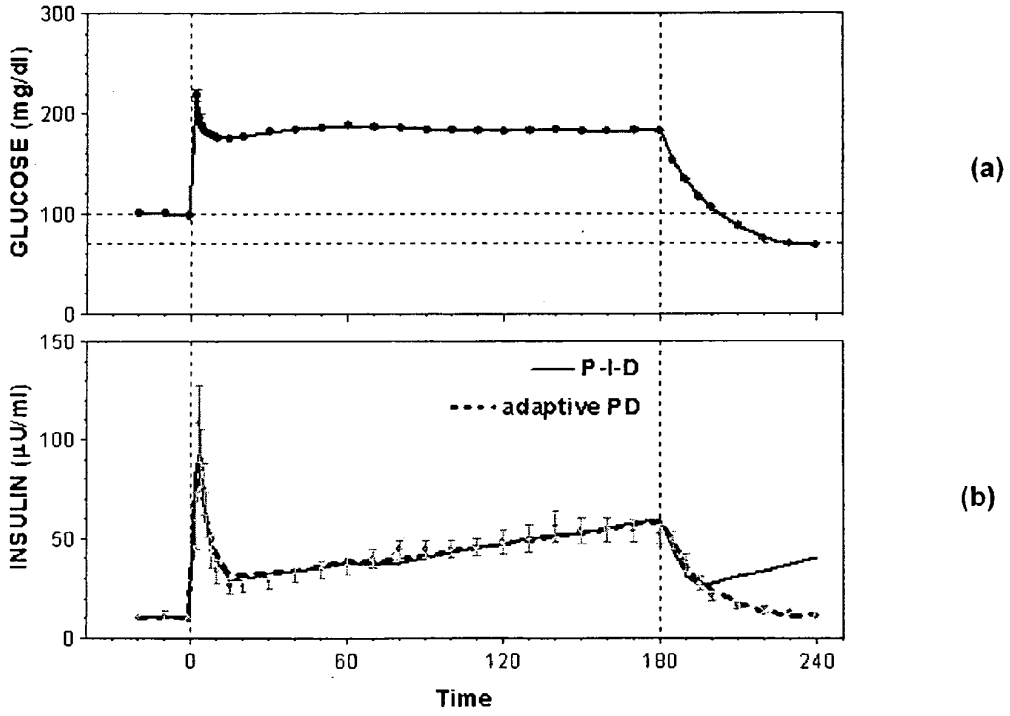
GLUCOSE (mg/dl)
300
200
100
0
(a)
INSULIN (µU/ml)
150
100
50
0
P-I-D
adaptive PD
(b)
0
60
120
180
240
Time

FIG. 41

CLOSED LOOP SYSTEM FOR CONTROLLING INSULIN INFUSION

RELATED APPLICATIONS

[0001] This application is continuation-in-part of U.S. application Ser. No. 09/586,175 filed Jun. 1, 2000, entitled "Closed Loop System For Controlling Insulin Infusion," which claims priority on U.S. Provisional Application Ser. No. 60/137,601 filed Jun. 3, 1999, entitled "Closed Loop Algorithms For Continuous Monitoring And Insulin Infusion," and U.S. Provisional Application Ser. No. 60/162,255 filed Oct. 29, 1999 and entitled "Closed Loop Algorithms For Continuous Monitoring And Insulin Infusion," all of which are specifically incorporated by reference herein.

FIELD OF THE INVENTION

[0002] This invention relates to closed loop drug delivery systems and more specifically to systems for controlling the infusion rate of insulin based on continuously monitored body glucose levels.

BACKGROUND OF THE INVENTION

[0003] The pancreas of a normal healthy person produces and releases insulin into the blood stream in response to elevated blood plasma glucose levels. Beta cells (β-cells), which reside in the pancreas, produce and secrete the insulin into the blood stream, as it is needed. If β-cells become incapacitated or die, a condition known as Type I diabetes mellitus (or in some cases if β-cells produce insufficient quantities of insulin, Type II diabetes), then insulin must be provided to the body from another source.

[0004] Traditionally, since insulin cannot be taken orally, insulin has been injected with a syringe. More recently, use of infusion pump therapy has been increasing, especially for delivering insulin for diabetics. For example, external infusion pumps are worn on a belt, in a pocket, or the like, and deliver insulin into the body via an infusion tube with a percutaneous needle or a cannula placed in the subcutaneous tissue. As of 1995, less than 5% of Type I diabetics in the United States were using infusion pump therapy. Presently over 7% of the more than 900,000 Type I diabetics in the U.S. are using infusion pump therapy. And the percentage of Type I diabetics that use an infusion pump is growing at an absolute rate of over 2% each year. Moreover, the number of Type I diabetics is growing at 3% or more per year. In addition, growing numbers of insulin using Type II diabetics are also using infusion pumps. Physicians have recognized that continuous infusion provides greater control of a diabetic's condition, and are also increasingly prescribing it for patients. Although offering control, pump therapy can suffer from several complications that make use of traditional external infusion pumps less desirable for the user.

SUMMARY OF THE DISCLOSURE

[0005] According to an embodiment of the invention, a closed loop infusion system and method for controlling blood glucose concentration in the body of a user is described. Embodiments of the present invention include obtaining a blood glucose level from the body of the user, generating commands by a proportional plus, integral plus, derivative (PID) controller from the obtained glucose level, and infusing a liquid into the body of the user in response to the commands. In particular embodiments, the PID controller is a bilinear PID controller.

[0006] According to another embodiment of the invention, a closed loop infusion system is for infusing a fluid into a user. The closed loop infusion system includes a sensor system, a controller, and a delivery system. The sensor system includes a sensor for monitoring a condition of the user. The sensor produces a sensor signal, which is representative of the condition of the user, and is used to generate a controller input. The controller uses the controller input to generate commands that affect the operation of the delivery system. Accordingly, the delivery system infuses a liquid into the user. In particular embodiments, glucose concentration is monitored by the sensor system, and the liquid delivered to the user includes insulin. In preferred embodiments, the sensor system sends a message, generated using the sensor signal, to the delivery system. The message is used to generate the controller input. In particular embodiments, the sensor is a subcutaneous sensor in contact with interstitial fluid. In further particular embodiments, two or more sensors are included in the sensor system. Still in further embodiments, the blood glucose concentration is obtained through an IV catheter or a vascular sensor. In addition, in particular embodiments the liquid is delivered to through an IV catheter connected to the body of the user.

[0007] In preferred embodiments, the sensor system is predominately external to the user's body. And the delivery system is predominately external to the user's body. In alternative embodiments, the sensor system is predominately internal to the user's body. In other alternative embodiments, the delivery system is predominately internal to the user's body.

[0008] In preferred embodiments, the controller uses a first set of one or more controller gains when the glucose concentration is higher than a desired basal glucose concentration and the controller uses a second set of one or more controller gains when the glucose concentration is lower than a desired basal glucose concentration. In alternative embodiments, the controller uses a first set of one or more controller gains when the glucose concentration is increasing and a second set of one or more controller gains when the glucose concentration is decreasing. In further alternative embodiments, the controller uses a first set of one or more controller gains when the glucose concentration is higher than a desired basal glucose concentration and the glucose concentration is increasing; and the controller uses a second set of one or more controller gains when the glucose concentration is higher than a desired basal glucose concentration and the glucose concentration is decreasing; and the controller uses a third set of one or more controller gains when the glucose concentration is lower than a desired basal glucose concentration and the glucose concentration is increasing; and the controller uses a fourth set of one or more controller gains when the glucose concentration is lower than a desired basal glucose concentration and the glucose concentration is decreasing.

[0009] In preferred embodiments, one or more controller gains are selected such that the commands generated by the controller cause the delivery system to infuse insulin into the body of the user in response to a glucose concentration at a rate similar to the rate that beta cells would release insulin in an individual with a healthy normally functioning pan-

creas. Alternatively, one or more controller gains are selected so that the commands generated by the controller cause the delivery system to infuse insulin into the body of the user in response to a glucose concentration at a rate such that the insulin concentration profile in the user's blood stream is similar to the insulin concentration profile that would be generated by the release of insulin beta cells in an individual with a healthy normally functioning pancreas. In other alternative embodiments, a post-controller lead/lag compensator is used to modify the commands generated by the controller to cause the delivery system to infuse insulin into the body of the user in response to a glucose concentration at a rate such that the insulin concentration profile in the user's blood stream is similar to the insulin concentration profile that would be generated by the release of insulin beta cells in an individual with a healthy normally functioning pancreas.

[0010] In preferred embodiments, one or more controller gains are selected by a method that includes the step of measuring an insulin response of at least one individual with a healthy normally functioning pancreas and calculating the controller gains that cause the commands to generally match the insulin response of at least one individual. In particular embodiments, the derivative gain K_D is calculated using the first phase insulin response ($\phi 1$) measured from a normal glucose tolerant (NGT) individual. In further particular embodiments, one or more controller gains are calculated from a ratio of one or more controller gains.

[0011] In preferred embodiments, one or more controller gains includes at least one tuning parameter. In particular embodiments, the tuning parameter is a post-controller lead/lag compensator is used to modify the commands generated by the controller to compensate for an insulin delivery delay due to infusing insulin into a user' tissue rather than directly into the user's blood stream. In additional embodiments, the tuning parameter is an integrator clip. Still further embodiments, the tuning parameter is a feedback of predicted plasma insulin. Yet further embodiments, the tuning parameter is an integrator leak.

[0012] In alternative embodiments, the controller is influenced by inputs of more than one measured body characteristic. For example, measured body characteristics that might be used to influence the controller include one or more amino acid concentrations, one or more gastrointestinal hormone concentrations, one or more other hormone concentrations, blood pH, interstitial fluid (ISF) pH, one or more blood glucose concentrations, and one or more interstitial fluid (ISF) glucose concentrations. In particular embodiments, the sensor is a multi-sensor that measures both glucose concentration and pH.

[0013] In preferred embodiments, the sensor system produces a diagnostic signal in addition to the sensor signal, and the diagnostic signal is used to indicate when the sensor signal accuracy has diminished.

[0014] Other features and advantages of the invention will become apparent from the following detailed description, taken in conjunction with the accompanying drawings which illustrate, by way of example, various features of embodiments of the invention.

BRIEF DESCRIPTION OF THE DRAWINGS

[0015] A detailed description of embodiments of the invention will be made with reference to the accompanying drawings, wherein like numerals designate corresponding parts in the several figures.

[0016] **FIG. 1** is a block diagram of a closed loop glucose control system in accordance with an embodiment of the present invention.

[0017] **FIG. 2** is a front view of closed loop hardware located on a body in accordance with an embodiment of the present invention.

[0018] **FIG. 3** (*a*) is a perspective view of a glucose sensor system for use in an embodiment of the present invention.

[0019] **FIG. 3** (*b*) is a side cross-sectional view of the glucose sensor system of **FIG. 3** (*a*).

[0020] **FIG. 3** (*c*) is a perspective view of a sensor set of the glucose sensor system of **FIG. 3** (*a*) for use in an embodiment of the present invention.

[0021] **FIG. 3** (*d*) is a side cross-sectional view of the sensor set of **FIG. 3** (*c*).

[0022] **FIG. 4** is a cross sectional view of a sensing end of the sensor of **FIG. 3** (*d*).

[0023] **FIG. 5** is a top view of an infusion device with a reservoir door in the open position, for use in an embodiment of the present invention.

[0024] **FIG. 6** is a side view of an infusion set with the insertion needle pulled out, for use in an embodiment of the present invention.

[0025] **FIG. 7** is a circuit diagram of a sensor and its power supply in accordance with an embodiment of the present invention.

[0026] **FIG. 8** (*a*) is a diagram of a single device and its components in accordance with an embodiment of the present invention.

[0027] **FIG. 8** (*b*) is a diagram of two devices and their components in accordance with an embodiment of the present invention.

[0028] **FIG. 8** (*c*) is another diagram of two devices and their components in accordance with an embodiment of the present invention.

[0029] **FIG. 8** (*d*) is a diagram of three devices and their components in accordance with an embodiment of the present invention.

[0030] **FIG. 9** is a table listing the devices of FIGS. **8** (*a-d*) and their components.

[0031] **FIG. 10** is a block diagram of the glucose sensor system of **FIG. 3** (*a*).

[0032] **FIG. 11** (*a*) is a detailed block diagram of an A/D converter for the glucose sensor system of **FIG. 10** in accordance with an embodiment of the present invention.

[0033] **FIG. 11** (*b*) is a detailed block diagram of the A/D converter for the glucose sensor system of **FIG. 10** with a pulse duration output selection option in accordance with an embodiment of the present invention.

[0034] **FIG. 12** is a circuit diagram of an I-F A/D converter of **FIG. 10** accompanied by charts of node signals in accordance with an embodiment of the present invention.

[0035] **FIG. 13** is another circuit diagram of an I-F A/D converter of **FIG. 10** accompanied by charts of node signals in accordance with an embodiment of the present invention.

[0036] **FIG. 14** is still another circuit diagram of an I-F A/D converter of **FIG. 10** accompanied by charts of node signals in accordance with an embodiment of the present invention.

[0037] **FIG. 15** is a circuit diagram of an I-V A/D converter of **FIG. 10** in accordance with an embodiment of the present invention.

[0038] **FIG. 16** is a block diagram of the glucose sensor system of **FIG. 10** with a pre-filter and a filter in accordance with an embodiment of the present invention.

[0039] **FIG. 17** is a chart of an example of a pre-filter of **FIG. 16** and its effects on digital sensor values Dsig in accordance with an embodiment of the present invention.

[0040] **FIG. 18** is frequency response chart for a filter of **FIG. 16** in accordance with an embodiment of the present invention.

[0041] **FIG. 19** (*a*) is a plot of a filtered and an unfiltered sensor signal over time in accordance with an embodiment of the present invention.

[0042] **FIG. 19** (*b*) is close up of a section of the plot of **FIG. 19** (*a*) in accordance with an embodiment of the present invention.

[0043] **FIG. 20** is a cross-sectional view of a sensor set and an infusion set attached to the body in accordance with an embodiment of the present invention.

[0044] **FIG. 21** is a frequency response chart of a time delay correcting Weiner filter in accordance with an embodiment of the present invention.

[0045] **FIG. 22** is a plot of a digital sensor values Dsig before and after time delay correction compared to actual glucose measurements over time in accordance with an embodiment of the present invention.

[0046] **FIG. 23** (*a*) is a diagram of a glucose clamp (glucose level with respect to time).

[0047] **FIG. 23** (*b*) is a plot of insulin concentration in a normal glucose tolerant (NGT) individual in response to various magnitudes of glucose clamps of **FIG. 23** (*a*).

[0048] **FIG. 24** (*a*) is a diagram of a glucose clamp.

[0049] **FIG. 24** (*b*) is a diagram of a proportional insulin response to the glucose clamp of **FIG. 24** (*a*) in accordance with an embodiment of the present invention.

[0050] **FIG. 24** (*b*) is a diagram of a proportional insulin response to the glucose clamp of **FIG. 24** (*a*) in accordance with an embodiment of the present invention.

[0051] **FIG. 24** (*c*) is a diagram of an integral insulin response to the glucose clamp of **FIG. 24** (*a*) in accordance with an embodiment of the present invention.

[0052] **FIG. 24** (*d*) is a diagram of a derivative insulin response to the glucose clamp of **FIG. 24** (*a*) in accordance with an embodiment of the present invention.

[0053] **FIG. 24** (*e*) is a diagram of a combined proportional, integral, and derivative insulin response to the glucose clamp of **FIG. 24** (*a*) in accordance with an embodiment of the present invention.

[0054] **FIG. 25** (*a*) is a plot of insulin responses to a glucose clamp for exercise trained and normal individuals.

[0055] **FIG. 25** (*b*) is a bar chart of glucose uptake rates for exercise trained and normal individuals.

[0056] **FIG. 26** is a block diagram of a closed loop system to control blood glucose levels through insulin infusion based on glucose level feedback in accordance with an embodiment of the present invention.

[0057] **FIG. 27** is a detailed block diagram of the portion of the control loop of **FIG. 26** that is in the body in accordance with an embodiment of the present invention.

[0058] FIGS. **28** (*a* and *b*) are plots of measured insulin responses of two different normal glucose tolerant (NGT) individuals to a glucose clamp for use with an embodiment of the present invention.

[0059] **FIG. 29** (*a*) is a plot of two different glucose sensor outputs compared to glucose meter readings during a glucose clamp in accordance with an embodiment of the present invention.

[0060] **FIG. 29** (*b*) is a plot of actual insulin concentration in blood compared to a controller commanded insulin concentration in response to the glucose clamp of **FIG. 29** (*a*) in accordance with an embodiment of the present invention.

[0061] **FIG. 30** is a top view of an end of a multi-sensor for measuring both glucose concentration and pH in accordance with an embodiment of the present invention.

[0062] **FIG. 31** (*a*) is a representative drawing of blood glucose compared to sensor measured blood glucose over time in accordance with an embodiment of the present invention.

[0063] **FIG. 31** (*b*) is a representative drawing of sensor sensitivity over the same period of time as **FIG. 31** (*a*) in accordance with an embodiment of the present invention.

[0064] **FIG. 31** (*c*) is a representative drawing of sensor resistance over the same period of time as **FIG. 31** (*a*) in accordance with an embodiment of the present invention.

[0065] **FIG. 32** is a block diagram using the derivative of sensor resistance to determine when to recalibrate or replace the sensor in accordance with an embodiment of the present invention.

[0066] **FIG. 33** (*a*) is a plot of an analog sensor signal Isig over time in accordance with an embodiment of the present invention.

[0067] **FIG. 33** (*b*) is a plot of sensor resistance over the same period of time as **FIG. 32** (*a*) in accordance with an embodiment of the present invention.

[0068] **FIG. 33** (*c*) is a plot of the derivative of the sensor resistance of **FIG. 32** (*b*) in accordance with an embodiment of the present invention.

[0069] **FIG. 34** (*a*) is a bottom view of a telemetered characteristic monitor in accordance with an embodiment of the present invention.

[0070] **FIG. 34** (*b*) is a bottom view of a different telemetered characteristic monitor in accordance with an embodiment of the present invention.

[0071] **FIG. 35** (*a*) is a drawing of a blood plasma insulin response to a glucose clamp in a normal glucose tolerant (NGT) individual in accordance with an embodiment of the present invention.

[0072] **FIG. 35** (*b*) is a drawing of the blood plasma insulin response of **FIG. 35** (*a*) when delayed due to insulin being delivered to the subcutaneous tissue instead of directly into the blood stream in accordance with an embodiment of the present invention.

[0073] **FIG. 36** (*a*) is a drawing of blood plasma insulin concentration over time after an insulin bolus is delivered directly into the blood stream in accordance with an embodiment of the present invention.

[0074] **FIG. 36** (*b*) is a drawing of a blood plasma insulin concentration over time after an insulin bolus is delivered into the subcutaneous tissue in accordance with an embodiment of the present invention.

[0075] **FIG. 37** is a block diagram of the closed loop system of **FIG. 26** with the addition of a post-controller compensator and a derivative filter in accordance with an embodiment of the present invention.

[0076] **FIG. 38** (*a*) is a plot of sensor signal measurements and Via measurements with respect to time in accordance with an embodiment of the present invention.

[0077] **FIG. 38** (*b*) is a plot of a measured counter electrode voltage Vcnt with respect to time in accordance with an embodiment of the present invention.

[0078] **FIG. 38** (*c*) is a plot of calculated sensor sensitivity with respect to time in accordance with an embodiment of the present invention.

[0079] **FIG. 38** (*d*) is a plot of a calculation of sensor resistance Rs_1 with respect to time in accordance with an embodiment of the present invention.

[0080] **FIG. 38** (*e*) is a plot of another calculation of sensor resistance Rs_2 with respect to time in accordance with an embodiment of the present invention.

[0081] **FIG. 38** (*f*) is a plot of the derivative of sensor resistance Rs_1 of **FIG. 38** (*d*) with respect to time in accordance with an embodiment of the present invention.

[0082] **FIG. 38** (*g*) is a plot of the derivative of the sensor resistance Rs_2 of **FIG. 38** (*e*) with respect to time in accordance with an embodiment of the present invention.

[0083] **FIG. 38** (*h*) is a plot of when sensors were replaced with respect to time in accordance with an embodiment of the present invention.

[0084] FIGS. **39** (*a*) and (*b*) are a block diagrams of a closed loop glucose control system in accordance with embodiments of the present invention.

[0085] **FIG. 40** is a block diagram of auto blood withdrawal and return in accordance with an embodiment of the present invention.

[0086] **FIG. 41**(*a*) is a plot actual blood glucose concentration in accordance with an embodiment of the present invention.

[0087] **FIG. 41**(*b*) is a plot of actual insulin concentration in blood compared to a controller commanded insulin concentration in response to the blood glucose in **FIG. 41**(*a*) in accordance with an embodiment of the present invention.

DETAILED DESCRIPTION OF THE PREFERRED EMBODIMENTS

[0088] As shown in the drawings for purposes of illustration, the invention is embodied in a closed loop infusion system for regulating the rate of fluid infusion into a body of a user based on feedback from an analyte concentration measurement taken from the body. In particular embodiments, the invention is embodied in a control system for regulating the rate of insulin infusion into the body of a user based on a glucose concentration measurement taken from the body. In preferred embodiments, the system is designed to model a pancreatic beta cell (β-cell). In other words, the system controls an infusion device to release insulin into a body of a user in a similar concentration profile as would be created by fully functioning human β-cells when responding to changes in blood glucose concentrations in the body.

[0089] Thus, the system simulates the body's natural insulin response to blood glucose levels and not only makes efficient use of insulin, but also accounts for other bodily functions as well since insulin has both metabolic and mitogenic effects. However, the algorithms must model the β-cells closely, since algorithms that are designed to minimize glucose excursions in the body, without regard for how much insulin is delivered, may cause excessive weight gain, hypertension, and atherosclerosis. In preferred embodiments of the present invention, the system is intended to emulate the in vivo insulin secretion pattern and to adjust this pattern consistent with the in vivo β-cell adaptation experienced by normal healthy individuals. The in vivo β-cell response in subjects with normal glucose tolerance (NGT), with widely varying insulin sensitivity (S_I), is the optimal insulin response for the maintenance of glucose homeostasis.

[0090] Preferred embodiments include a glucose sensor system **10**, a controller **12** and an insulin delivery system **14**, as shown in **FIG. 1**. The glucose sensor system **10** generates a sensor signal **16** representative of blood glucose levels **18** in the body **20**, and provides the sensor signal **16** to the controller **12**. The controller **12** receives the sensor signal **16** and generates commands **22** that are communicated to the insulin delivery system **14**. The insulin delivery system **14** receives the commands **22** and infuses insulin **24** into the body **20** in response to the commands **22**.

[0091] Generally, the glucose sensor system **10** includes a glucose sensor, sensor electrical components to provide power to the sensor and generate the sensor signal **16**, a sensor communication system to carry the sensor signal **16** to the controller **12**, and a sensor system housing for the electrical components and the sensor communication system.

[0092] Typically, the controller **12** includes controller electrical components and software to generate commands for the insulin delivery system **14** based on the sensor signal **16**, and a controller communication system to receive the sensor signal **16** and carry commands to the insulin delivery system **14**.

[0093] Generally, the insulin delivery system **14** includes an infusion device and an infusion tube to infuse insulin **24** into the body **20**. In particular embodiments, the infusion device includes infusion electrical components to activate an infusion motor according to the commands **22**, an infusion communication system to receive the commands **22** from the controller **12**, and an infusion device housing to hold the infusion device.

[0094] In preferred embodiments, the controller **12** is housed in the infusion device housing and the infusion communication system is an electrical trace or a wire that carries the commands **22** from the controller **12** to the infusion device. In alternative embodiments, the controller **12** is housed in the sensor system housing and the sensor communication system is an electrical trace or a wire that carries the sensor signal **16** from the sensor electrical components to the controller electrical components. In other alternative embodiments, the controller **12** has its own housing or is included in a supplemental device. In another alternative embodiment, the controller is located with the infusion device and the sensor system all within one housing. In further alternative embodiments, the sensor, controller, and/or infusion communication systems may utilize a cable, a wire, fiber optic lines, RF, IR, or ultrasonic transmitters and receivers, or the like instead of the electrical traces.

System Overview

[0095] Preferred embodiments of the invention include a sensor **26**, a sensor set **28**, a telemetered characteristic monitor **30**, a sensor cable **32**, an infusion device **34**, an infusion tube **36**, and an infusion set **38**, all worn on the body **20** of a user, as shown in **FIG. 2**. The telemetered characteristic monitor **30** includes a monitor housing **31** that supports a printed circuit board **33**, batteries **35**, antenna (not shown), and a sensor cable connector (not shown), as seen in FIGS. **3** (*a*) and **3** (*b*). A sensing end **40** of the sensor **26** has exposed electrodes **42** and is inserted through skin **46** into a subcutaneous tissue **44** of a user's body **20**, as shown in FIGS. **3** (*d*) and **4**. The electrodes **42** are in contact with interstitial fluid (ISF) that is present throughout the subcutaneous tissue **44**. The sensor **26** is held in place by the sensor set **28**, which is adhesively secured to the user's skin **46**, as shown in FIGS. **3** (*c*) and **3** (*d*). The sensor set **28** provides for a connector end **27** of the sensor **26** to connect to a first end **29** of the sensor cable **32**. A second end **37** of the sensor cable **32** connects to the monitor housing **31**. The batteries **35** included in the monitor housing **31** provide power for the sensor **26** and electrical components **39** on the printed circuit board **33**. The electrical components **39** sample the sensor signal **16** and store digital sensor values (Dsig) in a memory and then periodically transmit the digital sensor values Dsig from the memory to the controller **12**, which is included in the infusion device.

[0096] The controller **12** processes the digital sensor values Dsig and generates commands **22** for the infusion device **34**. Preferably, the infusion device **34** responds to the commands **22** and actuates a plunger **48** that forces insulin **24** out of a reservoir **50** located inside the infusion device **34**, as shown in **FIG. 5**. In particular embodiments, a connector tip **54** of the reservoir **50** extends through the infusion device housing **52** and a first end **51** of the infusion tube **36** is attached to the connector tip **54**. A second end **53** of the infusion tube **36** connects to the infusion set **38**. Insulin **24** is forced through the infusion tube **36** into the infusion set **38** and into the body **16**. The infusion set **38** is adhesively attached to the user's skin **46**, as shown in **FIG. 6**. As part of the infusion set **38**, a cannula **56** extends through the skin **46** and terminates in the subcutaneous tissue **44** completing fluid communication between the reservoir **50** and the subcutaneous tissue **44** of the user's body **16**.

[0097] In alternative embodiments, the closed-loop system can be a part of a hospital-based glucose management system. Given that insulin therapy during intensive care has been shown to dramatically improve wound healing, reduce blood stream infections, renal failure, and polyneuropathy mortality, irrespective of whether subjects previously had diabetes (See Van den Berghe G. et al. NEJM 345: 1359-67, 2001, which is incorporated by reference herein), the present invention can be used in this hospital setting to control the blood glucose level of a patient in intensive care. In these alternative embodiments, since an IV hookup is typically implanted into a patient's arm while the patient is in an intensive care setting (e.g. ICU), a closed loop glucose control can be established which piggy-backs off the existing IV connection. Thus, in a hospital based system, intravenous (IV) catheters which are directly connected to a patient vascular system for purposes of quickly delivering IV fluids, can also be used to facilitate blood sampling and direct infusion of substances (e.g. insulin, anticoagulants) into the intra-vascular space. Moreover, glucose sensors may be inserted through the IV line to give real-time glucose levels from the blood stream. Therefore, depending on the type of hospital based system, the alternative embodiments would not necessarily need the described system components such as the sensor **26**, the sensor set **28**, the telemetered characteristic monitor **30**, the sensor cable **32**, the infusion tube **36**, and the infusion set **38** as described in the preferred embodiments. Instead, standard blood glucose meters or vascular glucose sensors as described in co-pending provisional application entitled "Multi-lumen Catheter," filed Sep. 27, 2002, Ser. No. 60/414,248, which is incorporated herein in its entirety by reference, can be used to provide the blood glucose values to the infusion pump control and the existing IV connection can be used to administer the insulin to the patient.

[0098] It is important to appreciate that numerous combinations of devices in the hospital-based system can be used with the closed loop controller of the present invention. For example, as described in **FIG. 39***b* compared to the preferred system in **FIG. 39***a*, an auto blood glucose/intravenous insulin infusion system can automatically withdraw and analyze blood for glucose concentration at fixed intervals (preferably 5-20 minutes), extrapolate the blood glucose values at a more frequent interval (preferably 1 minute), and use the extrapolated signal for calculating an iv-insulin infusion according to the controller described below. The modified auto blood glucose/intravenous insulin infusion system would eliminate the need for subcutaneous sensor compensation and subcutaneous insulin compensation (as described with regards to the lead-lag compensator below). The automatic withdrawal of blood, and subsequent glucose determination can be accomplished with existing technology (e.g. VIA or Biostator like blood glucose analyzer) or by the system described in **FIG. 40**. The system in **FIG. 40** uses a peristaltic pump **420** to withdraw blood across an amperometric sensor **410** (the same technology as

used in sensor **26**) and then return the blood with added flush (0.5 to 1.0 ml) from the reservoir **400**. The flush can consist of any makeup of saline, heparin, glucose solution and/or the like. If the blood samples are obtained at intervals longer than 1 minute but less than 20 minutes, the blood glucose determinations can be extrapolated on a minute-to-minute basis with extrapolation based on the present (n) and previous values (n−1) to work with the logic of the controller as described in detail below. For blood samples obtained at intervals greater than 20 minutes, a zero-order-hold would be used for the extrapolation. Based on these blood glucose values, the infusion device can administer insulin based on the closed loop controller described in greater detail below.

[0099] In other modifications to the system, a manual blood glucose/intravenous insulin infusion system can be used where frequent manual entry of blood glucose values from a standard blood glucose meter (e.g. YSI, Beckman, etc) and extrapolate the values at more frequent intervals (preferably 1 min) to create a surrogate signal for calculating IV-insulin infusion. Alternatively, a sensor blood glucose/intravenous insulin infusion system can use a continuous glucose sensor (e.g. vascular, subcutaneous, etc.) for frequent blood glucose determination. Moreover, the insulin infusion can be administered subcutaneously rather than intravenously in any one of the previous examples according to the controller described below.

[0100] In still further alternative embodiments, the system components may be combined in a smaller or greater number of devices and/or the functions of each device may be allocated differently to suit the needs of the user.

Controller

[0101] Once the hardware for a closed loop system is configured, such as in the preferred embodiments described above, the affects of the hardware on a human body are determined by the controller. In preferred embodiments, the controller **12** is designed to model a pancreatic beta cell (β-cell). In other words, the controller **12** commands the infusion device **34** to release insulin **24** into the body **20** at a rate that causes the insulin concentration in the blood to follow a similar concentration profile as would be caused by fully functioning human β-cells responding to blood glucose concentrations in the body **20**.

[0102] A controller that simulates the body's natural insulin response to blood glucose levels not only makes efficient use of insulin but also accounts for other bodily functions as well since insulin has both metabolic and mitogenic effects. Controller algorithms that are designed to minimize glucose excursions in the body without regard for how much insulin is delivered may cause excessive weight gain, hypertension, and atherosclerosis. In preferred embodiments, of the present invention, the controller **22** is intended to emulate the in vivo insulin secretion pattern and to adjust this pattern to be consistent with in vivo β-cell adaptation. The in vivo β-cell response in subjects with normal glucose tolerance (NGT), with widely varying insulin sensitivity (S_I), is the optimal insulin response for the maintenance of glucose homeostasis.

The β-Cell and PID CONTROL

[0103] Generally, the in vivo β-cell response to changes in glucose is characterized by "first" and "second" phase insulin responses. This biphasic insulin response is clearly seen during hyperglycemic clamps applied to NGT subjects, as shown in **FIG. 23** (*b*). During a hyperglycemic clamp the glucose level is rapidly increased from a basal level G_B to a new higher level G_C and then held constant at the higher-level G_C as shown in **FIG. 23** (*a*). The magnitude of the increase in glucose (ΔG) affects the insulin response. Four insulin response curves are shown for four different glucose clamp levels in **FIG. 23** (*b*).

[0104] The biphasic insulin response of a β-cell can be modeled using components of a proportional, plus integral, plus derivative (PID) controller. A PID controller is selected since PID algorithms are stable for a wide variety of non-medical dynamic systems, and PID algorithms have been found to be stable over widely varying disturbances and changes in system dynamics.

[0105] The insulin response of β-cells during a hyperglycemic clamp is diagrammed in FIGS. **24** (*a-e*) using the components of a PID controller to model the β-cell. A proportional component U_P and a derivative component U_D of the PID controller may be combined to represent a first phase insulin response **440**, which lasts several minutes. A integral component U_I of the PID controller represents a second phase insulin response **442**, which is a steady increase in insulin release under hyperglycemic clamp conditions. The magnitude of each component's contribution to the insulin response is described by the following equations:

Proportional Component Response: $U_P = K_P(G - G_B)$,

Integral Component Response:

$$U_I = K_I \int_{t_o}^{t} (G - G_B)\,dt + I_B, \text{ and}$$

Derivative Component Response:

$$U_D = K_D \frac{dG}{dt},$$

Where

[0106] U_P is the proportional component of the command sent to the insulin delivery system,

[0107] U_I is the integral component of the command sent to the insulin delivery system,

[0108] U_D is the derivative component of the command sent to the insulin delivery system,

[0109] K_P is a proportional gain coefficient,

[0110] K_I is a integral gain coefficient,

[0111] K_D is a derivative gain coefficient.

[0112] G is a present blood glucose level,

[0113] G_B is a desired basal glucose level,

[0114] t is the time that has passed since the last sensor calibration,

[0115] t_0 is the time of the last sensor calibration, and

[0116] I_B is a basal insulin concentration at t_0 or can also be described as $U_I(t_0)$

The combination of the PID components that model the two phases of insulin response by a β-cell is shown in **FIG. 24** (*e*) as it responds to the hyperglycemic clamp of **FIG. 24** (*a*). **FIG. 24** (*e*) shows that the magnitude of the first phase response **440** is driven by the derivative and proportional gains, K_D and K_P. And the magnitude of the second phase response **442** is driven by the integral gain K_I.

[0117] The components of the PID controller can also be expressed in its discrete form:

Proportional Component Response: $P_{con}^{n}=K_P(SG_f^{n}-G_{sp})$,

Integral Component Response: $I_{con}^{n}=I_{con}^{n-1}+K_I(SG_f^{n}-G_{sp})$; $I_{con}^{0}=I_b$, and

Derivative Component Response: $D_{con}^{n}=K_D dGdt_f^{n}$;

Where

[0118] K_P, K_I, and K_D are the proportional, integral, and derivative gain coefficients, SG_f and $dGdt_f$ are the filtered sensor glucose and derivative respectively, and the superscript n refers to discrete time.

[0119] An acute insulin response is essential for preventing wide postprandial glycemic excursions. Generally, an early insulin response to a sudden increase in glucose level results in less total insulin being needed to bring the glucose level back to a desired basal glucose level. This is because the infusion of insulin increases the percentage of glucose that is taken up by the body. Infusing a large amount of insulin to increase the percentage of glucose uptake while the glucose concentration is high results in an efficient use of insulin. Conversely, infusing a large amount of insulin while the glucose concentration is low results in using a large amount of insulin to remove a relatively small amount of glucose. In other words, a larger percentage of a big number is more than a larger percentage of a small number. The infusion of less total insulin helps to avoid development of insulin resistance in the user. As well, first-phase insulin is thought to result in an early suppression of hepatic glucose output.

[0120] Insulin sensitivity is not fixed and can change dramatically in a body depending on the amount of exercise by the body. In one study, for example, insulin responses in highly exercise-trained individuals (individuals who trained more than 5 days a week) were compared to the insulin responses in subjects with normal glucose tolerance (NGT) during a hyperglycemic clamp. The insulin response in exercise-trained individuals **444** was about ½ of the insulin response of the NGT subjects **446**, as shown in **FIG. 25**(*a*). But the glucose uptake rate for each of the individuals (exercise-trained **448** or normal **450**) was virtually identical, as shown in **FIG. 25** (*b*). Thus, it can be speculated that the exercise-trained individuals have twice the insulin sensitivity and half of the insulin response leading to the same glucose uptake as the NGT individuals. Not only is the first phase insulin response **440** reduced due to the effects of exercise, but the second phase insulin response **442** has also been shown to adjust to insulin sensitivity, as can be seen in **FIG. 25**(*a*).

[0121] In preferred embodiments, a closed loop control system may be used for delivering insulin to a body to compensate for β-cells that perform inadequately. There is a desired basal blood glucose level G_B for each body. The difference between the desired basal blood glucose level G_B and an estimate of the present blood glucose level G is the glucose level error G_E that must be corrected. The glucose level error G_E is provided as an input to the controller **12**, as shown in **FIG. 26**.

[0122] If the glucose level error G_E is positive (meaning that the present estimate of the blood glucose level G is higher than the desired basal blood glucose level G_B) then the controller **12** generates an insulin delivery command **22** to drive the infusion device **34** to provide insulin **24** to the body **20**. In terms of the control loop, glucose is considered to be positive, and therefore insulin is negative. The sensor **26** senses the ISF glucose level and generates a sensor signal **16**. The sensor signal **16** is filtered and calibrated to create an estimate of the present blood glucose level **452**. In particular embodiments, the estimate of the present blood glucose level G is adjusted with correction algorithms 454 before it is compared to the desired basal blood glucose level G_B to calculate a new glucose level error G_E to start the loop again.

[0123] If the glucose level error G_E is negative (meaning that the present estimate of the blood glucose level is lower than the desired basal blood glucose level G_B) then the controller **12** reduces or stops the insulin delivery depending on whether the integral component response of the glucose error G_E is still positive.

[0124] If the glucose level error G_E is zero, (meaning that the present estimate of the blood glucose level is equal to the desired basal blood glucose level G_B) then the controller **12** may or may not issue commands to infuse insulin depending on the derivative component (whether the glucose level is raising or falling) and the integral component (how long and by how much glucose level has been above or below the basal blood glucose level G_B).

[0125] To more clearly understand the effects that the body has on the control loop, a more detailed description of the physiological affects that insulin has on the glucose concentration in the interstitial fluid (ISF) is needed. In preferred embodiments, the infusion device **34** delivers insulin through the cannula **56** of the infusion set **38** into the ISF of the subcutaneous tissue **44** of the body **20**. And the insulin **24** diffuses from the local ISF surrounding the cannula into the blood plasma and then spreads throughout the body **20** in the main circulatory system, as described in the block diagram of **FIG. 27**. The insulin then diffuses from the blood plasma into the interstitial fluid ISF substantially through out the entire body. The insulin **24** binds with and activates membrane receptor proteins on cells of body tissues. This facilitates glucose permeation into the activated cells. In this way, the tissues of the body **20** take up the glucose from the ISF. As the ISF glucose level decreases, glucose diffuses from the blood plasma into the ISF to maintain glucose concentration equilibrium. Finally, the glucose in the ISF permeates the sensor membrane and affects the sensor signal **16**.

[0126] In addition, insulin has direct and indirect affects on liver glucose production. Increased insulin concentration decreases liver glucose production. Therefore, acute and immediate insulin response not only helps the body to efficiently take up glucose but also substantially stops the liver from adding to the glucose in the blood stream. In alternative embodiments, insulin is delivered more directly

into the blood stream instead of into the interstitial fluid, such as delivery into veins, arteries, the peritoneal cavity, or the like. And therefore, any time delay associated with moving the insulin from the interstitial fluid into the blood plasma is diminished. In other alternative embodiments, the glucose sensor is in contact with blood or body fluids other than interstitial fluid, or the glucose sensor is outside of the body and measures glucose through a non-invasive means. The embodiments that use alternative glucose sensors may have shorter or longer delays between the blood glucose level and the measured blood glucose level.

Selecting Controller Gains

[0127] In preferred embodiments, the controller gains K_P, K_I, and K_D, are selected so that the commands from the controller **12** cause the infusion device **34** to release insulin **24** into the body **20** at a rate, that causes the insulin concentration in the blood to follow a similar concentration profile, as would be caused by fully functioning human β-cells responding to blood glucose concentrations in the body. In preferred embodiments, the gains may be selected by observing the insulin response of several normal glucose tolerant (NGT) individuals, with healthy normally functioning β-cells. The first step in determining a set of controller gains is to take periodic measurements of blood glucose and blood insulin concentrations from the group of NGT individuals. Second, each individual in the group is subjected to a hyperglycemic clamp, while continuing to periodically measure and record the blood glucose and blood insulin concentrations. Third, a least squares curve fit is applied to the recorded blood insulin concentrations measured over time for each individual. The result is a set of curves representing the insulin responses to the hyperglycemic clamp for each individual of the group. Fourth, the curves are used to calculate the controller gains K_P, K_I, and K_D, for each individual. And finally, the proportional gains from each of the individuals are averaged together to obtain an average proportional gain, K_P, to be used in a controller **12**. Similarly, the integral gains, K_I, and the derivative gains, K_D, are averaged to obtain an average integral gain, K_I, and an average derivative gain, K_D, for the controller **12**. Alternatively, other statistical values may be used instead of averages such as, maximums, minimums, the high or low one, two or three sigma standard deviation values, or the like. The gains calculated for various individuals in a group may be filtered to remove anomalous data points before statistically calculating the gains to be used in a controller.

[0128] In an example, a least squares curve-fitting method is used to generate representative insulin response curves from two fasted individuals in a group, as shown in FIGS. **28** (*a* and *b*). Then the controller gains were calculated from the insulin response curves of the two representative individuals and are shown in Table 1. When calculating the controller gains, the insulin clearance rate (k), was assumed to be 10 (ml of insulin)/min/(kg, of body weight). The insulin clearance rate k is the rate that insulin is taken out of the blood stream in a body. Finally, the average value for each type of gain is calculated using the measurements from the group, as shown in Table 1.

TABLE 1

PID Controller Gains Calculated From The Insulin Response Curves Of Two NGT Individuals.

Individuals	Proportional Gain, K_P	Integral Gain, K_I	Derivative Gain, K_D
a	0.000406	0.005650	0.052672
b	0.000723	0.003397	0.040403
Average	0.000564	0.004523	0.046537

[0129] The controller gains may be expressed in various units and/or may be modified by conversion factors depending on preferences for British or S. I. Units, floating-point or integer software implementation, the software memory available, or the like. The set of units for the controller gains in Table 1 is:

K_P: (mU of insulin)/min/(Kg of body weight) per (mg of glucose)/(dl of plasma);

K_I: (mU of insulin)/min/(Kg of body weight) per (mg of glucose)/(dl of plasma) min.; and

K_D: (mU of insulin)/min/(Kg of body weight) per (mg of glucose)/(dl of plasma)/min.

[0130] In alternative embodiments, other curve fitting methods are used to generate the insulin response curves from the measurements of blood insulin concentrations.

[0131] An estimate of an insulin clearance rate (k), the individual's body weight (W), and the insulin sensitivity S_I are needed to calculate the controller gains from the insulin response curves for each NGT individual. The insulin clearance rate (k) is generally proportional to body weight and is well documented in literature. The individual's insulin sensitivity S_I may be measured using an intravenous glucose tolerance test, a hyperinsulinemic clamp, or in the case of a diabetic, comparing the individual's daily insulin requirement to their daily carbohydrate intake.

[0132] In particular embodiments, two parameters, the insulin sensitivity S_I and the insulin clearance rate k, are measured for each individual. In other embodiments, the insulin clearance rate k is estimated from literature given the individual's body weight. In other particular embodiments, longer or shorter insulin clearance times are used. In still other embodiments, all of the parameters are estimated. In additional embodiments, one or more parameters are measured, while at least one parameter is estimated from literature.

[0133] In other alternative embodiments, the controller gains are calculated using a group of individuals with similar body types. For example, the insulin response to a hyperglycemic clamp may be measured for several tall, thin, NGT, males in order to calculate the controller insulin response gains for each individual in the group. Then the gains are statistically combined to generate a set of representative controller gains for tall, thin, NGT, males. The same could be done for other groups such as, but not limited to, short, heavy, NGT, females; medium height, medium weight, highly exercised trained, females; average height and weight 10 year olds; or the like. Then the controller gains are selected for each individual user based on the group that best represents them. In further alternative embodiments, con-

troller gains are uniquely selected for each individual user. In particular embodiments, the controller gains for a user are selected based on measurements of insulin sensitivity, insulin clearing time, insulin appearance time, insulin concentration, body weight, body fat percentage, body metabolism, or other body characteristics such as pregnancy, age, heart conditions, or the like.

[0134] In other alternative embodiments, the controller gains are estimated as a function of a user's body weight W and insulin sensitivity S_I. A series of observations are used to justify this method. The first observation is that the controller gains are proportional to each other. In other words, small changes in glucose concentration cause a small derivative response U_D, a small proportional response U_P and a small integral response U_I. And larger changes in glucose concentration cause a proportionally larger derivative response U_D, a proportionally larger proportional U_P response and a proportionally larger integral response U_I, as shown in **FIG. 23** (*b*). Changes in the glucose concentration proportionally affect all three components of the controller response U_{PID}. The second observation is that the first phase insulin response ($\phi 1$) is proportional to the derivative gain K_D. And the third observation is that two constants may be readily obtained form information in published literature or may be measured from a cross-section of the general population. The two constants are the insulin clearance rate (k) for a human given a body weight and the disposition index (DI) for a human given a change in glucose concentration.

[0135] While there are multiple sources for the information needed to calculate the insulin clearance rate k, one source is the article "Insulin clearance during hypoglycemia in patients with insulin-dependent diabetes mellitus", written by Kollind M et al., published in *Horm Metab Res,* 1991 July;23(7):333-5. The insulin clearance rate k is obtained from the insulin infused divided by the steady state plasma insulin concentration. An insulin clearance constant A_k, which is independent of an individual's body weight, may be obtained by dividing the insulin clearance rate k (measured from a particular individual) by the individual's body weight. The insulin clearance constant A_k is generally the same for all humans, except under extenuating circumstances such as after an individual has contracted HIV, other metabolic affecting diseases, or the like.

[0136] The disposition index (DI) for a human given a change in glucose concentration is available from information presented in the article "Quantification of the relationship between insulin sensitivity and beta-cell function in human subjects. Evidence for a hyperbolic function", written by Khan S E et al., published in *Diabetes,* 1993 November; 42(11):1663-72.

[0137] Both, the disposition index DI and the insulin clearance rate k may be measured directly from tests. The disposition index DI may be calculated given the first phase insulin response measured form a glucose clamp test and the individual's insulin sensitivity measured from an insulin sensitivity test. The insulin clearance rate k may be measured from an insulin clearance test. The glucose clamp test and the insulin clearance test are described in the above-mentioned articles and are well known in the art. The insulin sensitivity S_I may be measured using an intravenous glucose tolerance test or a hyperinsulinemic clamp test.

[0138] Given these observations, then the following parameters may be measured from an NGT individual's insulin response to a glucose clamp: a desired first phase insulin response $\phi 1$, the ratio of K_D to K_P, and the ratio of K_D to K_I. Then the derivative gain K_D may be calculated from the first phase insulin response $\phi 1$ using the constants k and DI. And finally K_P and K_I may be calculated using the ratios of K_D to K_P and K_D to K_I.

[0139] The first phase insulin response $\phi 1$ may be observed in a NGT individual as the area under the insulin response curve during approximately the first 10 minutes of a glucose clamp. The increase in the glucose concentration during the glucose clamp is

$$\Delta G=(G-G_B),$$

[0140] where

[0141] G is equal to Gc, the glucose concentration during the clamp, and

[0142] G_B is the basal glucose concentration before the clamp.

The importance of the first phase insulin response $\phi 1$ has been emphasized by studies indicating that, in subjects with normal glucose tolerance (NGT), the product of first phase insulin response $\phi 1$ and insulin sensitivity (S_I) is a constant known as the disposition index,

$$DI = \phi 1 S_I.$$

$$\text{Therefore, } \phi 1 = \frac{DI}{S_I}.$$

For a different ΔG there is a different $\phi 1$ and therefore a different DI. But, the ratio $DI/\Delta G$ is substantially constant even for different individuals with different insulin sensitivities.

[0143] The insulin sensitivity S_I is defined as the percentage of the glucose concentration that the body tissues will take up for a given amount of insulin. The β-cell naturally adapts to changes in insulin sensitivity by adjusting the amount of insulin it secretes during the first phase insulin response $\phi 1$. This suggests that the body naturally seeks an optimal level of glucose tolerance. A controller that mimics this characteristic of the β-cell more accurately simulates the body's natural insulin response.

[0144] The instantaneous insulin response (RI) may be calculated given the insulin clearance rate (k) and the first phase insulin response $\phi 1$,

$$R_I=k\phi 1$$

[0145] The insulin clearance rate k is proportional to body weight (W), therefore substituting a proportional constant A_k and the user's body weight W for k and replacing $\phi 1$ with the ratio of DI over S_I yields the following equation:

$$R_I = A_k W \frac{DI}{S_I}.$$

[0146] The instantaneous insulin response R_I may also be expressed as the product of the derivative gain K_D and the change in glucose concentration ΔG,

$$R_I = K_D \Delta G.$$

[0147] Setting the two equations for R_I equal to each other and solving for K_D yields,

$$K_D = \frac{W}{S_I} \frac{A_k 2DI}{\Delta G}$$

[0148] As mentioned above, DI/ΔG and A_k are constants available or calculated from data in published literature. Combining the constants into a single constant, Q,

$$Q = \frac{A_k DI}{\Delta G},$$

yields an equation for the derivative gain K_D that is a function of the user's body weight W and the user's insulin sensitivity S_I,

$$K_D = \frac{W}{S_I} Q.$$

Once the derivative gain K_D is calculated, the proportional and integral gains are calculated using ratios. The ratio of K_D/K_P can be set to the dominant time constant for insulin action, ranging from 10-60 minutes, but more typically 20-40 minutes and preferably 30 minutes. For example, calculating K_P given K_D using a time constant of 30 minutes, yields the following relationship:

$$\frac{K_D}{K_P} = 30 \Rightarrow K_P = \frac{K_D}{30}.$$

In a similar fashion, the ratio of K_D/K_I can be set to the average ratio measured from a population of NGT individuals. And K_I can be calculated from K_D.

[0149] In particular embodiments, the user enters their body weight W and insulin sensitivity S_I into the device that contains the controller. Then the controller gains are automatically calculated and used by the controller. In alternative embodiments, an individual enters the user's body weight W and insulin sensitivity S_I into a device and the device provides the information to the controller to calculate the gains.

[0150] A study was conducted to confirm that the insulin response for an individual could be reproduced using the glucose sensor as an input. In the study, glucose and insulin measurements were taken while a hyperglycemic clamp was applied to a NGT individual. The glucose level measurements, shown in **FIG. 29** (*a*), were used as the inputs to a mathematical model created to simulate a PID insulin response controller. The insulin dosing commanded by the controller in response to the glucose clamp very closely approximates the actual insulin appearance in the NGT individual, as shown in **FIG. 29** (*b*). The insulin concentration measured from periodic blood samples **456** taken from the individual during the test are represented by dots in **FIG. 29** (*b*). The output from the mathematical model simulating the insulin response commanded by the controller is shown as a solid line **458** in **FIG. 29** (*b*).

[0151] Three different devices were used to measure the individual's blood glucose during the study. Blood glucose meter readings **460** from periodic blood samples taken from the individual are represented by the dots in **FIG. 29** (*a*). Two MiniMed sensors (such as those described in the section entitled "sensor", below) were placed in the individual's subcutaneous tissue, and the sensor readings **462**, **464** are shown as lines in **FIG. 29** (*a*). The sensor readings **462**, **464** are slightly delayed compared to the meter readings **460**. The delay is most likely due to the delay between blood glucose and interstitial fluid (ISF) glucose and can be substantially corrected through the use of a filter if needed. In this study, the delay was not corrected by a filter and did not significantly affect the controller's ability to command an insulin response that matches the natural response of the NGT individual. This study indicates that the PID insulin response controller model is a good minimal model of insulin secretion that captures the biphasic response of healthy β-cells. Correction of the delay is only expected to increase the accuracy of the model.

Fuzzy Logic to Select Between Multiple Sets of Controller Gains

[0152] In preferred embodiments, one set of controller gains is used for a particular individual. In alternative embodiments, more than one set of controller gains is used, and fuzzy logic is used to select between sets of controller gains and to determine when to change from one set of controller gains to another. In particular alternative embodiments, the controller gains are different if the glucose level is above or below the desired glucose basal level. In other alternative embodiments, the controller gains are different if the glucose level is increasing or decreasing. A justification for different sets of gains comes from physiological studies that indicate that β-cells turn off faster than they turn on. In still other alternative embodiments, the controller gains are different depending on whether the glucose level is above or below the desired glucose basal level and whether the glucose level is increasing or decreasing, which results in four sets of controller gains. In additional alternative embodiments, the controller gains change depending on the magnitude of the hypoglycemic excursion. In other words, the controller gains for small changes in glucose are different than those for large changes in glucose.

Self-Tuning Controller Gains

[0153] Further embodiments may include a controller that self tunes one or more the gains, K_P, K_I, K_D to accommodate changes in insulin sensitivity. In particular embodiments, previous measurements of glucose levels are compared to the desired basal glucose level G_B. For example, the desired basal glucose level G_B is subtracted from the previous glucose level measurements. Then any negative values, within a predefined time window, are summed (in essence integrating the glucose level measurements that were below the basal glucose level G_B). If the resulting sum is greater than a pre-selected hypoglycemic integral threshold, then the controller gains are increased by a factor (1+α). Conversely, if the integral of the glucose level measurements that were measured above the basal glucose level G_B within

the predefined time window is greater than a pre-selected hyperglycemic integral threshold, then the controller gains are decreased by a factor $(1-\alpha)$.

[0154] In particular embodiments, the predefined time window over which the glucose concentration integrals are evaluated is generally 24 hours, and the controller gains are adjusted if needed at the end of each predefined time window. In alternative embodiments, the integrals of the glucose level measurements are continuously calculated over a moving window of time, and if either integral exceeds a threshold, the gains are immediately adjusted. In particular embodiments, the moving time window is one hour, and the time window may be restarted whenever the gains are adjusted. In other alternative embodiments, the time window is longer or shorter depending on the sensor accuracy, the rate at which an individual's insulin sensitivity changes, the computational capabilities of the hardware, or the like.

[0155] In particular embodiments, the adjustment amount (α) is 0.01. In alternative embodiments, the adjustment amount α is greater or smaller depending on the sensor accuracy, the rate at which an individual's insulin sensitivity changes, the rate at which the sensor sensitivity S_I changes, or the like. In still other alternative embodiments, the adjustment amount α is made larger or smaller depending on the amount that the integral of the measured glucose levels exceeds a threshold. In this way, the gains are adjusted by greater amounts if the measured glucose level G is significantly deviating from the desired blood glucose level G_B and less if the measured glucose level G is closer to the desired blood glucose level G_B. In additional alternative embodiments, the controller employs a Kalman filter.

Modifying the PID Controller to Incorporate an Integrator Leak

[0156] In preferred embodiments, the PID control response was described with constant gain components, K_P, K_I, K_D. Although the preferred control response guarantees zero steady-state error (i.e. steady state glucose minus a desired basal glucose $(G_B)=0$), inherently, the integral component,

$$U_1 = K_1 \int_{t_o}^{t} (G - G_B)\,dt + U_I(t_0),$$

destabilizes feedback control because there is no temporal wind down of the insulin response while the integral component models the increase in the insulin response. Without any correction, the integral component has a tendency to over-estimate the increase in the insulin response. Since a small difference between steady-state glucose and G_B is typically acceptable in insulin response control, an alternative modeling of the integral component can incorporate an integrator leak to reduce the magnitude of the destabilizing effect. Specifically, changes in $U_I(t)$ can be described by a term proportional to the error in glucose and a term that leaks in proportion to the magnitude of U_I. This can be expressed in the formula:

$$\frac{dU_I}{dt} = K_I(G - G_B) - K_{LEAK}U_I;\ \text{with initial condition } U_I(t_0)$$

The parameter K_{LEAK} is the reciprocal time constant of the rate of leaking (τ_{LEAK} in min=$1/K_{LEAK}$), where τ_{LEAK} is a tuning parameter that can be set based on empirical data, and be tied with the other gain components K_P, K_I, K_D. However, the current realization of the artificial β-cell has τ_{LEAK} as a user input. U_I can also be expressed in discrete form by standard methods.

Post-Controller (Lead/Lag) Compensator

[0157] In preferred embodiments, commands are issued from the controller without regard to where in the body the insulin delivery system will infuse the insulin. In essence, the assumption is that the insulin is either delivered directly into the blood stream for immediate use by the body, or that any time delays caused by delivering the insulin somewhere in the body other than the blood stream can be compensated for by adjusting K_P, K_I, and K_D. In this case, the commands generally model a β-cell insulin secretion profile, an example of which is shown in **FIG. 35** (*a*). And since the β-cells secrete insulin directly into the blood stream, the β-cell insulin secretion profile is the intended blood plasma insulin concentration profile. However, an insulin delivery delay may distort the intended blood plasma insulin concentration profile, as shown in **FIG. 35** (*b*). The insulin delivery delay is the amount of time between the instant that the command is given to the insulin delivery system to infuse insulin and the time that insulin reaches the blood plasma. An insulin delivery delay may be caused by a diffusion delay, represented by a circle with an arrow **528** in **FIG. 20**, which is the time required for insulin that has been infused into a tissue to diffuse into the blood stream. Other contributors to insulin delivery delay may include, time for the delivery system to deliver the insulin to the body after receiving a command to infuse insulin, time for the insulin to spread through out the circulatory system once it has entered the blood stream, and/or by other mechanical or physiological causes. In addition, the body clears insulin even while an insulin dose is being delivered from the insulin delivery system into the body. Since insulin is continuously cleared from the blood plasma by the body, an insulin dose that is delivered to the blood plasma too slowly or is delayed is at least partially, if not significantly, cleared before the entire insulin dose fully reaches the blood plasma. And therefore, the insulin concentration profile in the blood plasma never achieves the same peak (nor follows the same profile) it would have achieved if there were no delay. Given an insulin dose delivered all at once into the blood plasma at time zero, the insulin concentration in the blood plasma is raised virtually instantaneously (not shown) and then would decrease exponentially over time as the body clears (uses or filters out) the insulin, as shown in **FIG. 36** (*a*) per equation:

$$C_P = \frac{I_0}{V_p} e^{-P_1 t}$$

[0158] Where

[0159] C_P is the concentration of insulin in the blood plasma,

[0160] I_0 is a mass of the insulin dose delivered directly to the blood plasma at time zero,

[0161] V_p is a volume of the blood plasma in the body,

[0162] P_I is a reciprocal time constant for insulin clearance, and

[0163] t is the time that has passed since the delivery of the insulin dose directly into the blood plasma.

The time constant for insulin clearance P_I may be calculated using the following equation:

$$P_1 = -\frac{k}{V_P}$$

[0164] Where

[0165] k is the volume insulin clearance rate, and

[0166] V_p is a volume of the blood plasma in the body.

Or the time constant for insulin clearance P_I may be obtained by providing insulin to an individual that does not generate his own insulin, and then periodically testing blood samples from the individual for insulin concentration. Then, using an exponential curve fitting routine, generate a mathematical expression for a best-fit curve for the insulin concentration measurements, and observe the time constant in the mathematical expression.

[0167] Given the same insulin dose (delivered at time zero all at once) into the subcutaneous tissue, instead of directly into the blood plasma, the concentration of insulin in the blood plasma would begin to rise slowly as insulin diffuses from the interstitial fluid ISF into the blood plasma, as shown in **FIG. 36** (*b*). At the same time that insulin is entering the blood plasma, the body is clearing insulin from the blood. While the rate at which insulin is entering the blood plasma exceeds the insulin clearance rate, the insulin concentration in the blood plasma continues to increase. When the insulin clearance rate exceeds the rate at which insulin is entering the blood plasma from the interstitial fluid ISF, the insulin concentration in the blood plasma begins to decrease. So, the result of delivering insulin into the interstitial fluid ISF instead of directly into the blood stream is that the insulin concentration in the blood plasma is spread over time rather than increased virtually instantaneously to a peak followed by a decay.

[0168] A bi-exponential equation may be used to model the insulin concentration in blood plasma given an insulin dose delivered to the subcutaneous tissue:

$$C_P = \frac{I_0 D}{V_p V_{ISF}(P_3 - P_2)}(e^{-P_2 t} - e^{-P_3 t})$$

Where

[0169] C_P is the concentration of insulin in the blood plasma,

[0170] I_0 is the mass of the insulin dose delivered to the subcutaneous tissue at time zero,

[0171] D is a diffusion coefficient (the rate at which insulin diffuses from the interstitial fluid ISF into the blood glucose)

[0172] V_p is a volume of the blood plasma in the body,

[0173] V_{SIF} is a volume of interstitial fluid ISF that the insulin is delivered to,

[0174] P_2 is a time constant

[0175] P_3 is a time constant greater than or equal to P_2, and

[0176] t is time since the delivery of the insulin dose into the interstitial fluid ISF.

[0177] The time constants may be calculated using the quadratic formula:

$$P_2, P_3 = -\frac{a_1 \pm \sqrt{a_1^2 - 4a_0}}{2}$$

Where

$$a_1 = \frac{D+K}{V_P} + \frac{D}{V_{ISF}}, \text{ and}$$

$$a_0 = \left(\frac{D+K}{V_P}\right)\left(\frac{D}{V_{ISF}}\right) - \frac{D^2}{V_{ISF} V_P}.$$

[0178] In alternative embodiments, a post-controller lead-lag compensator **522** is used to modify the commands (U_{PID}) to compensate for the insulin delivery delay and/or the insulin clearance rate k, as shown in **FIG. 37**. The post-controller lead-lag compensator **522** is of the form

$$\frac{U_{COMP}}{U_{PID}} = \frac{s+\alpha}{s+\gamma}$$

[0179] where $1/\alpha$ and $1/\gamma$ are the lead and lag constants respectively, s is the Laplace variable, and U_{COMP} is the compensated commands calculated by the lead-lag compensator **522**.

[0180] The PID controller generates commands (U_{PID}) for a desired insulin delivery rate into the blood plasma. The commands U_{PID} are calculated and issued periodically depending on the update rate for the control loop, which is selected based on a maximum anticipated rate of change of the blood glucose level, an insulin delivery system minimum insulin dosage, insulin sensitivity, a maximum and a minimum acceptable glucose concentration, or the like. The commands U_{PID} are used as inputs to the post-controller lead-lag compensator **522**.

[0181] In particular embodiments, the compensated commands (U_{comp}) issued from the post-controller lead-lag compensator **522** uses more than one value from the controller. In particular embodiments, post-controller lead-lag compensator **522** uses the present command (U_{PID}^{n}) and the previous command (U_{PID}^{n-1}) to calculate a compensated command U_{comp} per a compensation equation:

$$U_{COMP}^{n}=(1-\gamma)U_{COMP}^{n-1}+U_{PID}^{n}+(1-\alpha)U_{PID}^{n-1}$$

[0182] Where U_{PID}^{n} the present command

[0183] U_{PID}^{n-1} is the previous command,

[0184] U_{COMP}^{n-1} is the previous compensated control output,

[0185] α is the reciprocal lead time constant in min^{-1}, and

[0186] γ is the reciprocal lag time constant in min^{-1}.

[0187] This is a first forward difference equation. However, other forms can be used alternatively (e.g. first backward or bilinear), but all result in a compensated control output (U_{COMP}) that is comprised of a weighted history of both past PID outputs (U_{PID}), and past compensated outputs (U_{COMP}).

[0188] An alternative method of modifying the commands (U_{PID}) to compensate for the insulin delivery delay and/or the insulin clearance can be performed based on a weighted history of past insulin delivery. By giving the most recent delivery history more weight, the weighted history of the previous insulin delivered can then be subtracted from the present PID control output to yield a compensated control output. Expressed in Laplace domain this results in:

$$U_{COMP} = PID\ E - \frac{\lambda}{s+\alpha} U_{COMP}$$

[0189] Where E is the Laplace transformed error signal ($G-G_B$), λ determines how much the PID output is reduce in proportion to the weighted history of past control outputs, and α is the reciprocal time constant determining how long a history is weighted (the preferred value of α would be equal to the reciprocal dominant time constant or subcutaneous insulin appearance, P_2). Solving the compensated signals as a function of the error results in:

$$\frac{U(s)}{E(s)} = PID\frac{s+\alpha_w}{s+(\alpha+\lambda)} = PID\frac{s+\alpha_w}{s+\gamma}$$

[0190] which is identical to the previously described lead-lag compensation.

[0191] In other alternative embodiments, additional previous command values may be used. In still other alternative embodiments, the compensation equation compensates for both time constants P_2 and P_3.

[0192] In still more alternative embodiments, the controller gains are modified to include the effects of the post-controller lead/lag compensator so that the post-controller lead/lag compensator is not needed to modify the commands to account for the insulin delivery delay.

[0193] In particular embodiments, the insulin delivery system provides finite insulin doses into the body in response to commands from the controller. The smallest amount of insulin that the insulin delivery system can deliver is the minimum finite insulin dose. The controller may generate commands for a dose of insulin to be delivered that is not a whole number multiple of the minimum finite insulin dose. Therefore, either too much or too little insulin is delivered by the insulin delivery system in response to the commands. In particular alternative embodiments, the post-controller lead-lag compensator truncates the command to the nearest whole number multiple of the minimum finite insulin dose and adds the remaining commanded volume of insulin to the next command. In other alternative embodiments, a compensator rounds the command to the nearest whole number multiple of the minimum finite insulin dose. In still other alternative embodiments, other methods are used to compensate for the difference between the commands and the nearest whole number multiple of the minimum finite insulin dose. In other embodiments, no compensation is needed.

Eliminating the Lead-Lag Compensator with Feedback of Predicted Plasma Insulin

[0194] Yet in another alternative embodiment, the PID control commands may be modified to emulate the effect of plasma insulin on a β-cell to determine optimal insulin administration by feeding back a predicted plasma insulin based on the subcutaneous insulin infusion. The net effect of such feedback is to replace an undesired dynamic with a more desirable one and achieve a plasma insulin profile that a β-cell would achieve. This can be seen as follows (using Laplace transformed variables). Assume the relation between glucose above basal ($G-G_B$) and insulin delivery (ID) is described by a linear transfer function

$$ID(s)=C(s)(G(s)-G_B)$$

where, C(s) may be, but is not necessarily, described by the PID controller transfer function. If the β-cell is using peripheral insulin ($I_p(s)$) levels to suppress insulin secretion the predicted rate of insulin delivery would be modified as:

$$ID(s)=C(s)(G(s)-G_B)-kI_p(s)$$

For portal insulin delivery the relation between ID(s) and plasma insulin $I_p(s)$ is known to be approximated by a single time delay:

$$I_p(s) = \frac{k_1}{s+\alpha} ID(s)$$

Substituting $I_p(s)$ value into the previous formula and making k large results in:

$$ID(s) = \frac{C(s)(G(s)-G_B)}{1+\frac{kk_1}{s+\alpha}} \approx C(s)\frac{s+\alpha}{kk_1}(G(s)-G_B);\ 1 \ll \frac{kk_1}{s+\alpha}$$

Which would completely cancel the undesirable time constant $1/\alpha$. In practice a lower value of k would be used resulting in:

$$ID(s) = C(s)(G(s)-G_B) - \frac{kk_1}{s+\alpha} ID(s)$$

-continued

$$= C(s)\frac{s+\alpha}{s+\gamma}(G(s)-G_B)$$

where $\gamma=\alpha+kk_1$ (i.e. something greater than α). Thus, the effect for the β-cell, of adding a plasma insulin feedback is to replace the portal insulin delivery time constant (α) with a faster time constant ($\gamma=\alpha+kk_1$; $\gamma>\alpha$). In block diagram form:

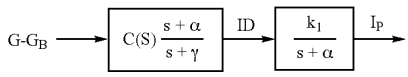

[0195] which is equivalent to:

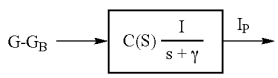

To apply this mechanism to subcutaneous insulin delivery all that is needed is the transfer function between sc insulin delivery and plasma insulin. This transfer function is well approximated by a bi-exponential time course (bolus response) or:

$$\frac{I_p(s)}{IDsc(s)} = \frac{k_2}{(s+\alpha_1)(s+\alpha_2)}$$

thus,

$$ID(s) = C(s)(G(s)-G_B) - \frac{kk_2}{(s+\alpha_1)(s+\alpha_2)}ID(s)$$

$$= C(s)\frac{1}{1+\frac{kk_2}{(s+\alpha_1)(s+\alpha_2)}}(G(s)-G_B)$$

in the limiting case as $kk_2/(s+\alpha_1)(s+\alpha_2)>>1$ this is approximately equal

$$ID(s) = C(s)\frac{(s+\alpha_1)(s+\alpha_2)}{kk_2}(G(s)-G_B)$$

where again, the undesirable time constants associated with subcutaneous insulin delivery have been eliminated. In practice they would just be replaced with more desirable rate constants (i.e. faster time constants).

Correction of Hypoglycemic Excursion Around ~200 Minutes (Wind-Down)

[0196] Previous modeling of β-cells using a PID controller gave excellent predictability of the "first" and "second" phase insulin responses during prolonged periods of increased glucose appearance. However, if the periods of increased glucose appearance is followed by a rapid decrease in glucose appearance, the PID controller would not be able to correctly predict the wind down of the insulin response to lower glucose levels. **FIG. 41**(*b*) illustrates the insulin response to the blood glucose level of **FIG. 41**(*a*) based on the clinical data (shown as data points), the PID modeling (shown as a solid line), and correction of the PID for the hypoglycemic excursion (shown as a dashed line).

[0197] In preferred embodiments, the hypoglycemic excursion is corrected by modifying the PID controller to a PD control with Adaptive Proportional Gain (or Bilinear PID controller), which is modified form of the original PID equations. As described previously, the discrete PID algorithm is as follows:

Proportional Component Response: $P_{con}^n=K_P(SG_f^n-G_{sp})$,

Integral Component Response: $I_{con}^n=I_{con}^{n-1}+K_I(SG_f^n-G_{sp})$; $I_{con}^0=I_b$, and

Derivative Component Response: $D_{con}^n=K_D dGdt_f^n$,

Where

[0198] K_P, K_I, and K_D are the proportional, integral, and derivative gain coefficients, SG_f and $dGdt_f$ are the filtered sensor glucose and derivative respectively, and the superscript n refers to discrete time.

[0199] In the Bilinear PID controller, the proportional gain K_P is based on the integrated error term. The magnitude of each component's contribution to the insulin response is described by the following equations:

$$P_{con}^n=K_p^n(SG_f^n-INT)$$

$$D_{con}^n=K_D dGdt_f^n$$

$$K_p^n=K_p^{n-1}+K_I(SG_f^n-G_{sp}),\text{ where } K_p^0=K_{P0}$$

Where the proportional gain now integrates at rate K_I (initial value K_{P0}) and the proportional component is related to an intercept value (INT) where ($INT<G_{sp}$). The modified formulation can be seen to fit the hypoglycemic glucose excursion without systematic error as the adaptive PD line shown as a dashed line in **FIG. 39**.

[0200] In additional embodiments, the Bilinear PID controller can also incorporate an integrator leak by modifying the formula to multiply the previous K_P with a value such as α as follows:

$$K_p^n=\alpha K_p^{n-1}+K_I(SG_f^n-G_{sp}),\text{ where } \alpha\approx 00.99$$

[0201] An alternative method of correcting the hypoglycemic glucose excursion can be performed by integrator clip into the PID control. PID controllers generally have integrator-reset rules that prevent excessive "winding" and such a rule can be used to correct the hypoglycemic glucose excursion. For example, the integrator can be clipped as follows:

If ($SG\leqq 60$ mg/dl AND $I_{con}^{n-1}>K_P(SP-60)$) then $I_{con}^{n-1}=K_P(SP-60)$

This equation resets the integrator such that if the sensor glucose falls below 60 mg/dl the insulin delivery is zero for all stable or falling sensor glucose signals. The clipping limit represents an absolute threshold, similar to the human counter regulatory response.

[0202] However, other approaches that may emulate the β-cell more accurately include the use of piecewise continuous functions. For example, the following function allows for progressive clipping to be tuned:

$$\gamma(SG) = \gamma_0 + (1-\gamma_0)\left[\frac{T_1 - SG}{T_1 - 60}\right] \text{ if}(SG \le T_1 mg/dl \text{ AND } I_{con}^{n-1} > \gamma K_P(SP-60)) \text{ then } I_{con}^{n-1} = \gamma K_P(SP-60)$$

[0203] This equation introduces two additional tuning parameters (γ_0 and T_1) and starts to check the integrator output at a higher threshold. For example, if γ_0=5 and T_1=100 mg/dl, the integrator output would be clipped to 4 K_P60 if glucose fell to 90 mg/dl, 3 K_P60 if glucose fell to 80 mg/dl and so forth until glucose reached 60 where it would be clipped at K_P60. Other functions than that proposed in the above equation (e.g. functions based on the rate of fall of glucose, or percent decrease in I_{con}) may alternatively be used.

System Configurations

[0204] The following sections provide exemplary, but not limiting, illustrations of components that can be utilized with the controller described above. Various changes in components, layout of various components, combinations of elements, or the like may be made without departing from the scope of the embodiments of the invention.

[0205] Before it is provided as an input to the controller **12**, the sensor signal **16** is generally subjected to signal conditioning such as pre-filtering, filtering, calibrating, or the like. Components such as a pre-filter, one or more filters, a calibrator and the controller **12** may be split up or physically located together, and may be included with a telemetered characteristic monitor transmitter **30**, the infusion device **34**, or a supplemental device. In preferred embodiments, the pre-filter, filters and the calibrator are included as part of the telemetered characteristic monitor transmitter **30**, and the controller **20** is included with the infusion device **34**, as shown in **FIG. 8**(*b*). In alternative embodiments, the pre-filter is included with the telemetered characteristic monitor transmitter **30** and the filter and calibrator are included with the controller **12** in the infusion device, as shown in **FIG. 8**(*c*). In other alternative embodiments, the pre-filter may be included with the telemetered characteristic monitor transmitter **30**, while the filter and calibrator are included in the supplemental device **41**, and the controller is included in the infusion device, as shown in **FIG. 8** (*d*). To illustrate the various embodiments in another way, **FIG. 9** shows a table of the groupings of components (pre-filter, filters, calibrator, and controller) in various devices (telemetered characteristic monitor transmitter, supplemental device, and infusion device) from FIGS. **8** (*a-d*). In other alternative embodiments, a supplemental device contains some of (or all of) the components.

[0206] In preferred embodiments, the sensor system generates a message that includes information based on the sensor signal such as digital sensor values, pre-filtered digital sensor values, filtered digital sensor values, calibrated digital sensor values, commands, or the like. The message may include other types of information as well such as a serial number, an ID code, a check value, values for other sensed parameters, diagnostic signals, other signals, or the like. In particular embodiments, the digital sensor values Dsig may be filtered in the telemetered characteristic monitor transmitter **30**, and then the filtered digital sensor values may be included in the message sent to the infusion device **34** where the filtered digital sensor values are calibrated and used in the controller. In other embodiments, the digital sensor values Dsig may be filtered and calibrated before being sent to the controller **12** in the infusion device **34**. Alternatively, the digital sensor values Dsig may be filtered, and calibrated and used in the controller to generate commands **22** that are then sent from the telemetered characteristic monitor transmitter **30** to the infusion device **34**.

[0207] In further embodiments, additional optional components, such as a post-calibration filter, a display, a recorder, and a blood glucose meter may be included in the devices with any of the other components or they may stand-alone. Generally, if a blood glucose meter is built into one of the devices, it will be co-located in the device that contains the calibrator. In alternative embodiments, one or more of the components are not used.

[0208] In preferred embodiments, RF telemetry is used to communicate between devices, such as the telemetered characteristic monitor transmitter **30** and the infusion device **34**, which contain groups of components. In alternative embodiments, other communication mediums may be employed between devices such as wires, cables, IR signals, laser signals, fiber optics, ultrasonic signals, or the like.

Filtering

[0209] In preferred embodiments, the digital sensor values Dsig and/or the derivative of the digital sensor values are processed, filtered, modified, analyzed, smoothed, combined, averaged, clipped, scaled, calibrated, or the like, to minimize the effects of anomalous data points before they are provided as an input to the controller. In particular embodiments, the digital sensor values Dsig are passed through a pre-filter **400** and then a filter **402** before they are passed to the transmitter **70**, as shown in **FIG. 16**. The filters are used to detect and minimize the effects of anomalous digital sensor values Dsig. Some causes of anomalous digital sensor values Dsig may include temporary signal transients caused by sensor separation from the subcutaneous tissue, sensor noise, power supply noise, temporary disconnects or shorts, and the like. In particular embodiments, each individual digital sensor value Dsig is compared to maximum and minimum value-thresholds. In other particular embodiments, the differences between consecutive pairs of digital sensor values Dsig are compared with rate-of-change-thresholds for increasing or decreasing values.

[0210] Pre-Filter

[0211] In particular embodiments, the pre-filter **400** uses fuzzy logic to determine if individual digital sensor values Dsig need to be adjusted. The pre-filter **400** uses a subset of a group of digital sensor values Dsig to calculate a parameter and then uses the parameter to determine if individual digital sensor values Dsig need to be adjusted in comparison to the group as a whole. For example, the average of a subset of a group of digital sensor values Dsig may be calculated, and then noise thresholds may be placed above and below the average. Then individual digital sensor values Dsig within the group are compared to noise thresholds and eliminated or modified if they are outside of the noise thresholds.

[0212] A more detailed example is provided below to more clearly illustrate, but not limit, an embodiment of a pre-filter. A group of eight digital sensor values Dsig are shown in **FIG. 17** including a most recently sampled value, labeled L, sampled from the analog sensor signal Isig at time i, and the seven previous values K, H, G, F, E, D, and C sampled at times (i-1) through (i-7). An average value is calculated using the four temporally middle values in the group, H, G, F, and E sampled at times (i-2) through (i-5). The calculated average value is represented as a dashed/dotted average line **404**. A high noise threshold **406** is established at 100% above the average line **404**. In other words, the magnitude of the high noise threshold **406** is two times the magnitude of the average line **404**. A negative noise threshold **408** is established at 50% below the average line **404**. In other words, the magnitude of the negative noise threshold **408** is one half of the magnitude of the average line **404**. The individual magnitudes of each of the eight values, L, K, H, G, F, E, D, and C are compared to the high and negative noise thresholds **406** and **408**. If a value is above the high noise threshold **406** or below the negative noise threshold **408** then the value is considered anomalous and the anomalous value is replaced with the magnitude of the average line **404**. In the example shown in **FIG. 17**, the value K is above the high noise threshold **406** so it is replaced with the average value M. Also, the value D is below the negative noise threshold **408** so it is replaced with the average value N. In this way noisy signal spikes are reduced. Therefore, in the example, values L, K, H, G, F, E, D, and C are inputs to the pre-filter **400** and values L, M, H, G, F, E, N, and C are outputs from the pre-filter **400**. In alternative embodiments, other noise threshold levels (or percentages) may be used. In other alternative embodiments, values outside of the thresholds may be replaced with values other than the average value, such as the previous value, the value of the closest threshold, a value calculated by extrapolating a trend line through previous data, a value that is calculated by interpolation between other values that are inside the thresholds, or the like.

[0213] In preferred embodiments, when any of a group's values are outside of the noise thresholds **406** or **408** then a warning flag is set. If one to three values are outside of the noise thresholds **406** or **408**, a 'noise' flag is set. If more than three values are outside of the noise thresholds **406** or **408**, a 'discard' flag is set which indicates that the whole group of values should be ignored and not used. In alternative embodiments, more or less values need be outside of the thresholds **406** or **408** to trigger the 'noise' flag or the 'discard' flag.

[0214] In preferred embodiments, each digital sensor value Dsig is checked for saturation and disconnection. To continue with the example of **FIG. 17**, each individual value is compared to a saturation threshold **410**. If a value is equal to or above the saturation threshold **410** then a 'saturation' flag is set. In particular embodiments, when the 'saturation' flag is set, a warning is provided to the user that the sensor **26** may need calibration or replacement. In further particular embodiments, if an individual digital sensor value Dsig is at or above the saturation threshold **410**, the individual digital sensor value Dsig may be ignored, changed to a value equal to the average line **404**, or the entire group of values associated with the individual digital sensor value Dsig may be ignored.

[0215] In preferred embodiments, the saturation threshold **410** is set at about 16% below the maximum value of the range of digital sensor values that may be generated. In preferred embodiments, the maximum digital sensor value represents a glucose concentration greater than 150 mg/dl. In alternative embodiments, the maximum digital sensor value may represent larger or smaller a glucose concentrations depending on the range of expected glucose concentrations to be measured, the sensor accuracy, the sensor system resolution needed for closed loop control, or the like. The full range of values is the difference between the maximum and the minimum digital sensor value that may be generated. Higher or lower saturation threshold levels may be used depending on an expected signal range of the sensor, sensor noise, sensor gains, or the like.

[0216] Similarly, in preferred embodiments, if a digital signal value Dsig is below a disconnect threshold **412**, then a 'disconnect' flag is set indicating to a user that the sensor is not properly connected to the power supply and that the power supply or sensor may need replacement or recalibration. In further particular embodiments, if a digital sensor value Dsig is below the disconnect threshold **412**, the individual value may be ignored, changed to a value equal to the average line **404**, or the entire group of values associated with the individual digital sensor value Dsig may be ignored. In preferred embodiments, the disconnect threshold **410** is set at about 20% of the full range of values. Higher or lower disconnect threshold levels may be used depending on an expected signal range of the sensor, sensor system noise, sensor gains, or the like.

[0217] In alternative embodiments, other methods are used to pre-filter the digital sensor values Dsig such as rate-of-change thresholds, rate-of-change squared thresholds, noise thresholds about a least squares fit line rather than about the average of a subset of a group's values, higher or lower noise threshold lines, or the like.

Noise Filter

[0218] After the digital sensor values Dsig are evaluated, and if necessary, modified by the pre-filter **400**, the digital sensor values Dsig are passed to the filter **402**. The filter **402** may be used to reduce noise in particular frequency bands. Generally the body's blood glucose level **18** changes relatively slowly compared to a rate at which digital sensor values Dsig are collected. Therefore, high frequency signal components are typically noise, and a low pass filter may be used to improve the signal to noise ratio.

[0219] In preferred embodiments, the filter **402** is a finite impulse response (FIR) filter used to reduce noise. In particular embodiments, the FIR filter is a 7th order filter tuned with a pass band for frequencies from zero to 3 cycles per hour (c/hr) and a stop band for frequencies greater than about 6 c/hr, as shown in an example frequency response curve **414** in **FIG. 18**. However, typically FIR filters tuned with a pass band for frequencies from zero up to between about 2 c/hr and 5 c/hr and a stop band beginning at 1.2 to three times the selected pass band frequency will sufficiently reduce noise while passing the sensor signal. In particular embodiments, FIR filters tuned with a pass band for frequencies from zero up to between about 2 c/hr and 10 c/hr and a stop band beginning at 1.2 to three times the selected pass band frequency will sufficiently reduce noise. In the 7th order filter, unique weighting factors are applied to each of

eight digital sensor values Dsig. The digital sensor values Dsig include the most recently sampled value and the seven previous values. The effects of a low pass filter on a digital sensor values collected at one minute intervals is shown in FIGS. **19** (*a*) and (*b*). An unfiltered sensor signal curve **416** of digital sensor values is contrasted with a curve of the same signal after the effects of a 7th order FIR filter **418**. The filtered signal curve **418** is delayed and the peaks are smoother compared to the unfiltered sensor signal curve **416**. In other particular embodiments, higher or lower order filters may be used. In still other particular embodiments, filter weighting coefficients may be applied to digital sensor values Dsig collected at time intervals shorter or longer than one minute depending on the desired sensor sample rate based on the body's physiology, the computational capabilities of the telemetered characteristic monitor transmitter **30**, the sensor's response time, or the like. In alternative embodiments, filters with other frequency responses may be used to eliminate other noise frequencies depending on the type of sensor, noise from the power supply or other electronics, the sensor's interaction with the body, the effects of body motion on the sensor signal, or the like. In still other alternative embodiments, the filter is an infinite impulse response (IIR) filter.

Delay Compensation Filter

[**0220**] Aside from noise reduction, a filter may used to compensate for time delays. Ideally, a sensor would provide a real time, noise-free measurement of a parameter that a control system is intended to control, such as a blood glucose measurement. However, realistically there are physiological, chemical, electrical, and algorithmic sources of time delays that cause the sensor measurement to lag behind the present value of blood glucose.

[**0221**] A physiological delay **422** is due to the time required for glucose to move between blood plasma **420** and interstitial fluid (ISF). The delay is represented by the circled double headed arrow **422** in **FIG. 20**. Generally, as discussed above; the sensor **26** is inserted into the subcutaneous tissue **44** of the body **20** and the electrodes **42** near the tip of the sensor **40** are in contact with interstitial fluid (ISF). But the desired parameter to be measured is the concentration of blood glucose. Glucose is carried throughout the body in blood plasma **420**. Through the process of diffusion, glucose moves from the blood plasma **420** into the ISF of the subcutaneous tissue **44** and vice versa. As the blood glucose level **18** changes so does the glucose level in the ISF. But the glucose level in the ISF lags behind the blood glucose level **18** due to the time required for the body to achieve glucose concentration equilibrium between the blood plasma **420** and the ISF. Studies show the glucose lag times between blood plasma **420** and ISF vary between 0 to 30 minutes. Some parameters that may affect the glucose lag time between blood plasma **420** and ISF are the individual's metabolism, the current blood glucose level, whether the glucose level is rising, or falling, or the like.

[**0222**] A chemical reaction delay **424** is introduced by the sensor response time, represented by the circle **424** surrounding the tip of the sensor **26** in **FIG. 20**. The sensor electrodes **42** are coated with protective membranes that keep the electrodes **42** wetted with ISF, attenuate the glucose concentration, and reduce glucose concentration fluctuations on the electrode surface. As glucose levels change, the protective membranes slow the rate of glucose exchange between the ISF and the electrode surface. In addition, there is a chemical reaction delay simply due to the reaction time for glucose to react with glucose oxidase GOX to generate hydrogen peroxide, and the reaction time for a secondary reaction, the reduction of hydrogen peroxide to water, oxygen and free electrons.

[**0223**] There is also a processing delay as the analog sensor signal Isig is converted to digital sensor values Dsig. In preferred embodiments, the analog sensor signal Isig is integrated over one-minute intervals and then converted to a number of counts. In essence an A/D conversion tine results in an average delay of 30 seconds. In particular embodiments, the one-minute values are averaged into 5-minute values before they are sent to the controller. The resulting average delay is two and one half minutes. In alternative embodiments, longer or shorter integration times are used resulting in longer or shorter delay times. In other embodiments the analog sensor signal current Isig is continuously converted to an analog voltage Vsig and a A/D converter samples the voltage Vsig every 10 seconds. Then six 10-second values are pre-filtered and averaged to create a one-minute value. Finally, five 1-minute values are filtered and then averaged creating a five-minute value resulting in an average delay of two and one half minutes. Other embodiments use other electrical components or other sampling rates and result in other delay periods.

[**0224**] Filters also introduce a delay due to the time required to acquire a sufficient number of digital sensor values Dsig to operate the filter. Higher order filters, by definition, require more digital sensor values Dsig. Aside from the most recent digital sensor value Dsig, FIR filters use a number of previous values equal to the order of the filter. For example, a 7th order filter uses 8 digital sensor values Dsig. There is a time interval between each digital sensor value Dsig. To continue with the example, if the time interval between digital sensor values Dsig is one minute, then the oldest digital sensor value Dsig used in a 7th order FIR filter would be seven minutes old. Therefore, the average time delay for all of the values used in the filter is three and a half minutes. However, if the weighting factors associated with each of the values are not equal then the time delay may be longer or shorter than three and one half minutes depending on the effects of the coefficients.

[**0225**] Preferred embodiments of the invention include a FIR filter that compensates for both the various time delays, of up to about 30 minutes as discussed above, and high frequency noise, greater than about 10 c/hr also discussed above. Particular embodiments employ a 7th order Weiner type FIR filter. The coefficients for the filter are selected to correct for time lags while simultaneously reducing high frequency noise. An example of a frequency response curve **426** is shown in **FIG. 21**. The example frequency response curve **416** is generated for a Weiner filter with a pass band for frequencies from zero up to about 8 c/hr and a stop band for frequencies greater than about 15 c/hr for a sensor with a sensitivity of about 20 μA/100 mg/dl. A study conducted with sensors in dogs demonstrates that a FIR filter may be used to compensate for time delays. During the study a filter was used to compensate for a time delay of about 12 minutes. The results, presented in **FIG. 22**, show dots **428** representing actual blood plasma glucose levels measured with a blood glucose meter, a broken line **430** representing

sensor measurements without delay compensation, and a solid line **432** representing sensor measurements with delay compensation. The sensor in the test was abnormally low in sensitivity. Studies with average sensitivity sensors in humans are indicating a time delay of about 3 to 10 minutes is more normal. Other filter coefficients and other orders of filters may be used to compensate for the time delay and/or noise.

[**0226**] In alternative embodiments, other types of filters may be used as long as they remove a sufficient portion of the noise from the sensor signal. In other alternative embodiments, no time compensation is used if the rate of change in the blood glucose level is slow compared to the time delay. For example a five-minute delay between blood plasma glucose and a sensor measurement does not have to be corrected for a closed loop glucose control system to function.

Derivative Filter

[**0227**] Further embodiments may include a filter to remove noise from the derivative of the sensor signal before the controller uses it. A derivative is taken from the digital sensor values Dsig, which results in digital derivative sensor values (dDsig/dt). The digital derivative sensor values dDsig/dt are passed through a FIR filter. In particular embodiments, the derivative filter is at least a 7th order FIR filter tuned to remove high frequency noise. In alternative embodiments, higher or lower order filters may be used and the filters may be tuned to remove various frequencies of noise. In other alternative embodiments, a derivative is taken from the glucose level error G_E values and then passed through a derivative filter **526**, as shown in **FIG. 37**. In further alternative embodiments, a derivative is taken of an analog sensor signal Isig and a hardware filter is used to remove noise.

Calibration

[**0228**] In preferred embodiments, after filtering, the digital sensor values Dsig are calibrated with respect to one or more glucose reference values. The glucose reference values are entered into the calibrator and compared to the digital sensor values Dsig. The calibrator applies a calibration algorithm to convert the digital sensor values Dsig, which are typically in counts into blood glucose values. In particular embodiments, the calibration method is of the type described in U.S. patent application Ser. No. 09/511,580, filed on Feb. 23, 2000, entitled "GLUCOSE MONITOR CALIBRATION METHODS", which is incorporated by reference herein. In particular embodiments, the calibrator is included as part of the infusion device **34** and the glucose reference values are entered by the user into the infusion device **34**. In other embodiments, the glucose reference values are entered into the telemetered characteristic monitor transmitter **30** and the calibrator calibrates the digital sensor values Dsig and transmits calibrated digital sensor values to the infusion device **34**. In further embodiments, the glucose reference values are entered into a supplemental device where the calibration is executed. In alternative embodiments, a blood glucose meter is in communication with the infusion device **34**, telemetered characteristic monitor transmitter **30** or supplemental device so that glucose reference values may be transmitted directly into the device that the blood glucose meter is in communication with. In additional alternative embodiments, the blood glucose meter is part of the infusion device **34**, telemetered characteristic monitor transmitter **30** or supplemental device such as that shown in U.S. patent application Ser. No. 09/334,996, filed on Jun. 17, 1999, entitled "CHARACTERISTIC MONITOR WITH A CHARACTERISTIC METER AND METHOD OF USING THE SAME", which is incorporated by reference herein.

[**0229**] In preferred embodiments, to obtain blood glucose reference values, one or more blood samples are extracted from the body **20**, and a common, over-the-counter, blood glucose meter is used to measure the blood plasma glucose concentration of the samples. Then a digital sensor value Dsig is compared to the blood glucose measurement from the meter and a mathematical correction is applied to convert the digital sensor values Dsig to blood glucose values. In alternative embodiments, a solution of a known glucose concentration is introduced into the subcutaneous tissue surrounding the sensor **26** by using methods and apparatus such as described in U.S. patent application Ser. No. 09/395,530, filed on Sep. 14, 1999, entitled "METHOD AND KIT FOR SUPPLYING A FLUID TO A CUBCUTANEOUS PLACEMENT SITE", which is incorporated by reference herein, or by using injection, infusion, jet pressure, introduction through a lumen, or the like. A digital sensor value Dsig is collected while the sensor **26** is bathed in the solution of known glucose concentration. A mathematical formula such as a factor, an offset, an equation, or the like, is derived to convert the digital sensor value Dsig to the known glucose concentration. The mathematical formula is then applied to subsequent digital sensors values Dsig to obtain blood glucose values. In alternative embodiments, the digital sensor values Dsig are calibrated before filtering. In additional alternative embodiments, the digital sensor values Dsig are calibrated after pre-filtering and before filtering. In other alternative embodiments, the sensors are calibrated before they are used in the body or do not require calibration at all.

Sensor Signal Processing Systems

[**0230**] Before filtering and calibrating, generally the sensor signal is processed to convert the sensor signal from a raw form into a form acceptable for use in the filters and/or calibrator. In preferred embodiments, as shown in **FIG. 10**, an analog sensor signal Isig is digitally quantified through an A/D converter **68** resulting in digital sensor values Dsig that are transmitted by a transmitter **70** from the telemetered characteristic monitor transmitter **30** to another device. In particular embodiments, the analog sensor signal Isig is an analog current value that is converted to a digital sensor value Dsig in the form of a digital frequency measurement, as shown in **FIG. 11** (*a*). The general circuit includes an integrator **72**, a comparator **74**, a counter **76**, a buffer **78**, a clock **80** and the transmitter **70**. The integrator **72** generates a substantially ramped voltage signal (A), and the instantaneous slope of the ramped voltage signal is proportional to the magnitude of the instantaneous analog sensor signal Isig. The comparator **74** converts the ramped voltage signal (A) from the integrator **72** into square wave pulses (B). Each pulse from the comparator **74** increments the counter **76** and also resets the integrator **72**. The clock **80** periodically triggers the buffer **78** to store the present value from the counter **76** and then resets the counter **76**. The values stored in the buffer **78** are the digital sensor values Dsig. The clock **80** may also periodically signal the transmitter **70** to send a

value from the buffer **78**. In preferred embodiments, the clock period is one minute. However, in alternative embodiments, the clock period may be adjusted based on how often measurements are needed, sensor signal noise, sensor sensitivity, required measurement resolution, the type of signal to be transmitted, or the like. In alternative embodiments, a buffer is not used.

A/D Converters

[**0231**] Various A/D converter designs may be used in embodiments of the present invention. The following examples are illustrative, and not limiting, since other A/D converters may be used.

I to F (Current to Frequency (Counts)), Single Capacitor, Quick Discharge

[**0232**] In preferred embodiments, the integrator **72** consists of a first Op-Amp **92** and a capacitor **82**, shown in **FIG. 12**. The integrator **72** sums the analog sensor signal Isig current by charging the capacitor **82** until the capacitor voltage (A') achieves a high reference voltage (VrefH). The capacitor voltage (A') is measured at the output of the first Op-Amp **92**. A second Op-Amp **94** is used as a comparator. When the capacitor voltage (A') reaches VrefH, the comparator output (B') changes from low to high. The high comparator output (B') closes a reset switch **84** that discharges the capacitor **82** through a voltage source (V+). The high comparator output (B') also triggers a reference voltage switch **88** to close, while substantially simultaneously an inverter **86** inverts the comparator output (B'). And the inverter output (C') triggers a reference voltage switch **90** to open. The result is that the reference voltage of the comparator is changed from VrefH to the low reference voltage (VrefL).

[**0233**] When the capacitor voltage (A') is discharged to VrefL, the comparator output (B') returns to low, thus forming a pulse. The low comparator output (B') opens the reset switch **84** allowing the capacitor **82** to begin charging again.

[**0234**] Virtually simultaneously, the low comparator output (B') also triggers the reference voltage switch **88** to open and the inverter output (C') triggers reference voltage switch **90** to close resulting in changing the comparator reference voltage from VrefL back to VrefH.

I to F, Single Reversible Capacitor

[**0235**] In alternative embodiments, two or more integrator switches are used to control the polarity of one or more capacitors. A particular embodiment is shown in **FIG. 13**. Generally, only one of the two integrator-switches **110** and **112** is closed and the other integrator switch is open. When the first integrator switch **110** is closed, the second integrator switch **112** is open and an integrator Op-Amp **114** sums the analog sensor signal Isig current by charging a capacitor **116** until the capacitor voltage (A") achieves a high reference voltage (VrefH). The comparator **120** compares the integrator output (A") to the reference voltage VrefH. And when the capacitor voltage (A") reaches VrefH, the comparator output (B") shifts from low to high, initiating a pulse.

[**0236**] The high comparator output (B") pulse causes the capacitor polarity to reverse using the following method. The high comparator output (B") triggers the second integrator switch **112** to close while virtually simultaneously the inverter **118** inverts the comparator output (B"). And the low inverter output (C") pulse triggers the first integrator switch **110** to open. Once the capacitor's polarity is reversed, the capacitor **116** discharges at a rate proportional to the analog sensor signal Isig. The high comparator output (B") pulse also triggers the reference voltage of the comparator to change from VrefH the low reference voltage (VrefL). When the capacitor voltage (A") is discharged to VrefL, the comparator output (B") returns to low. The low comparator output (B") opens the second integrator switch **112** and virtually simultaneously the high inverter output (C") closes the first integrator switch **110** allowing the capacitor **116** to begin charging again. The low comparator output (B") also triggers the comparator reference voltage to change from VrefL back to VrefH.

[**0237**] An advantage of this embodiment is that sensor signal errors, which may be created due to capacitor discharge time, are reduced since the magnitude of the analog sensor signal Isig drives both the charging and the discharging rates of the capacitor **1116**.

I to F, Dual Capacitor

[**0238**] In further alternative embodiments, more than one capacitor is used such that as one capacitor is charging, at a rate proportional to the magnitude of the analog sensor signal Isig, another capacitor is discharging. An example of this embodiment is shown in **FIG. 14**. A series of three switches are used for each capacitor. A first group of switches **210** is controlled by a latch voltage C'", and a second group of switches **212** are controlled by voltage D'", which is the inverse of C'". Substantially, only one group of switches is closed at a time. When the first group of switches **210** is closed, the voltage across a first capacitor **216** increases at a rate proportional to the analog sensor signal Isig until the integrator voltage (A'") at the output of Op-Amp **214** achieves a reference voltage (Vref). At the same time one of the switches shorts the circuit across a second capacitor **222** causing it to discharge. A comparator **220** compares the integrator output (A'") to the reference voltage Vref. And when the integrator output (A'") reaches Vref the comparator output (B'") generates a pulse. The comparator output pulse increments a counter **76**, and triggers the latch output voltage C'" from a latch **221** to toggle from a low voltage to a high voltage. The change in the latch voltage C'" causes the second group of switches **212** to close and the first group of switches **210** to open. One of the switches from the second group of switches **212** shorts the circuit across the first capacitor **216** causing it to discharge. At the same time the voltage across the second capacitor **222** increases at a rate proportional to the analog sensor signal Isig until the integrator voltage (A'") at the output of Op-Amp **214** achieves a reference voltage (Vref). Again, the comparator **220** compares the integrator output (A'") to the reference voltage Vref. And when the integrator output (A'") reaches Vref, the comparator output (B'") generates a pulse. The comparator output pulse increments the counter **76**, and triggers the latch output voltage C'" to toggle from a high voltage to a low voltage, which causes the switches to return to their initial position with the first group of switches **210** closed and the second group of switches **212** to open.

[**0239**] In summary, as the blood glucose level **18** increases, the analog sensor signal Isig increases, which causes the voltage coming out of the integrator **72** to ramp

up faster to the high reference voltage VrefH, which causes the comparator **74** to generate pulses more often, which adds counts to the counter **76** faster. Therefore, higher blood glucose levels generate more counts per minute.

[**0240**] The charge storage capacity for the capacitors used in the integrator **72**, and the reference voltages VrefH, and VrefL are selected such that the count resolution for counts collected in a one-minute period at a glucose level of 200 mg/dl represents a blood glucose measurement error of less than 1 mg/dl. In particular embodiments, VrefH is 1.1 volts and VrefL is 0.1 volts. Higher or lower reference voltages may be selected based on the magnitude of the analog sensor signal Isig, the capacity of the capacitors, and the desired measurement resolution. The source voltage V+ is set to a voltage sufficiently high to discharge one or more capacitors quickly enough that the discharge times do not significantly reduce the number of counts per minute at a blood glucose level of 200 mg/dl.

Pulse Duration Output Feature

[**0241**] In preferred embodiments, the transmitter **70** transmits the digital sensor values Dsig from the buffer **78** whenever triggered by the clock **80**. However, in particular embodiments, the user or another individual may use a selector **96** to choose other outputs to be transmitted from the transmitter **70**, as shown in **FIG. 11** (*b*). In preferred embodiments, the selector **96** is in the form of a menu displayed on a screen that is accessed by the user or another individual by using buttons on the surface of the telemetered characteristic monitor transmitter **30**. In other embodiments, a dial selector, dedicated buttons, a touch screen, a signal transmitted to the telemetered characteristic monitor transmitter **30**, or the like, may be used. Signals that may be selected to be transmitted, other than the digital sensor values Dsig, include, but are not limited to, a single pulse duration, digital sensor values before pre-filtering, digital sensor values after pre-filtering but before filtering, digital sensor values after filtering, or the like.

[**0242**] In particular embodiments, a pulse duration counter **98** counts clock pulses from a pulse duration clock **100** until the pulse duration counter **98** is reset by a rising or falling edge of a pulse from the comparator **74**, as shown in **FIG. 11** (*b*). The accumulated count at the time that the pulse duration counter **98** is reset represents the pulse duration for a portion of a single pulse from the comparator **74**. The accumulated count from the pulse duration counter **98** is stored in the single pulse buffer **102** when triggered by the reset signal. When an individual selects the single pulse output, the transmitter **70** transmits the values from the single pulse buffer **102**. The pulse duration clock **100** period must be sufficiently shorter than the period between individual pulse edges from the comparator **74** given a high analog sensor signal Isig to have sufficient resolution to quantify different pulse durations from the comparator **74**.

I to V (Current to Voltage), Voltage A/D

[**0243**] Alternative methods may be used to convert the analog sensor signal Isig from an analog current signal to a digital voltage signal. The analog sensor signal Isig is converted to an analog voltage Vsig using an Op Amp **302** and a resistor **304**, as shown in **FIG. 15**. And then periodically a clock **308** triggers an A/D converter **306** to take a sample value from the analog voltage Vsig and convert it to a digital signal representing the magnitude of the voltage. The output values of the A/D converter **306** are digital sensor values Dsig. The digital sensor values Dsig are sent to a buffer **310** and then to the transmitter **70**. In particular embodiments, the resistor **304** may be adjusted to scale the Vsig to use a significant portion of the range of the voltage A/D converter **306** depending on the sensor sensitivity, the maximum glucose concentration to be measured, the desired resolution from the voltage A/D converter **306**, or the like.

[**0244**] In alternative embodiments, a buffer **310** is not needed and the digital sensor values Dsig are sent from the A/D converter directly to the transmitter **70**. In other alternative embodiments, the digital sensor values Dsig are processed, filtered, modified, analyzed, smoothed, combined, averaged, clipped, scaled, calibrated, or the like, before being sent to the transmitter **70**. In preferred embodiments, the clock **308** triggers a measurement every 10 seconds. In alternative embodiments, the clock **308** runs faster or slower triggering measurements more or less frequently depending on how quickly the blood glucose level can change, the sensor sensitivity, how often new measurements are needed to control the delivery system **14**, or the like.

[**0245**] Finally, in other alternative embodiments, other sensor signals from other types of sensors, as discussed in the section "Sensor and Sensor Set" below, are converted to digital sensor values Dsig if necessary before transmitting the digital sensor values Dsig to another device.

Additional Controller Inputs

[**0246**] Generally, the proportional plus, integral plus, derivative (PID) insulin response controller uses only glucose (digital sensor values Dsig) as an input. Conversely, in a normally glucose tolerant human body, healthy β-cells benefit from additional inputs such as neural stimulation, gut hormone stimulation, changes in free fatty acid (FFA) and protein stimulation etc. Thus in other alternative embodiments, the PID controller, as discussed above, can be augmented with one or more additional inputs. In particular alternative embodiments, the user may manually input supplemental information such as a start of a meal, an anticipated carbohydrate content of the meal, a start of a sleep cycle, an anticipated sleep duration, a start of an exercise period, an anticipated exercise duration, an exercise intensity estimation, or the like. Then, a model predictive control feature assists the controller to use the supplemental information to anticipate changes in glucose concentration and modify the output commands accordingly. For example, in a NGT individual, neural stimulation triggers the β-cells to begin to secrete insulin into the blood stream before a meal begins, which is well before the blood glucose concentration begins to rise. So, in alternative embodiments, the user can tell the controller that a meal is beginning and the controller will begin to secrete insulin in anticipation of the meal.

[**0247**] In other alternative embodiments, the user or another individual may manually override the control system or select a different controller algorithm. For instance, in particular alternative embodiments, an individual may select to normalize to a basal glucose level immediately, and instead of using the β-cell emulating PID controller another controller would take over such as a PID controller with different gains, a PD controller for rapid glucose adjustment,

or the like. Additional alternative embodiments allow an individual to turn off the integral component of the PID controller once the glucose level is normalized and no meals are anticipated. In other particular alternative embodiments, the user may select to turn off the controller entirely, therefore disengaging the closed loop system. Once the closed loop system is not controlling insulin dosing, the user may program the infusion device with a basal rate, variable basal rates, boluses, or the like, or the user may manually enter each individual dosage when it is needed.

[0248] In still other alternative embodiments, more than one body characteristic is measured, and the measurements are provided as inputs to a controller. Measured body characteristics that may be used by the controller include, but are not limited to, the blood glucose level, blood and/or ISF pH, body temperature, the concentration of amino acids in blood (including arginine and/or lysine, and the like), the concentration of gastrointestinal hormones in blood or ISF (including gastrin, secretin, cholecystokinin, and/or gastro inhibitory peptide, and the like), the concentration of other hormones in blood or ISF (including glucagons, growth hormone, cortisol, progesterone and/or estrogen, and the like), blood pressure, body motion, respiratory rate, heart rate, and other parameters.

[0249] In NGT individuals, the glucose-induced secretion of insulin by healthy β-cells may be as much as doubled in the presence of excess amino acids. Yet, the presence of excess amino acids alone, without elevated blood glucose, only mildly increases insulin secretions according to the *Textbook of Medical Physiology*, Eighth Edition, written by Arthur C. Guyton, published by W. B. Saunders Company, 1991, Ch. 78, pg. 861, section "Other Factors That Stimulate Insulin Secretion". In particular alternative embodiments, amino acid concentrations are estimated or measured, and the controller's insulin response increases when amino acid concentrations are sufficiently high.

[0250] In NGT individuals, the presence of sufficient quantities of gastrointestinal hormones in the blood causes an anticipatory increase in blood insulin, which suggests that β-cells release insulin before increases in blood glucose due to an individual's anticipation of a meal. In particular alternative embodiments, the concentration of gastrointestinal hormones is measured or estimated, and when concentrations are high enough to indicate that a meal is anticipated, the controller commands are adjusted to cause insulin introduction into the body even before the blood glucose level changes. In other alternative embodiments, the controller uses measurements or estimates of other hormones to modify the rate of insulin secretion.

[0251] In NGT individuals, the body's cells take up glucose during periods of heavy exercise with significantly lower levels of insulin. In alternative embodiments, physiologic parameters such as body motion, blood pressure, pulse rate, respiratory rate, or the like, are used to detect periods of heavy exercise by the body and therefore provide inputs to the controller that decreases (or eliminates) the amount of insulin infused into the body to compensate for glucose concentrations.

Sensor Compensation and End-of-Life Detection

[0252] In particular embodiments, the sensor sensitivity **510** may degrade over time, as shown in **FIG. 31** (*b*). As the sensor sensitivity **510** changes the sensor signal accuracy degrades. If the sensor sensitivity **510** changes significantly then the sensor must be recalibrated or replaced. A diagnostic signal may be used to evaluate whether sensor signal accuracy has changed and/or may be used to adjust the signal or to indicate when to recalibrate or replace the sensor. As the sensor sensitivity **510** decreases, the measured glucose level **512** using the sensor signal underestimates the actual blood glucose level **514**, and the measurement error **516** between the measured glucose level **512** and the actual blood glucose level **514** becomes greater over time, as shown in **FIG. 31** (*a*). The sensor sensitivity **510** decreases due to increases in sensor resistance. Rs, as shown in **FIG. 31** (*c*). The sensor resistance Rs is the resistance provided by the body between the working electrode WRK and the counter electrode CNT, shown as the sum or R**1** and R**2** in the circuit diagram of **FIG. 7**. The sensor resistance Rs can be obtained indirectly by measuring the analog sensor signal Isig and the counter electrode voltage Vcnt and then calculating the resistance,

$$Rs=Vcnt/Isig.$$

As the sensor resistance Rs increases, the analog sensor signal Isig response to a given glucose concentration decreases. In preferred embodiments, the decrease in the analog sensor signal Isig may be compensated for by identifying the amount that the sensor resistance Rs has changed since the last calibration and then using the change in resistance in a correction algorithm **454** to adjust the analog sensor signal value. A compensation value calculated by the correction algorithm **454** is used to increase the sensor analog signal value. The compensation value increases over time as the sensor resistance Rs increases. The correction algorithm **454** includes at least one value that varies with changes in sensor resistance Rs. In particular embodiments, a low pass filter is applied to the sensor resistance Rs measurement to decrease high frequency noise before evaluating how much the sensor resistance Rs has changed since the last calibration.

[0253] In alternative embodiments, the sensor resistance Rs may be calculated using different equations. For instance, a sensor resistance Rs_2 may be calculated as:

$$Rs_2=(V_0-Vcnt)/Isig$$

In particular embodiments, V_0 is the same voltage as Vset. An advantage of this approach is that it accounts for the voltage level Vset, which can vary from sensor to sensor and/or monitor to monitor, and/or as the analog sensor signal changes. This removes the noise and/or offset associated with variations in Vset, and can provide a more accurate indication of sensor resistance. In other particular embodiments, V_0 is set at −0.535 volts, which is a commonly used voltage for Vset. In further embodiments, V_0 is calculated from paired measurements of Vcnt and Isig. Using least squares or another curve fitting method, a mathematical equation representing the curve (typically a straight line equation) is derived from the relationship between Vcnt and Isig. Then, V_0 is obtained by extrapolating the curve to find the value for Vcnt when Isig is zero. FIGS. **38** (*a-h*) show a comparison between calculating the sensor resistance with V_0 and without V_0. The plot of the derivative of Rs_2 shown in **FIG. 38** (*g*) is cleaner and indicates the sensor failure more clearly than the plot of the derivative of Rs shown in

FIG. 38 (*f*). Hence sensor resistance Rs_2 may be used instead of, or in conjunction with, sensor resistance Rs described above.

[**0254**] In preferred embodiments, the sensor is recalibrated or replaced when the change in the sensor resistance Rs since the last calibration exceeds a threshold, or the rate of change of the sensor resistance dRs/dt exceeds another threshold. In particular embodiments, the rate of change of the sensor resistance dRs/dt may be compared to two thresholds as shown in **FIG. 32**. If dRs/dt exceeds a 'replacement' threshold then a warning is provided to the user to replace the sensor. If dRs/dt exceeds a 'recalibrate' threshold then a warning is provided to the user to recalibrate the sensor.

[**0255**] In an example shown in FIGS. **33** (*a-c*), the analog sensor signal Isig decreases dramatically at approximately 0.3 days, as seen in **FIG. 33** (*a*). Given only the analog sensor signal Isig, the user would believe that the decrease in the analog sensor signal Isig is due to a decrease in blood glucose. But in reality the drop in the analog sensor signal Isig is due to a sudden change in sensor sensitivity. The sensor resistance Rs, shown in **FIG. 33** (*b*) increases as the analog sensor signal Isig drops at about 0.3 days. The derivative of the sensor resistance dRs/dt, shown in **FIG. 33** (*c*), clearly shows a spike **522** at about 0.3 days when the analog sensor signal Isig dropped. The spike **522** in the change in sensor resistance dRs/dt indicates a sensor anomaly rather than a realistic drop in blood glucose. If a threshold were placed at +/−4 on the dRs/dt, the user would have received a warning to replace the sensor at about 0.3 days. As seen in **FIG. 33** (*a*), the sensor was not replaced until about 1.4 days. The analog sensor signal Isig was under estimating the true glucose level from about 0.3 days until the sensor was replaced at about 1.4 days.

[**0256**] In particular embodiments, the amount of time dt over which the derivative of the sensor resistance Rs is taken is the entire time since the last calibration. In other embodiments, the amount of time dt over which the derivative is taken is fixed, for example over the last hour, 90 minutes, 2 hours, or the like.

[**0257**] In alternative embodiments, the sensor is recalibrated or replaced when the integral of the sensor resistance Rs over a predetermined time window (∫ Rs d/dt) exceeds a predetermined resistance integral threshold. An advantage to this approach is that it tends to filter out potential noise that could be encountered from a signal that includes occasional spikes, sudden variations in voltage levels, or the like. Preferably, the integral of the sensor resistance Rs is calculated over a time window (such as 15 minutes, or the like) based on Rs measurements obtained at set rates (such as 1 minutes 5 minutes, or the like) during the time window. In alternative embodiments, the time windows may be longer or shorter and different sampling rates may be used, with the selection being dependent on noise, response of the system, sampling rate used in the controller, or the like. In further embodiments, the time windows and sampling rates may change over time, such as when approaching the end of the expected sensor life, or as the equations indicate that the sensor is degrading, or the like.

[**0258**] Like above, multiple thresholds may be used. For instance, if ∫ Rs d/dt exceeds a 'replacement' threshold then a warning is provided to the user to replace the sensor. And if ∫ Rs d/dt exceeds a 'recalibrate' threshold then a warning is provided to the user to recalibrate the sensor. In further alternative embodiments, the counter electrode voltage Vcnt is used to evaluate other characteristics such as, sensor accuracy, sensor bio-fouling, sensor function, sensor voltage operating range, sensor attachment, or the like.

pH Controller Input

[**0259**] In alternative embodiments, the controller uses measurements of both the interstitial fluid (ISF) glucose level and a local pH in the ISF surrounding the sensor to generate commands for the infusion device. In particular alternative embodiments, a single multi-sensor **508** located in the subcutaneous tissue is used to measure both the glucose level and the pH. The tip of the multi-sensor **508** that is placed into the subcutaneous tissue with three electrodes is shown in **FIG. 30**. The working electrode **502** is plated with platinum black and coated with glucose oxidase (GOX). The reference electrode **506** is coated with silver-silver chloride. And the counter electrode **504** is coated with iridium oxide (Ir Ox). The analog sensor signal Isig is generated at the working electrode **502** due to the reaction between glucose oxidase GOX and the ISF glucose as described with the preferred sensor embodiment. In this alternative embodiment however, as glucose in the ISF reacts with the glucose oxidase GOX on the working electrode and gluconic acid is generated, the local pH in the ISF surrounding the sensor decreases, which changes the potential of the iridium oxide on the counter electrode **504**, with respect to the reference electrode REF. So, as the pH decreases, the voltage at the counter electrode **504** increases. Therefore, as the glucose concentration increases, the local pH decreases, which causes the counter electrode voltage to increase. So, the glucose concentration may be estimated based on the counter electrode voltage. The counter electrode voltage estimate of glucose concentration can be compared to the estimate of glucose level from the analog sensor signal Isig. The two estimates of the glucose level may be combined by a weighted average or one estimate may simply be used as a check to verify that the other sensing method is functioning properly. For example, if the difference between the two estimates is 10% for a period of time and then suddenly the difference increased to 50%, a warning would be issued indicating to the user that the sensor may need to be replaced or recalibrated.

[**0260**] In additional alternative embodiments, the pH level near the sensor may be used to detect infection. By tracking trends in the pH over time, a dramatic change in pH may be used to identify that an infection has developed in proximity to the sensor. A warning is used to notify the user to replace the sensor.

[**0261**] The pH sensor may be used in other embodiments. When insulin is not available to assist the body to use glucose, the body shifts to consuming fat for energy. As the body shifts from using glucose to using almost exclusively fat for energy, concentrations of keto acids (acetoacetic acid and β-hydroxybutyric acid) increase from about 1 mEq/liter to as high as 10 mEq/liter. In particular alternative embodiments, the pH level is measured to detect increases in keto acids in the body. In embodiments of the present invention, a warning is provided to the user when the ISF pH level is too low.

[**0262**] A side effect of the increased of keto acid concentrations is that sodium is drawn from the body's extra

cellular fluid to combine with the acids so that the body can excrete the acids. This leads to increased quantities of hydrogen ions, which greatly increases the acidosis. Severe cases lead to rapid deep breathing, acidotic coma and even death. In other alternative embodiments, an ion-selective electrode (ISE) is used to detect changes in sodium concentration. A special membrane is used to coat the ISE so that it only senses changes in sodium concentration. In particular alternative embodiments, the ISE is a fourth electrode added to the glucose sensor. In another alternative embodiment, a three-elect-ode system is used with a silver-silver chloride reference electrode REF, an Ir Ox counter electrode CNT, and a sodium ion-selective (Na ISE) working electrode WRK.

[0263] While pH measurements, end-of-life measurements, hormone measurements, or the like, add inputs to the controller that can significantly affect the accuracy of insulin delivery, the basic input to the controller is generally a glucose measurement. The glucose measurement is provided by the sensor system. And once the controller uses the glucose measurement to generate commands, the delivery system executes the commands. The following is a detailed description of several apparatus embodiments for the sensor system and the delivery system.

Sensor System

[0264] The sensor system provides the glucose measurements used by the controller. The sensor system includes a sensor, a sensor set to hold the sensor if needed, a telemetered characteristic monitor transmitter, and a cable if needed to carry power and/or the sensor signal between the sensor and the telemetered characteristic monitor transmitter.

Sensor and Sensor Set

[0265] In preferred embodiments, the glucose sensor system **10** includes a thin film electrochemical sensor such as the type disclosed in U.S. Pat. No. 5,391,250, entitled "METHOD OF FABRICATING THIN FILM SENSORS"; U.S. patent application Ser. No. 09/502,204, filed on Feb. 10, 2000, entitled "IMPROVED ANALYTE SENSOR AND METHOD OF MAKING THE SAME"; or other typical thin film sensors such as described in commonly assigned U.S. Pat. Nos. 5,390,671; 5,482,473; and 5,586,553 which are incorporated by reference herein. See also U.S. Pat. No. 5,299,571.

[0266] The glucose sensor system **10** also includes a sensor set **28** to support the sensor **26** such as described in U.S. Pat. No. 5,586,553, entitled "TRANSCUTANEOUS SENSOR INSERTION SET" (published as PCT Application WO 96/25088); and U.S. Pat. No. 5,954,643, entitled "INSERTION SET FOR A TRANSCUTANEOUS SENSOR" (published as PCT Application WO 98/56293); and U.S. Pat. No. 5,951,521, entitled "A SUBCUTANEOUS IMPLANTABLE SENSOR SET HAVING THE CAPABILITY TO REMOVE OR DELIVER FLUIDS TO AN INSERTION SITE", which are incorporated by reference herein.

[0267] In preferred embodiments, the sensor **26** is inserted through the user's skin **46** using an insertion needle **58**, which is removed and disposed of once the sensor is positioned in the subcutaneous tissue **44**. The insertion needle **58** has a sharpened tip **59** and an open slot **60** to hold the sensor during insertion into the skin **46**, as shown in FIGS. **3** (*c*) and (*d*) and **FIG. 4**. Further description of the needle **58** and the sensor set **28** are found in U.S. Pat. No. 5,586,553, entitled "TRANSCUTANEOUS SENSOR INSERTION SET" (published as PCT Application WO 96/25088); and U.S. Pat. No. 5,954,643, entitled "INSERTION SET FOR A TRANSCUTANEOUS SENSOR" (published as PCT Application WO 98/5629), which are incorporated by reference herein.

[0268] In preferred embodiments, the sensor **26** has three electrodes **42** that are exposed to the interstitial fluid (ISF) in the subcutaneous tissue **44** as shown in FIGS. **3** (*d*) and **4**. A working electrode WRK, a reference electrode REF and a counter electrode CNT are used to form a circuit, as shown in **FIG. 7**. When an appropriate voltage is supplied across the working electrode WRK and the reference electrode REF, the ISF provides impedance (R**1** and R**2**) between the electrodes **42**. And an analog current signal Isig flows from the working electrode WRK through the body (R**1** and R**2**, which sum to Rs) and to the counter electrode CNT. Preferably, the working electrode WRK is plated with platinum black and coated with glucose oxidase (GOX), the reference electrode REF is coated with silver-silver chloride, and the counter electrode is plated with platinum black. The voltage at the working electrode WRK is generally held to ground, and the voltage at the reference electrode REF is substantially held at a set voltage Vset. Vset is between 300 and 700 mV, and preferably to about 535 mV.

[0269] The most prominent reaction stimulated by the voltage difference between the electrodes is the reduction of glucose as it first reacts with GOX to generate gluconic acid and hydrogen peroxide (H_2O_2). Then the H_2O_2 is reduced to water (H_2O) and (O^-) at the surface of the working electrode WRK. The O^- draws a positive charge from the sensor electrical components, thus repelling an electron and causing an electrical current flow. This results in the analog current signal Isig being proportional to the concentration of glucose in the ISF that is in contact with the sensor electrodes **42**. The analog current signal Isig flows from the working electrode WRK, to the counter electrode CNT, typically through a filter and back to the low rail of an op-amp **66**. An input to the op-amp **66** is the set voltage Vset. The output of the op-amp **66** adjusts the counter voltage Vcnt at the counter electrode CNT as Isig changes with glucose concentration. The voltage at the working electrode WRK is generally held to ground, the voltage at the reference electrode REF is generally equal to Vset, and the voltage Vcnt at the counter electrode CNT varies as needed.

[0270] In alternative embodiments, more than one sensor is used to measure blood glucose. In particular embodiments, redundant sensors are used. The user is notified when a sensor fails by the telemetered characteristic monitor transmitter electronics. An indicator may also inform the user of which sensors are still functioning and/or the number of sensors still functioning. In other particular embodiments, sensor signals are combined through averaging or other means. If the difference between the sensor signals exceeds a threshold then the user is warned to recalibrate or replace at least one sensor. In other alternative embodiments, more than one glucose sensor is used, and the glucose sensors are not of the same design. For example, an internal glucose sensor and an external glucose sensor may be used to measure blood glucose at the same time.

[0271] In alternative embodiments, other continuous blood glucose sensors and sensor sets may be used. In particular alternative embodiments, the sensor system is a micro needle analyte sampling device such as described in U.S. patent application Ser. No. 09/460,121, filed on Dec. 13, 1999, entitled "INSERTION SET WITH MICROPIERCING MEMBERS AND METHODS OF USING THE SAME", incorporated by reference herein, or an internal glucose sensor as described in U.S. Pat. Nos. 5,497,772; 5,660,163; 5,791,344; and 5,569,186, and/or a glucose sensor that uses florescence such as described in U.S. Pat. No. 6,011,984 all of which are incorporated by reference herein. In other alternative embodiments, the sensor system uses other sensing technologies such as described in Patent Cooperation Treaty publication No. WO 99/29230, light beams, conductivity, jet sampling, micro dialysis, micro-poration, ultra sonic sampling, reverse iontophoresis, or the like. In still other alternative embodiments, only the working electrode WRK is located in the subcutaneous tissue and in contact with the ISF, and the counter CNT and reference REF electrodes are located external to the body and in contact with the skin. In particular embodiments, the counter electrode CNT and the reference electrode REF are located on the surface of a monitor housing **518** and are held to the skin as part of the telemetered characteristic monitor, as shown in **FIG. 34** (*a*). In other particular embodiments, the counter electrode CNT and the reference electrode REF are held to the skin using other devices such as running a wire to the electrodes and taping the electrodes to the skin, incorporating the electrodes on the underside of a watch touching the skin, or the like. In more alternative embodiments, more than one working electrode WRK is placed into the subcutaneous tissue for redundancy. In additional alternative embodiments, a counter electrode is not used, a reference electrode REF is located outside of the body in contact with the skin, and one or more working electrodes WRK are located in the ISF. An example of this embodiment implemented by locating the reference electrode REF on a monitor housing **520** is shown in **FIG. 34** (*b*). In other embodiments, ISF is harvested from the body of an individual and flowed over an external sensor that is not implanted in the body.

Sensor Cable

[0272] In preferred embodiments, the sensor cable **32** is of the type described in U.S. Patent Application Ser. No. 60/121,656, filed on Feb. 25, 1999, entitled "TEST PLUG AND CABLE FOR A GLUCOSE MONITOR", which is incorporated by reference herein. In other embodiments, other cables may be used such as shielded, low noise cables for carrying nA currents, fiber optic cables, or the like. In alternative embodiments, a short cable may be used or the sensor may be directly connected to a device without the need of a cable.

Telemetered Characteristic Monitor Transmitter

[0273] In preferred embodiments, the telemetered characteristic monitor transmitter **30** is of the type described in U.S. patent application Ser. No. 09/465,715, filed on Dec. 17, 1999, entitled "TELEMETERED CHARACTERISTIC MONITOR SYSTEM AND METHOD OF USING THE SAME" (published as PCT Application WO 00/19887 and entitled. "TELEMETERED CHARACTERISTIC MONITOR SYSTEM"), which is incorporated by reference herein, and is connected to the sensor set **28** as shown in FIGS. **3** (*a*) and (*b*).

[0274] In alternative embodiments, the sensor cable **32** is connected directly to the infusion device housing, as shown in **FIG. 8** (*a*), which eliminates the need for a telemetered characteristic monitor transmitter **30**. The infusion device contains a power supply and electrical components to operate the sensor **26** and store sensor signal values.

[0275] In other alternative embodiments, the telemetered characteristic monitor transmitter includes a receiver to receive updates or requests for additional sensor data or to receive a confirmation (a hand-shake signal) indicating that information has been received correctly. Specifically, if the telemetered characteristic monitor transmitter does not receive a confirmation signal from the infusion device, then it re-sends the information. In particular alternative embodiments, the infusion device anticipates receiving blood glucose values or other information on a periodic basis. If the expected information is not supplied when required, the infusion device sends a 'wake-up' signal to the telemetered characteristic monitor transmitter to cause it to re-send the information.

Insulin Delivery System

Infusion device

[0276] Once a sensor signal **16** is received and processed through the controller **12**, commands **22** are generated to operate the infusion device **34**. In preferred embodiments, semi-automated medication infusion devices of the external type are used, as generally described in U.S. Pat. Nos. 4,562,751; 4,678,408; 4,685,903; and U.S. patent application Ser. No. 09/334,858, filed on Jun. 17, 1999, entitled "EXTERNAL INFUSION DEVICE WITH REMOTE PROGRAMMING, BOLUS ESTIMATOR AND/OR VIBRATION CAPABILITIES" (published as PCT application WO 00/10628), which are herein incorporated by reference. In alternative embodiments, automated implantable medication infusion devices, as generally described in U.S. Pat. Nos. 4,373,527 and 4,573,994, are used, which are incorporated by reference herein.

Insulin

[0277] In preferred embodiments, the infusion device reservoir **50** contains Humalog® lispro insulin to be infused into the body **20**. Alternatively, other forms of insulin may be used such as Humalin®, human insulin, bovine insulin, porcine insulin, analogs, or other insulins such as insulin types described in U.S. Pat. No. 5,807,315, entitled "METHOD AND COMPOSITIONS FOR THE DELIVERY OF MONOMERIC PROTEINS", and U.S. Patent Application Ser. No. 60/177,897, filed on Jan. 24, 2000, entitled "MIXED BUFFER SYSTEM FOR STABILIZING POLYPEPTIDE FORUMLATIONS", which are incorporated by reference herein, or the like. In further alternative embodiments, other components are added to the insulin such as polypeptides described in U.S. patent application Ser. No. 09/334,676, filed on Jun. 25, 1999, entitled "MULTIPLE AGENT DIABETES THERAPY", small molecule insulin mimetic materials such as described in U.S. patent application Ser. No. 09/566,877, filed on May 8, 2000, entitled "DEVICE AND METHOD FOR INFUSION OF

SMALL MOLECULE INSULIN MIMETIC MATERIALS", both of which are incorporated by reference herein, or the like.

Infusion Tube

[0278] In preferred embodiments, an infusion tube **36** is used to carry the insulin **24** from the infusion device **34** to the infusion set **38**. In alternative embodiments, the infusion tube carries the insulin **24** from infusion device **34** directly into the body **20**. In further alternative embodiments, no infusion tube is needed, for example if the infusion device is attached directly to the skin and the insulin **24** flows from the infusion device, through a cannula or needle directly into the body. In other alternative embodiments, the infusion device is internal to the body and an infusion tube may or may not be used to carry insulin away from the infusion device location.

Infusion Set

[0279] In preferred embodiments, the infusion set **38** is of the type described in U.S. Pat. No. 4,755,173, entitled "SOFT CANNULA SUBCUTANEOUS INJECTION SET", which is incorporated by reference herein. In alternative embodiments, other infusion sets, such as the Rapid set from Desetronic, the Silhouette from MiniMed, or the like, may be used. In further alternative embodiments, no infusion set is required, for example if the infusion device is an internal infusion device or if the infusion device is attached directly to the skin.

Configurations with Supplemental Devices

[0280] In further alternative embodiments, the pre-filter, filters, calibrator and/or controller **12** are located in a supplemental device that is in communication with both the telemetered characteristic monitor transmitter **30** and the infusion device **34**. Examples of supplemental devices include, a hand held personal digital assistant such as described in U.S. patent application Ser. No. 09/487,423, filed on Jan. 20, 2000, entitled "HANDHELD PERSONAL DATA ASSISTANT (PDA) WITH A MEDICAL DEVICE AND METHOD OF USING THE SAME", which is incorporated by reference herein, a computer, a module that may be attached to the telemetered characteristic monitor transmitter **30**, a module that may be attached to the infusion device **34**, a RF programmer such as described in U.S. patent application Ser. No. 09/334,858, filed on Jun. 17, 1999, entitled EXTERNAL INFUSION DEVICE WITH REMOTE PROGRAMMING, BOLUS ESTIMATOR AND/OR VIBRATION CAPABILITIES (published as PCT application WO 00/10628), which is incorporated by reference herein, or the like. In particular embodiments, the supplemental device includes a post-calibration filter, a display, a recorder, and/or a blood glucose meter. In further alternative embodiments, the supplemental device includes a method for a user to add or modify information to be communicated to the infusion device **34** and/or the telemetered characteristic monitor transmitter **30** such as buttons, a keyboard, a touch screen, and the like.

[0281] In particular alternative embodiments, the supplemental device is a computer in combination with an analyte monitor and a RF programmer. The analyte monitor receives RF signals from the telemetered characteristic monitor transmitter **30**, stores the signals and down loads them to a computer when needed. The RF programmer sends control signals to the infusion device **34** to reprogram the rate of insulin infusion. Both the analyte monitor and the RF programmer are placed into separate communication stations. The communication stations include IR transmitters and IR receivers to communicate with the analyte monitor and the RF programmer. The sensor signal values are transmitted via the telemetered characteristic monitor transmitter **30** to the analyte monitor located in one of the communication stations. Then the sensor signal values are communicated through the IR receiver in a first communication station and to the computer. The computer processes the sensor signal values through one or more filters, calibrators, and controllers to generate commands **22**. The commands are sent to a second communication station and sent to an RF programmer by the IR transmitter in the communication station. Finally the RF programmer transmits the commands **22** to the infusion device **34**. The communication station, analyte monitor and infusion device **34** may be of the type described in U.S. patent application Ser. No. 09/409,014, filed on Sep. 29, 1999 entitled COMMUNICATION STATION FOR INTERFACING WITH AN INFUSION PUMP, ANALYTE MONITOR, ANALYTE METER OR THE LIKE (published as a PCT application WO 00/18449), which is incorporated by reference herein. Alternatively, the RF programmer may be omitted and the infusion device may be placed in a communication station, or the infusion device may receive the commands without the use of an RF programmer and/or a communication station.

[0282] While the description above refers to particular embodiments of the present invention, it will be understood that many modifications may be made without departing from the spirit thereof. The accompanying claims are intended to cover such modifications as would fall within the true scope and spirit of the present invention.

[0283] The presently disclosed embodiments are therefore to be considered in all respects as illustrative and not restrictive, the scope of the invention being indicated by the appended claims, rather than the foregoing description, and all changes which come within the meaning and range of equivalency of the claims are therefore intended to be embraced therein.

1.-**16**. (canceled)

17. A system for infusing a fluid into a body of a user, the system comprising:

means for obtaining a blood glucose concentration of the user;

means for generating a controller input based on the blood glucose concentration;

means for generating commands by a proportional plus, integral plus, derivative (PID) controller from the controller input using at least one preset controller gain; and

means for infusing a liquid based on the commands from the PID controller.

18. The system according to claim 17, wherein the blood glucose concentration is obtained through an IV catheter connected to the body of the user.

19. The system, according to claim 18, wherein a vascular sensor is inserted through the IV catheter to be in contact with the blood and obtain the blood glucose concentration of the user.

20. The system according to claim 18, wherein an automatic blood withdrawal system is used to obtain the blood glucose concentration of the user.

21. The system according to claim 17, wherein the blood glucose concentration is obtained through a subcutaneous sensor in contact with interstitial fluid.

22. The system according to claim 17, wherein the blood glucose concentration is obtained by using a blood glucose meter.

23. The system according to claim 17, wherein the liquid is infused through an IV catheter connected to the body of the user.

24. The system according to claim 17, wherein the at least one preset controller gain is selected such that the commands generated by the PID controller infuses insulin into the body of the user in response to a glucose concentration at a rate similar to the rate that beta cells would release insulin in an individual with a healthy normally functioning pancreas.

25. The system according to claim 24, wherein the at least one preset controller gain is selected by a method that includes the step of measuring an insulin response of at least one individual with a healthy normally functioning pancreas and calculating the at least one controller gain that causes the commands to generally match the insulin response of the at least one individual.

26. The system according to claim 24, wherein the at least one preset controller gain includes at least one tuning parameter that further modifies the commands generated by the PID controller to create an insulin concentration profile that more closely resembles the insulin concentration profile that would be generated by the release of insulin by beta cells in an individual with a healthy normally functioning pancreas.

27. The system according to claim 26, wherein the at least one tuning parameter is an integrator leak.

28. The system according to claim 26, wherein the at least one tuning parameter is a lead/lag compensator.

29. The system according to claim 26, wherein the at least one tuning parameter is an integrator clip.

30. The system according to claim 26, wherein the at least one tuning parameter is a feedback of predicted plasma insulin.

31.-**32**. (canceled)

* * * * *