UNITED STATES PATENT AND TRADEMARK OFFICE

BEFORE THE PATENT TRIAL AND APPEAL BOARD

DEXCOM, INC.,
Petitioner,

v.

ABBOTT DIABETES CARE INC.,
Patent Owner.

U.S. Patent No.: 11,298,056
Issued: April 12, 2022
Application No.: 17/411,154
Filed: August 25, 2021

Title: METHODS AND SYSTEMS FOR EARLY SIGNAL ATTENUATION DETECTION AND PROCESSING

DECLARATION OF BRIAN D. GROSS

DEXCOM
EXHIBIT 1008

TABLE OF CONTENTS

Page

I. INTRODUCTION AND ENGAGEMENT 8

II. BACKGROUND AND QUALIFICATIONS 8

III. SCOPE OF OPINION 10

IV. MATERIALS CONSIDERED AND INFORMATION RELIED UPON REGARDING THE ’056 PATENT 11

A. LIST OF EXHIBITS 11

V. UNDERSTANDING OF PATENT LAW 14

VI. THE ’056 PATENT 17

A. Specification 18

B. Prosecution History 20

VII. STATE-OF-THE-ART AND LEVEL OF SKILL IN THE ART 20

A. State-of-the-Art 20

1. Sensors With Working and Counter Electrodes 21

2. Sensor Sensitivity In Calibration 23

3. Microprocessor Computations 25

4. Bluetooth Communication 30

B. Ordinary Level Of Skill In The Art 31

VIII. GROUND 1: PATEL-2009 AND PARADIGM® REAL-TIME 37

A. Patel-2009 (Ex1012) Is Supported By Its Provisional Application (Ex1014) 37

B. The Medtronic Diabetes Website’s Publication Of Webpages And Other Information On Paradigm® REAL-Time (Ex1011) Was Publicly Accessible And Known By Positas 45

C. Patel-2009 And Paradigm® Real-Time Disclose Glucose Monitoring Systems Easily Combined, And The Motivation To Do So With An Expectation Of Success 47

1. Patel-2009 47

2. Paradigm® REAL-Time 50

3. Combination of Patel-2009 And Paradigm® REAL-Time 51

4. Motivation To Combine And Expectation Of Success.....53

D. Ground 1 Claim Mappings 56

1. Claim 1 56

a) [1.A] (preamble) 56

b) [1.B] 59

c) [1.C] 61

d) [1.D] 63

e) [1.E] 65

f) [1.F].....67

g) [1.G] 69

h) [1.H] 70

i) [1.I] 70

j) [1.J] 72

k) [1.K] 73

l) [1.L] 74

2. Claim 2 76

3. Claim 3 77

4. Claims 5 and 6.....77

5. Claim 7 78

ABBOTT Exhibit 2247
Page 3 of 150
Dexcom v. Abbott, IPR2024-00521

6. Claim 8 79

7. Claim 11 79

8. Claim 12 80

9. Claim 17 81

10. Claim 18 81

11. Claim 19 82

12. Claim 20 83

13. Claim 21 84

14. Claim 22 85

15. Claim 23 86

16. Claim 24 87

17. Claim 26 87

18. Claim 27 88

19. Claim 28 88

20. Claim 30 88

IX. GROUND 2: CLAIMS 4, 9-10, 15-16, AND 25 ARE OBVIOUS OVER PATEL-2009 AND PARADIGM® REAL-TIME IN VIEW OF *CAUSEY* 89

A. *Causey* 89

B. Combination Of Patel-2009, Paradigm® REAL-Time, And Causey 92

C. Motivation To Combine And Expectation Of Success 93

D. Ground 2 Claim Mappings 95

1. Claim 4 96

2. Claim 9 96

3. Claim 10 97

4. Claim 14 98

5. Claim 15 99

6. Claim 16 99

7. Claim 25 100

X. GROUND 3: CLAIMS 1-12, 14-18, 20-28, AND 30 ARE OBVIOUS OVER PATEL-2008 AND INCORPORATED REFERENCES 101

A. Patel-2008 101

B. Incorporation of Mastrototaro, Shahmirian, and Causey 103

1. Mastrototaro 104

2. Shahmirian 109

3. Causey 111

C. Combination, Motivation To Combine, And Expectation Of Success 111

D. Ground 3 Claim Mappings 115

1. Claim 1 115

a) [1.A] (preamble) 115

b) [1.B] 117

c) [1.C] 117

d) [1.D] 120

e) [1.E] 123

f) [1.F] 125

g) [1.G] 129

h) [1.H] 130

i) [1.I] 131

j) [1.J] 132

k) [1.K] 133
l) [1.L] 134
2. Claim 2 134
3. Claim 3 135
4. Claim 4 136
5. Claims 5 And 6 136
6. Claim 7 137
7. Claim 8 137
8. Claim 9 138
9. Claim 10 139
10. Claim 11 139
11. Claim 12 140
12. Claim 14 141
13. Claim 15 141
14. Claim 16 142
15. Claim 17 142
16. Claim 18 143
17. Claim 20 143
18. Claim 21 145
19. Claim 22 146
20. Claim 23 146
21. Claim 24 146
22. Claim 25 148
23. Claim 26 148
24. Claim 27 148

25. Claim 28 149
26. Claim 30 149

I, Brian D. Gross, BSEE, M.Sc., do hereby declare as follows:

I. INTRODUCTION AND ENGAGEMENT

1. My name is Brian D. Gross, and I have been retained as an independent expert on behalf of Dexcom, Inc. in connection with the above-captioned Petition for Inter Partes Review ("IPR") to provide my analyses and opinions on certain technical issues related to U.S. Patent No. 11,298,056 (hereinafter "the '056 Patent").

2. I am being compensated at my usual and customary rate for the time I spent in connection with this IPR. My compensation is not affected by the outcome of this IPR.

3. Specifically, I have been asked to provide my opinions regarding whether claims 1-12, 14-28 and 30 of the '056 Patent would have been obvious to persons having ordinary skill in the art ("POSITAs") as of April 2009. After reviewing the prior art discussed herein, it is my opinion that each of claims 1-12, 14-28 and 30 of the '056 Patent would have been obvious to a POSITA.

II. BACKGROUND AND QUALIFICATIONS

4. Among other qualifications elaborated in my CV (EX 1009), I receive my Bachelor of Science in Electrical and Biomedical Engineering (BSEE) in 1990 and my Masters of Science in Biomedical Engineering (M.Sc.) in 1991.

5. In 1991 and 1992, I worked as a scientist in product development engineering at VivaScan. At VivaScan, my work included designing and building microprocessor-controlled instrumentation in many cases, from discrete components. The efforts at VivaScan focused on physiological monitoring and included research and development related to determining glucose and other analytes in the blood as manifest U.S. Patent No. 5,372,135 ("the '135 Patent") for "Blood constituent determination based on differential spectral analysis" of which I am a co-inventor.

6. From 2003 through 2013, I was co-investigator of a bioengineering research partnership with the Massachusetts Institute of Technology focused on ICU patient monitoring and including the development and application of physiological monitoring concepts and algorithms.

7. From 2006 through 2014, I was a Principal Scientist of Patient Care and Monitoring Solutions at Philips where my work related to physiological monitoring. For example, in February 2008, some of my work on recognizing that gaps in monitored data due to poor network quality could be resolved by caching missed data and transmitting this data when sufficient bandwidth became available was filed as U.S. Provisional Application 61/032,532 on "optimizing physiological monitoring based on available but variable signal quality," which later became U.S. Patent Application 12/918,822 and published as U.S. Publication 2011/0002223

related to "physiological monitoring over a healthcare network." From 2014 to 2022, I was a Fellow Scientist and Clinical System Architect at Philips where I taught, trained, mentored, and supervised, members of the organization with less experience, as well as drove risk management and design tradeoff decisions for the Businesses and Research groups.

8. In 2014, I was appointed by the International Standards Association to serve on the IEC-TC62/SC 62D/JWG 22 as a technical and clinical expert in medical device design. There I participated and led multi-national and multi-domain experts in drafting global safety standards pertaining to medical devices and their design. As a final example of my experience, I participated in technical and clinical research, and co-authored scores of papers including an abstract on how "delayed intravenous insulin therapy initiation is associated with mortality in the ICU," which was presented to the SCCM 40th Critical Care Congress in 2011.

III. SCOPE OF OPINION

9. I have been asked to provide my opinions regarding whether claims 1-12, 14-28, and 30 of the '056 patent would have been unpatentable to a person of ordinary skill in the art (POSITA) as of April 2009 in view of:

- U.S. Patent Publication 2009/0085768 to Patel (Ex1012, "*Patel-2009*");

- An FAQ webpage, features and benefits fact sheet, and sensor features user guide for the Medtronic MiniMed Paradigm® REAL-Time System archive of the Medtronic Diabetes website in October 2007 (Ex1011, "Paradigm® REAL-Time");
- U.S. Publication 2008/0119705 to Patel (Ex1015, "*Patel*-2008")
- U.S. Patent 6,641,533 to Causey (Ex1017, "*Causey*");
- U.S. Patent Publication 2006/0202859 (Ex1019, "*Mastrototaro*"); and
- U.S. Patent Publication 2004/0122353 (Ex1023, "*Shahmirian*").

IV. MATERIALS CONSIDERED AND INFORMATION RELIED UPON REGARDING THE '056 PATENT

10. In preparing this declaration, I have reviewed the following materials bearing Exhibit Nos. that I understand are being referenced in the IPR which this declaration accompanies:

A. LIST OF EXHIBITS

No.	Description
1001	U.S. Patent No. 11,298,056 ("the '056 Patent")
1002	Excerpts from Prosecution File History of U.S. Patent Application No. 17/411,154 ("Harper '154 file history")
1009	Curriculum Vitae of Brian Gross
1011	Exhibits A and B to Affidavit of Nathaniel E Frank-White ("Paradigm® REAL-Time Archive")
1012	U.S. Patent Application Publication No. 2009/0085768 to Patel et. al. ("*Patel*-2009")

1014	U.S. Provisional Patent Application No. 60/976,886 ("*Patel*-2009 provisional")
1015	U.S. Patent Application Publication No. 2008/0119705 to Patel et. al. ("*Patel*-2008")
1017	U.S. Patent No. 6,641,533 to Causey et. al. ("*Causey*")
1019	U.S. Patent Application Publication No. 2006/0202859 to Mastrototaro et. al. ("*Mastrototaro*")
1020	U.S. Patent Application 11/322,568 to Mastrototaro ("Mastrototaro '568 Application")
1022	U.S. Patent Application 10/335,256 to Shahmirian et al. ("Shahmirian '568 Application")
1023	U.S. Patent Application Publication No. 2004/0122353 to Shahmirian et Al. ("*Shahmirian*")
1025	McGarraugh, Geoffrey. "The chemistry of commercial continuous glucose monitors." Diabetes technology & therapeutics 11.S1 (2009): S-17.
1026	U.S. Patent Application Publication No. 2004/0193025 to Steil et al.
1027	Choleau, C., et al. "Calibration of a subcutaneous amperometric glucose sensor implanted for 7 days in diabetic patients: Part 2. Superiority of the one-point calibration method." *Biosensors and Bioelectronics* 17.8 (2002): 647-654.
1028	Velho, G., et al. "In vivo calibration of a subcutaneous glucose sensor for determination of subcutaneous glucose kinetics." *Diabetes, American Diabetes Association* 1.3 (1988): 227-233.
1029	Mastrototaro, John J. "The MiniMed continuous glucose monitoring system." Diabetes technology & therapeutics 2.1, Supplement 1 (2000): 13-18.
1030	U.S. Patent No. 6,424,847 to Mastrototaro et al.
1031	Poitout, V., et al. "A glucose monitoring system for on line estimation in man of blood glucose concentration using a

	miniaturized glucose sensor implanted in the subcutaneous tissue and a wearable control unit." *Diabetologia* 36 (1993): 658-663.
1032	U.S. Patent Application Publication No. 2006/0224109 to Steil et al.
1033	Keenan, D. Barry, et al. "Delays in minimally invasive continuous glucose monitoring devices: a review of current technology." *Journal of diabetes science and technology* 3.5 (2009): 1207-1214.
1035	Armstrong, Siân. "Wireless connectivity for health and sports monitoring: a review." *British journal of sports medicine* 41.5 (2007): 285-289.
1036	Pantelopoulos, Alexandros, and Nikolaos Bourbakis. "A survey on wearable biosensor systems for health monitoring." *2008 30th Annual International Conference of the IEEE Engineering in Medicine and Biology Society*. IEEE, 2008.
1037	Excerpts from Diabetes forecast, November 2007
1038	Excerpts from Diabetes forecast, February 2007
1039	Buckingham, Bruce, Kimberly Caswell, and Darrell M. Wilson. "Real-time continuous glucose monitoring." *Current Opinion in Endocrinology, Diabetes and Obesity* 14.4 (2007): 288-295.
1040	Buckingham, Bruce. "Clinical overview of continuous glucose monitoring." *Journal of Diabetes Science and Technology* 2.2 (2008): 300-306.
1042	Excerpts from Smith, Steven W. *The scientist and engineer's guide to digital signal processing*. California Technical Pub., 1997.
1043	Shenoi, Belle A. *Introduction to digital signal processing and filter design*. John Wiley & Sons, 2006.
1044	Breton, Marc D., et. al. "Optimum Subcutaneous Glucose Sampling and Fourier Analysis of Continuous Glucose Monitors." *Journal of Diabetes Science and Technology* 2.3 (2008): 495-500.

1045	Burge, Mark R., et. al. "Continuous Glucose Monitoring: The Future of Diabetes Management." *Diabetes Spectrum* 21.2 (2008): 112-119.

11. I have also relied on my professional experience in formulating the opinions expressed in this declaration.

V. UNDERSTANDING OF PATENT LAW

12. I am not an attorney. For the purposes of this declaration, I have been informed about certain aspects of the law that are relevant to my opinions. My understanding of the law was provided to me by the Petitioner's attorneys.

13. I understand that when considering the scope of the claims of a patent that the patent claim terms should generally be given the ordinary meaning that the terms would have to a person of ordinary skill in the art in question after reading the patent as of the earliest claimed priority date.

14. I understand that the person of ordinary skill in the art is deemed to read the claim term not only in the context of the particular claim in which the term appears, but in the context of the entire patent, including the specification. I further understand that the principal considerations regarding the scope and meaning of the claims are the plain language of the claim (including the surrounding claim language and context), the patent specification, and the prosecution history. I understand that while a claim is to be read in light of the specification, one must generally avoid importing limitations into the claim from the specification. I am also informed that

the prosecution history can often inform the meaning of the claim by demonstrating how the inventor understood the invention and whether the inventor limited the invention in the course of prosecution, making the claim scope narrower than it would otherwise be. I applied these understandings when considering the scope and meaning of the claims of the ’056 patent.

15. I understand that a prior art reference anticipates an asserted claim, and thus renders the claim unpatentable, if all elements of the claim are disclosed in that prior art reference, either explicitly or inherently (i.e., necessarily present or implied).

16. I further understand that a claim is unpatentable if it would have been obvious. Obviousness of a claim requires that the claim would have been obvious from the perspective of a POSITA at the time the alleged invention was made. I understand that a claim could have been obvious from a single prior art reference or from a combination of two or more prior art references.

17. I understand that an obviousness analysis requires an understanding of the scope and content of the prior art, any differences between the alleged invention and the prior art, and the level of ordinary skill in evaluating the pertinent art.

18. I further understand that a claim would have been obvious if it unites old elements with no change to their respective functions, or merely substitutes one element for another known in the field, and that combination yields predictable

results. While it may be helpful to identify a reason for this combination, I understand that there is no strict requirement of finding an express teaching, suggestion, or motivation to combine within the references. When a product is available, design incentives and other market forces can prompt variations of it, either in the same field or different one. If a POSITA can implement a predictable variation, obviousness likely bars its patentability. For the same reason, if a technique has been used to improve one device and a POSITA would recognize that it would improve similar devices in the same way, using the technique would have been obvious. I understand that a claim would have been obvious if common sense directs one to combine multiple prior art references or add missing features to reproduce the alleged invention recited in the claims.

19. I further understand that certain factors may support or rebut the obviousness of a claim. I understand that such secondary considerations include, among other things, commercial success of the patented invention, skepticism of those having ordinary skill in the art at the time of invention, unexpected results of the invention, any long-felt but unsolved need in the art that was satisfied by the alleged invention, the failure of others to make the alleged invention, praise of the alleged invention by those having ordinary skill in the art, and copying of the alleged invention by others in the field. I understand that there must be a nexus—a connection—between any such secondary considerations and the alleged invention.

I also understand that contemporaneous and independent invention by others is a secondary consideration tending to show obviousness.

20. I am not aware of any allegations by the named inventors of the ’056 patent or any assignee of the ’056 patent that any secondary considerations tend to rebut the obviousness of any Challenged Claim of the ’056 patent.

21. I understand that in considering obviousness, it is important not to determine obviousness using the benefit of hindsight derived from the descriptions found in the patent being considered.

22. I understand that other challenges to the patentability of a patent, including patent ineligibility, enablement, written description, and definiteness or clarity of claim language, cannot be raised in IPR proceedings before the Board.

23. I understand that Petitioner has the burden of proving unpatentability by a preponderance of evidence, which means that the claims are more likely than not unpatentable.

24. The analysis in this declaration is in accordance with the above-stated legal principles.

VI. THE ’056 PATENT

25. As part of my analysis, I reviewed and considered the ’056 patent (Ex1001) titled “Methods and Systems for Early Signal Attenuation Detection and Processing” which Counsel for Petitioner informed me issued from U.S. Application

17/411,154 on April 12, 2022. The following highlights general aspects of the ’056 patent and is not meant to describe my full understanding of the patent or its prosecution history.

A. Specification

26. The ’056 patent describes an analyte monitoring system including a sensor unit, a data processing and transmitter unit, and a primary receiver unit. (Ex1001, 4:56-61.)

27. The transmitter unit “receives analyte related sensor data” from the sensor and transmits this data to the receiver unit. (Ex1001, 11:27-37.) The transmitter unit is described as operating on approximate radio frequency bands of 315-322MHz or 400-470MHz. (Ex1001, 9:15-22.) The communication link between the transmitter and receiver is discussed as including various infrared, Bluetooth®, 802.11x, or other wireless communication protocols. (Ex1001, 7:25-33.)

28. The ’056 patent defines “analyte related sensor data herein and throughout [the] specification” as both “current signal received from the analyte sensor” and “current signal which has undergone … processing routines including, for example filtering, clipping, digitizing,” encoding, conditioning, or further processing. (Ex1001, 11:37-44, 14:21-23.) For example, unprocessed or uncalibrated sensor data is processed with “calibration data such as [a] sensitivity ratio.” (Ex1001, 12:54-61.) Calibration “ensure[s] the analyte related data signals …

are correctly converted to corresponding analyte levels," but various conditions render calibration unsuitable. (Ex1001, 10:62-66, 11:6-8.) The '056 patent then describes that "when a scheduled calibration event fails …, the output display of the processed, calibrated sensor data is disabled" resulting in a gap "where the analyte monitoring system was not properly calibrated [and] analyte related sensor data was not processed:"

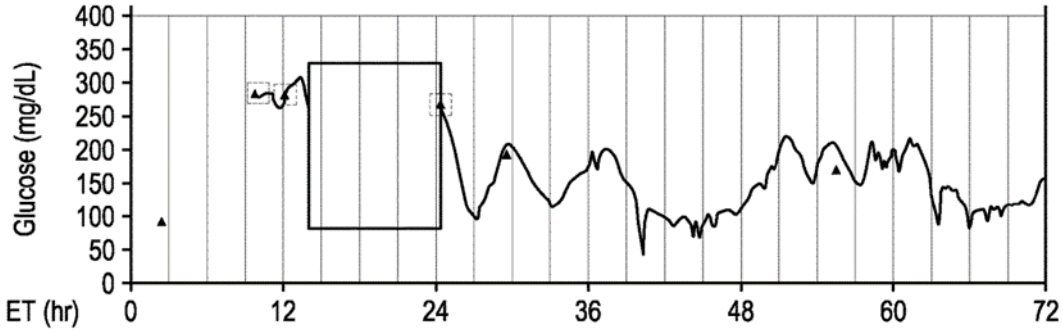

FIG. 7A

(Ex1001, 12:32-45, Fig. 7A.) The '056 patent specification describes backfilling gaps by processing unprocessed sensor data with the sensitivity ratio from a subsequent calibration:

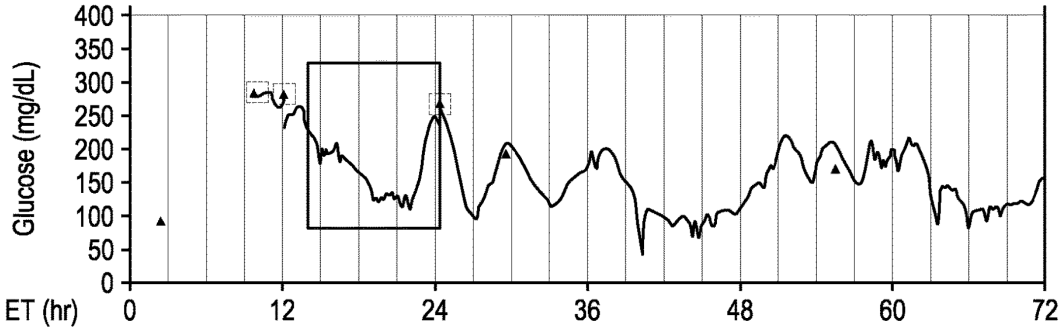

FIG. 7B

(Ex1001, 12:47-13:5, Fig. 7B.)

B. Prosecution History

29. Counsel for Petitioner informed me that the ’056 Patent (Ex1001) issued from U.S. Patent Application No. 17/411,154 filed August 25, 2021 (Ex1002), which claims priority to the April 29, 2009 filing of Provisional Application 61/173,600 through a series of continuation applications.

30. I have reviewed U.S. Patent Application No. 17/411,154 and its prosecution files history. (Ex1002).

VII. STATE-OF-THE-ART AND LEVEL OF SKILL IN THE ART

A. State-of-the-Art

31. The ’056 patent pertains to glucose monitoring systems, including:

- two and three-electrode sensors that generate analyte signals (Ex1001, 1:34-37);

- calibration to determine a "sensitivity ratio" that is used to convert sensor data to analyte levels (Ex1001, 12:47-61);
- signal processing (*e.g.*, filtering, clipping, digitizing, conditioning) (Ex1001, 5:58-64, 11:37-44); and
- RF transmission (*e.g.*, 315-322MHz, 400-470MHz, Bluetooth, 802.11x/WLAN). (Ex1001, 7:25-33, 9:15-22.)

As discussed in this section, these were each well-known, fundamental concepts of glucose monitoring by April 2009. (*See* Paragraphs 32-49.)

1. <u>Sensors With Working and Counter Electrodes</u>

32. Analyte sensors with "two or three-electrode (work, reference, and counter electrodes) configuration[s]" were well known to POSITAs by April 2009. This knowledge is illustrated by the references in paragraphs 33-35 below.

33. For example, a May 2009 article on "The Chemistry of Commercial Continuous Glucose Monitors" by McGarraugh provides:

- a typical glucose sensor "includes three electrodes: a GOx working electrode, a counter electrode, and an Ag/AgCl reference electrode" (Ex1025, S-19); and
- each of the Medtronic Guardian REAL-Time, DexCom™ STS™-7, and Abbot FreeStyle Navigator® "measure[d] the current flowing from an oxidation (electron-producing) reaction at a working electrode to a

reduction (electron-consuming) reaction at a counter electrode." (Ex1025, S-19.)

34. Medtronic's U.S. Publication 2006/0202859 to *Mastrototaro* discloses a sensor with three sensor electrodes 20:

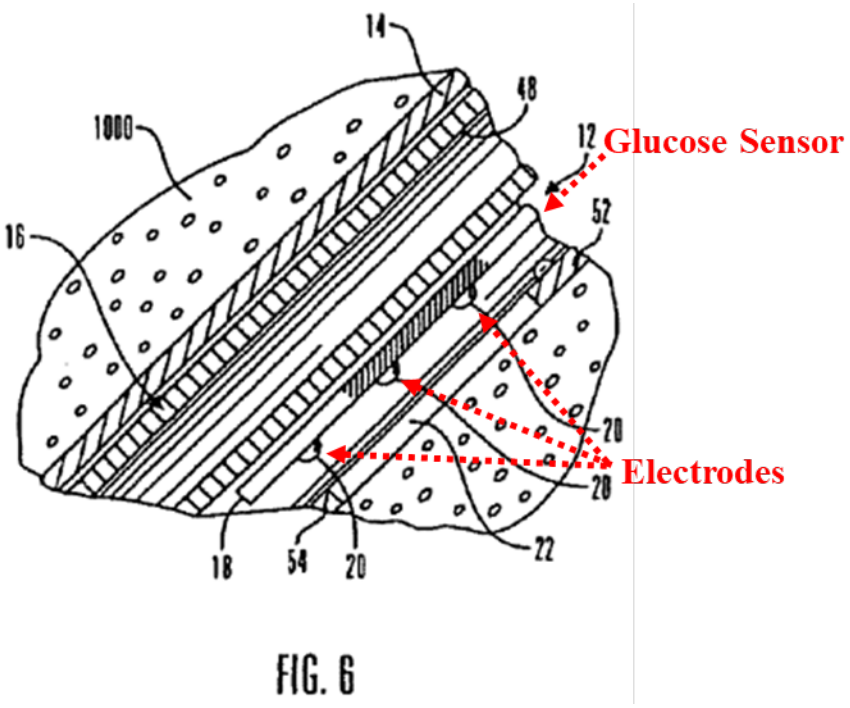

(Ex1019, [0045], Fig. 6 (annotated in red).)

35. Medtronic's U.S. Publication 2004/0193025 labels the counter (CNT) electrode in a similar figure:

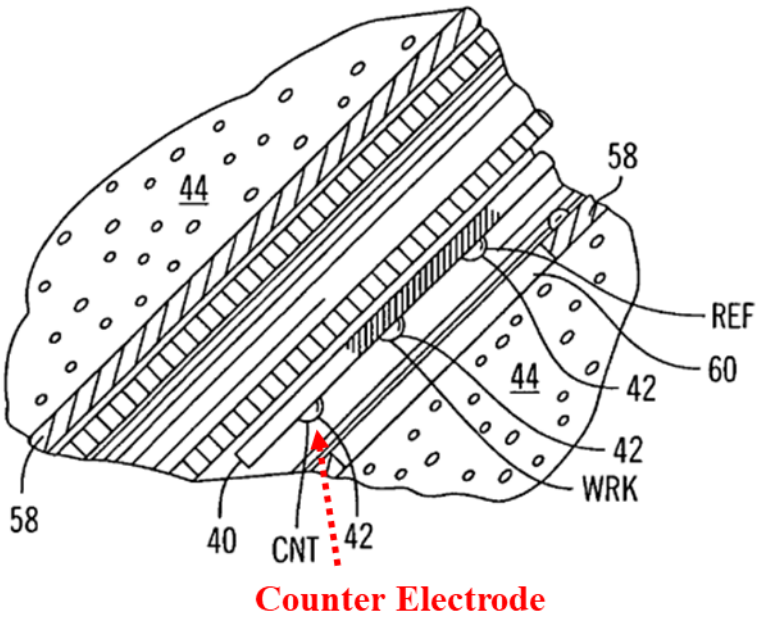

FIG. 4

(Ex1026, [0038], Fig. 4 (annotated in red).)

36. Therefore, it is my opinion that skilled artisans were familiar with sensor configurations including work and counter electrodes.

2. Sensor Sensitivity In Calibration

37. Sensor calibration was well known to POSITAs by April 2009. As illustrated by the references in paragraphs 38-39 below, glucose sensor calibration was typically performed by using blood glucose reference values to determine a sensitivity coefficient or ratio between sensor current and glucose concentration, which was later applied to convert sensor current to glucose concentration.

38. For example, a 1988 article titled "In vivo calibration of a subcutaneous glucose sensor for determination of subcutaneous glucose kinetics" by Valho et. al. "defined a method for calibrating *in vivo* a subcutaneous glucose sensor" as

"determining, for a given sensor, the variation in the current corresponding to a change in BG [(blood glucose)] concentration. This in vivo sensitivity coefficient was then used to determine from the sensor output an apparent subcutaneous glucose concentration…" (Ex1028, 227; *see also* 228 (discussing the sensitivity coefficient as the "ratio between decrease in the sensor current and the decrease in glucose concentration.") "The *in vivo* sensitivity coefficient" is then "used to calculate apparent subcutaneous glucose level" by dividing "current by the sensitivity coefficient" after subtracting baseline (I_0). (Ex1028, 228-229.) Similarly, a 2002 article on "Calibration of a subcutaneous amperometric glucose sensor implanted for 7 days in diabetic patients Part 2: Superiority of the one-point calibration method" by Choleau et. al. provides:

> [T]he sensor sensitivity S is determined from a single blood glucose determination as the ratio between the concomitant sensor current I and the blood glucose concentration G. Subsequently, the glucose concentration can be estimated at any time from the current I as $G(t) = I(t)/S$.

(Ex1027, 648.)

39. According to a 2000 article titled "The MiniMed Continuous Glucose Monitoring System" by Mastrototaro, the Medtronic CGMS associates interstitial glucose concentration to electrical current in nanoamperes (nA) using a calibration based on blood glucose readings. (Ex1029, S-15.) Consistently, Medtronic's U.S. Patent 6,424,847 provides that calibration involves calculating a calibration factor

called a sensitivity ratio (SR) (blood glucose level/Valid ISIG value) … used to convert the Valid ISIG value (Nano-Amps) into a blood glucose level (mg/dl or mmol/l)." (Ex1030, 11:28-33.)

40. Therefore, skilled artisans know that calibration is associated with the sensitivity of the glucose sensor and were familiar with using blood glucose reference values to determine a sensor sensitivity ratio and with applying this sensitivity ratio to convert sensor signals to glucose concentrations. POSITAs knew that both the data relied on to calibrate the sensor and the resulting coefficients used to convert sensor signals to glucose concentrations are associated with the sensitivity of the glucose sensor.

3. Microprocessor Computations

41. Processing sensor signals with various algorithms and processing routines was well known to POSITAs by 2009. This knowledge is illustrated by the references in paragraphs 42-45 below.

42. As discussed in an article titled "A glucose monitoring system for on line estimation in man of blood glucose concentration using a miniaturized glucose sensor inserted in the subcutaneous tissue and a wearable control unit" by Poitout et al., the necessity of sampling, filtering, storing, and processing glucose sensor electrical current values before conversion to real-time glucose concentrations was well known by 1993. (Ex1031, 661.) For example, early glucose monitors had

memory to store 8,000 electrical current values and used algorithm procedures to filter and process signals. (Ex1031, 659, 662.)

43. By the early to mid-2000's, Medtronic had developed more advanced procedures for smoothing, filtering, storing, and processing sensor electrical current signals. For example, Medtronic's U.S. Patent 6,641,533 to *Causey* used a sensor monitor and microprocessor to smooth and store signals received from the sensor and to determine corresponding analyte levels. (Ex1017, 22:18-22.) Meanwhile, Medtronic's U.S. Publication 2006/0224109 provides that before filtering and calibration, sensor signals are processed from analog current (Isig) to digital sensor values (Dsig) which are stored in a buffer. (Ex1032, [230].)

44. A 2009 article titled "Delays in Minimally Invasive Continuous Glucose Monitoring Devices: A Review of Current Technology" by Keenan et al., the Medtronic Guardian RT used a "seventh-order finite impulse response filter … decimated to a 5-minute sample time interval" resulting in 8.25 minutes delay to smooth the sensor's electrical current signal with a moving average. (Ex1033, 1211.) Similarly, Medtronic's U.S. Patent 6,424,847 provides for sampling electrical current every 10 seconds and storing averaged sampling intervals in memory. (Ex1030, 8:42-60.) Finally, a 2008 article titled "Optimum Subcutaneous Glucose Sampling and Fourier Analysis of Continuous Glucose Monitoring" by Breton et al. computed the maximum sampling frequency (*i.e.*, Nyquist Rate) for accurately

determining blood glucose from interstitial glucose accounting for noise as longer than 5 minute and optimally 18 minutes. (*See also* Ex1045, 497-98.) POSITAs would recognize that these filtering, averaging, and sampling procedures would induce a lag (*e.g.*, 8.25 minutes) between when sensor data is measured and when processed glucose data is displayed and that data would need to be stored in memory at various points during processing. POSITAs would also recognize that data could be scheduled to update in accordance with one of more sampling intervals (*e.g.*, every 10 seconds, minute, or 5 minutes, 18 minutes, etc.).

45. POSITAs would have known to store sensor signals or other data used by a processor in performing any of the processing routines described above. For example, Chapter 28 of the 1997 publication Scientist and Engineer's Guide to Digital Signal Processing by Steven W. Smith acknowledges the role of memory in executing processing routines on page 509: "One of the biggest bottlenecks in executing DSP [Digital Signal Processing] algorithms is transferring information to and from memory. This includes data, such as samples from the input signal and the filter coefficients, as well as program instructions, the binary codes that go into the program sequencer. For example, suppose we need to multiply two numbers that reside somewhere in memory. To do this, we must fetch three binary values from memory, the numbers to be multiplied, plus the program instruction describing what

to do." (Ex1042, p. 509). Example processor architecture, including memory for storing data to be processed, is shown in Smith as well:

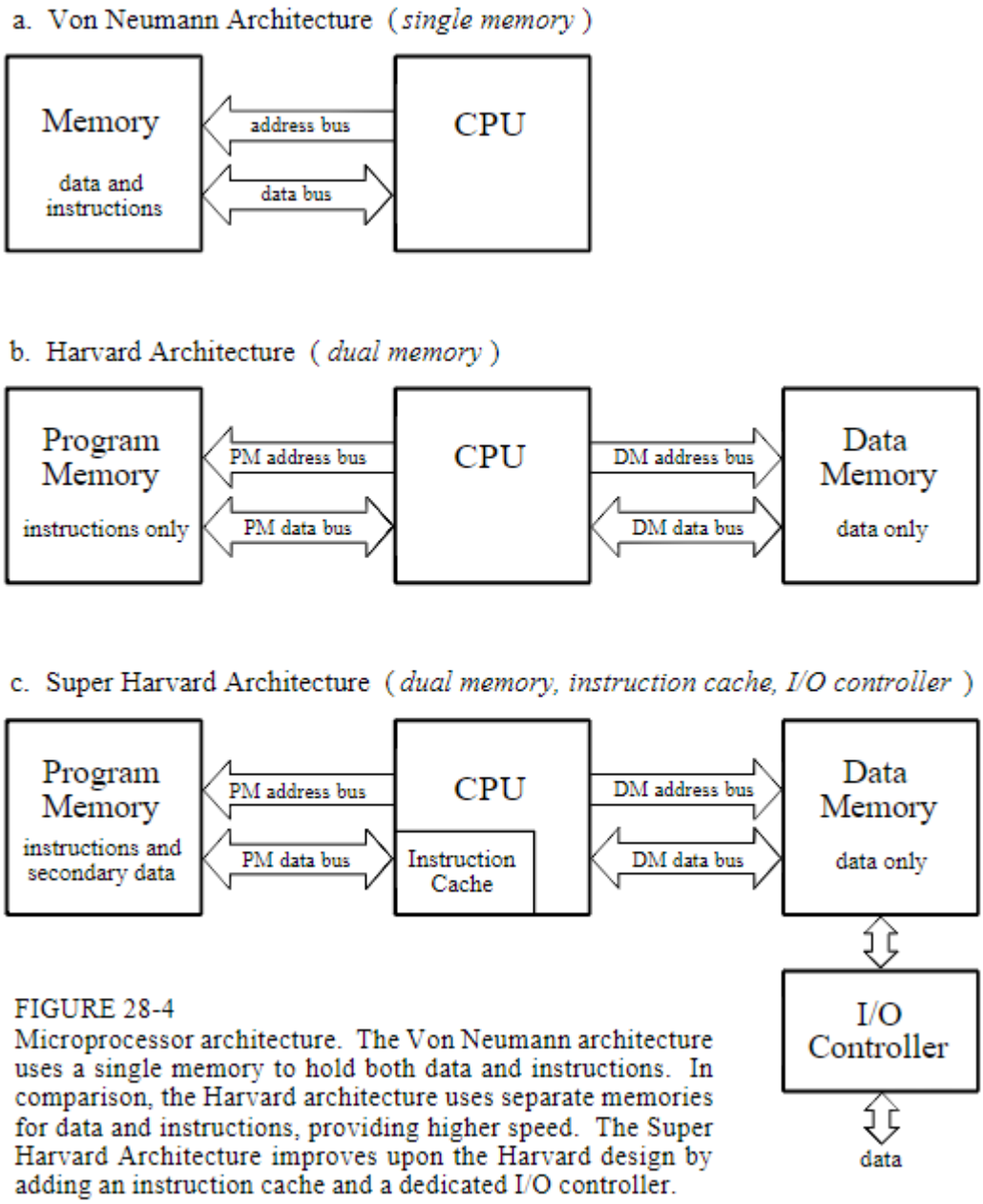

FIGURE 28-4
Microprocessor architecture. The Von Neumann architecture uses a single memory to hold both data and instructions. In comparison, the Harvard architecture uses separate memories for data and instructions, providing higher speed. The Super Harvard Architecture improves upon the Harvard design by adding an instruction cache and a dedicated I/O controller.

(Ex1042, p. 511.) The above description regarding the reliance upon memory and the storage of data while performing processing tasks is applicable to systems with more modern processors as well. For example, the 2006 publication Introduction to

Digital Signal Processing and Filter Design by B. A. Shenoi provided an example digital signal processing system:

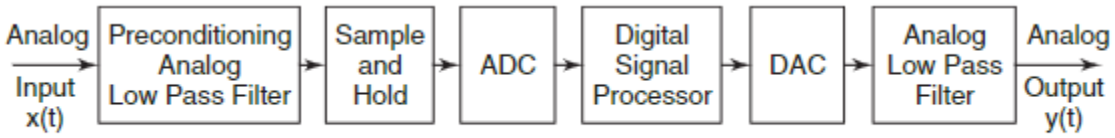

Figure 1.17 Example of a digital signal processing system.

(Ex1043, p. 23). Shenoi further described that "[t]he basic elements in digital filters are the multipliers, adders, and delay elements, and they carry out multiplication, addition, and shifting operations on numbers according to an algorithm determined by the transfer function of the filters or their equivalent models," and that "[t]he coefficients of the transfer function and the sample values of the input signal can be stored in the memory of the digital filter hardware or on the computer (PC, workstation, or the mainframe computer)." (Ex1043, p. 23). Shenoi further acknowledged that digital signal processing is used in biomedical systems. (Ex1043, p. 2). By 2009, memory and processing technology was more advanced than the technology discussed in these articles and could, for example, hold more data than memories developed in 2006.

46. Therefore, skilled artisans were familiar with filtering, smoothing, clipping, digitizing, conditioning, and other processing routines for sensor signals using a microprocessor and knew that sensor data is stored in memory (*e.g.*, processor cache, buffer, RAM) throughout these routines to run computations.

4. Bluetooth Communication

47. By April 2009, Bluetooth communication was well known to POSITAs, would have been considered one of few options for short range medical device communications, and was an obvious choice for radio frequency communications.

48. For example, a January 2007 review of "Wireless connectivity for health and sports monitoring" found that most of the literature on healthcare monitoring and tele-medicine related to the application of Bluetooth, described as a short-range cable replacement for device-to-device connections. (Ex1035, 286-87.) Bluetooth was used widely, including for physiological monitoring with medical devices. For example, "A Survey on Wearable Biosensor Systems for Health Monitoring" presented at the International IEEE EMBS Conference in August 2008, studied 25 wearable biosensors and found that 10 used Bluetooth. (Ex1036, 4888-89.)

49. Therefore, skilled artisans were familiar with implementing Bluetooth communication for short range device-to-device connections in health monitoring applications.

B. Ordinary Level Of Skill In The Art

50. I understand that a person of ordinary skill in the art ("POSITA") is a hypothetical person who has the experience and skills of a typical person working in the field of the alleged invention at the time the invention was allegedly made.

51. As of April 2009, I believe that persons of ordinary skill in the art ("POSITAs") would have had a Bachelor of Science degree in biomedical engineering, or a similar field, such as electrical, or software, or computer engineering, and two years of industry experience or research working with medical devices and systems for measuring biomedical signals. Such systems might include those for determining levels of blood analytes, such as glucose, in a patient and transmit indications of such levels to a receiving device for reporting the measurements. Additional education, such as a Master's degree could substitute for the industry experience, or vice versa.

52. POSITAs may be part of an interdisciplinary team with others having relevant experience in the areas set forth above and/or with clinicians involved in diagnosis, treatment, and patient management relevant to the use of medical devices for monitoring physiological signals. This definition of a POSITA would not differ materially for a date of April 2010.

53. As elaborated in my CV, my skills and experience met or exceeded those of a POSITA at the relevant time, and today. (*See* paragraphs 4-8 above.)

Unless otherwise noted, however, in this declaration my opinions present the viewpoint of a hypothetical POSITA.

54. In my view, POSITAs would have had broad working knowledge of glucose monitoring technology, including at least: (a) knowledge of subcutaneous glucose sensors as discussed with sensor electrodes above and the knowledge and skills to use amperometric sensors that measured current flowing from the glucose oxidase (GOx) catalyzed oxidation of glucose at a working electrode to a corresponding reduction reaction at a counter electrode; (b) knowledge of calibration as discussed with sensitivity in calibration above and the knowledge and skill to use of blood glucose reference values to calculate the sensitivity coefficient of a glucose sensor and to apply this sensitivity coefficient to convert current from an amperometric glucose sensor to commensurate glucose concentrations; (c) knowledge of signal processing as discussed with microprocessor computations above and the knowledge and skills to smooth, filter, digitize, encode, condition, calibrate, and convert signals from a glucose sensor into calculated glucose concentration values, save these values in memory as necessary to perform processing and computations, and ultimately display these values numerically and graphically; (d) knowledge of wireless and Bluetooth communication as discussed above and the knowledge and skills to implement Bluetooth and other wireless

communication protocols between multiple devices like transceivers, monitors/receivers, cell phones, PDAs, personal computers and insulin pumps.

55. POSITAs would have been aware of commercially available glucose monitoring systems through scientific journals and magazines, including continuous glucose monitoring systems from Dexcom, Abbott, and Medtronic, like the Medtronic MiniMed Paradigm® REAL-Time System. POSITAs would have known the importance of data reliability to glucose monitoring, including anticipating that errors (*e.g.*, communication or calibration failures) would result in missing or inaccurate glucose data. POSITAs would have accounted for missing data using technical concepts known at the time, including programing glucose monitoring systems to detect failures that result in data being unavailable for display (e.g., due to a calibration error or loss of communication), preserving this data in memory, and regenerating it once the system recovered.

56. In addition to specific knowledge of glucose monitoring, POSITAs would have been skilled in fundamental technologies and techniques in biomedical, electrical, and computer engineering, including programming a microprocessor with programs stored in memory. First, POSITAs would have been skilled in programing a microprocessor to run calibration, calculation, or filtering algorithms and other processing routines on glucose data. POSITAs would have also known how to program a microprocessor to store glucose data throughout processing, including

electrical current values, smooth sensor signals, average sampling intervals, digital sensor values (Dsig), and calculated glucose values in various types of memory like a processor cache or buffer, RAM, or flash memory. POSTIAs would have been skilled at programming a microprocessor to detect the failed reception of glucose data, sensor instability, rapidly changing glucose values, glucose level excursions, faulty or interrupted glucose readings, and other conditions associated with measuring, transmitting, receiving, and calibrating glucose data. POSITAs would have been skilled a programming a microprocessor to respond to these conditions by, for example, prompting or delaying calibration, storing glucose data in memory, and displaying a gap in graphed glucose levels when glucose data is not received. To this point, POSITAs would have known to program a microprocessor to display glucose data using a graphical user interface. Finally, POSITAs would have been skilled in bi-directional communication protocols, including verifying receipt of transmitted information, echoing received information, and retransmitting or synchronizing information between two devices over a wireless communication link. POSITAs would have known that any devices which perform these functions (*i.e.*, transceiver, monitor, PDA, cell phone, insulin pump) have a processor.

57. For example, based at least on their education in biomedical, electrical, software, or computer engineering and corresponding experience, POSITAs would have known how to program and reprogram microprocessor-controlled devices,

including transceivers and monitors, to perform computations, monitoring, detection, alarm, data management, display and other functions associated with physiological monitoring. POSITAs would have consulted members of their interdisciplinary team as necessary to program these devices and functions.

58. As an additional example, based on their education and experience in physiological monitoring, POSITAs would have known that failed communication could be caused by a variety of errors (*e.g.*, transmission error, reception error, signal error) and malfunctions with system components (*e.g.*, transceiver, monitor), and that failed communication would cause data to be unavailable and lead to the inability to display this data. In addition, POSITAs would also have recognized from reviewing any of the *Patel*-2009 (Ex1012), Paradigm REAL-Time (Ex1011), *Patel*-2008 (Ex1015), or *Shahmirian* (Ex1023) references that failed communication would cause missing data that could not be displayed. POSITAs would have been motivated to correct calibration errors, including requesting blood glucose reference values and prompting calibration, when conditions preventing calibration resolve or otherwise as necessary to continue the display of accurate glucose concentrations to a user.

59. As a further example, based on their education and experience in physiological monitoring, POSITAs would have known that the failure to convert sensor signals to calculated analyte concentrations could be caused by a variety of

conditions, including faulty or interrupted sensor readings and calibration errors based on, for example, sensor instability, extreme temperatures, extreme glucose levels, rapid glucose changes, and issues with blood glucose reference values. POSITAs would understand that failure to calculate analyte concentrations would cause missing analyte data and lead to the inability to display this missing data. In addition, POSITAs would also have recognized from reviewing either of the Paradigm REAL-Time (Ex1011) or *Causey* (Ex1017) references that each of these conditions would cause missing data that could not be displayed.

60. In order to apprise users that analyte data is missing without presenting inaccurate data, POSITAs would have found it obvious to display a gap to indicate when analyte data is missing due to failed communication, failed calibration, or another condition. When failed communication or failed/delayed calibration is resolved and previously missing data becomes available, POSITAs would have found it obvious to display previously missing data to the user in order to present as much accurate data as possible to assist in diabetes management, insulin dosing decisions, and prevention or treatment of hyper and hypo-glycemia. (Ex1011, 15, 18, 23-27; Ex1012, [0004], [0006]; *see also e.g.*, Ex1029; Ex1037, 17; Exs1039-1040.) In addition, POSITAs would have found it obvious to display previously missing data by filling-in/re-populating this data is analytes graphs. POSITAs would

recognize that retransmitting, synchronizing, and re-populating missing glucose data necessarily entails storing this data and the time of each missing glucose data point.

61. Finally, POSITAs would have known that a transceiver is comprised of a transmitter and a receiver. POSITAs also would have known that a transmitter and antenna are required to transmit signals, that a receiver and antenna are required to receive signals, and that cell phones, PDAs, and other devices that transmit and receive radio frequency communications have both an antenna and a transceiver.

VIII. GROUND 1: PATEL-2009 AND PARADIGM® REAL-TIME

A. Patel-2009 (Ex1012) Is Supported By Its Provisional Application (Ex1014)

62. U.S. Patent Publication 2009/0085768 ("*Patel*-2009", Ex1012) is titled "Glucose sensor transceiver."

63. Counsel for Petitioner informed me that *Patel*-2009 published from U.S. Application No. 12/056,651 and that *Patel*-2009 claims priority to U.S. Provisional Application No. 60/976,886 ("the '886 Provisional", Ex1014).

64. I have reviewed *Patel*-2009, including claim 1 directed to "[a] telemetered characteristic sensor transceiver for exchanging data with at least one remote device." (Ex1012, p.9.) I have also reviewed the 60/976,886 provisional application. (Ex1014.)

65. Based on my review, it is my opinion that the '886 Provisional Application (Ex1014) supports claim 1 of *Patel*-2009 (Ex1012). In support of this

conclusion, I note that page 31 of the '886 Provisional includes a claim that is substantially similar to claim 1 of *Patel*-2009, with only minor revisions highlighted below:

> 1. A telemetered characteristic sensor transceiver for exchanging data with at least one remote device, the transceiver comprising:
> a housing~~; a sensor connector coupling the housing to~~ detachably coupled to a sensor located on a body of a user ~~for~~, the sensor producing a signal indicative of a user characteristic;
> a processor formed within the housing and ~~coupled to~~ in communication with the sensor ~~connector~~ for processing the signal ~~received from~~ produced by the sensor;
> a transmitter coupled to the processor for transmitting data to at least one remote device;
> a receiver coupled to the processor for receiving data from the at least one remote device; and
> a memory coupled to the processor for storing data,
> wherein the processor performs calculations using at least one of the signal ~~received from~~ produced by the sensor, the data received from the at least one remote device and the data stored in the memory, and ~~stores~~ performs at least one of storing the calculations in the memory ~~or transmits~~ and transmitting the calculations to the at least one remote device through the transmitter.

66. It is also my opinion that the '886 Provisional supports claim 1 of *Patel*-2009 as detailed in the chart below:

60/976886 Provisional	***Patel*-2009 Claim 1**
(Ex1014, p.9) [0007] The present invention relates to a telemetered characteristic sensor transceiver for exchanging data with at least one remote device. The transceiver comprising a housing, a sensor connector coupling the housing to a sensor located on a body of a user for	It is my opinion that this paragraph [0007] supports the follow elements of claim 1 of *Patel*-2009: A telemetered characteristic sensor transceiver for exchanging data with at least one remote device, the transceiver comprising:

producing a signal indicative of a user characteristic, a processor formed within the housing and coupled to the sensor connector for processing the signal received from the sensor, a transmitter coupled to the processor for transmitting data to at least one remote device, a receiver coupled to the processor for receiving data from the at least one remote device, and a memory coupled to the processor for storing data. Preferably, the processor performs calculations using at least one of the signal received from the sensor, the data received from the at least one remote device and the data stored in the memory, and stores the calculations in the memory or transmits the calculations to the at least one remote device through the transmitter.	the sensor producing a signal indicative of a user characteristic; a processor formed within the housing and in communication with the sensor for processing the signal produced by the sensor; a transmitter coupled to the processor for transmitting data to at least one remote device; a receiver coupled to the processor for receiving data from the at least one remote device; and a memory coupled to the processor for storing data
(Ex1014, p.10) [0012] In accordance with another embodiment of the present invention, the processor calculates sensor glucose values using at least one of the signal received from the sensor, the data received from the at least one remote device and the data stored in the memory. Preferably, a rate of exchanging data between the transceiver and the at least one remote device is dynamically changed depending on a characteristic of the calculated sensor glucose values. Preferably, a glucose calculation algorithm for calculating the sensor glucose values is stored in the memory. Preferably, the processor stores the	It is my opinion that this paragraph [0012] supports the follow elements of claim 1 of the *Patel*-2009: a transmitter coupled to the processor for transmitting data to at least one remote device; and a memory coupled to the processor for storing data, wherein the processor performs calculations using at least one of the signal produced by the sensor, the data received from the at least one remote device and the data stored in the memory, and performs at least one of storing the calculations in the memory

calculated sensor glucose values in the memory or transmits the calculated sensor glucose values to the at least one remote device through the transmitter. Preferably, the calculated sensor glucose values are secured via an encryption scheme before transmission to the at least one remote device.	and transmitting the calculations to the at least one remote device through the transmitter.
(Ex1014, p.10) [0013] In accordance with another embodiment of the present invention, the receiver receives calibration data from the at least one remote device and the processor stores the received calibration data in the memory. Preferably, the processor performs a calibration using at least one of the calibration data stored in the memory, the signal received from the sensor and the calculated glucose sensor values. Preferably, a calibration algorithm for performing the calibration is stored in the memory.	It is my opinion that this paragraph [0013] supports the follow elements of claim 1 of *Patel*-2009: a processor formed within the housing and in communication with the sensor for processing the signal produced by the sensor; a receiver coupled to the processor for receiving data from the at least one remote device;
(Ex1014, p.19-20) [0050] As shown in FIGS. 1, 2 and 8A, the telemetered characteristic sensor transceiver 100 is coupled to a sensor set 10 by a cable 102 through a connector 104 that is electrically coupled to the connector block 28 of the connector portion 24 of the sensor set 10. In alternative embodiments, the cable 102 may be omitted, and the telemetered characteristic sensor transceiver 100 may include an appropriate connector (not shown) for direct connection to the	It is my opinion that this paragraph [0010] supports the follow elements of claim 1 of *Patel*-2009: a housing detachably coupled to a sensor located on a body of a user,

connector portion 24 of the sensor set 10 or the sensor set 10 may be modified to have the connector portion 24 positioned at a different location, such as for example, on the top of the sensor set 10 to facilitate placement of the telemetered characteristic sensor transceiver over the subcutaneous sensor set 10. This would minimize the amount of skin surface covered or contacted by medical devices, and tend to minimize movement of the sensor set 10 relative to the telemetered characteristic sensor transceiver 100. In further alternative embodiments, the cable 102 and the connector 104 may be formed as add-on adapters to fit different types of connectors on different types or kinds of sensor sets. The use of adapters would facilitate adaptation of the telemetered characteristic sensor transceiver 100 to work with a wide variety of sensor systems… (Ex1014, p.20) [0051] The telemetered characteristic sensor transceiver 100 includes a housing 106 that supports a printed circuit board 108, batteries 110, antenna 112, and the cable 102 with the connector 104… (Ex1014, p.21) [0054] Referring to FIG. 8B, the printed circuit board 108 of the telemetered characteristic sensor transceiver 100 includes a sensor interface 122, processing electronics 124, timers 126, and data formatting electronics 128. In	

preferred embodiments, the sensor interface 122, processing electronics 124, timers 126, and data formatting electronics 128 are formed as separate semiconductor chips; however, alternative embodiments may combine the various semiconductor chips into a single customized semiconductor chip. The sensor interface 122 connects with the cable 102 that is connected with the sensor set 10. In preferred embodiments, the sensor interface is permanently connected to the cable 102. However, in alternative embodiments, the sensor interface 122 may be configured in the form of a jack to accept different types of cables that provide adaptability of the telemetered characteristic sensor transmitter 100 to work with different types of sensors and/or sensors placed in different locations of the user's body… (Ex1014, p.50) 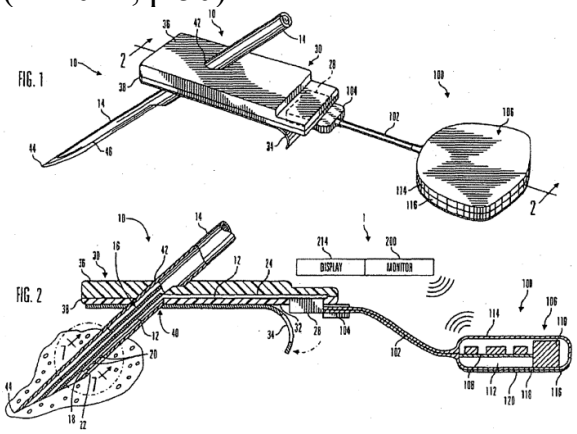 (Ex1014, p.52)	

ABBOTT Exhibit 2247
Page 42 of 150
Dexcom v. Abbott, IPR2024-00521

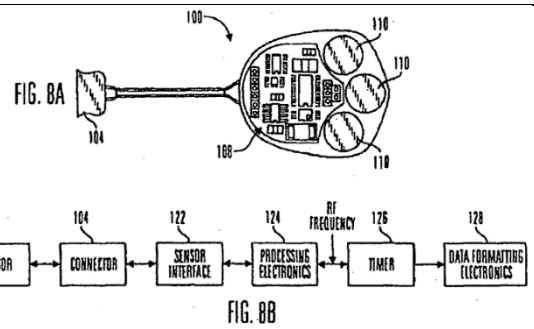

(Ex1014, p.56)

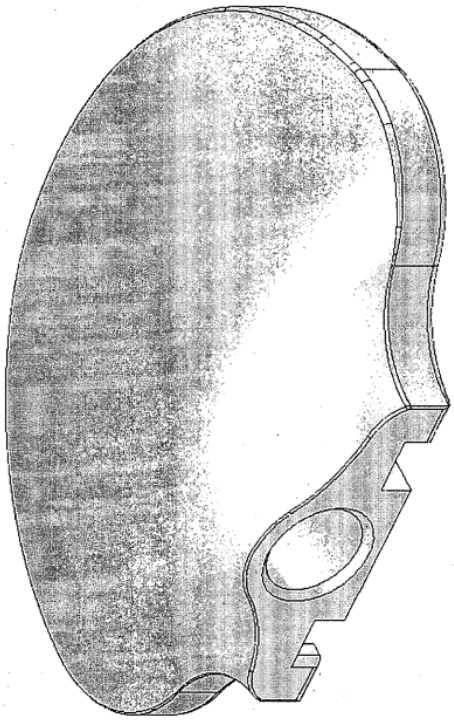

FIG. 13

(Ex1014, p.61)

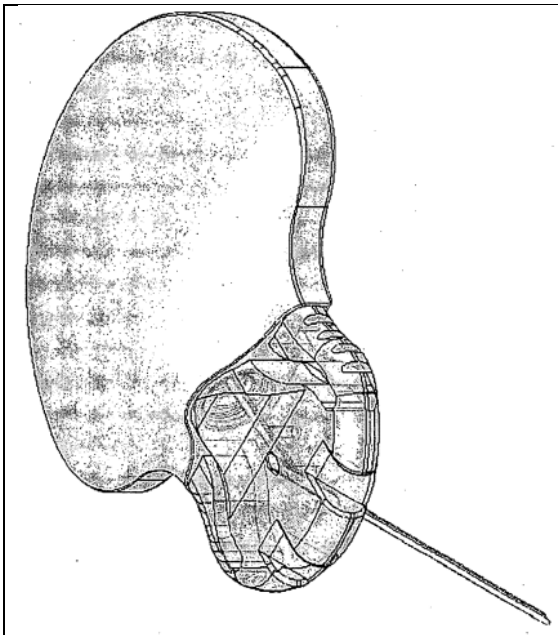	
(Ex1014, p.24) [0062] In further embodiments, the transceiver 100 may transmit the data to a medication delivery device, such as an infusion pump or the like, as part of a closed loop system. This would allow the medication delivery device to compare sensor results with medication delivery data and either sound alarms when appropriate or suggest corrections to the medication delivery regimen. In preferred embodiments, the transceiver 100 includes a receiver for receiving data from the medication delivery device such that the transceiver 100 can compare sensor results with medication delivery. The transceiver 100 may also use the receiver to receive updates or requests for additional sensor data.	It is my opinion that this paragraph [0062] supports the follow elements of claim 1 of the *Patel*-2009: a receiver coupled to the processor for receiving data from the at least one remote device;

67. Therefore, it is my conclusion that claim 1 of *Patel*-2009 (Ex1012) and all elements of this claim are well supported by the ’886 Provisional (Ex1014).

ABBOTT Exhibit 2247
Page 44 of 150
Dexcom v. Abbott, IPR2024-00521

B. The Medtronic Diabetes Website's Publication Of Webpages And Other Information On Paradigm® REAL-Time (Ex1011) Was Publicly Accessible And Known By Positas

68. I have reviewed the Paradigm® REAL-Time reference (Ex1011), including the Features & Benefits Fact Sheet, Frequently Ask Questions Webpage, and Sensor Features User Guide.

69. It is my opinion that, POSITAs would have been aware of Continuous Glucose Monitoring Systems from Medtronic, Dexcom, and Abbott, including the Medtronic MiniMed Paradigm® REAL-Time.

70. POSITAs would have also been aware of scientific publications in the fields of physiological monitoring and diabetes, including the "Journal of Diabetes Science and Technology" and "Current Opinion in Endocrinology, Diabetes and Obesity." For example, POSITAs would have been aware of an August 2007 article titled "Real-time continuous glucose monitoring" by Bruce Buckingham et. al. published in Current Opinion in Endocrinology, Diabetes and Obesity. (Ex1039.) This "Real-time continuous glucose monitoring" article introduced the MiniMed Paradigm REAL-Time Continuous Glucose Monitoring System to POSITAs as an FDA approved system with various features including display of glucose graphs. (Ex1039, 289-93.) Additionally, POSITAs would have been aware of a March 2008 article titled "Clinical Overview of Continuous Glucose Monitoring" by Bruce Buckingham in the Journal of Diabetes Science and Technology. (Ex1040.) This

"Clinical Overview of Continuous Glucose Monitoring" article also introduced the Paradigm system as one of four continuous glucose monitoring systems available in 2008. (Ex1040, 301.) Finally, POSITAs would have been aware of a November 2008 article titled "Continuous Glucose Monitoring: The Future of Diabetes Management" by Mark Burge et al. which discussed the advantages of continuous glucose monitors, including the MinMed Paradigm REAL-Time System for patients and their utility in preventing and treating hyper and hypoglycemia. (Ex1046, 113-115.) Consequently, it is my opinion the POSITAs would have known of and investigated the MiniMed Paradigm REAL-Time as a leading continuous glucose monitoring system.

71. POSITAs would have also been aware of magazines like the American Diabetes Association's "Diabetes Forecast." An article titled "Continuous Glucose Monitoring for Kids" in the August 2007 edition of Diabetes Forecast introduced the MiniMed Paradigm REAL-Time system to POSITAs. (Ex1038.) A full page advertisement in the November 2007 edition of Diabetes Forecast also introduced the MiniMed Paradigm REAL-Time and directed POSITAs to the Medtronic Diabetes Website (www.medtronicdiabetes.com). (Ex1037, 17.) Consequently, it is my opinion the POSITAs would have known of and investigated MiniMed Paradigm REAL-Time on the Medtronic Diabetes website.

C. Patel-2009 And Paradigm® Real-Time Disclose Glucose Monitoring Systems Easily Combined, And The Motivation To Do So With An Expectation Of Success

1. Patel-2009

72. *Patel*-2009 (Ex1012) discloses a transceiver coupled to a subcutaneous glucose sensor that exchanges data with a monitor over a two-way communication link:

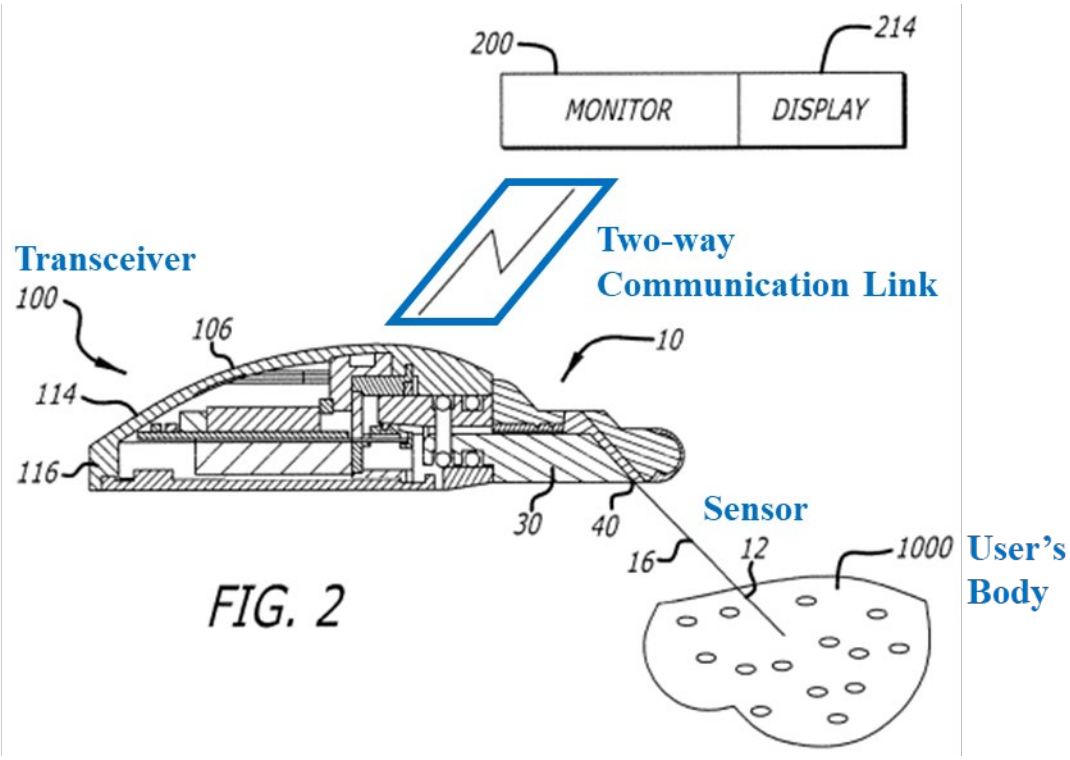

(Ex1012, [0008]-[0009], [0037], Fig. 2 (annotated in blue).) The transceiver encompasses a processor that calibrates the sensor and calculates glucose values, a memory that stores these calculated glucose values, and a battery. (Ex1012, [0008], [0013]-[0014], [0058], [0061].) The sensor set encompasses a subcutaneous sensor which monitors glucose levels by exposing electrodes to bodily fluid:

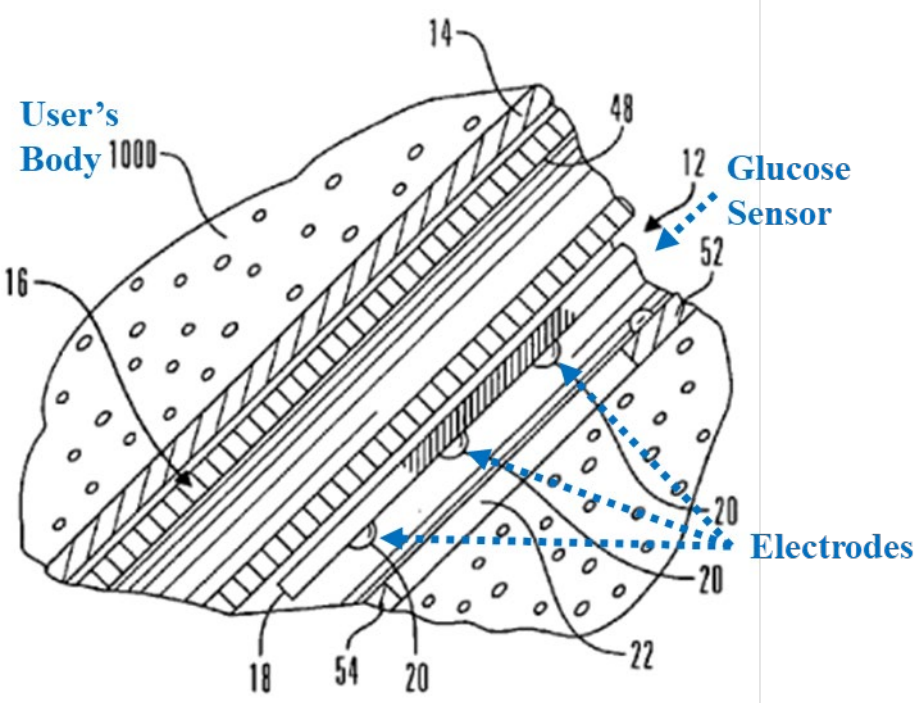

FIG. 6

(Ex1012, [0049]-[0051], Fig. 6 (annotated in blue).) The monitor displays glucose levels and trend graphs. (Ex1012, [0066].) Finally, transceiver 100 maintains two-way communication with various devices, including monitor 200, infusion pump 210, PDA 230, cellular phone 240, and blood glucose meter 250 to exchange glucose values, calibration data, and other information:

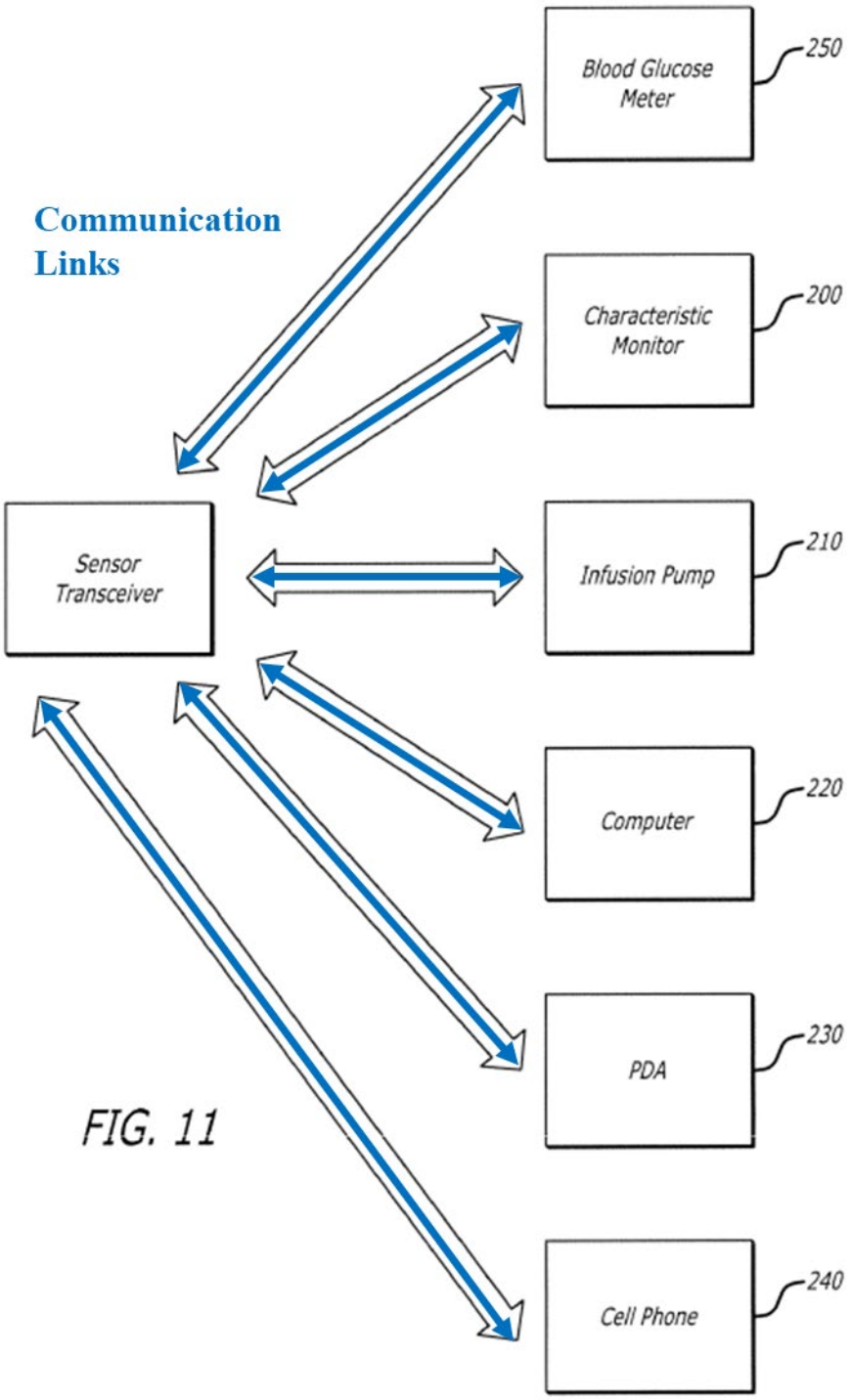

(Ex1012, [0042], [0075]-[0076], [0084], Fig. 11 (annotated in blue).)

73. Glucose values calculated during a loss of communication are synchronized from the transceiver to these remote devices when communication is re-established. (Ex1012, [0086].)

2. Paradigm® REAL-Time

74. Paradigm® REAL-Time (Ex1011) discloses a continuous glucose monitoring system comprised of Paradigm® Insulin Pump, MiniLink™ Transmitter, and glucose sensor components. (Ex1011, 9, 15, 18, 23-24, 37-38.) The glucose sensor "measures the amount of glucose in [] interstitial fluid" as an electronic signal, the MiniLink™ Transmitter "[r]eceives and processes signals from the glucose sensor and sends glucose values to the insulin pump through radio frequency (RF)," and the Paradigm® Insulin Pump displays 3 and 24-hour historical glucose graphs updated with average glucose readings every five minutes. (Ex1011, 7, 9, 15, 23-24, 64.)

75. As long as continuous glucose data is transmitted from the transmitter to the insulin pump, continuous glucose monitoring ("CGM") data is displayed on the insulin pumps screen. (Ex1011, 7-8.)

76. When loss of communication from the transmitter to the insulin pump causes failed reception of glucose data, missed data is displayed as a gap:

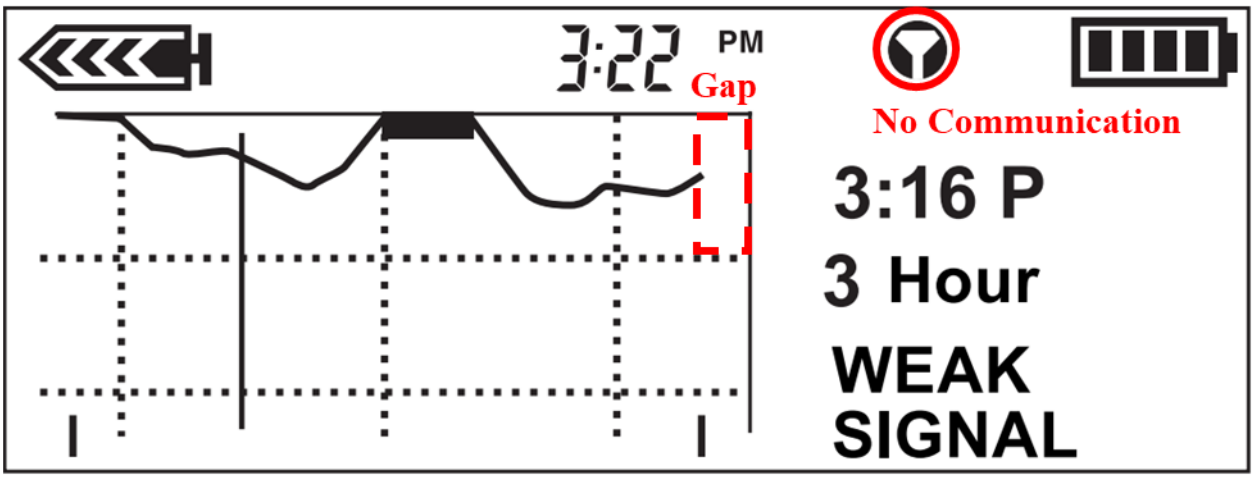

(Ex1011, 8, 43, 49, 73 (annotated in red).) The MiniLink™ Transmitter stores 40 minutes of glucose data that re-populates the insulin pump's display of continuous glucose monitoring (CGM) data following correction of failed reception (*e.g.*, when the transmitter and pump move within transmission range). (Ex1011, 8.)

3. Combination of Patel-2009 And Paradigm® REAL-Time

77. *Patel*-2009 discloses a transceiver that calculates glucose values from sensor signals and stores calculated glucose values during failed communication, a monitor the graphs glucose values received from the transceiver, and the synchronization of glucose data when communication is re-established. (Ex1012, [0042], [0066], [0086].) The *Patel*-2009/Paradigm Combination incorporates Paradigm® REAL-Time's "sophisticated network of safety checks and systems" that "detects anything unusual," including failed receipt of glucose data (*i.e.*, weak signal) and calibration errors. (Ex1011, 71-75.) The *Patel*-2009/Paradigm Combination also incorporates Paradigm® REAL-Time's display of missing "data

gaps" when glucose data is not received because the transmitter is out-of-range or transmission fails due to interference, and the re-population of these gaps with continuous glucose monitoring data stored in transmitter memory. (Ex1011 8, 10, 41, 73.)

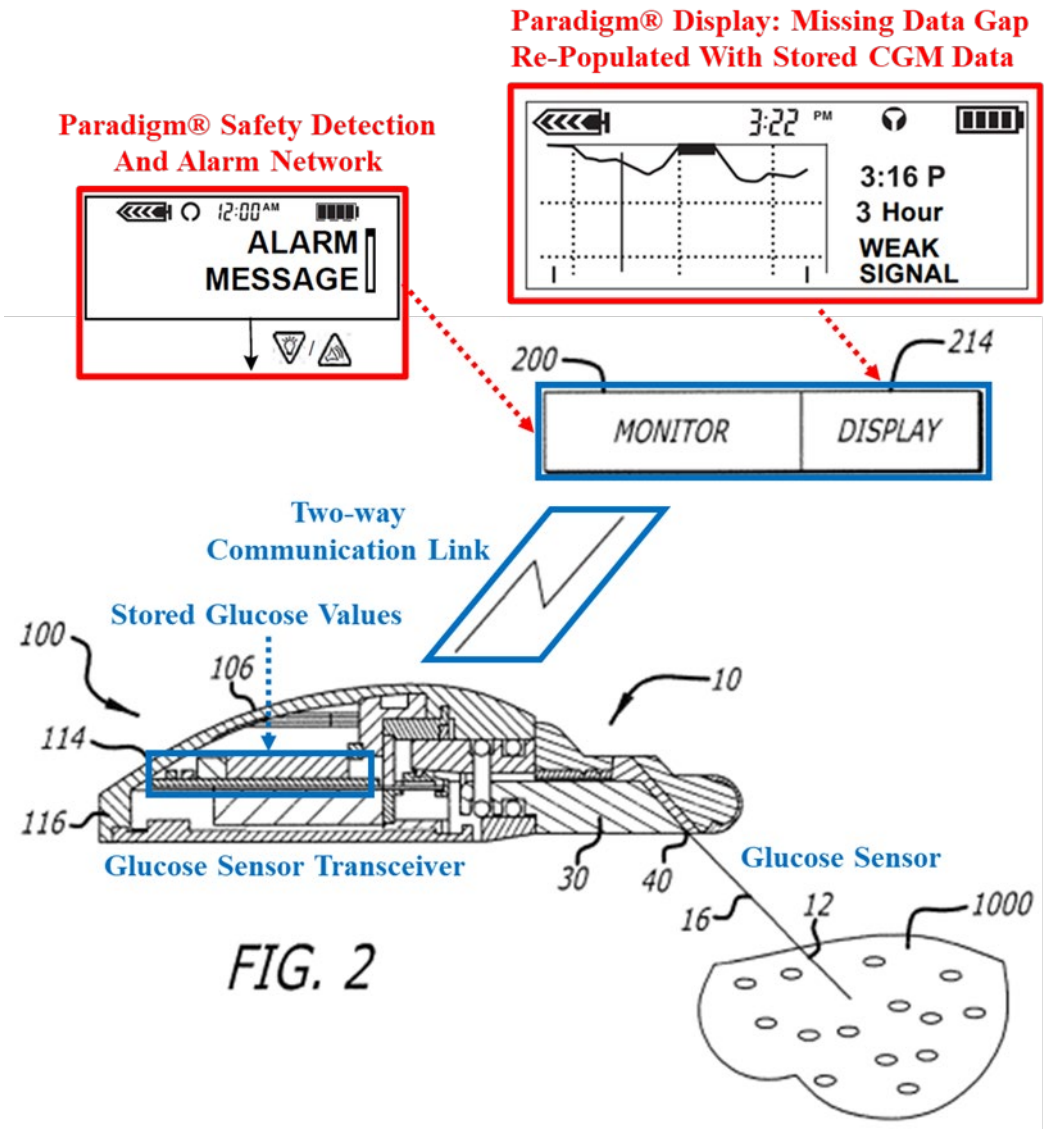

(Ex1012, Fig. 2 (annotated in blue for *Patel*-2009); Ex1011, 72-73 (excerpted and annotated in red for Paradigm® REAL-Time).) The Patel-2009/Paradigm

Combination retains the subcutaneous glucose sensor and glucose sensor transceiver from *Patel*-2009. (Ex1012, [0008], [0041], [0049], [0051], [0084], [0086].)

78. By incorporating detection and display functionalities from Paradigm® REAL-Time, the Patel-2009/Paradigm Combination results in glucose graphs that accurately display the failed reception of glucose data. (Ex1011, 8, 71, 73.) Then, when communication is re-established, the Patel-2009/Paradigm Combination re-populates gaps in continuous glucose monitoring data with glucose values synchronized from *Patel*-2009's glucose sensor transceiver. (Ex1012, [0086]; Ex1011, 8; *see also* paragraph 80 below (many diabetes would not require an insulin pump and could effectively use some of the other monitoring disclosed in *Patel*-2009 to manage their diabetes).)

4. <u>Motivation To Combine And Expectation Of Success</u>

79. *Patel*-2009 discloses displaying glucose trend graphs to a user and provides for specific advantages over previous glucose monitoring systems and pre-existing glucose sensor transmitters, including a glucose sensor transceiver that calculates and stores glucose values during failed communication (*e.g.*, when a monitoring device is not in proximity) and synchronization of calculated glucose values from the transceiver to the monitoring device when communication is re-established. (Ex1012, [0007], [0084], [0086].)

80. One purpose of continuous glucose monitoring is to assist in diabetes management, insulin dosing decisions, and prevention or treatment of hyper and hypo-glycemia by providing accurate glucose concentrations and trend information in real-time. (Ex1011, 15, 18, 23-27; Ex1012, [0004], [0006]; *see also e.g.*, Ex1029; Ex1037, 17; EXs1039-1040.) POSITAs would also know that not every diabetic would require an insulin pump but would still require a mechanism to display glucose values, and alerts/alarm to assist with diabetes management. Therefore, POSITAs would have been motivated to detect missing or inaccurate glucose data and convey as much accurate glucose information to a user as possible without providing inaccurate information. In particular, POSITAs would have been motivated to apply the advantages of *Patel*-2009 to indicate when glucose data is missing and re-populate this display with accurate data synchronized when communication is re-established following failure. (Ex1012, [0086]; *see also* paragraphs 59-60 above.)

81. POSITAs would have naturally investigated Paradigm® REAL-Time because *Patel*-2009 provides improvement to previous glucose monitoring systems, and Paradigm® REAL-Time was one of the leading continuous glucose monitoring systems of that time. (Ex1040, 301; *see* paragraphs 55, 69-71 above.) POSITAs would have been especially motivated to combine Paradigm® REAL-Time with *Patel*-2009 because they both relate to similar Medtronic continuous glucose

monitoring systems as evidenced by their visual similarity and common citation to Medtronic's U.S. Patent No. 6,554,798. (Ex1012, [0068]-[0069], Fig. 1; Ex1011, 32.)

82. For example, *Patel*-2009 and Paradigm® REAL-Time both relate to Medtronic continuous glucose monitoring systems that use radio frequency communication to transmit glucose data measured by a subcutaneous sensor. (*See* paragraphs 72, 74 above.) POSITAs reviewing *Patel*-2009 would have been directed to incorporate U.S. Patent 6,554,798, which is cited in Paradigm® REAL-Time:

> © 2006, Medtronic MiniMed. All rights reserved.
> This product is covered by U.S. Patent Nos. 6,551,276; 6,554,798; 6,872,200; 6,936,029; 6,979,326; 6,997,920 and 7,025,743.
> Other U.S. and/or foreign patents may be pending.

(*Compare* Ex1012, [0069] *with* Ex1011, 32.) For example,

83. POSITAs would have also noticed similarities between the Glucose Sensor Transceiver in *Patel*-2009 and the MiniLink™ Transmitter in Paradigm® REAL-Time:

Glucose Sensor Tranceiver	MiniLink™ Transmitter
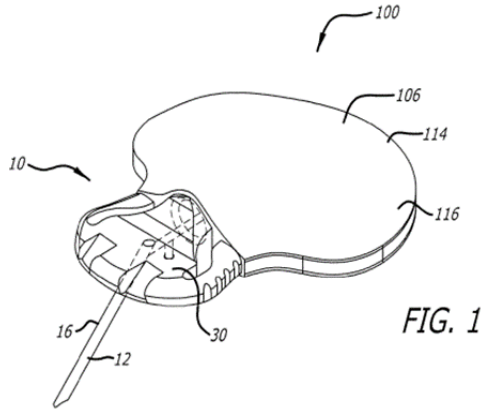	
(Ex1012, Fig. 1)	(Ex1011, 30.)

84. *Patel*-2009 describes improving pre-existing transmitters to provide many advantages, including faster and more frequent calibration, more calculated glucose data points, and networking with more devices. (Ex1012, [0007], [0084]-[0085].) POSITAs would have been motivated to make these improvements.

85. POSITAs would have expected success because *Patel*-2009 discloses specific improvements over previous glucose monitoring systems like Paradigm® REAL-Time. (Ex1012, [0007], [0084]-[0086].) POSITAs would have known how to modify *Patel*-2009 to perform functions of Paradigm® REAL-Time, including by modifying the programing of *Patel*-2009's monitor or by importing programs from the Paradigm® Insulin Pump. (*See* paragraphs 56-57 above.)

D. Ground 1 Claim Mappings

86. It is my opinion that the *Patel*-2009/Paradigm Combination renders obvious claims 1-3, 5-8, 11-12, 17-24, 26-28 and 30, as set out below.

1. Claim 1

a) [1.A] (preamble)

A glucose monitoring system for backfilling data gaps that occur while a user monitors glucose levels, the glucose monitoring system comprising:

87. *Patel*-2009 and Paradigm® REAL-Time both disclose CGM systems that display glucose levels to a user. (Ex1012, [0042], [0066]; Ex1011, 15, 23-24, 37-38, 64.)

88. Paradigm® REAL-Time discloses graphs that display sensor glucose data points. (Ex1011, 64.) When glucose data is not received, these graphs display a corresponding gap in glucose values:

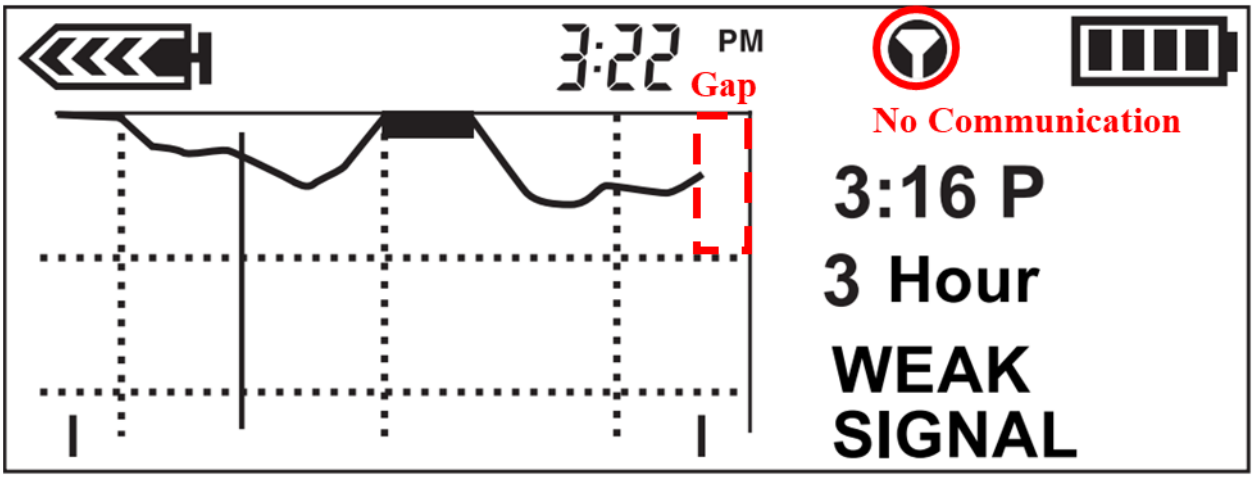

(Ex1011, 73 (excerpted and annotated in red).) If failed reception persists for the 5 to 40-minute "Missed Data" period, a Weak Signal alarm is triggered to indicate that the "Sensor [is] too far away from [the] pump:"

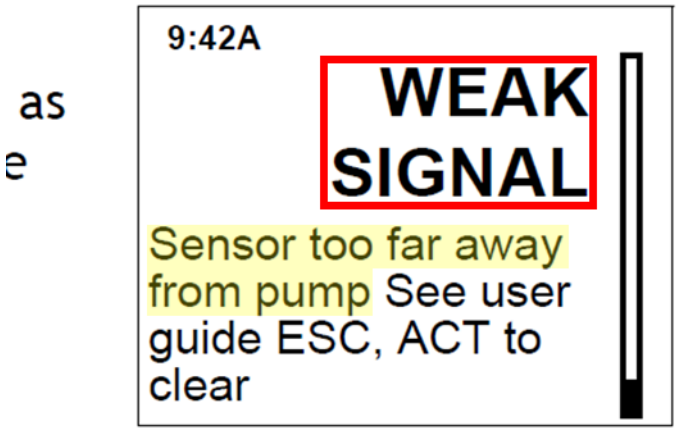

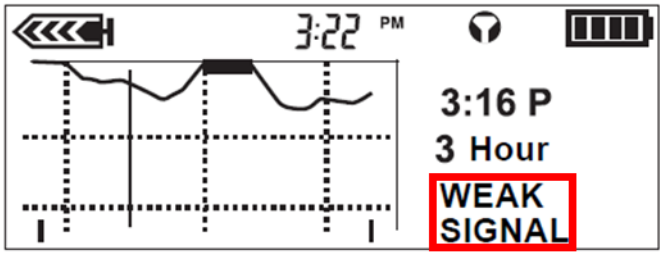

(Ex1011, 49, 73 (excerpted, annotated in red, and heighted).)

89. A Weak Signal alarm and corresponding missing data gap occur when the "[t]ransmitter and insulin pump are too far apart" for wireless transmission. (Ex1011, 8.) When out-of-range, the "transmitter holds 40 minutes worth of memory, so … continuous glucose monitoring (CGM) data can be re-populated in the insulin pump." (Ex1001, 8.) CGM data re-populates the last 40 minutes of missing glucose data so that gaps only remain in historical reports if the transmitter and pump are "out-of-range for longer than 40 minutes." (Ex1001, 8, *see* paragraphs 112, 114-115 below.)

b) [1.B]

a glucose sensor, a portion of which is configured to be positioned under skin of the user, wherein the glucose sensor is configured to sample a biological fluid of the user to provide sensor data;

90. *Patel*-2009 discloses percutaneous sensor set 10 with electrode-type sensor 12 placed below the skin in a user's body 1000:

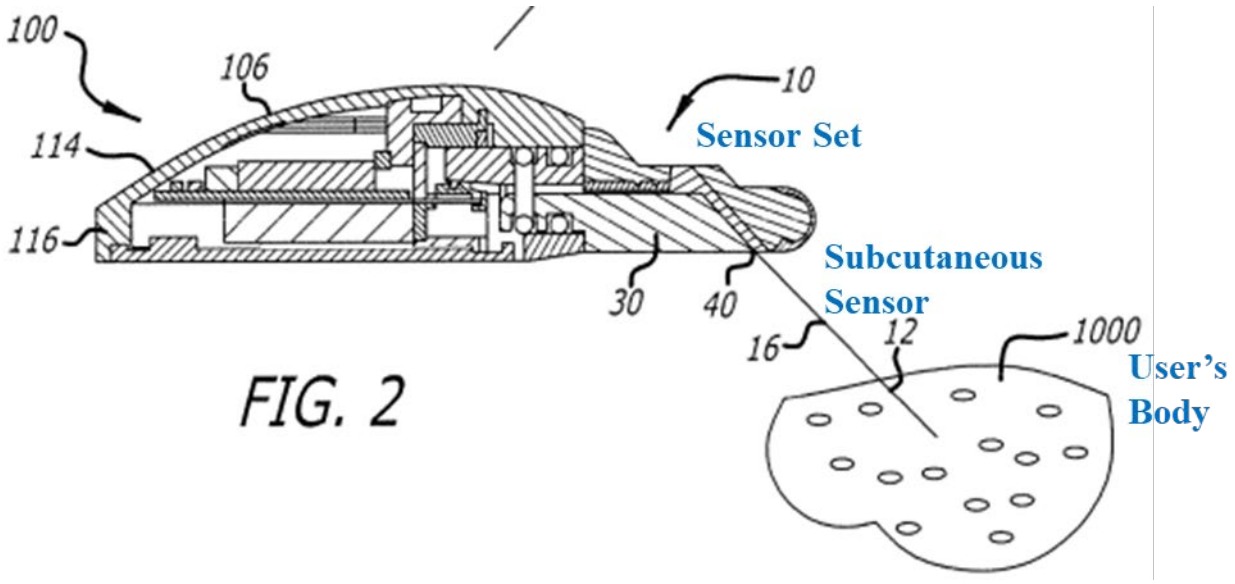

(Ex1012, [0041], [0049], Fig. 2 (annotated in blue).) Sensor 12 produces signals indicative of monitored glucose levels by exposing sensor electrodes 20 to the user's bodily fluids:

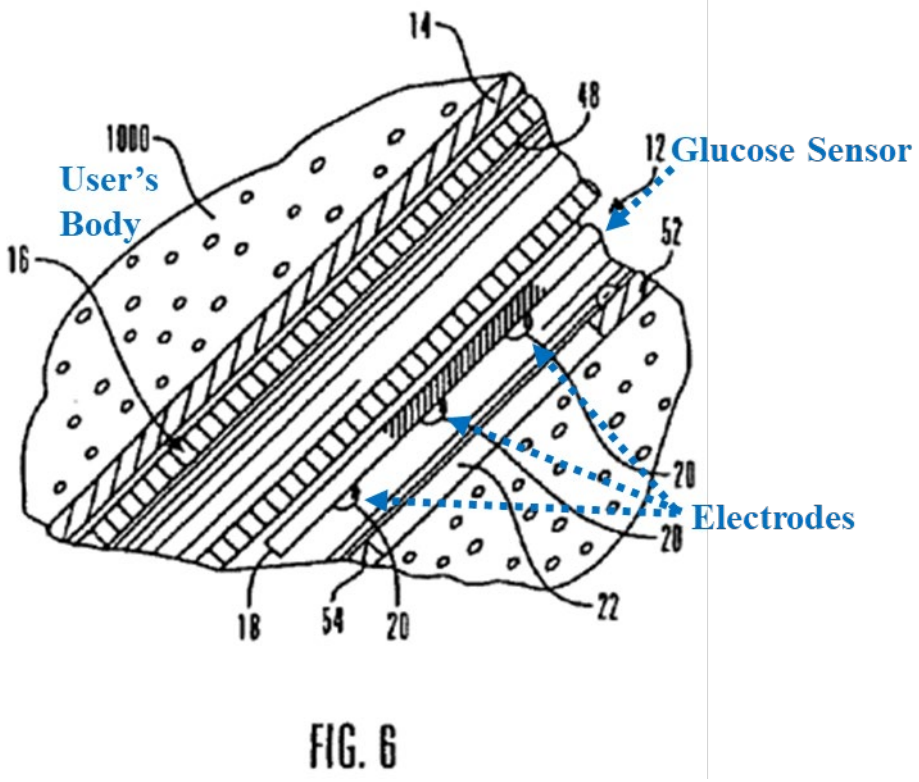

(Ex1012, [0008], [0038], [0049], [0051], Fig. 6 (annotated in blue).)

91. Paradigm® REAL-Time also discloses a glucose sensor that "continuously measures glucose from [] subcutaneous tissue as an electronic signal." (Ex1011, 38.) This sensor is inserted through the skin, and "sends an electronic signal measuring the amount of glucose in [] interstitial fluid." (Ex1011, 23.) The sensor current signal ("Isig") is reported in units of nanoamperes (nA) of current, for example 123.45 nA:

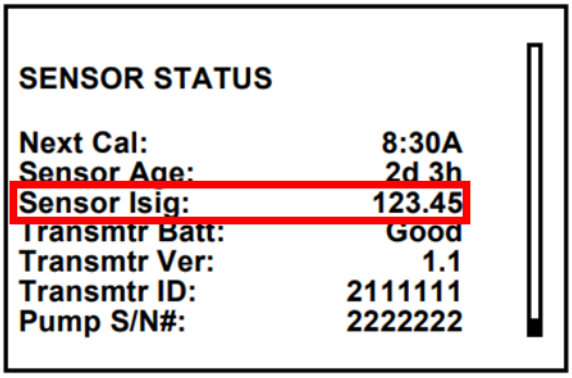

(Ex1011, 63, 80 (excerpted and annotated in red).)

c) [1.C]

a data processing and transmitter unit coupled to the glucose sensor, the data processing and transmitter unit comprising a power supply, a processor of the data processing and transmitter unit, memory of the data processing and transmitter unit, and a radio frequency transceiver of the data processing and transmitter unit, wherein the data processing and transmitter unit is configured to:

92. *Patel*-2009 discloses that "sensor set 10 is connected to the telemetered characteristic sensor transceiver 100, so that the sensor 12 can be used" for taking glucose readings. (Ex1012, [0072].) Figure 8A illustrates transceiver 100 coupled to sensor set 10:

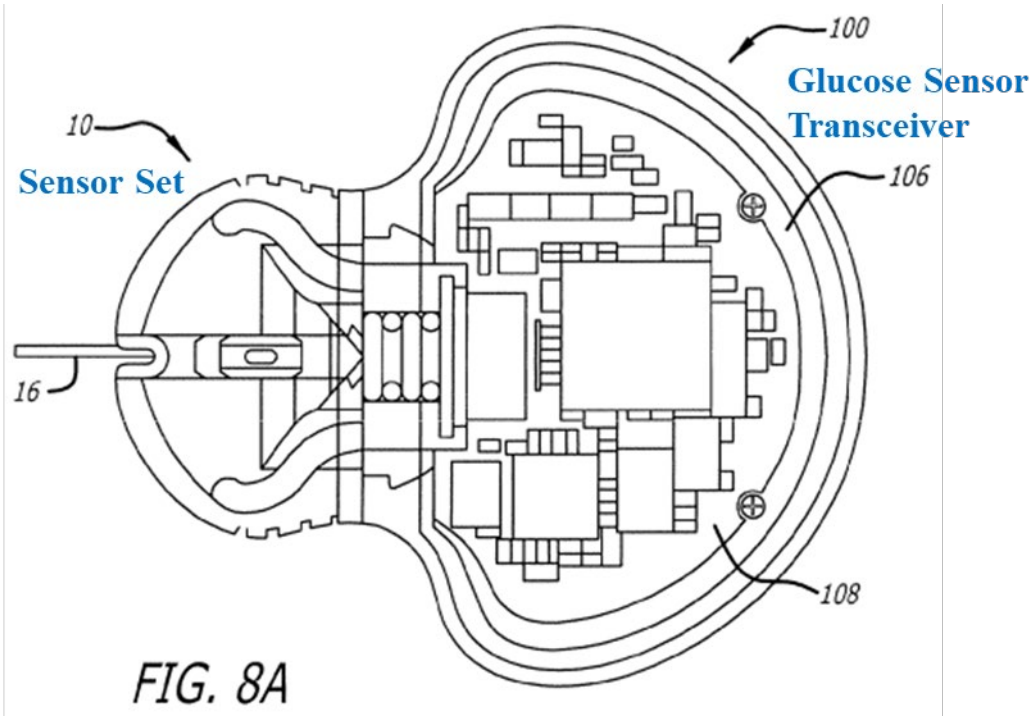

(Ex1012, 0056, Fig. 8A (annotated).) The glucose sensor transceiver comprises:

> a processor formed within the housing and in communication with the sensor for processing the signal produced by the sensor, a transmitter coupled to the processor for transmitting data to at least one remote device, a receiver coupled to the processor for receiving data from the at least one remote device, and a memory coupled to the processor for storing data.

(Ex1012, [0008].) The transmitter and receiver comprise an RF Transceiver. (Ex1012, [0058]; *see* paragraph 61 above.) The glucose transceiver also includes a battery. (Ex1012, [0058].)

93. Paradigm® REAL-Time also discloses that the MiniLink™ Transmitter connects with a glucose sensor, has a rechargeable battery, and has memory that stores 40-minutes of glucose monitoring data. (Ex1011, 8, 37, 51.)

d) [1.D]

receive the sensor data from the glucose sensor and store the sensor data in the memory of the data processing and transmitter unit; process the sensor data using calibration data to provide processed sensor data, wherein the calibration data comprises data associated with a sensitivity of the glucose sensor, and wherein the processed sensor data is stored in the memory of the data processing and transmitter unit; and

94. *Patel*-2009 provides that the transceiver "perform[s] data calibration and sensor glucose value calculation" to "convert raw sensor signals into calibrated processed glucose values using algorithms stored in the sensor transceiver." (Ex1012, [0042], [0084], [0090].) The transceiver "calibrate[s] the sensor's readings" with "calibration data" received from a remote device (*e.g.*, readings from a blood glucose meter). (Ex1012, [0042], [0064], [0081], [0084].) Calibration is performed by running filtering and calibration algorithms. (Ex1012, [0076].) Following calibration, *Patel*-2009 discloses that the transceiver "appropriately calculate[s] sensor glucose values using the calibrated sensor readings." (Ex1012, [0084]; *see also* Ex1023 (*Shahmirian* discloses an plethora of implementation of for the calibration algorithms).) The transceiver logs calculated glucose values and stores them in memory as glucose history. (Ex1012, [0013], [0047], [0081], [0083], [0086].)

95. The processor in *Patel*-2009 necessarily stores sensor data in memory at least during filtering, calibration, and calculation because POSITAs would

understand that the transceiver's processor stores sensor data in memory (*e.g.*, processor cache, buffer, RAM) while filtering sensor signals, calibrating sensor readings, and calculating glucose values from calibrated sensor readings. (*See* paragraphs 41-46 above; *see also* Ex1023 (*Shahmirian* discloses a plethora of routines for processing signal, data, and calculated values); Ex1026 (Steil also discloses a variety of processing routines relevant to continuous glucose monitoring).)

96. Paradigm® REAL-Time discloses a calibration algorithm that uses meter blood glucose reference values (*i.e.*, meter BG) to "align[] the glucose sensor … so that continuous glucose monitoring (CGM) readings are representative of [] blood glucose level." (Ex1011, 10, 37, 61-62, 75, 83.) Glucose values are calculated following calibration. (Ex1011, 61.)

97. Therefore, *Patel*-2009 and Paradigm® REAL-Time render obvious processing sensor signals with calibration data associated with sensor sensitivity (*see* paragraphs 94, 96 above) because POSITAs would understand that calibration uses reference data (*e.g.*, blood glucose reference values) to determine the sensor's sensitivity coefficient based on the ratio of sensor current to blood glucose concentration. (*See* paragraphs 37-40, 54 above.) Glucose levels are then calculated by dividing sensor current signals (*i.e.*, Isig) by the sensitivity coefficient. (*See* paragraphs 37-40, 54 above.)

e) [1.E]

transmit the processed sensor data over a Bluetooth wireless communication link using the radio frequency transceiver of the data processing and transmitter unit; and

98. *Patel*-2009 provides that the transceiver transmits calculated glucose values to a monitor and other devices. ([Ex1012, [0008], [0013], [0042], [0076].) The transceiver exchanges information over two-way wireless communication links:

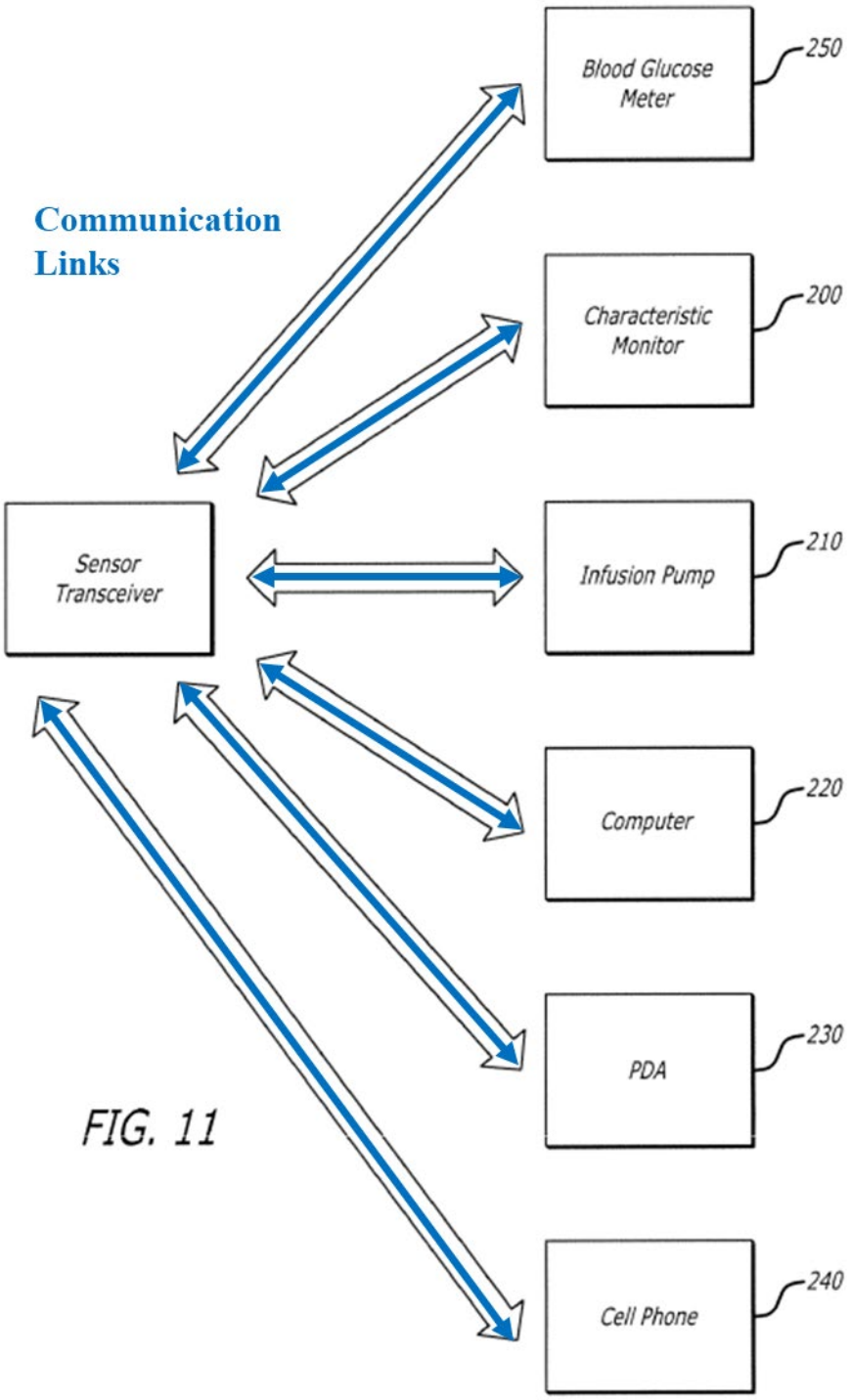

(Ex1012, [0076], Fig. 11 (annotated in blue).) The rate, frequency, and other attributes of communication links are configured according to configuration data exchanged with remote devices. (Ex1012, [0012], [0082].)

99. Paradigm® REAL-Time supplements *Patel*-2009 by disclosing that the MiniLink™ Transmitter sends processed "glucose values to the insulin pump" using radio frequency transmission with a six-foot range. (Ex1011, 8, 23, 51.)

100. POSITAs would have found it obvious to configure communication links to use Bluetooth protocols for communication with computers, PDAs, and cell phones disclosed in *Patel*-2009 and as a "short-range cable replacement for device-to-device connections" with the six-foot transmission range disclosed in Paradigm® REAL-Time in order to extend compatibility, operating range, and/or usability of the system via a standardized, well-established wireless communication protocol. (*See* paragraphs 47-49, 54 above.)

f) [1.F]

a receiver unit comprising a processor of the receiver unit, memory of the receiver unit, a radio frequency transceiver of the receiver unit, an antenna, and a display, wherein the receiver unit is configured to: receive, using the antenna and the radio frequency transceiver of the receiver unit, the processed sensor data over the Bluetooth wireless communication link,

101. *Patel*-2009 discloses transmission of glucose data over two-way communication links to various devices with a display (*e.g.*, Fig. 2, display 214) used to display glucose measurements, including infusion pumps, monitors, personal computers, PDAs, and cellular phones. (Ex1012, [0042], [0066], [0076], Figs. 2, 11; *see also* paragraph 98 above.)

102. Paradigm® REAL-Time also discloses that the insulin pump has a screen that displays glucose values sent from the MiniLink™ Transmitter and a sophisticated network of systems, including on-board data management software, the capacity to be programmed, and memory that stores 90 days of glucose data. (Ex1011, 7-8, 23-26, 37, 43-50, 71.)

103. *Patel*-2009 discloses various receivers with a processor, and transceiver/antenna that receive glucose values. (*See* paragraphs 56, 61 above; *see also* paragraphs 206-207 below.) For example, *Patel-2009* discloses exchanging data over a wireless connection and maintaining two-way communication links between a transceiver and other devices, such as a personal computer, personal digital assistant (PDA), monitor, or the like. (Ex1012, [0043], [0045]). POSITAs would recognize that two-way wireless communication requires a transceiver and that devices (*e.g.*, PDAs, cellular phones, monitors, infusion pumps) receive communications with an antenna and transceiver. (*See* paragraph 61 above, *see also* paragraph 206 below (noting that *Shahmirian* (Ex1023) discloses an infusion pump with a transceiver, antenna, and processor).) POSITAs would also recognize that these devices have a processor, which is necessary for communication, processing, and data management functions. (*See* paragraph 51 above, *see also* paragraphs 206-207 below (noting that *Causey* (Ex1017) discloses a monitor/PDA with a processor).)

104. Additionally, POSITAs would have found it obvious to configure communication links to use Bluetooth. (*See* paragraphs 47-49, 54 above; *see* also paragraph 100 above.)

g) [1.G]

output to the display of the receiver unit, a numerical value representing the processed sensor data,

Paradigm® REAL-Time discloses display of numerical sensor glucose values:

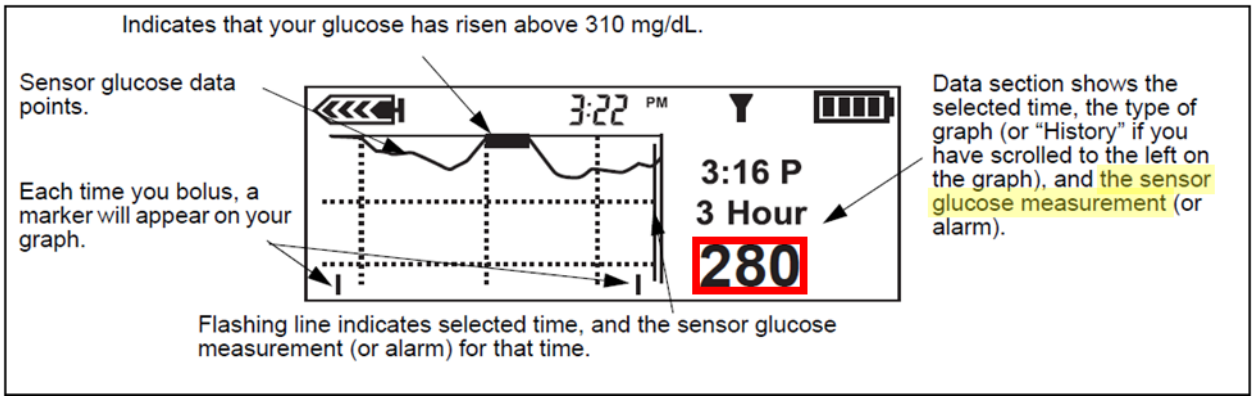

(Ex1011, 64 (excerpted, annotated in red, and highlighted).)

105. *Patel*-2009 also discloses disclosing that the monitor displays glucose levels received from the sensor. (Ex1012, [0047], [0066].)

h) [1.H]

output to the display of the receiver unit, a first line graph that is a substantially continuous depiction of the processed sensor data over time,

106. Paradigm® REAL-Time discloses display of 3 and 24-hour glucose graphs with average sensor glucose values that update every five minutes:

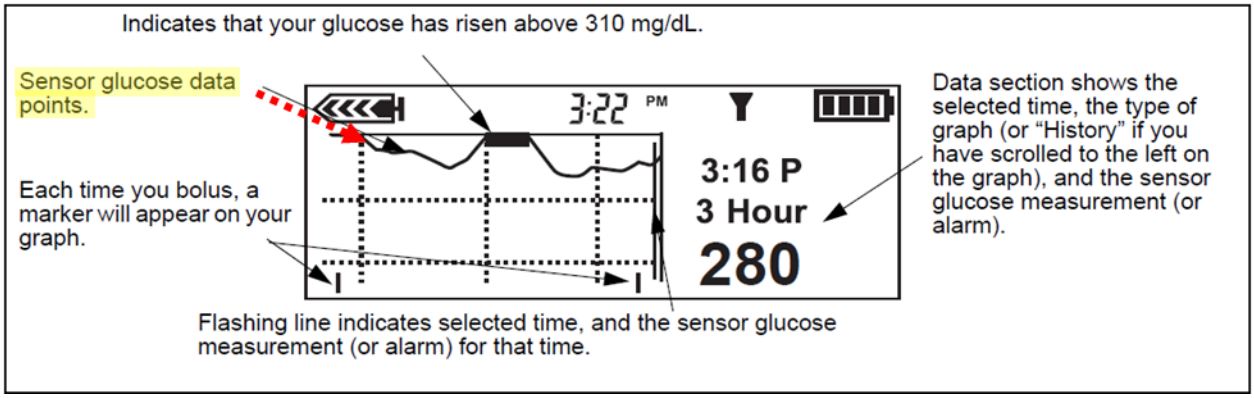

(Ex1011, 7, 24, 64-65 (excerpted, annotated in red, and highlighted).)

107. *Patel*-2009 also discloses that the monitor displays glucose trends and graphs. (Ex1012, [0047], [0066].)

i) [1.I]

wherein the glucose monitoring system is configured to detect an adverse condition, wherein the adverse condition results in the receiver unit displaying a data gap such that the first line graph displayed on the receiver unit has an end corresponding to a time associated with a start of the adverse condition;

108. Paradigm® REAL-Time discloses "a sophisticated network of safety checks and systems" that "detects anything unusual" and notifies of conditions requiring immediate attention, including weak signals and calibration errors.

(Ex1011, 71, 73-76.) For example, an ( ) icon changes to an ( ) icon when "the sensor is connected to the transmitter and [was] communicating with the pump" but this communication has been lost. (Ex1011, 43.) Lost communication causes "failed reception of continuous glucose monitoring (CGM) data." (Ex1011, 8.)

109. "[W]hen the pump does not receive data," the graph displays a "data gap:"

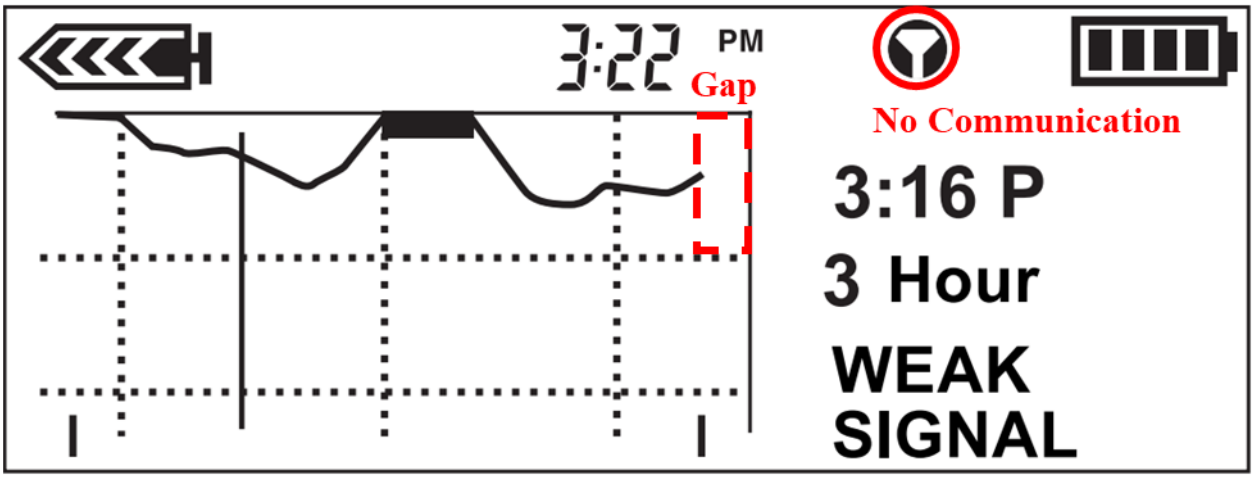

(Ex1011, 8, 73 (excerpted and annotated in red).) If failed reception persists for 5-40 minutes as set in Missed Data, a "Weak Signal" alarm is triggered and shown on the graph "along with the time of the alarm:"

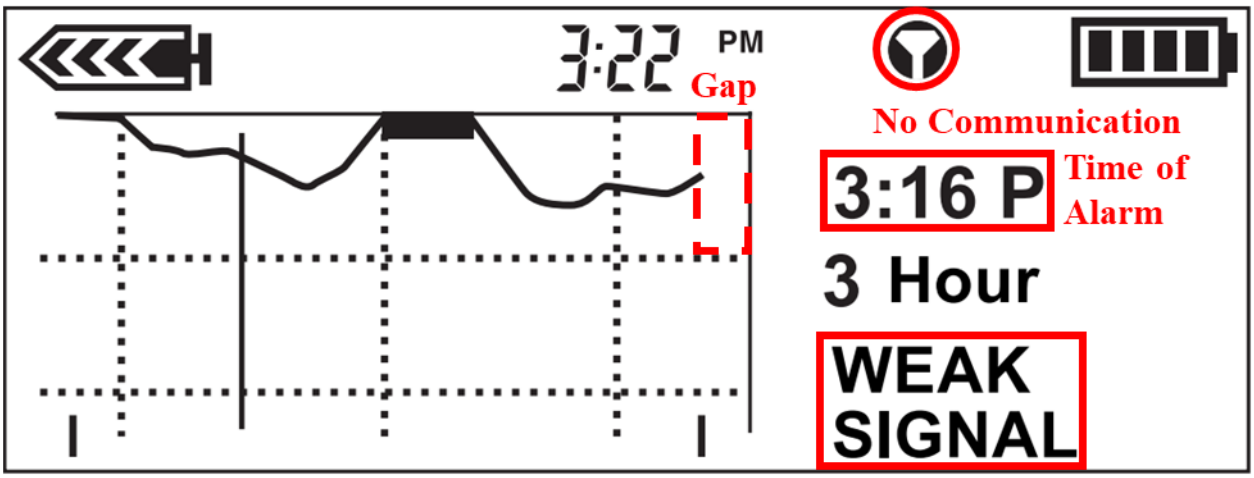

(Ex1011, 8, 49-50, 67, 73 (excerpted and annotated in red).) A "Lost Sensor" alarm is triggered after 40 minutes. (Ex1011, 73.) The data gap corresponds with failed reception of glucose data, including the period (*e.g.*, 10 minutes) before a Weak Signal alarm is triggered. (Ex1011, 8, 73.)

j) [1.J]

wherein, during a time period corresponding to the adverse condition, sensor data, processed sensor data, or both, are stored in the memory of the data processing and transmitter unit;

110. Paradigm® REAL-Time provides that the MiniLink™ Transmitter holds 40-minutes of glucose data in memory when the transmitter and insulin pump are out-of-range. (Ex1011, 8.)

111. *Patel*-2009 also discloses that the transceiver continues to calculate glucose data points during a communication failure and stores glucose history information. (Ex1012, [0086].)

k) [1.K]

wherein the receiver unit is configured to output to the display, after the adverse condition is corrected, processed sensor data for the time period corresponding to the adverse condition such that the data gap is backfilled, and

112. Paradigm® REAL-Time discloses that when the transmitter and insulin pump are out of transmission range, the "transmitter holds 40 minutes worth of memory, so … continuous glucose monitoring (CGM) data can be re-populated in the insulin pump." (Ex1011, 8.) If the "[t]ransmitter and insulin pump are out-of-range for longer than 40 minutes, only the last 40 minutes will be re-populated" and a data gap will persist for the remaining. (Ex1011, 8.) Thus, when the transmitter and insulin pump are out-of-range for less than 40 minutes (*e.g.*, a 30-minute swim), data gaps do not persist because they are entirely re-populated once transmission is re-established after being lost. (Ex1011, 8; *see also* paragraph 60 above (POSITAs would find it obvious to re-populate missing analyte data when it becomes available after failed communication is resolved).)

113. *Patel*-2009 supplements Paradigm® REAL-Time by disclosing that glucose values calculated during failed communication are synchronized from the transceiver to the monitoring device (*e.g.*, infusion pump) when communication is re-established after being lost. (Ex1012, [0086].)

l) **[1.L]**

wherein the processed sensor data for the time period corresponding to the adverse condition that is outputted to the display after the adverse condition is corrected comprises a second line graph having a first end corresponding to the time associated with the start of the adverse condition and a second end corresponding to a time associated with an end of the adverse condition.

114. Paradigm® REAL-Time illustrates a 3-hour glucose graph with a data gap during "failed reception of sensor data from the transmitter to the pump" while "communication is lost:"

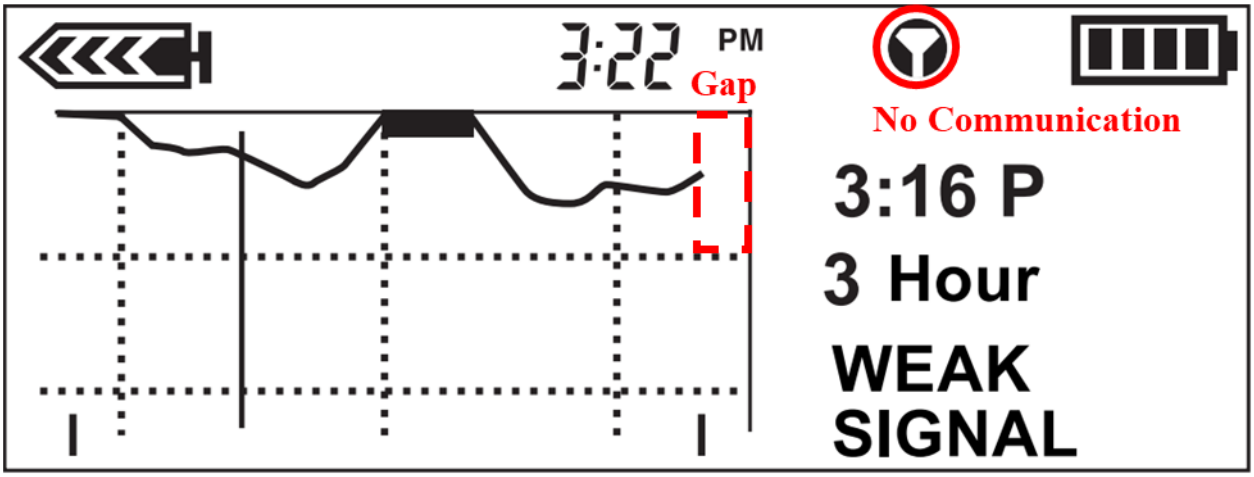

(Ex1011, 43, 49, 73 (excerpted and annotated in red); *see* paragraph 109 above.)

115. A 3-hour graph is also illustrated plotting the same glucose data without a data gap and while the transmitter is communicating with the pump:

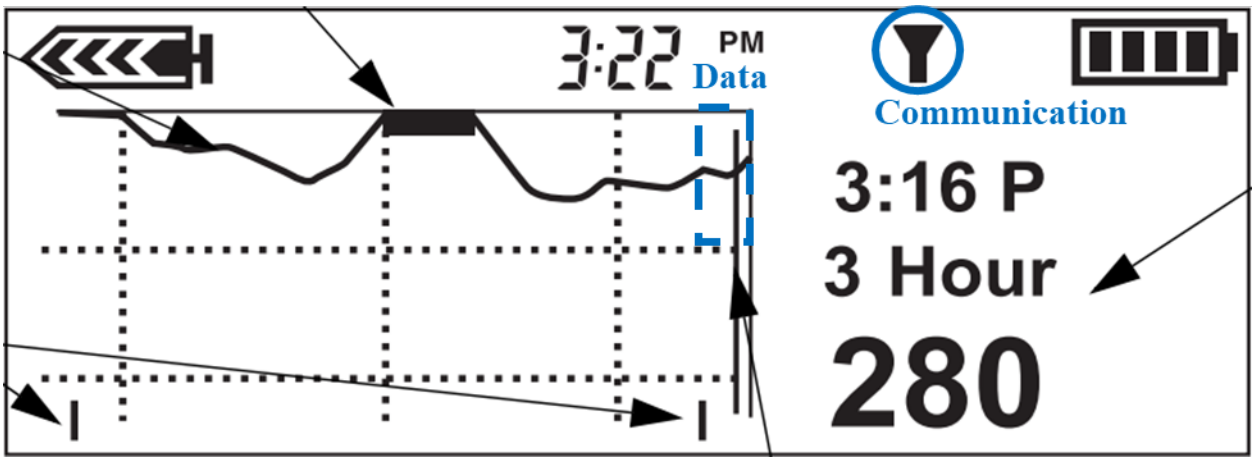

(Ex1011, 43, 64 (excerpted and annotated in blue); *see also* paragraph 106 above.) Paradigm® REAL-Time discloses re-populating data gaps with glucose data stored in the transmitter's memory. (Ex1011, 8; *see also* paragraph 112 above.) Comparing these two graphs, POSITAs would recognize that a data gap existing during reception failure is re-populated once communication is re-established:

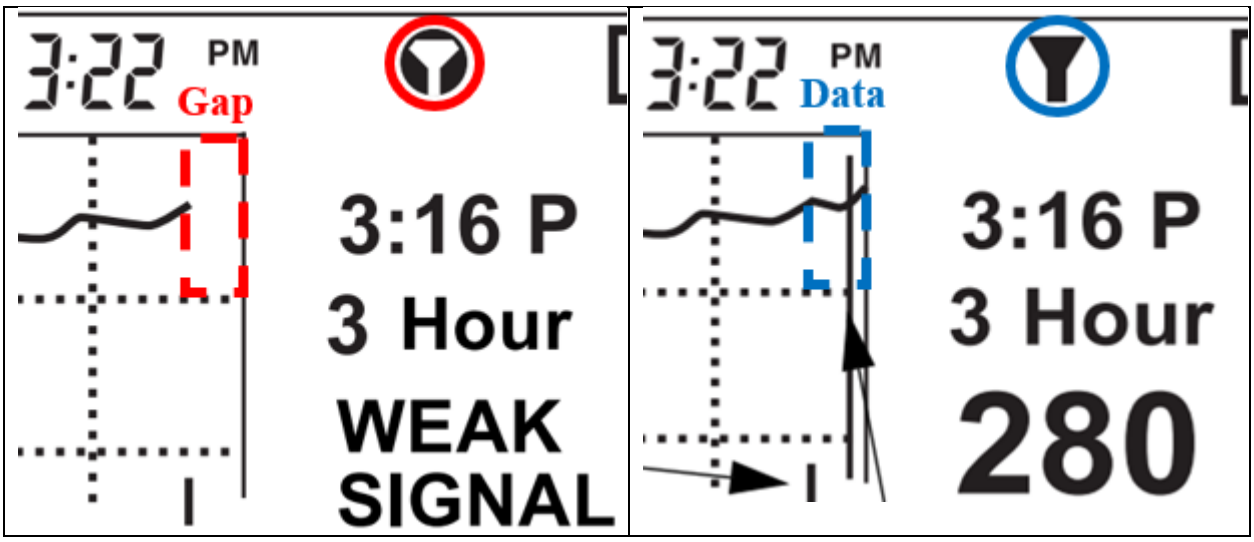

(Ex1011, 64 (excerpted and annotated in blue), 73 (excerpted and annotated in red); *see also* paragraph 60 above (POSITAs would find it obvious to re-populate missing analyte data when it becomes available to fill-in/re-populated data gaps).) This re-

populated data comprises a line from the beginning to the end of the data gap. (Ex1011, 64, 73.)

2. Claim 2

> The glucose monitoring system of claim 1, wherein the first line graph and the second line graph are outputted to a same graph comprising a first axis having a time unit of measurement and a second axis having a glucose concentration unit of measurement.

116. Paradigm® REAL-Time discloses displaying graphs with glucose concentration on the vertical axis against 3 or 24-hours on the horizontal axis:

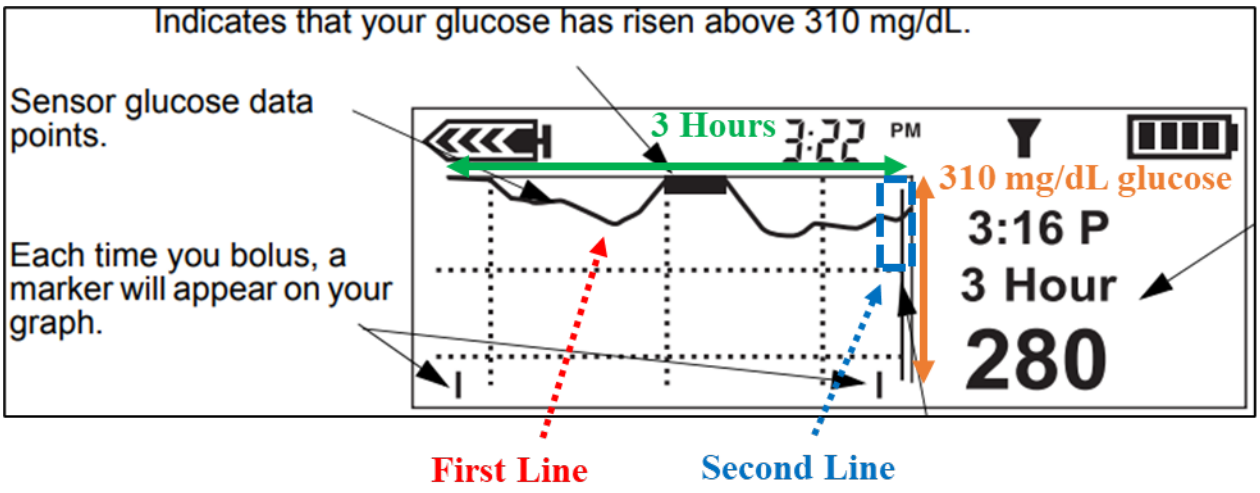

(Ex1011, 64 (excerpted and annotated in red, blue, green, and orange); *see also* paragraph 106 above.) Re-populated glucose data (*i.e.*, the second line) is output to the same graph as original glucose data (*i.e.*, the first line). (*See* paragraph 115 above.)

3. Claim 3

> The glucose monitoring system of claim 1, wherein the adverse condition comprises a sensor communication error.

117. An ( ) icon changes to an ( ) icon when the sensor and transmitter are connected, and communication with the pump has been lost. (Ex1011, 43; *see* paragraph 108 above.) Communication is lost with both the transmitter and with the sensor. (Ex1011, 43; *see also* paragraph 58 above.) Failed reception of glucose data results in a missing data gap and, eventually, a weak signal alarm. (Ex1011, 8, 73; *see* paragraphs 76, 109 above.)

118. Alternatively, if the term "sensor" is used to indicate the glucose sensor and transmitter collectively, a failed communication between the transmitter and the pump is also failed communication with the collective "sensor." (*See* paragraph 58 above (discussing a communication error with various system components).) But if the term "sensor" only indicates the glucose sensor, then *Causey* discloses displaying updated glucose values following faulty or interrupted glucose readings. (*See* paragraphs 143, 157 below.)

4. Claims 5 and 6

> [Claim 5] The glucose monitoring system of claim 1, wherein the adverse condition comprises a signal error associated with the data processing and transmitter unit.

[Claim 6] The glucose monitoring system of claim 1, wherein the adverse condition comprises a signal error associated with the receiver unit.

119. An ( ) icon following an ( ) icon indicates that the pump has lost communication with the transmitter. (Ex1011, 43; *see* paragraph 108 above.) This loss of communication results in a missing data gap and, eventually, a Weak Signal alarm indicating "failed reception of sensor data from the transmitter to the pump." (Ex1011, 8, 49, 73; *see* paragraph 76, 109 above.) Paradigm® REAL-Time discloses failed communication when the transmitter and pump are out of wireless transmission range and when devices (*e.g.*, cell phones, wireless networks) "interfere with [the] transmitter signal." (Ex1011, 8, 10, 41.) Out-of-range, interference, and other communication failures are associated with both the transmitter (transmission failure) and the pump (reception failure). (*See* paragraph 58 above.) Additionally, POSITAs would recognize signal errors associated with both the transmitter and pump as obvious causes of missing glucose data. (*See* paragraph 58 above.)

5. <u>Claim 7</u>

The glucose monitoring system of claim 1, wherein the adverse condition comprises a system malfunction associated with the data processing and transmitter unit or a system malfunction associated with the receiver unit.

120. Out-of-range, interference, and other problems with communication, transmission, and/or reception are malfunctions that result in missing glucose data. (*See* paragraph 58, 119 above.) Additionally, POSITAs would recognize transmitter

and receiver malfunctions as an obvious cause of missing glucose data. (*See* paragraph 58 above.)

6. Claim 8

The glucose monitoring system of claim 1, wherein the adverse condition comprises an inability of the receiver unit to display or output at least a portion of the first line graph.

121. Paradigm® REAL-Time discloses displaying a gap when the pump does not receive glucose data (Ex1011, 8, 73) because data cannot be displayed unless received. (*See* paragraph 58 above, *see also* paragraph 125 below.) Additionally, POSITAs would recognize failed reception of glucose data as an obvious cause of the inability to display this data. (*See* paragraph 58 above.)

7. Claim 11

The glucose monitoring system of claim 1, wherein the adverse condition comprises a monitoring system failure condition.

122. *Patel*-2009 and Paradigm® REAL-Time both disclose monitoring systems composed of a glucose sensor, transceiver, and monitor (*e.g.*, pump). (*See* paragraphs 72, 74 above.) Therefore, problems with the sensor, transceiver, and/or monitor that result in failed reception of glucose data are system failures. (*See* paragraphs 58, 117-119 above.)

123. Alternatively, POSITAs would recognize monitoring system failures as an obvious cause of missing glucose data. (*See* paragraph 58 above.)

8. Claim 12

[12] The glucose monitoring system of claim 1, wherein the glucose sensor comprises a working electrode and a counter electrode.

124. *Patel*-2009 discloses an electrode-type sensor 12 with sensor electrodes 20:

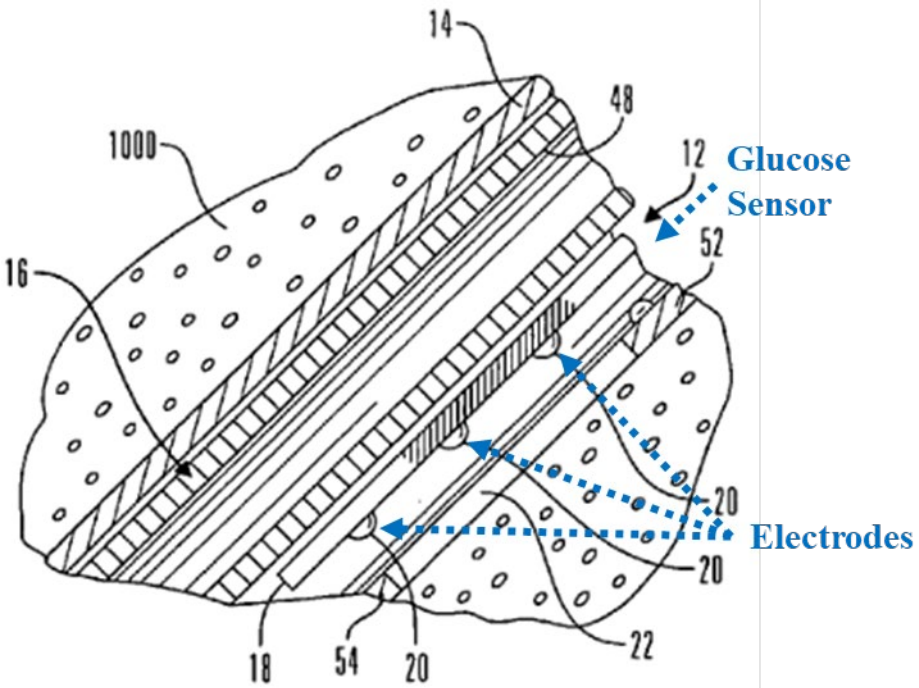

FIG. 6

(Ex1012, [0041], [0049], [0051], Fig. 6 (annotated in blue).) Additionally, analyte sensors with working and counter electrodes were well known and are provided as background to the ’056 patent. (*See* paragraphs 32-36 above.) Considering these disclosures, POSITAs would recognize electrodes 20 to include a working and counter electrode. (*See* paragraphs 32, 36, 54 above.)

9. Claim 17

The glucose monitoring system of claim 1, wherein the adverse condition comprises a data unavailability condition.

125. Paradigm® REAL-Time discloses displaying a gap when the pump does not receive glucose data (Ex1011, 8, 73) because data is unavailable for display unless received. (*See* paragraph 58 above, *see also* paragraph 121 above.) Additionally, POSITAs would recognize failed reception of glucose data as an obvious cause of data unavailability. (*See* paragraph 58 above.)

10. Claim 18

The glucose monitoring system of claim 1, wherein the receiver unit is further configured to display the second line graph immediately after the correction of the adverse condition.

126. *Patel*-2009 discloses glucose data is synchronized from the transceiver to the monitoring device (*e.g.*, infusion pump) "when communication is re-established" after being lost. (Ex1012, [0086].) POSITAs would have found it obvious to display glucose data when received. (*See* paragraph 60 above.)

11. Claim 19

The glucose monitoring system of claim 1, wherein the receiver unit is further configured to wait a predetermined period of time after the correction of the adverse condition before displaying the second line graph.

127. Paradigm® REAL-Time discloses updating glucose data every five minutes with a five-minute average. (Ex1011, 7, 24, 83; *see also* paragraph 75, 106 above.) This results in display of an update lag:

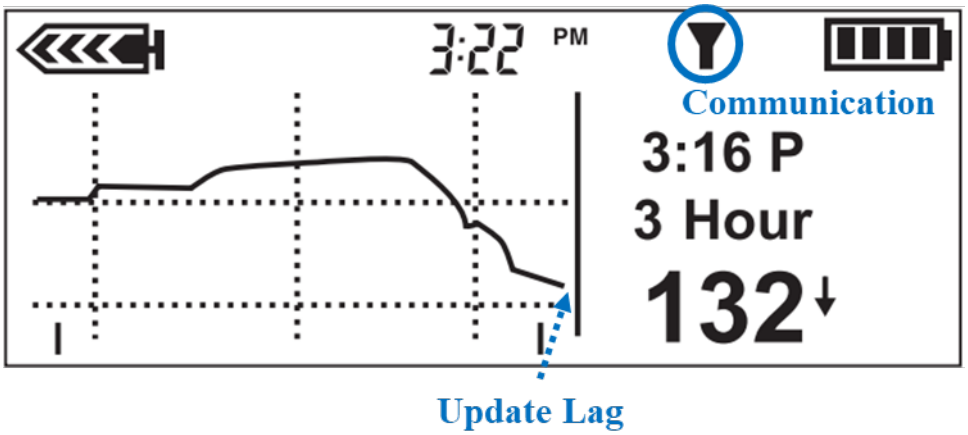

(Ex1011, 65 (excerpted and annotated in blue).) POSITAs would recognize this lag as elapsed time since the most recent five-minute update. (*See* paragraph 44 above.)

128. POSITAs would recognize that glucose data re-populated between five-minute updates is not displayed until the next update. (*See* paragraph 44 above.) Because updates occur every five minutes, the lag between synchronizing glucose data and Paradigm® REAL-Time's display of re-populated data is pre-determined when failed reception is corrected. (*See* paragraphs 44, 75 above.)

129. Alternatively, POSITAs would have found it obvious to wait a predetermined time (*e.g.*, one, two, three update cycles) before displaying re-populated glucose data. (*See* paragraph 44 above.)

12. Claim 20

The glucose monitoring system of claim 1, wherein the data processing and transmitter unit, the receiver unit, or both is further configured to store time information associated with the adverse condition.

130. *Patel*-2009 discloses exchanging glucose history according to a specified time interval. (Ex1012, [0012], [0084].) For example, glucose values calculated during a loss of communication are stored as glucose history and synchronized when communication is re-established. (Ex1012, [0086].) Synchronizing data calculated during a loss of communication necessarily entails storing and exchanging time information associated with the underlying glucose data points and the time interval of lost communication. (*See* paragraph 60 above.)

131. As an alternative basis, Paradigm® REAL-Time discloses displaying the words "Weak Signal" and a corresponding gap when "reception of sensor data from the transmitter to the pump" fails such that "the pump does not receive data." (*See* paragraph 109 above.) Weak signal and lost sensor alarms are triggered after a period of time (5-40 minutes) (*see* paragraphs 76, 109 above), and are shown on the graph and saved in sensor alarm history "along with the time of the alarm:"

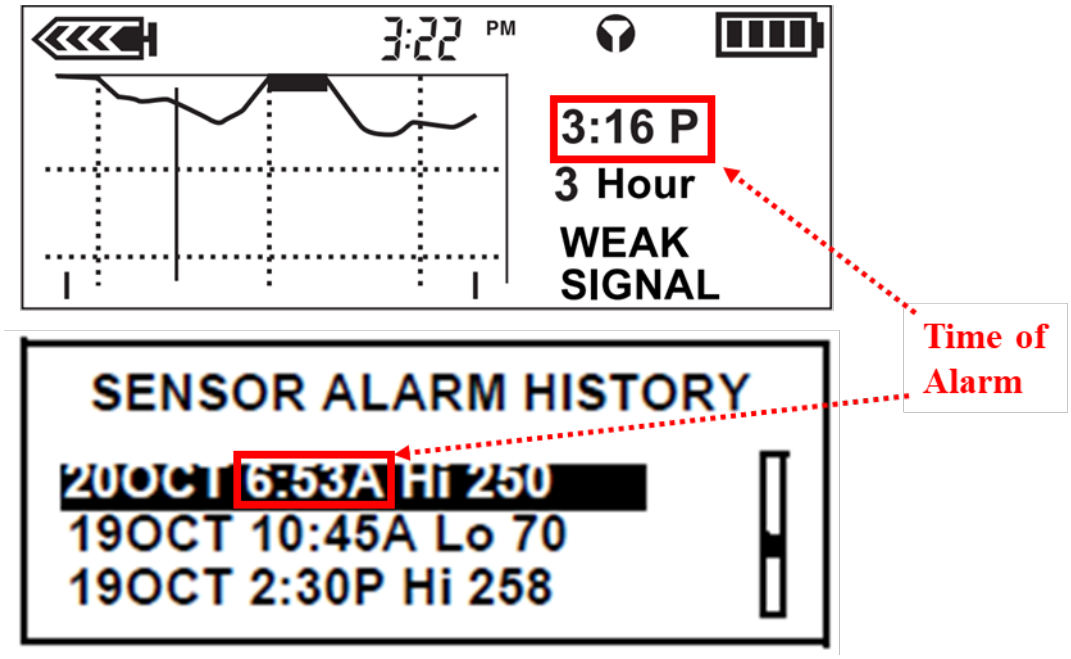

(Ex1011, 49, 67 (excerpted and annotated in red), 73 (excerpted and annotated in red).) Triggering, displaying, and saving weak signal and lost sensor alarms and displaying a data gap when sensor data is not received necessarily entail storing time information associated with failed reception of sensor data. (*See* paragraph 60 above.)

13. <u>Claim 21</u>

The glucose monitoring system of claim 1, wherein the data processing and transmitter unit and at least a portion of the glucose sensor are disposed within a single integrated housing.

132. *Patel*-2009 provides that transceiver 100 fits directly onto and is supported by sensor set 10 itself:

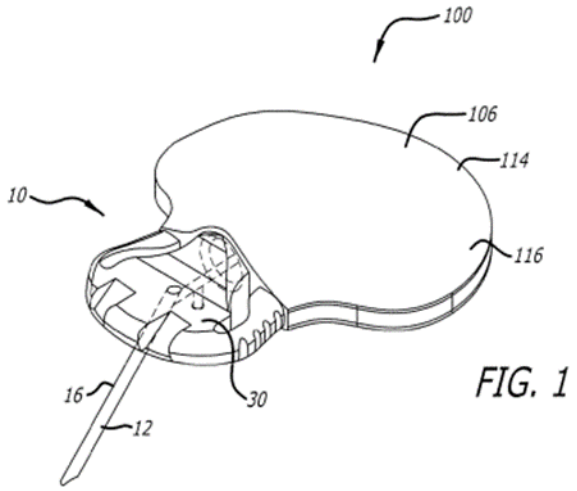

(Ex1012, [0056], [0059], Fig. 1; *see also* paragraph 250 below.)

14. <u>Claim 22</u>

The glucose monitoring system of claim 1, wherein the receiver unit comprises a mobile phone.

133. *Patel-2009* discloses that the transceiver maintains two-way communication and sends glucose values to cellular phone 240:

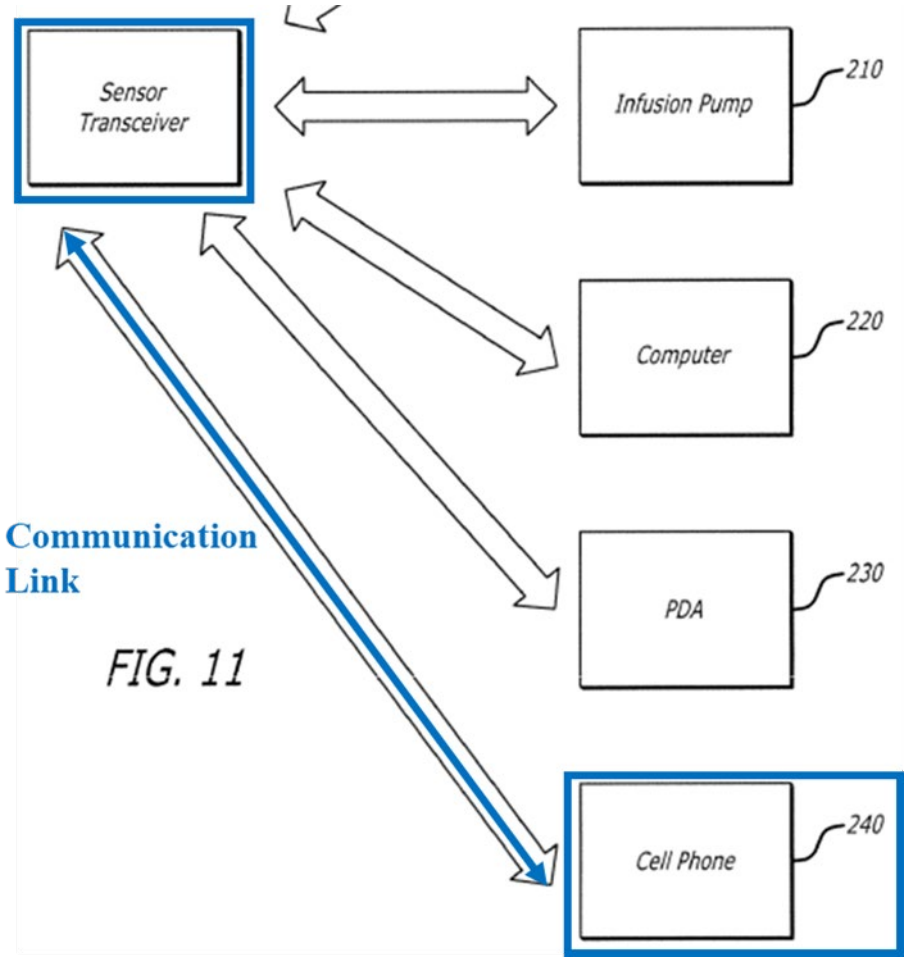

(Ex1012, [0076], [0079], Fig. 11 (annotated in blue).)

15. Claim 23

The glucose monitoring system of claim 1, wherein the time period associated with the adverse condition comprises at least one hour.

134. *Patel*-2009 provides that the transceiver logs calculated glucose values, stores glucose history, and synchronizes glucose data to various devices, including data calculated during communication failure. (Ex1012, [0047], [0081]-[0083], [0086], Fig. 11.) Glucose history encompasses a sensing period of 3-5 days. (Ex1012, [0005].)

16. Claim 24

The glucose monitoring system of claim 1, wherein the glucose monitoring system is further configured for periodic calibration, and wherein the calibration data is based at least in part on glucose reference data received after the portion of the glucose sensor has been positioned under the skin of the user.

135. Paradigm® REAL-Time discloses calibration after the senser is inserted through the skin, "at least once every 12 hours" (*i.e.*, periodically), using blood glucose reference values. (Ex1011, 10, 23, 47, 53, 61-62; *see also* paragraph 94 above.)

17. Claim 26

The glucose monitoring system of claim 24, wherein the glucose monitoring system is further configured for calibration twelve hours after the portion of the glucose sensor has been positioned under the skin of the user.

136. Paradigm® REAL-Time discloses initial calibration two hours after sensor insertion and recommends re-calibration more frequently than every 12 hours (*e.g.*, three times a day). (Ex1011, 10, 61.) A "Cal Reminder" is set as frequently as every 8 hours (*i.e.*, 4 hours before calibration expires), and Paradigm® REAL-Time discloses setting a 2-hour Cal Reminder to request calibration every 10 hours. (Ex1011, 47, 99.) Re-calibration 10 hours after the 2-hour initial calibration occurs 12 hours after insertion.

18. Claim 27

The glucose monitoring system of claim 1, wherein the data processing and transmitter unit is configured to transition from a low-power mode to an operating mode, and wherein the data processing and transmitter unit consumes more power from the power supply in the operating mode than in the low-power mode.

137. *Patel*-2009 discloses that "the transceiver wakes up from a sleep mode prior to exchanging data" and is activated by circuitry that detects sensor connection, an on/off button, a magnetic swipe procedure, or an ultrasonic signal. (Ex1012, [0010], [0048], [0061], [0063], [0080].) The transceiver consumes more power when active. (Ex1012, [0010], [0048], [0061], [0063], [0080].)

19. Claim 28

The glucose monitoring system of claim 1, wherein the power supply of the data processing and transmitter unit is configured to provide power for about three months of continuous operation.

138. *Patel*-2009 discloses transceiver batteries that provide power for 3 months to 2 years. (Ex1012, [0061].)

20. Claim 30

The glucose monitoring system of claim 1, wherein the glucose sensor is further configured to continuously sample the biological fluid of the user to provide the sensor data.

139. Paradigm® REAL-Time provides for measuring "glucose levels continuously" with a glucose sensor "that continuously measures glucose from … subcutaneous tissue as an electronic signal." (Ex1011, 23, 38.)

140. *Patel*-2009 supplements Paradigm® REAL-Time by disclosing that glucose values are calculated and provided on a continuous basis. (Ex1012, [0039], [0086].)

IX. GROUND 2: CLAIMS 4, 9-10, 15-16, AND 25 ARE OBVIOUS OVER PATEL-2009 AND PARADIGM® REAL-TIME IN VIEW OF *CAUSEY*

A. *Causey*

141. U.S. Patent 6,641,533 to *Causey* (Ex1017) is titled "Handheld personal data assistant (PDA) with a medical device and method of using the same."

142. *Causey* discloses a characteristic monitor 2200 that includes display 2208, microprocessor 2216, ROM 2204, and RAM 2206:

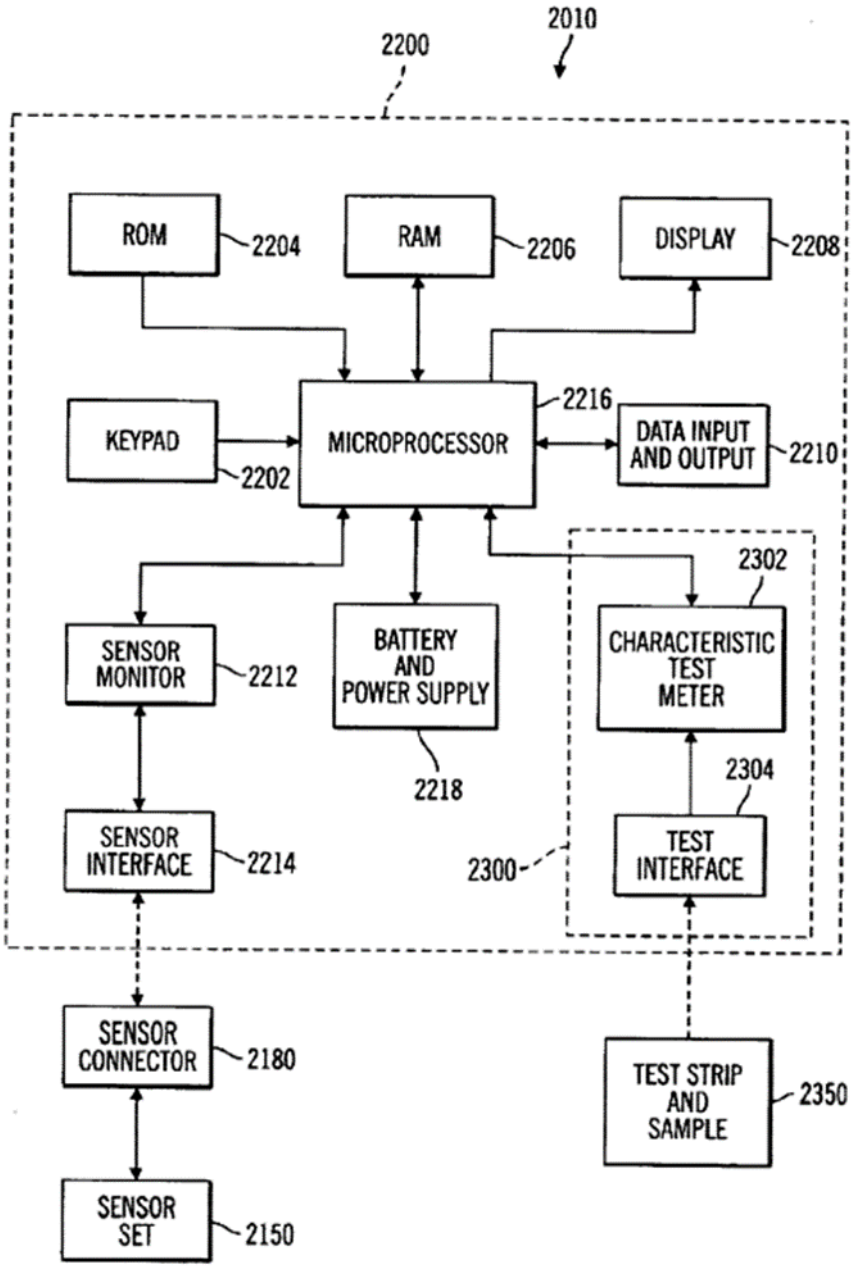

FIG. 30

(Ex1017, 15:17-25, Fig. 30.) The monitor displays measurements received from sensor set 2150 via transmitter 2100:

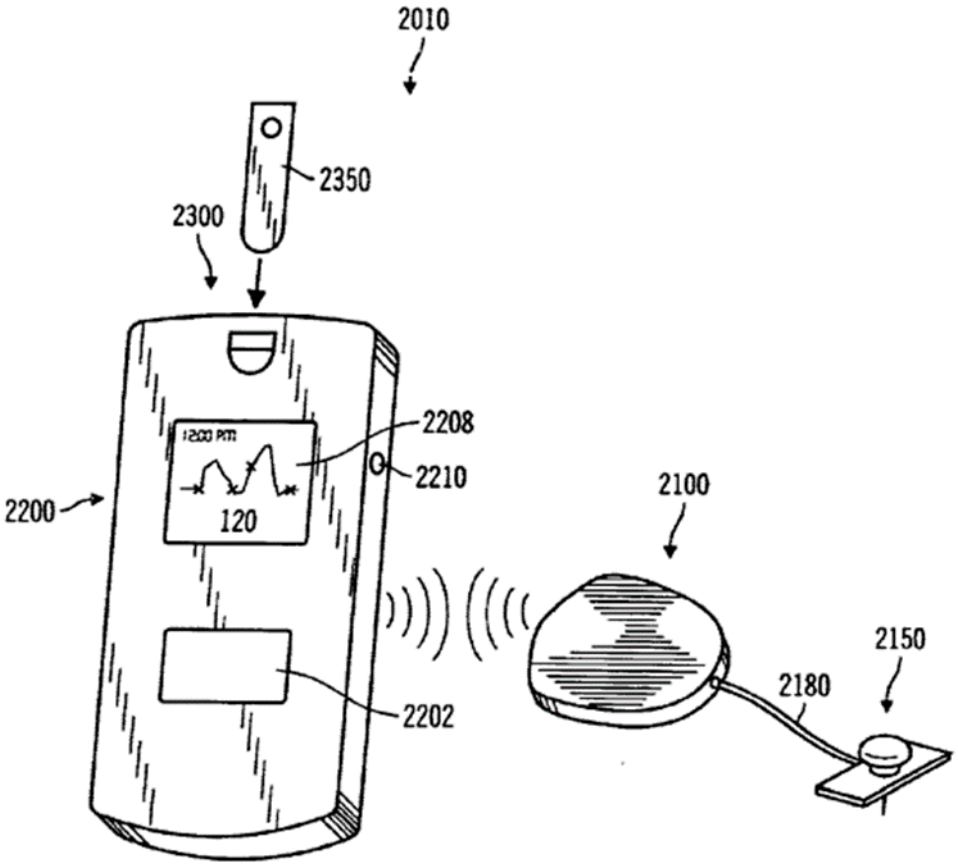

FIG. 31

(Ex1017, [15:43-47], Fig. 31.) Like *Patel*-2009, Causey provides that transmitter 2100 "includes a receiver for remote programming, calibration or data receipt." (Ex1017, 14:14-17.)

143. Sensor signals are monitored to determine when calibration should be performed or delayed due to sensor instability, rapidly changing glucose readings, extreme glucose values, faulty or interrupted data readings, and the like. (Ex1017, 22:18-45.) The sensor monitor and microprocessor are controlled by programs stored in memory. (Ex1017, 15:20-25.)

144. The monitor displays average glucose levels and graphs of historical glucose trends. (Ex1017, 15:48-55.) When calibrated, the monitor updates glucose levels and trends to "show differences between the newly calibrated … data and the data as it was prior to the new calibration." (Ex1017, 15:59-65.)

B. <u>Combination Of Patel-2009, Paradigm® REAL-Time, And Causey</u>

145. *Causey* discloses software programs that prompt or delay calibration based on monitored data and that update glucose graphs to display new glucose data once calibrated. (*See* Section paragraphs 143-144 above.)

146. *Patel*-2009 discloses "periodically read[ing] sensor data and run[ing] at least one of a calibration algorithm … if needed." (Ex1012, [0085].) Paradigm® Real-Time discloses "a Meter BG Now alarm when the sensor is ready for calibration." (Ex1011, 59.) By default, Paradigm® REAL-Time triggers a Meter BG Now alarm after 2 hours of sensor stabilization and every 12 hours thereafter. (Ex1011, 61.) Paradigm® Real-Time also discloses issuing calibration errors after a meter BG (blood glucose) reference is entered. (Ex1011, 75.)

147. The addition of *Causey*'s monitoring and calibration programing expands the *Patel*-2009/Paradigm Combination to not only detect calibration errors but also to prompt or delay calibration based on sensor instability, rapidly changing glucose, glucose level excursions, and faulty or interrupted glucose readings. (Ex1011, 71, 75; Ex1017, 22:18-45.) By incorporating *Causey*, the *Patel*-

2009/Paradigm/*Causey* Combination applies detected sensor instability, rapidly changing glucose, glucose level excursions, and faulty or interrupted glucose readings to prompt calibration (*e.g.*, issue a BG Now alarm) or delay calibration. (Ex1017, 22:18-45.)

148. The *Patel*-2009/Paradigm Combination displays a data gap when glucose data is not received and re-populates data gaps when glucose data is synchronized following failed communication. (*See* paragraphs 78, 109, 112-113 above.) The addition of *Causey*'s programing for displaying updated graphs with newly calibrated data expands the *Patel*-2009/Paradigm Combination to re-populate data gaps resulting from calibration error. (Ex1017, 15:55-65.)

149. The *Patel*-2009/Paradigm/*Causey* Combination programs the *Patel*-2009 monitor as disclosed in *Causey*. (*See* paragraphs 56-57 above.)

C. <u>Motivation To Combine And Expectation Of Success</u>

150. POSITAs implementing the *Patel*-2009/Paradigm Combination to detect calibration errors would have wanted to apply these errors to optimize calibration timing. *Patel*-2009 discusses advantages of "periodically read[ing] sensor data and run[ing] … a calibration algorithm." (Ex1012, [0085].) Paradigm® REAL-Time discloses a sophisticated detection network, issuance of a BG Now alarm to prompt calibration, and issuance of a calibration error when an entered blood glucose reference cannot be used for calibration. (Ex1011, 61, 75.) Therefore,

POSITAs would have been motivated to incorporate *Causey's* programming to prompt or delay calibration (*e.g.*, by issuing alarm, errors, and warnings) when warranted by sensor data. (Ex1017, 22:18-45; *see also* paragraph 58 above (prompt calibration); paragraph 151 below (delay calibration).)

151. POSITAs understood that calibration relies on glucose reference data. (*See* paragraphs 37-40, 54 above). One purpose of continuous glucose monitoring is to reduce the pain and cumulative discomfort of requiring numerous finger sticks to measure blood glucose. (Ex1017, 1:30-44, 2:20-24; see also Ex1037, 9.) Therefore, POSITAs would have been motivated to delay calibration requests rather than disregard inopportune BG (blood glucose) references.

152. POSITAs implementing the *Patel*-2009/Paradigm Combination to re-populate data gaps due to failed reception would have wanted to address glucose data missing due to calibration errors as well. (*See* paragraph 59 above.) As discussed with the *Patel*-2009/Paradigm Combination, POSITAs would have been motivated to detect missing or inaccurate glucose data and convey as much accurate glucose information to a user as possible without providing inaccurate information. (*See* paragraphs 60, 80 above.) Therefore, POSITAs would have been motivated to expand the *Patel*-2009/Paradigm Combination's re-population of missing glucose data to include gaps resulting from calibration error by updating glucose trends with

newly calibrated data as disclosed in *Causey*. (Ex1017, 15:55-65; *see* paragraphs 59-60 above.)

153. POSITAs would have specifically chosen to combine *Causey* with *Patel*-2009 and Paradigm® REAL-Time because they all relate to Medtronic continuous glucose monitoring systems and incorporate many of the same patents and applications. (Ex1017, 1:10, 1:57-63; Ex1012, [0006], [0050], [0069].)

154. For example, *Patel*-2009 and *Causey* both incorporate U.S. Patent Nos. 4,562,751; 4,678,408; 4,685,903; and 4,573,994) (Ex1017, 1:57-63; Ex1012, [0050], [0069]), and *Patel*-2009 incorporates U.S. Provisional 60/096,994, which *Causey* incorporates and relies on for priority. (Ex1012, [0006]; Ex1017, 1:10.)

155. POSITAs would have expected success because *Causey* discloses monitor control programs that are stored in memory. (*See* paragraph 143 above.) POSITAs would have known how to modify the *Patel*-2009/Paradigm Combination to perform the functions disclosed in *Causey*, including by modifying the code of *Patel*-2009's monitor or importing programs from *Causey's* monitor. (*See* paragraphs 56-57 above.)

D. <u>Ground 2 Claim Mappings</u>

156. It is my opinion that the Patel-2009/Paradigm/*Causey* Combination renders obvious claims 4, 9-10, 14-16, and 25, as set out below.

1. Claim 4

The glucose monitoring system of claim 1, wherein the adverse condition comprises a signal error associated with the glucose sensor.

157. *Causey* discloses monitoring sensor signals to detect faulty or interrupted glucose readings, prompting or delaying calibration based on these faulty or interrupted readings, and updating glucose graphs to display glucose data once calibrated. (Ex1017, 15:43-65, 22:28-45.) Therefore, glucose data would fill in glucose graphs once calibrated following faulty or interrupted glucose readings (*i.e.*, sensor signal error). (Ex1017, 15:59-65.)

158. Alternatively, POSITAs would have found it obvious to update glucose graphs to display glucose data calibrated following faulty or interrupted glucose readings and other sensor signal errors. (*See* paragraphs 59-60 above.)

2. Claim 9

The glucose monitoring system of claim 1, wherein the adverse condition comprises a sensor instability condition.

159. *Causey* discloses monitoring sensor signals and delaying calibration until "sensor data readings are relatively stable," and discloses updating glucose graphs to display glucose data once calibrated. (Ex1017, 15:43-65, 22:28-36.) Therefore, glucose data would fill in glucose graphs once calibrated following sensor instability. (Ex1017, 15:59-65.)

160. Paradigm® REAL-Time supplements *Patel*-2009 by disclosing sensor instability as a cause of calibration error. (Ex1011, 10, 75.)

161. Alternatively, POSITAs would have found it obvious to update glucose graphs to display glucose data calibrated following sensor instability. (*See* paragraphs 59-60 above.)

3. <u>Claim 10</u>

The glucose monitoring system of claim 1, wherein the adverse condition comprises a calibration failure condition.

162. *Causey* and Paradigm® REAL-Time disclose calibration errors due to sensor stabilization, rapidly changing glucose, blood glucose reference errors, and other conditions. (Ex1017, 22:28-45; Ex1011, 10, 75.) *Causey* discloses updating glucose graphs to display newly calibrated glucose values following calibration errors. (*See* paragraph 159 above, paragraphs 169, 171, 173 below.) Therefore, glucose data would fill in glucose graphs once calibrated following calibration error. (Ex1017, 15:59-65.)

163. Alternatively, POSITAs would have found it obvious to update glucose graphs to display glucose data calibrated following calibration errors. (*See* paragraphs 59-60 above.)

4. Claim 14

The glucose monitoring system of claim 1, wherein the on body unit further comprises a temperature sensor, and wherein the adverse condition comprises a temperature measurement outside a predetermined range.

164. Counsel for Petitioner has informed me that *Patel*-2009 (Ex1012) incorporates U.S. Patent Application 11/322,568 ("the '568 application) to Mastrototaro (Ex1020). (Ex1012, [0040]) that this patent application is effectively part of *Patel*-2009 as if their disclosures were explicitly contained therein.

165. I have analyzed the content of *Mastrototaro* (Ex1019) and have also analyzed the contents of the '568 Application (Ex1020), and it is my opinion that *Mastrototaro*'s disclosures are substantially identical to disclosures of the '568 Application. (*See* paragraph 181 below.)

166. *Mastrototaro* discloses that sensor set 10 monitors temperature and uses the relationship between glucose sensor activity and temperature to determine sensor calibration. (Ex1019, [0042].) *Shahmirian* also discloses that the glucose sensor measures temperature. (Ex1023, [0052].)

167. *Causey* discloses or renders obvious updating display of glucose data to show data calibrated following new or updated calibration. (*S*ee paragraph 144 above.)

168. Considering these disclosures, POSITAs would have found it obvious to delay calibration until temperature is within range and display newly calibrated glucose data following this calibration. (*See* paragraphs 59-60 above.)

5. Claim 15

The glucose monitoring system of claim 1, wherein the adverse condition comprises an analyte level exceeding a predetermined threshold.

169. Paradigm® REAL-Time discloses that calibration may only be performed when blood glucose is between 40 and 400 mg/dl. (Ex1011, 62.) *Causey* discloses prompting calibration based on glucose level excursions and updating glucose graphs to display glucose data once calibrated. (Ex1017, 15:43-65, 22:28-45.) Therefore, glucose data would fill in glucose graphs once calibrated following glucose excursions. (Ex1017, 15:59-65.)

170. Alternatively, POSITAs would have found it obvious to update glucose graphs to display glucose data calibrated following glucose level excursions. (*See* paragraphs 59-60 above.)

6. Claim 16

The glucose monitoring system of claim 1, wherein the adverse condition comprises a rate of change of an analyte level exceeding a predetermined threshold.

171. Paradigm® REAL-Time discloses rapidly changing glucose levels as a cause of calibration error. (Ex1011, 10, 61, 75.) For example, Paradigm® REAL-

Time indicates when glucose changes by more than 20 mg/dl and more than 40 mg/dl in 20 minutes. (Ex1011, 65-66.) *Causey* discloses prompting calibration following rapidly changing glucose levels and updating glucose graphs to display glucose data once calibrated. (Ex1017, 15:43-65, 22:28-45.) Therefore, glucose data would fill in glucose graphs once calibrated following rapid glucose change. (Ex1017, 15:59-65.)

172. Alternatively, POSITAs would have found it obvious to update glucose graphs to display glucose data calibrated following rapid changes in glucose level. (*See* paragraphs 59-60 above.)

7. <u>Claim 25</u>

The glucose monitoring system of claim 24, wherein the adverse condition comprises a signal error associated with the blood glucose reference data.

173. Paradigm® REAL-Time provides that blood glucose meter communications are interrupted by signal interference and that inaccurate, incorrect, and erroneous blood glucose readings are a cause of calibration error. (Ex1011, 10, 12, 41, 75.) *Causey* discloses updating glucose graphs to display glucose data once calibrated. (Ex1017, 22:28-45.) Therefore, glucose data would fill in glucose graphs once calibrated following blood glucose reference error. (Ex1017, 15:59-65.)

174. Alternatively, POSITAs would have found it obvious to update glucose graphs to display glucose data calibrated following blood glucose reference error. (*See* paragraphs 59-60 above.)

X. GROUND 3: CLAIMS 1-12, 14-18, 20-28, AND 30 ARE OBVIOUS OVER PATEL-2008 AND INCORPORATED REFERENCES

A. Patel-2008

175. U.S. Publication 2008/0119705 to Patel ("*Patel*-2008", Ex1015) is titled "Systems and Methods for Diabetes Management Using Consumer Electronic Devices."

176. *Patel*-2008 teaches a system "for managing diabetes using a consumer electronic device [("CED")], including a medical device for taking a physiological reading of a user." (Ex1015, [0006].) The medical device is a glucose monitoring device 120, including glucose sensor 130 and transmitter 125 for communicating readings to CED 100 (*e.g.*, PDA/Smartphone):

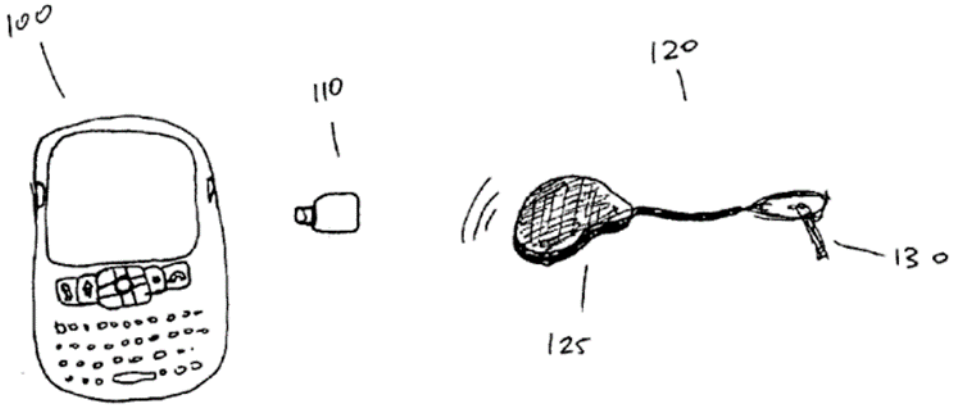

FIGURE 1

(Ex1015, [0006], [0033], Fig. 1.) The glucose monitoring device and CED use a Bluetooth protocol to communicate directly or through connector 110. (Ex1015, [0035], [0045].) *Patel*-2008 "specifically incorporate[s] by reference" co-pending Application 11/322,568 to Mastrototaro (Ex1020) as describing the glucose monitoring device; co-pending Application 10/335,256 to Shahmirian (Ex1022) as describing the connector and "communication solutions;" and *Causey* (Ex1017) as describing the CED. (Ex1015, [0033]-[0035].)

177. The diabetes management system disclosed in *Patel*-2008 "includes software for managing and processing data obtained by the [glucose monitoring] device." (Ex1015, [0006].) This "software-based application includes a graphical user interface for displaying data to a patient." (Ex1015, [0012].) Software 520 displays blood glucose levels 722, signal strength 704, and missing data 728:

FIGURE 5

(Ex1015, Fig. 5.)

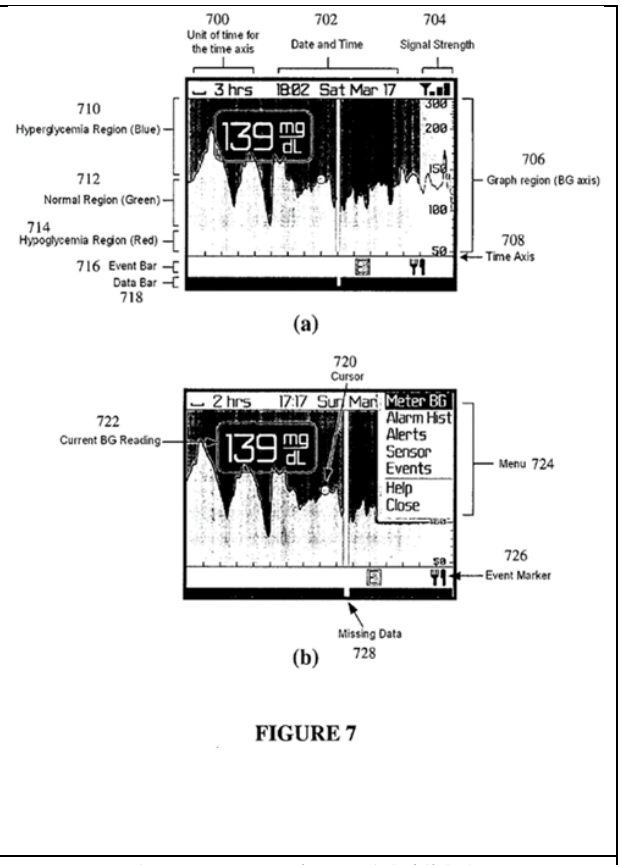

FIGURE 7

(Ex1015, Fig. 7(a)/(b).)

(Ex1015, [0052], [0056]-[0057].)

B. Incorporation of Mastrototaro, Shahmirian, and Causey

178. Counsel for Petitioner has informed me that because *Patel*-2008 (Ex1015) "specifically incorporate[s] by reference" U.S. Patent Application 11/322,568 to Mastrototaro et. Al. ("the '568 Application," Ex1020), U.S. Patent Application 10/335,256 to Shahmirian el. Al. ("the '256 Application," Ex1022), and U.S. Patent 6,641,533 *Causey* et. Al. (Ex1017), that these patents and patent applications are effectively part of *Patel*-2008 as if their disclosures were explicitly contained therein. (Ex1015, [0033]-[0035].)

1. **Mastrototaro**

179. U.S. Patent Publication 2006/0202859 ("*Mastrototaro*", Ex1019) is titled Telemetered characteristic monitor system and method of using the same.

180. Counsel for Petitioner informed me that *Mastrototaro* (Ex1019) issued from the '568 Application (Ex1020, Application No. 11/322,568) without any amendments to its patent specification during prosecution. Counsel for Petitioner has also informed me that the '568 Application's drawings were updated by a transmittal of formal drawings during prosecution and that *Mastrototaro*'s figures reflect this update to formal drawings.

181. I have analyzed the content of *Mastrototaro* (Ex1019) and have also analyzed the contents of the '568 Application (Ex1020), and it is my opinion that *Mastrototaro*'s disclosures are substantially identical to disclosures of the '568 Application. Except for minor formatting changes and edits, my opinion is that the text on pages 2-33 of the '568 Application (Ex1020, 2-33) is substantially identical to the text in paragraphs [0001] through [0086] of *Mastrototaro*. (Ex1019, 14-24.) Although Counsel for Petitioner has informed me and I note that some drawing in the '568 Application (Ex1020, 39-50) appear to have been updated in *Mastrototaro*'s figures (Ex1019, 2-12), it is my opinion that these updated figures disclose substantially identical content as the original drawings of the '568 Application.

182. *Mastrototaro* discloses a "telemetered characteristic monitor transmitter coupled to a sensor set," adapted for use in subcutaneous tissue. (Ex1019, [0035].) In one embodiment, sensor set 10 and transmitter 100 are connected by cable 102 with a sensor connector 104:

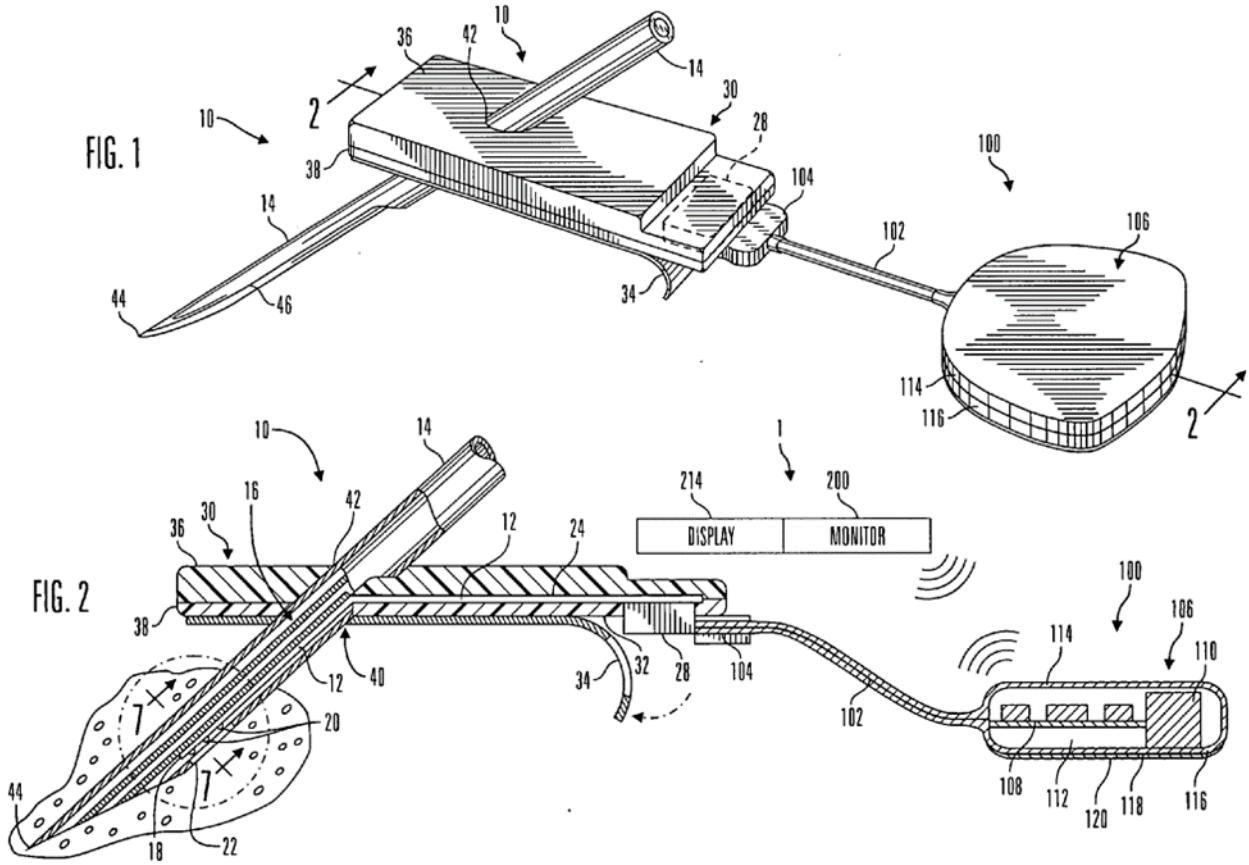

(Ex1019, [0043], [0050], Figs. 1-2.) The transmitter has a printed circuit board 108, batteries 110, antenna 112, sensor interface 122, and timers 126:

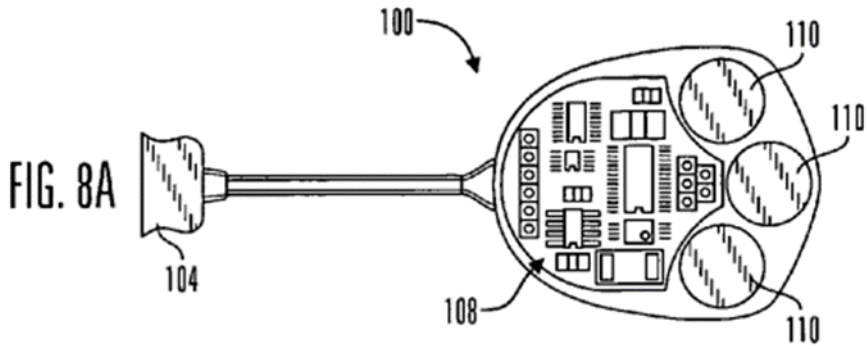

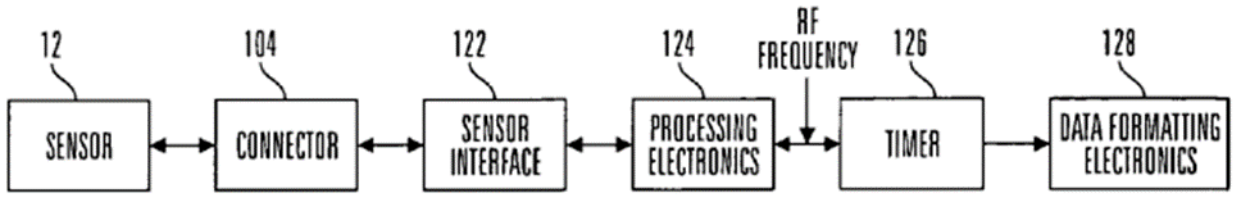

FIG. 8B

(Ex1019, [0051], [0054], Fig. 8(a)/(b).) *Mastrototaro* also discloses sensor interface 122 connected directly to sensor 12 without a cable 102 or connector 104. (Ex1019, [0050], [0054].) For example, transmitter 100' is directly connected to sensor set 10':

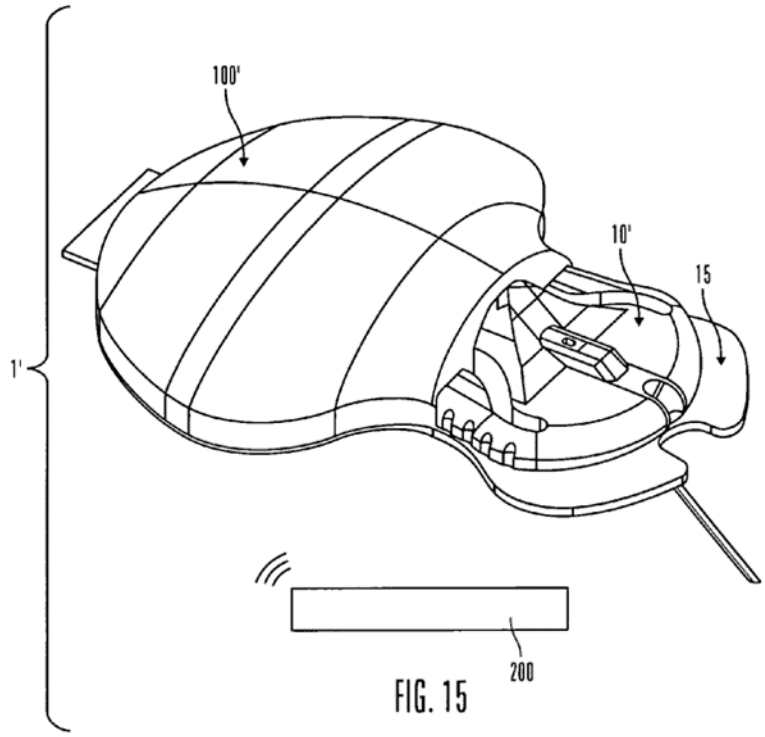

FIG. 15

(Ex1019, [0050], [0054], Fig. 15.) The printed circuit board has processing electronics 124 and formatting electronics 128. (Ex1019, [0054].) For example, a circuit board with a "Microprocessor 1120, Digital to Analog Converter 1122, Real Time Clock 1126, EEPROM 1126, RF Transceiver 1128, and battery 1130:"

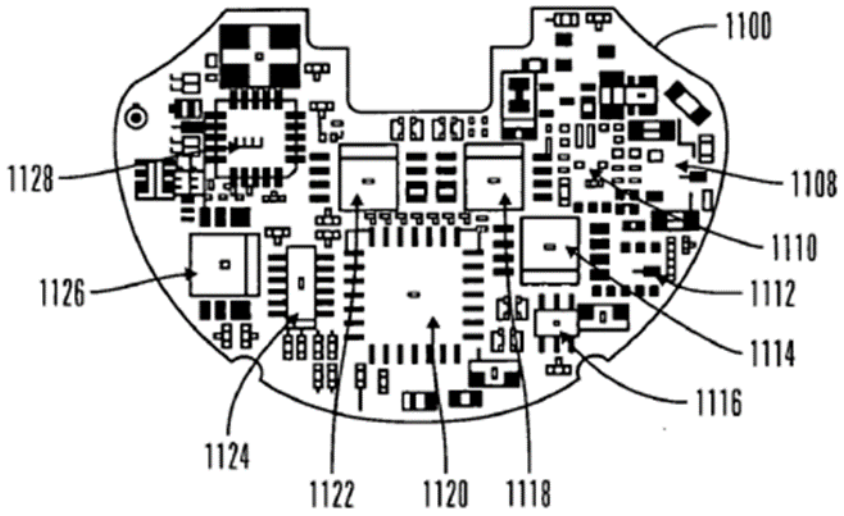

FIG. 19

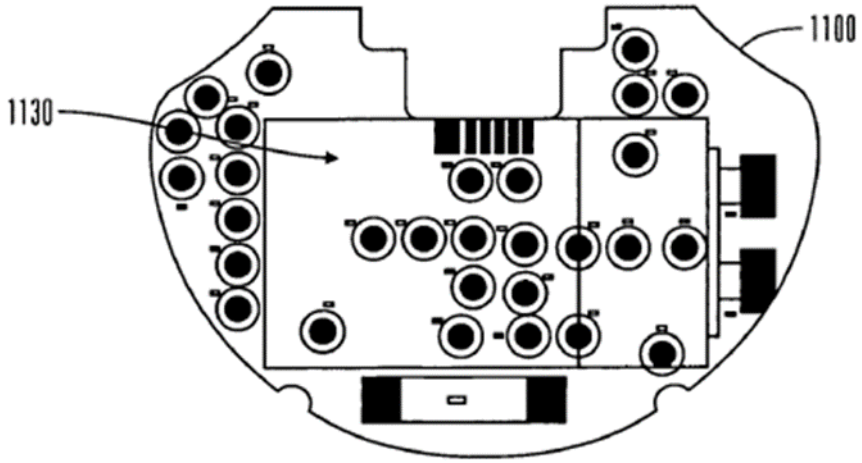

FIG. 20

(Ex1019, [0054], Figs. 19-20.)

2. **Shahmirian**

183. U.S. Patent Publication 2004/0122353 ("*Shahmirian*", Ex1023) is titled "Relay device for transferring information between a sensor system and a fluid delivery system."

184. Counsel for Petitioner informed me that *Shahmirian* issued from the '256 Application (Ex1022, Application No. 10/335,256) without any amendments to its patent specification during prosecution.

185. I have analyzed the content of *Shahmirian* (Ex1023) and have also analyzed the content of the '256 Application (Ex1022), and it is my opinion that the *Shahmirian*'s disclosures are substantially identical to the '256 Application. Except for minor formatting changes and edits, my opinion is that the text on pages 2-45 of the '568 Application (Ex1022, 2-45) is substantially identical to the text in paragraphs [0001] through [0113] of *Shahmirian*. (Ex1023, 22-38.) It is also my opinion that figures of the *Shahmirian* (Ex1023, 2-21) disclose substantially identical content to drawings the '256 Application. (Ex1022, 69-88.)

186. *Shahmirian* discloses a "BG ("Blood Glucose") monitoring system 20 [that] communicate[s] with [an] infusion pump 30 using wireless modes of communication, such as radio frequency:"

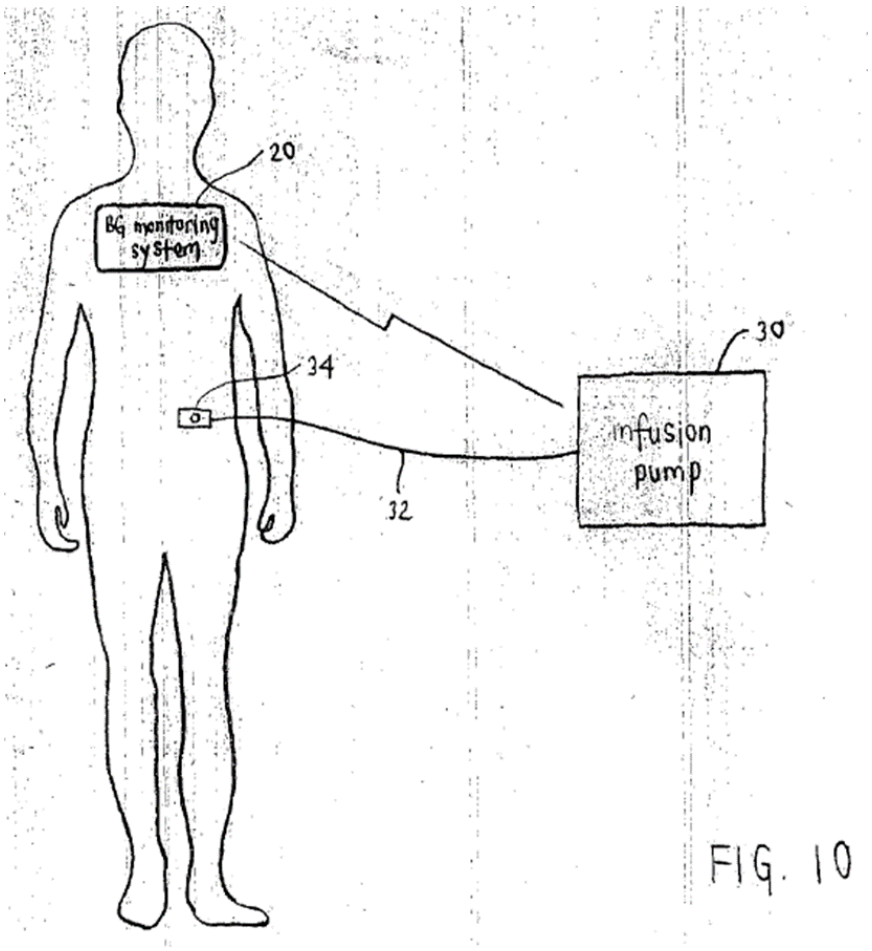

(Ex1023, [0081], Fig. 10.) The infusion pump incorporates a relay device (*e.g.*, transmitter and/or receiver) capable of both receiving and transmitting communications with the monitoring system in various formats, frequencies, and communication protocols—including Bluetooth. (Ex1023, [0068], [0081], [0089].)

187. *Shahmirian* discloses bi-directional communication flowing between BG monitoring system 20 and infusion pump 30. (Ex1023, [0111].) These communications include transmission of sensor measurements processed by calibration algorithm 26, which "resides with and is executed by the processor of the

BG monitoring system 20 … as shown in FIG. 5(c)," from the monitoring system (*i.e.*, glucose sensor and transmitter) to infusion pump 30:

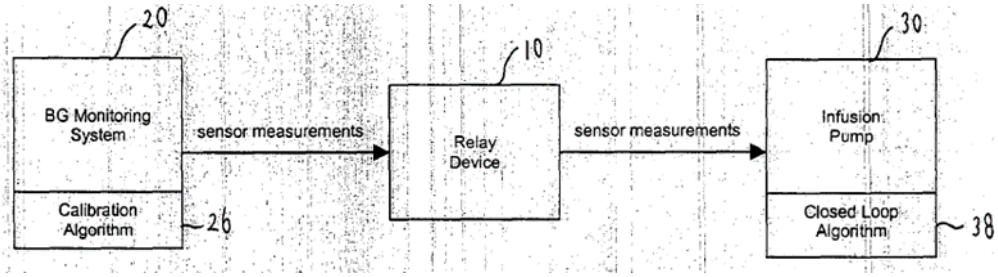

Fig. 5(c)

(Ex1023, [0106], Fig. 5(c).) Communications also include signals from infusion pump 30 to BG monitoring system 20, including to "request information … verify receipt of information, [and] echo information received." (Ex1023, [0111].) For example, "the infusion pump 30 indicates to the BG monitoring system 20 the most recent sensor data that the infusion pump 30 has received, and in response, the BG monitoring system 20 sends any additional sensor data that the BG monitoring system 20 has that has not been received by the infusion pump 30." (Ex1023, [0103].) The monitoring system stores raw glucose data and calibrated glucose measurements in memory. (Ex1023, [0063].)

3. <u>Causey</u>

188. *Causey* discloses that the monitor, which updates display of glucose levels and trend graphs with newly calibrated data, may be a PDA. (Ex1017, 22:46-63.)

C. Combination, Motivation <u>To Combine, And Expectation Of Success</u>

189. Counsel for Petitioner has informed me that the disclosures of *Mastrototaro*, *Shahmirian*, and *Causey* are incorporated into and effectively part of *Patel*-2008.

190. In addition, POSITAs would have been motivated to integrate the glucose sensor and transmitter in *Mastrototaro*, bi-directional communications of *Shahmirian*, and monitor control programs of *Causey* into the diabetes management system of *Patel*-2008:

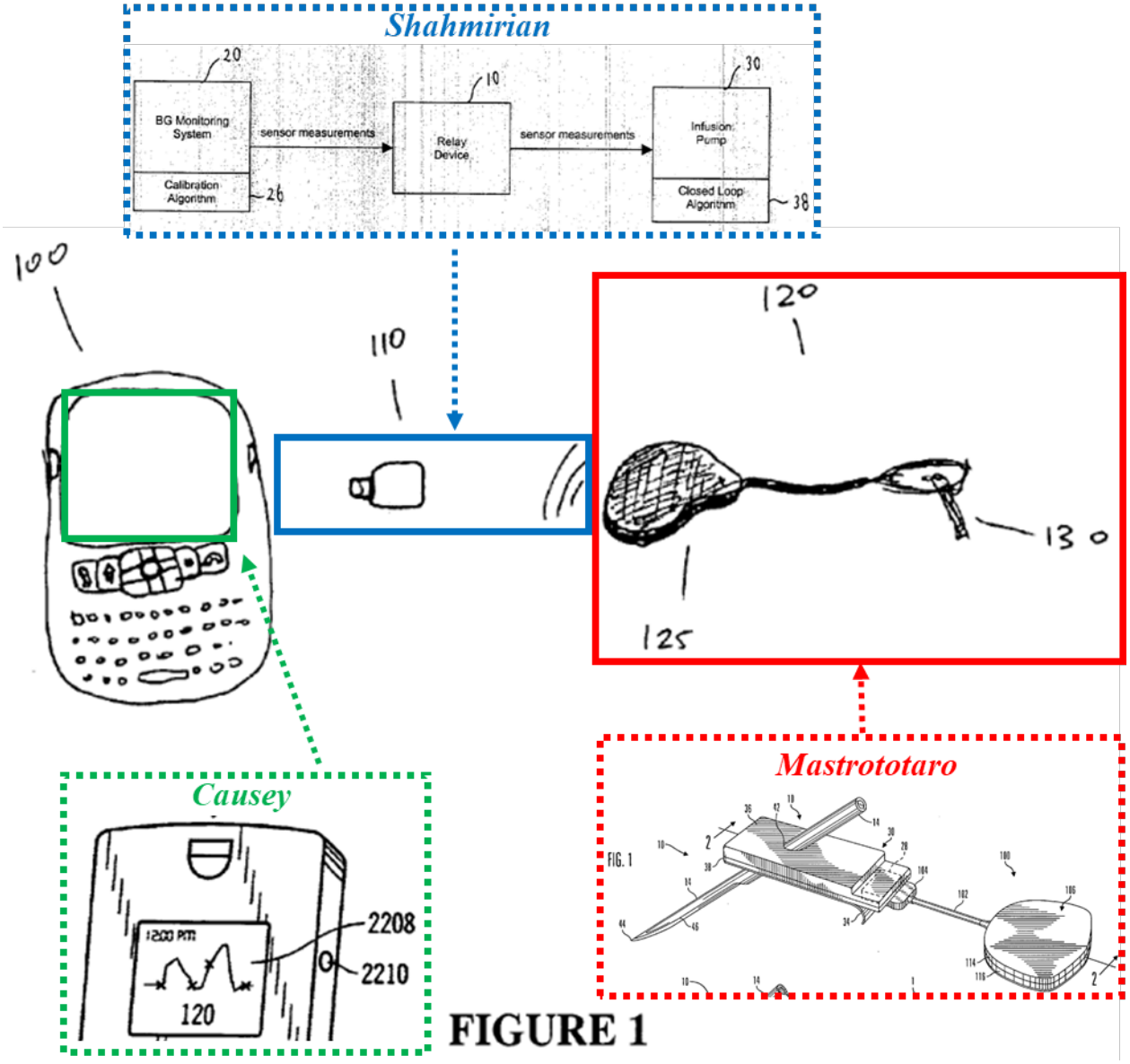

FIGURE 1

(Ex1015, [0033]-[0035], Fig. 1 (annotated in red, green, and blue); Ex1017, Fig. 31 (annotated in red); Ex1019, Fig. 1 (annotated in green); Ex1023 Fig. 5(c) (annotated blue); *see paragraphs* 191-193 below.) POSITAs would have been motivated to combine *Mastrototaro*, *Shahmirian*, and *Causey* with *Patel*-2008 because each is a Medtronic MiniMed continuous glucose monitoring component referenced by citation. *Patel*-2008 expressly states that "glucose monitoring device 120 … [is] of

the type described" in *Mastrototaro*, discusses communication protocols (including Bluetooth) associated with connector 110 of the type described in *Shahmirian*, and provides that CED 100 includes various PDA/Smartphones and other devices of the type described in *Causey*. (Ex1015, [0033]-[0035].)

191. POSITAs would have been motivated to combine the sensor and transmitter of *Mastrototaro*, the communications of *Shahmirian*, and the monitor control programs of *Causey* to effectuate a diabetes management system with the monitoring, communication, and display functionalities disclosed in *Patel*-2008. (Ex1015, [0038], [0045], [0052], [0056-57]; *see* paragraphs 176-177 above.)

192. POSITAs would have also been motivated to incorporate the monitoring, communication, and display functionalities features of *Mastrototaro*, *Shahmirian*, and *Causey* to convey as much accurate glucose information to a user as possible without providing inaccurate information. (*See* paragraphs 60, 80 above.)

193. POSITAs would have expected success because *Mastrototaro*, *Shahmirian*, and *Causey* all relate to components incorporated into the diabetes management system of *Patel*-2008. (*See* paragraphs 189-190 above.) For example, POSITAs would have known how program the transmitter and CED disclosed in *Patel*-2008 and *Mastrototaro* to perform the communication, monitoring, calibration, and display functions of *Shimerian* and *Causey*. (*See* paragraphs 56-57 above.)

D. Ground 3 Claim Mappings

194. It is my opinion that *Patel*-2008 with incorporated references and the *Patel*-2008/*Mastrototaro*/*Shahmirian/Causey* Combination render obvious claims 4, 9-10, 14-16, and 25, as set out below.

1. Claim 1

a) [1.A] (preamble)

A glucose monitoring system for backfilling data gaps that occur while a user monitors glucose levels, the glucose monitoring system comprising:

195. *Patel*-2008 discloses a diabetes management system composed of a glucose monitoring device and a CED that displays a graph of glucose levels. (Ex1015, [0006], [0033], [0052], [0056].) This graph shows a gap when no glucose data is received:

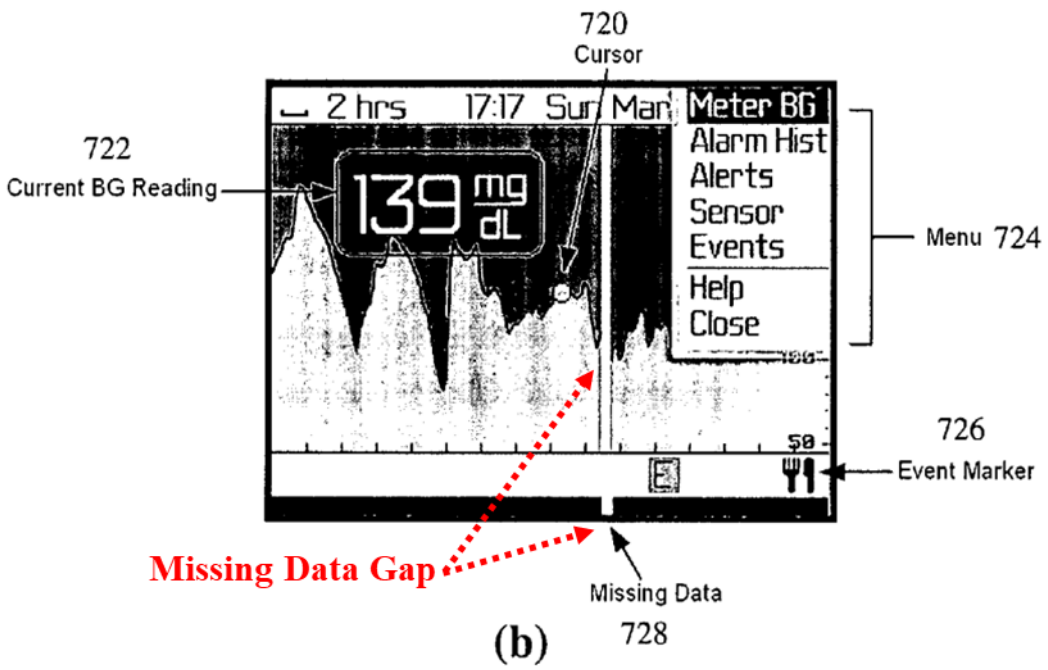

FIGURE 7

(Ex1015, [0057], Fig. 7(b) (annotated in red).)

196. *Shahmirian* discloses storing raw and calibrated glucose data in memory of the BG monitoring system (*e.g.*, glucose sensor and transmitter), retransmission of any sensor measurements not received by an insulin pump monitor, and that received measurements are displayed. (*See* paragraphs 213-214 below.)

197. Therefore, POSITAs would have found it obvious to re-populate the data gap with retransmitted glucose data. (*See* paragraph 60 above.)

b) [1.B]

a glucose sensor, a portion of which is configured to be positioned under skin of the user, wherein the glucose sensor is configured to sample a biological fluid of the user to provide sensor data;

198. *Mastrototaro* discloses that subcutaneous sensor 12 of sensor set 10 exposes electrodes 20 to the user's bodily fluids:

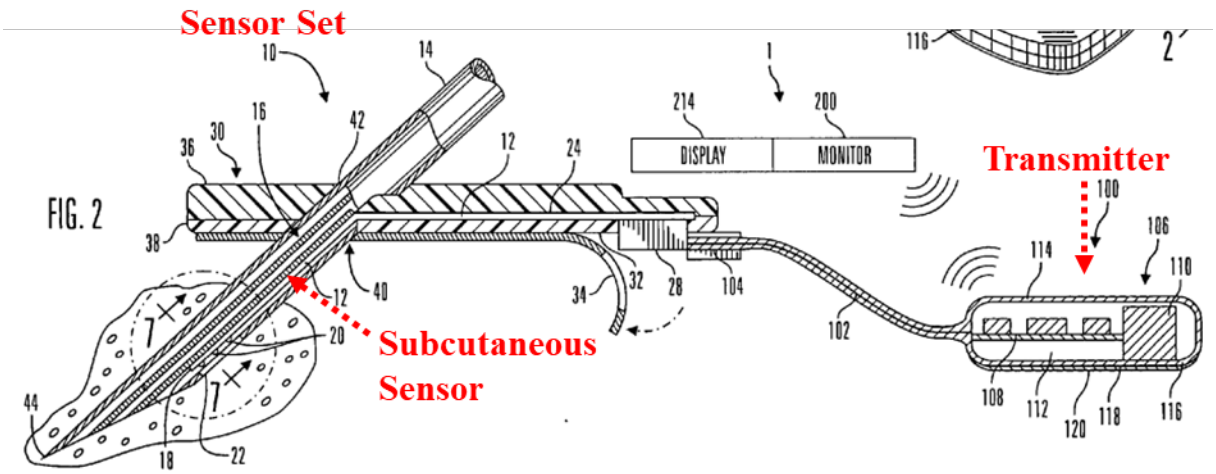

(Ex1019, [0043], Fig. 2 (annotated in red).) The sensor produces signals indicative of glucose concentration. (Ex1019, [0007], [0041].)

c) [1.C]

a data processing and transmitter unit coupled to the glucose sensor, the data processing and transmitter unit comprising a power supply, a processor of the data processing and transmitter unit, memory of the data processing and transmitter unit, and a radio frequency transceiver of the data processing and transmitter unit, wherein the data processing and transmitter unit is configured to:

199. *Mastrototaro* discloses transmitter 100 coupled to sensor set 10 by cable 102:

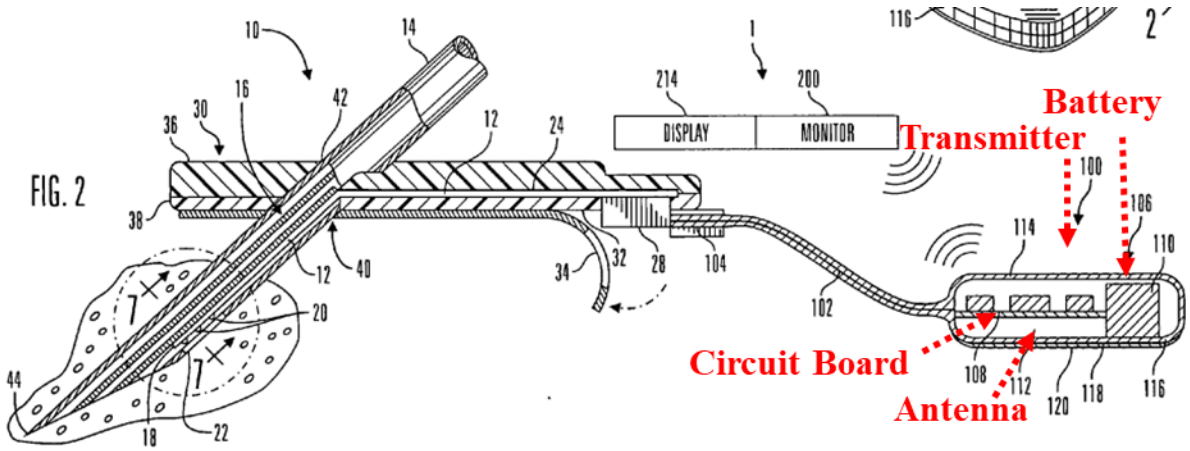

(Ex1019, [0050], Fig. 2 (annotated in red).) Transmitter 100 includes printed circuit board 108, batteries 110, antenna 112, sensor interface 122, processing electronics 124, timers 126, and data formatting electronics 128. (Ex1019, [0051] [0054].)

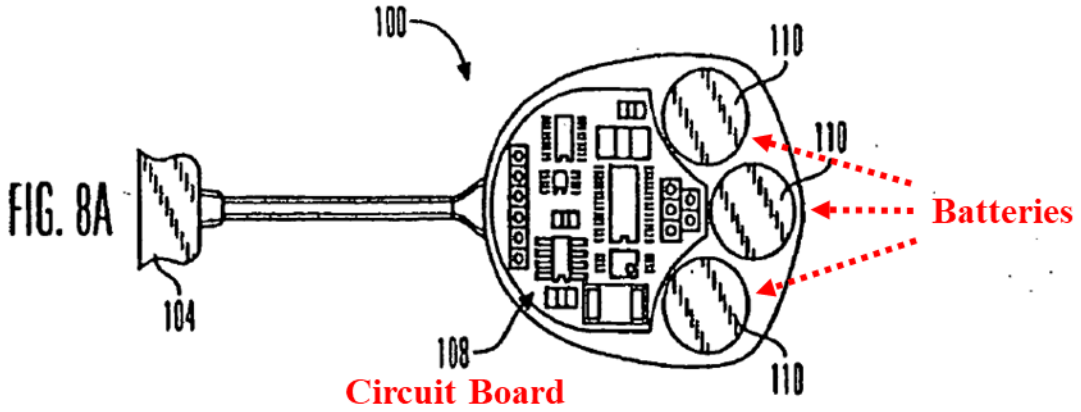

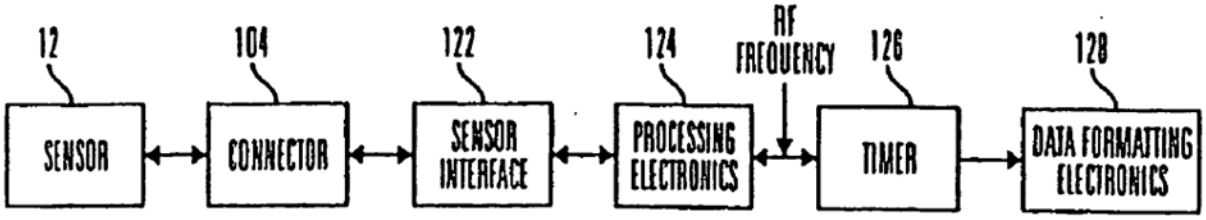

FIG. 8B

(Ex1019, Figs. 8(A)/(B) (annotated in red).) *Mastrototaro* also discloses transmitter 100' and sensor set 10' modified for direct connection without a cable:

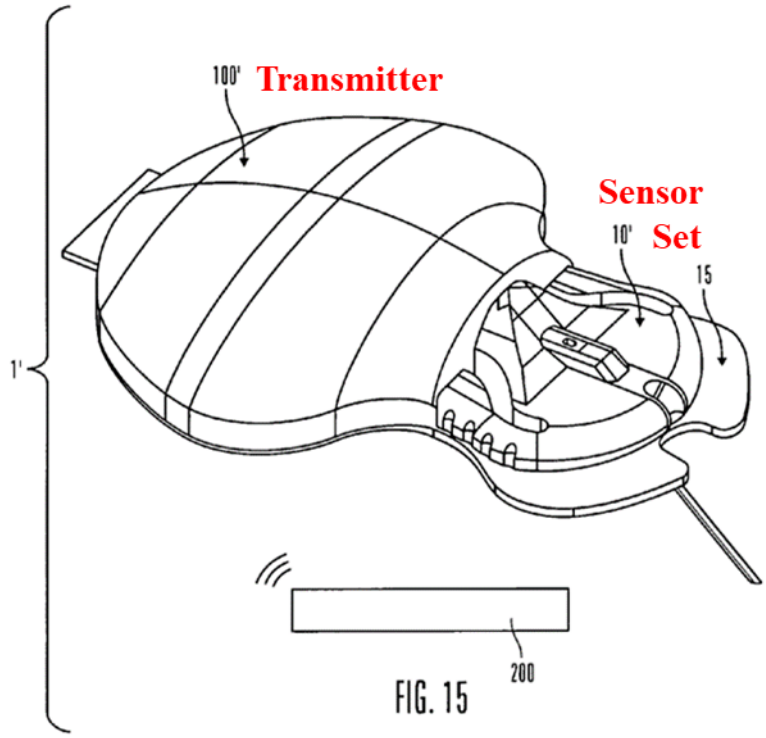

(Ex1019, [0050], Fig. 15 (annotated in red).) Transmitter 100' includes a printed circuit board with microprocessor 1120, power switch 1112, Real Time Clock 1126, EEPROM 1126, RF Transceiver 1128, and battery 1130:

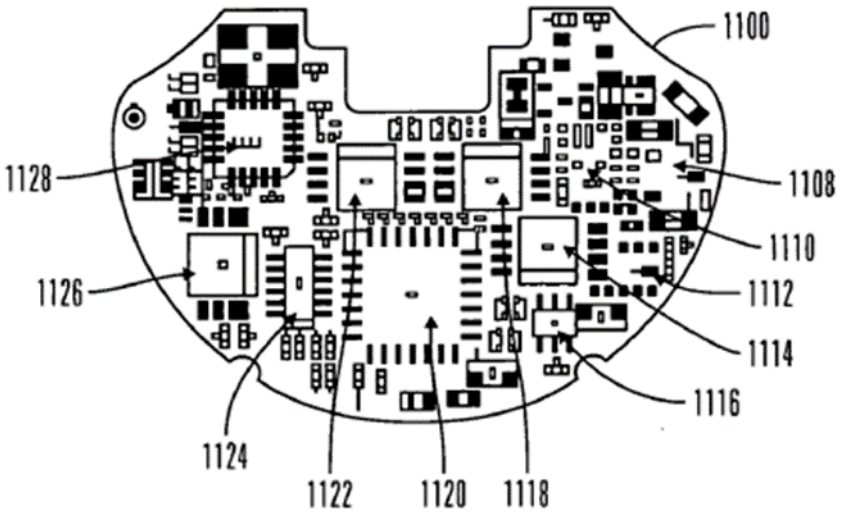

FIG. 19

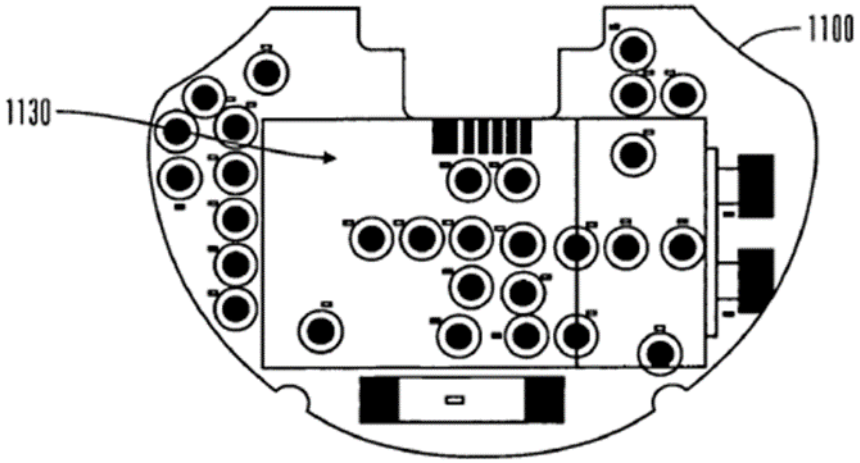

FIG. 20

(Ex1019, [0054], Figs. 19, 20.)

d) <u>[1.D]</u>

receive the sensor data from the glucose sensor and store the sensor data in the memory of the data processing and transmitter unit; process the sensor data using calibration data to provide processed sensor data, wherein the calibration data

comprises data associated with a sensitivity of the glucose sensor, and wherein the processed sensor data is stored in the memory of the data processing and transmitter unit; and

200. *Mastrototaro* discloses that transmitter 100 receives glucose data from sensor set 10 (including sensor 12) and processes signals with a processor (*e.g.*, processing electronics 124, microprocessor 1120):

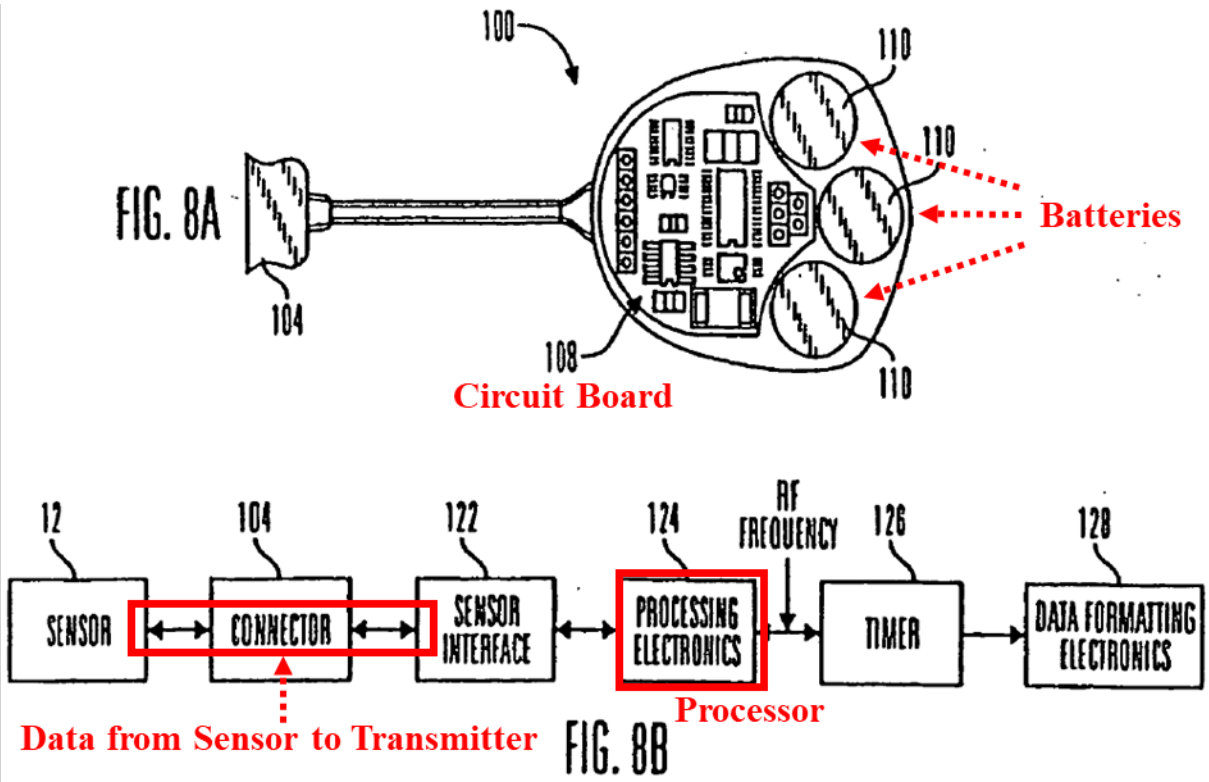

(Ex1019, [0007], [0041], Fig. 8B (annotated in red).) *Mastrototaro* provides for calibration of the sensor set using data received by the transmitter. (Ex1019, [0035].)

201. *Shahmirian* provides for calibration data, including blood glucose reference readings, to be transmitted to the monitoring system. (Ex1023, [0064].)

The monitoring system's processor executes a calibration algorithm to convert sensor data into calibrated sensor measurements:

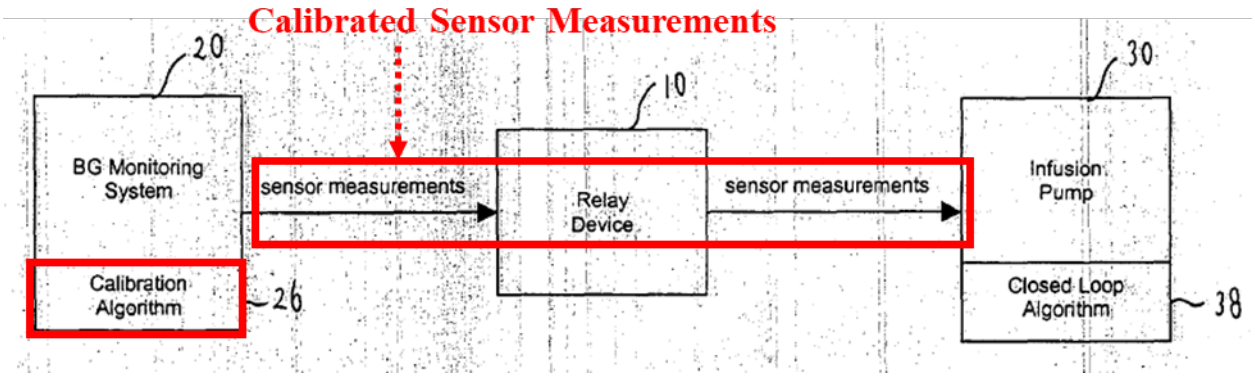

(Ex1023, [0015], [0104], [0106], Fig. 5(c) (annotated in red).)

202. *Shahmirian* discloses processing sensor signals with calibration data (*e.g.*, reference values) and sensitivity coefficients associated with sensor sensitivity. In view of the state-of-the-art, calibration algorithms use reference data (*e.g.*, blood glucose reference values) to determine the sensor's sensitivity coefficient based on the ratio of sensor current to blood glucose concentration. Glucose levels are then calculated by dividing sensor current by the sensitivity coefficient. (*See* paragraphs 37-40, 54 above; *see also* paragraph 97 above.)

203. *Shahmirian* discloses that the BG monitoring system (*e.g.*, glucose sensor and transmitter) stores raw glucose data and calibrated glucose measurements in memory. (Ex1023, [0063]; *see* paragraphs 41-46 (noting that sensor data must be stored throughout processing, transmission, and display) and 54 above, *see* also paragraph 95 above.)

e) **[1.E]**

transmit the processed sensor data over a Bluetooth wireless communication link using the radio frequency transceiver of the data processing and transmitter unit; and

204. *Patel*-2008 incorporates the connector and communication solutions described in *Shahmirian* and discloses that the glucose monitoring system and CED communicate directly over Bluetooth. (Ex1015, [0035], [0045].) *Shahmirian* discloses that the monitoring system includes a transmitter and/or receiver (*i.e.*, a transceiver) for communicating with external devices, like the infusion pump. (Ex1023, [0061]; *see* paragraph 61 above.) For example, *Mastrototaro* discloses RF transceiver 1128. (*See* paragraph 199 above.) Communications include "[c]alibrated sensor measurements … sent from the BG monitoring system 20 through the relay device 10 to the infusion pump 30:"

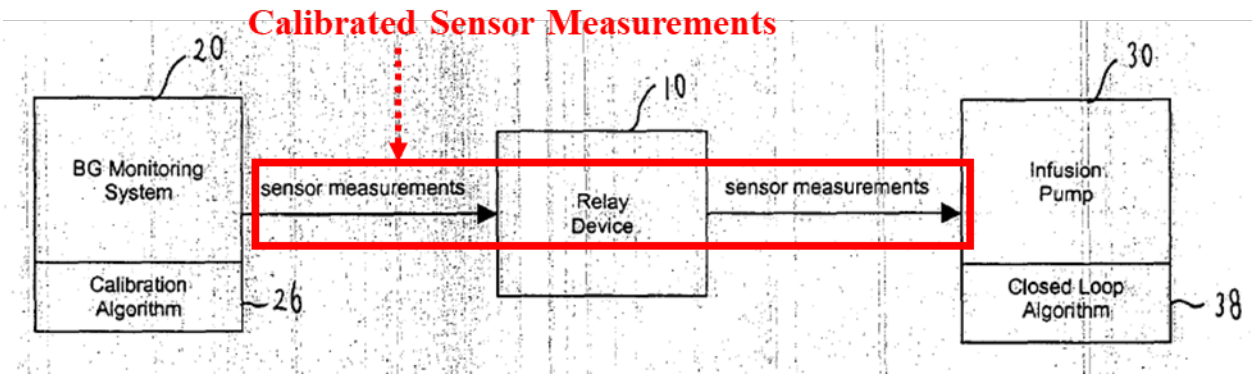

(Ex1023, [0106], Fig. 5(c) (annotated in red).) *Shahmirian* discloses the relay device incorporated into the infusion pump such that monitoring system 20 and infusion pump 30 communicate wirelessly using radio frequency, including over Bluetooth:

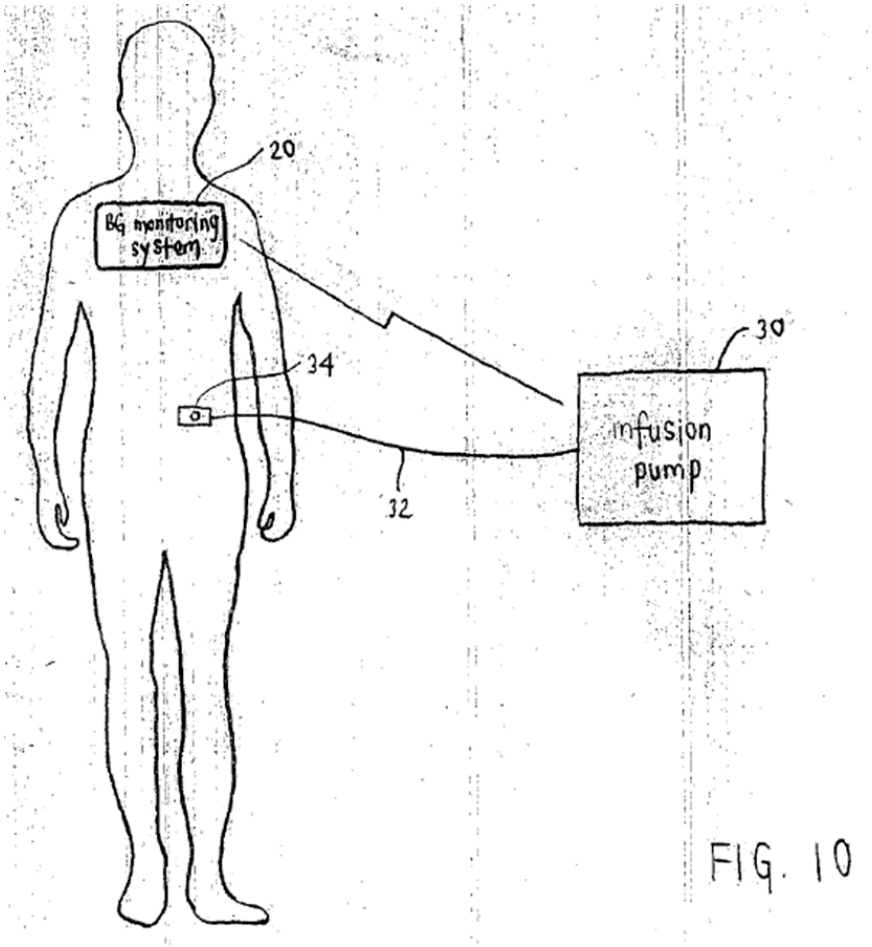

(Ex1023, [0081], [0089], Fig. 10.) Thereby providing direct Bluetooth communication between the glucose monitoring device and CED as disclosed in *Patel*-2008. (Ex1015, [0045].)

205. Alternatively, POSITAs would have found it obvious to transmit glucose measurements over Bluetooth. (*See* paragraphs 47-49, 54 above, *see also* paragraph 100 above.)

f) [1.F]

a receiver unit comprising a processor of the receiver unit, memory of the receiver unit, a radio frequency transceiver of the receiver unit, an antenna, and a display, wherein the receiver unit is configured to: receive, using the antenna and the radio frequency transceiver of the receiver unit, the processed sensor data over the Bluetooth wireless communication link,

206. *Shahmirian* discloses that infusion pump 30 receives calibrated glucose measurements over Bluetooth. (*See* paragraph 204 above.) Infusion pump 30 includes display 100, processor 150, internal memory device 154 (*e.g.*, ROM, DRAM, RAM, EPROM, flash memory), communication system 152 with a transmitter and/or receiver (*i.e.*, a transceiver), and antenna 268 as disclosed with communications board 265:

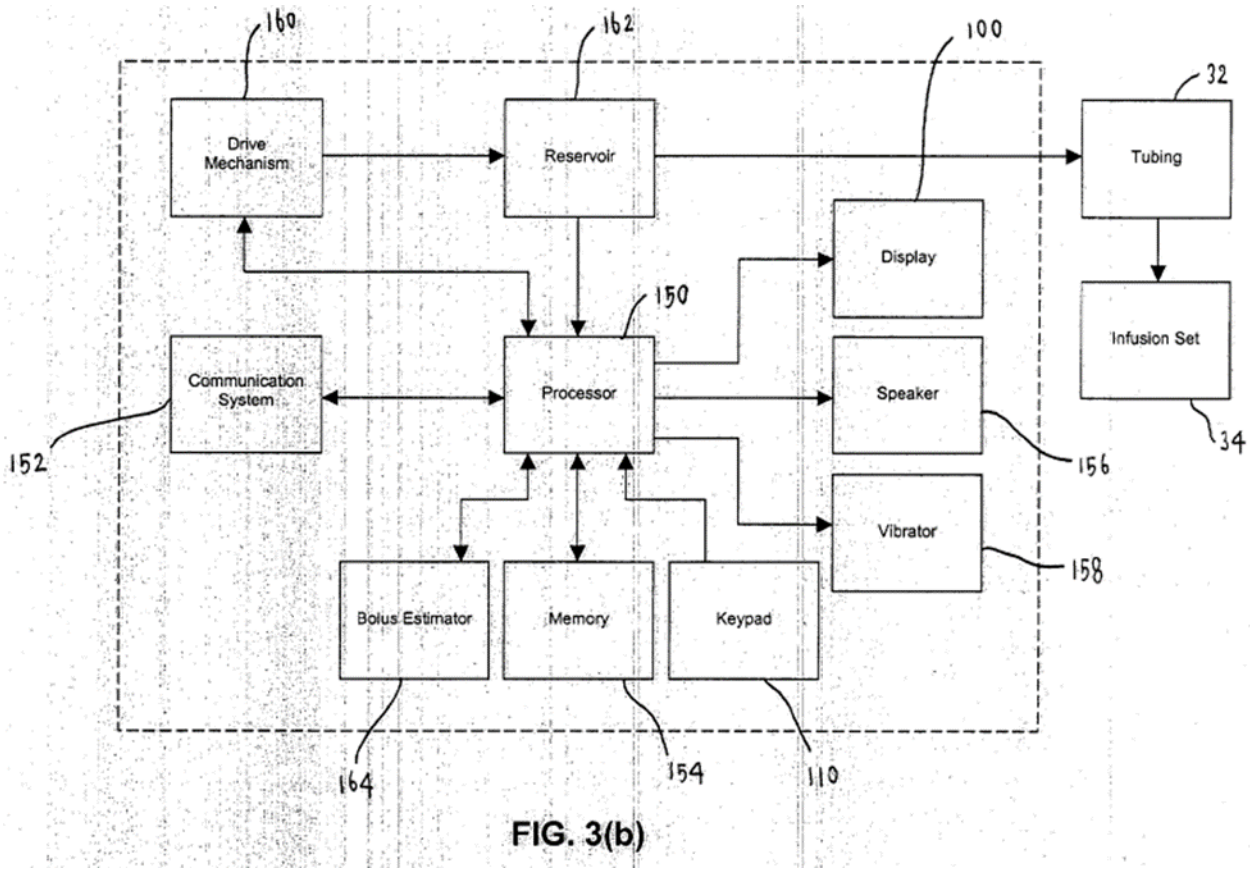

FIG. 3(b)

(Ex1023, [0066]-[0067], [0069], [0080], Fig. 3(b).)

207. In addition, *Causey* also discloses a monitor (*e.g.*, PDA, infusion pump) used to display measurements (*e.g.*, glucose levels and trend graphs). (Ex1017, 13:52-59, 14:20-23, 15:3-17.) The monitor includes display 2208, microprocessor 2216, ROM 2204, and RAM 2206:

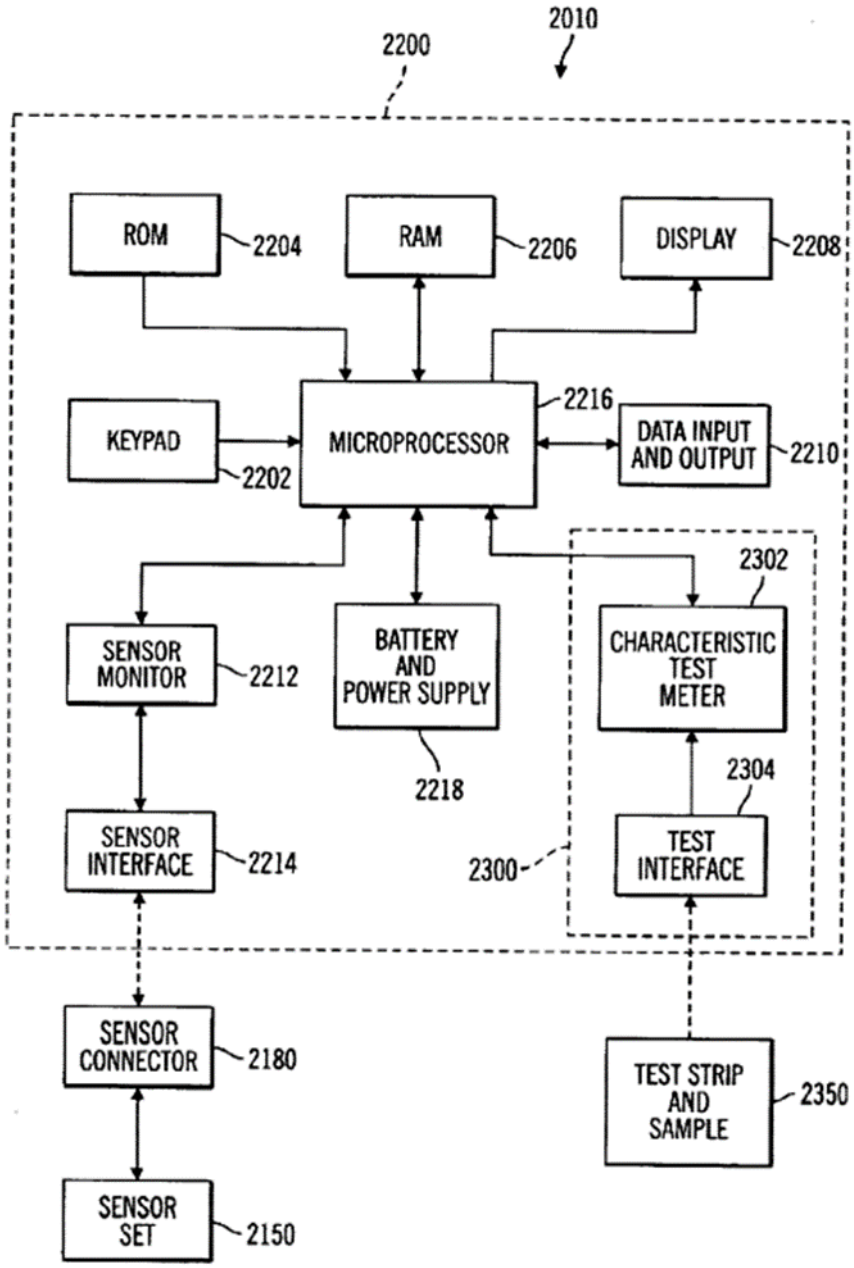

FIG. 30

(Ex1017, 15:17-25, Fig. 30.) The monitor receives glucose measurements as wireless RF signals from transmitter 2100:

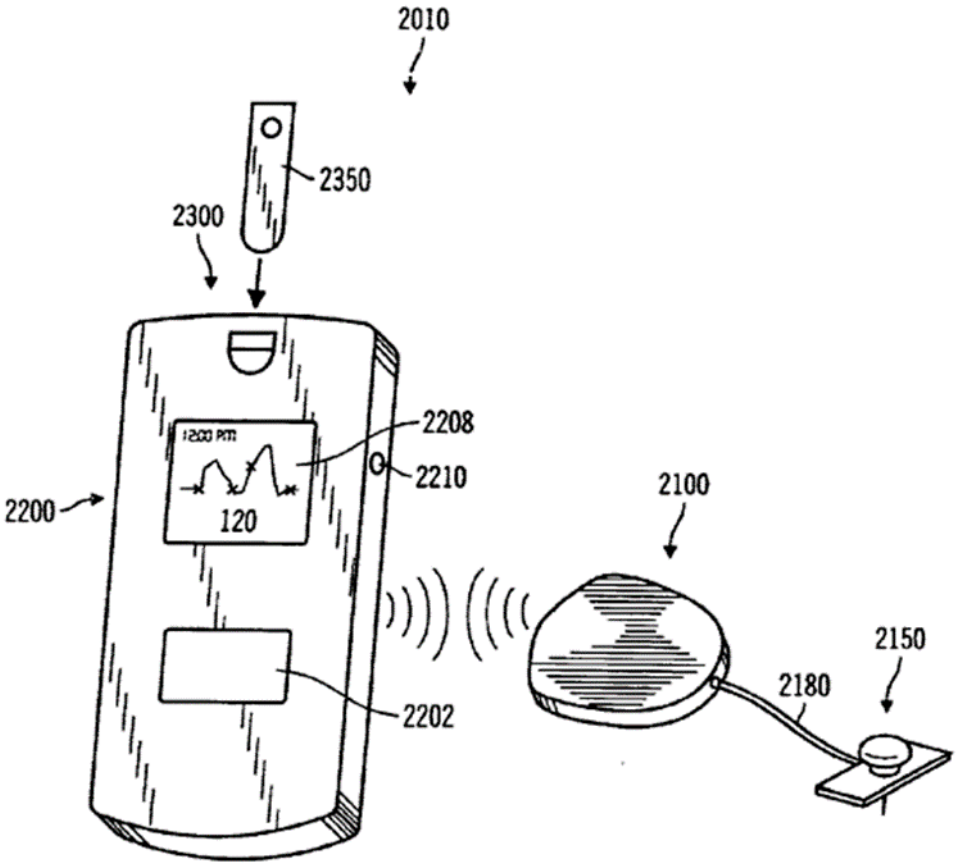

FIG. 31

(Ex1017, 13:52-56, 17:28-31, Fig. 31.) The monitor also updates, programs, and calibrates transmitter 2100. (Ex1017, 16:42-46.) POSITAs would recognize that communications are sent and received by an antenna and RF transceiver and would have found it obvious to receive glucose measurements over Bluetooth. (*See* paragraphs 47-49, 54, 61 above.)

208. Additionally, *Patel*-2008 also discloses a CED (*e.g.*, PDA/Smartphone) that obtains glucose monitoring data over Bluetooth, then stores and displays this data. (Ex1015, [0045], [0047].)

g) [1.G]

output to the display of the receiver unit, a numerical value representing the processed sensor data,

209. *Patel*-2008 discloses that the CED displays glucose data, including numerical glucose values:

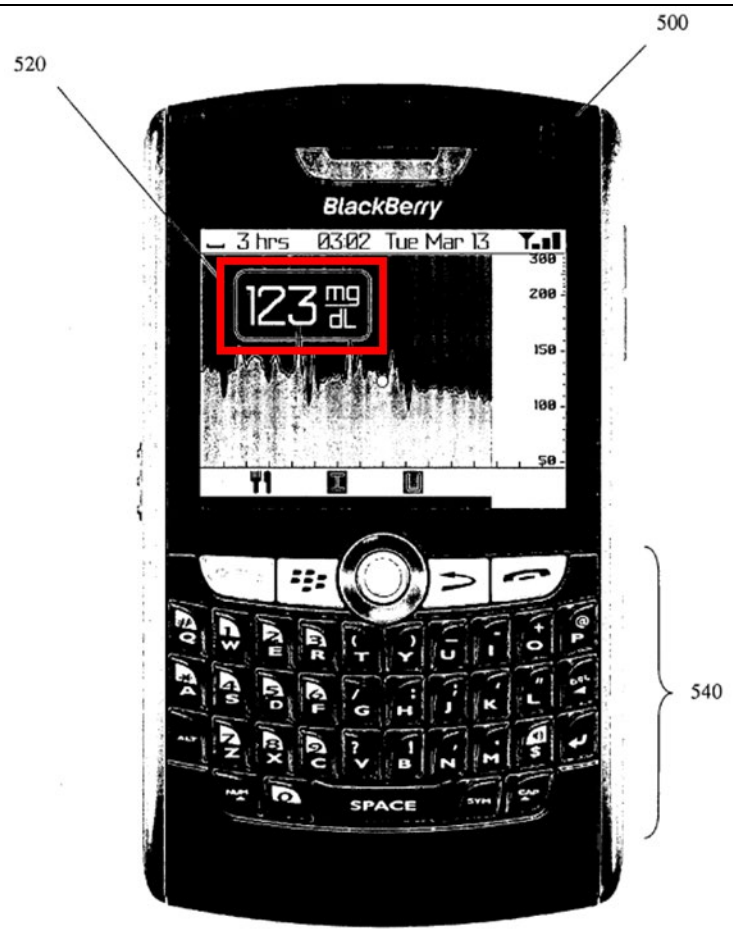

FIGURE 5

Ex1015, Fig. 5 (annotated in red)

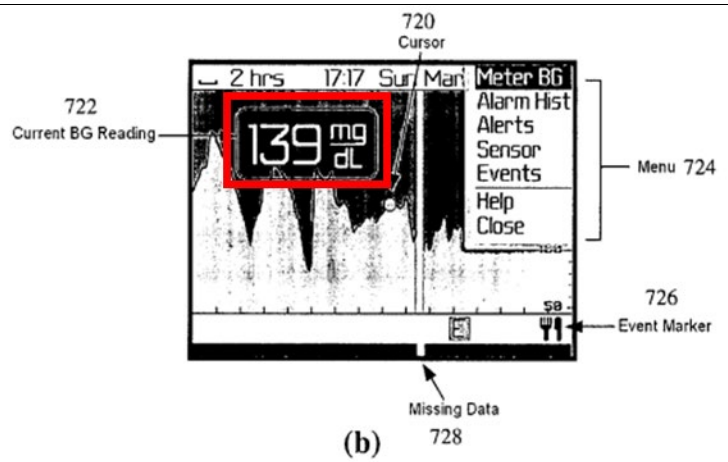

FIGURE 7

Ex1015, Fig. 7(b) (annotated in red)

(Ex1015, [0047], [0052], [0057].)

h) [1.H]

output to the display of the receiver unit, a first line graph that is a substantially continuous depiction of the processed sensor data over time,

210. *Patel*-2008 discloses software that displays glucose levels on axis 706 against time on axis 708:

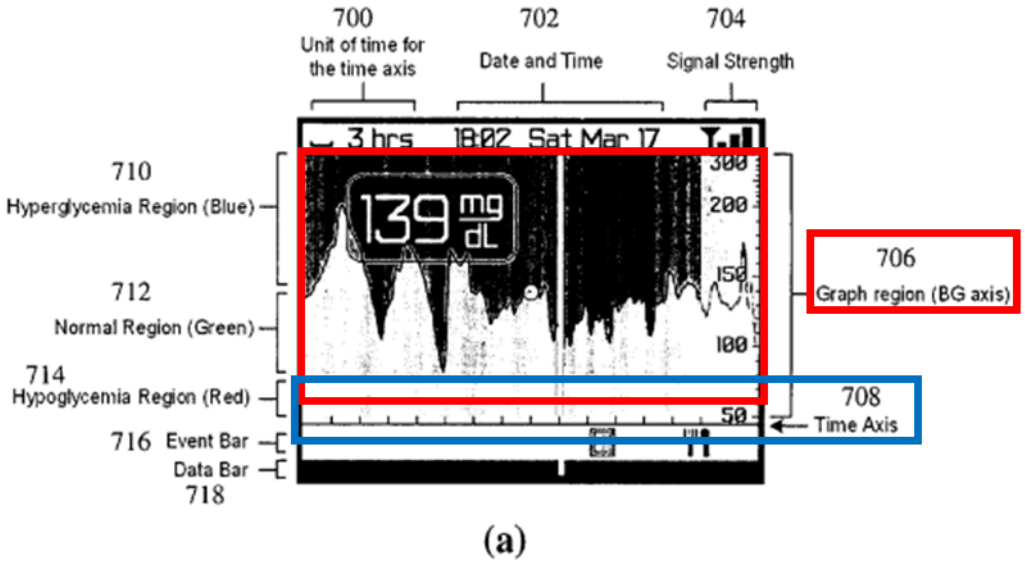

(Ex1015, [0056], Fig. 7(a) (annotated in red and blue).)

i) [1.I]

wherein the glucose monitoring system is configured to detect an adverse condition, wherein the adverse condition results in the receiver unit displaying a data gap such that the first line graph displayed on the receiver unit has an end corresponding to a time associated with a start of the adverse condition;

211. *Patel-2008* discloses detecting failed reception of sensor data and indicating missing data with "a blank white space during the time no data was received:"

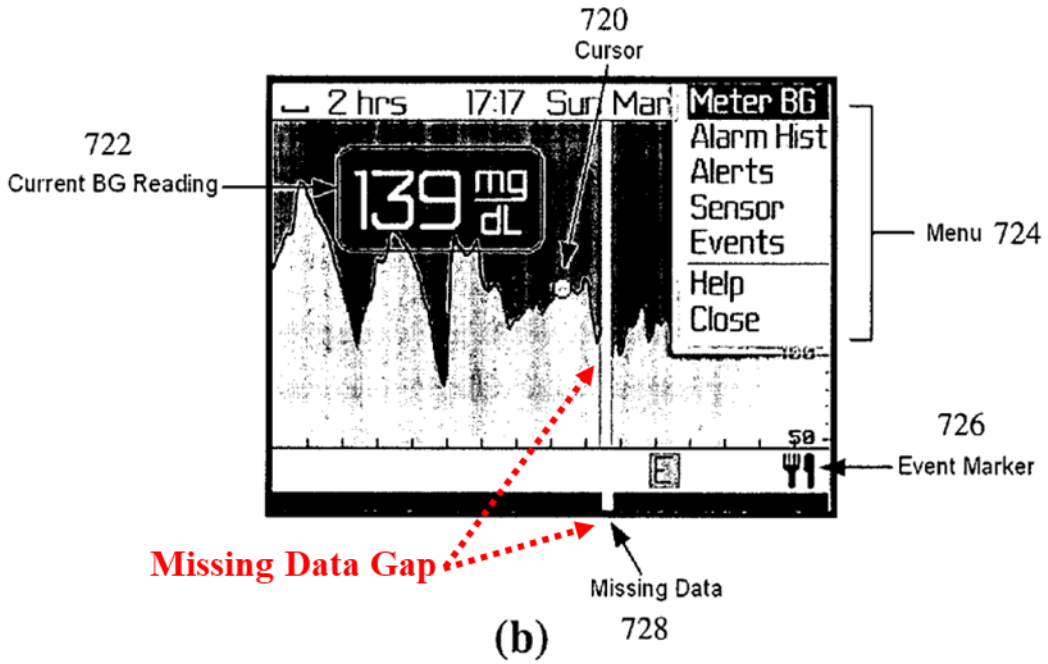

FIGURE 7

(Ex1015, [0057], Fig. 7(b) (annotated in red).) Conditions associated with out-of-range (*i.e.*, extreme) glucose readings and sensor calibration are also detected. (Ex1015, [0044].)

212. *Shahmirian* and *Causey* detect additional adverse conditions. *Shahmirian* discloses verifying receipt of sensor data by echoing it back to the transmitter to detect missing or inaccurate data. (Ex1023, [0102], [0111].) *Causey* discloses monitoring sensor data signals to determine conditions like rapidly changing, extreme, faulty, or interrupted glucose data and prompting or delaying calibration accordingly. (Ex1017, 22:28-45.)

j) [1.J]

wherein, during a time period corresponding to the adverse condition, sensor data, processed sensor data, or both, are stored in the memory of the data processing and transmitter unit;

213. *Shahmirian* discloses that raw and calibrated glucose data is stored in transmitter memory and that sensor data not received by the pump is retransmitted from the transmitter. (Ex1023, [0063] [0102]-[0103], [0111]; *see also* paragraphs 203, 212 above.) Data is stored during failed reception because the same missing glucose data is retransmitted. (*See* paragraph 60 above.)

k) [1.K]

wherein the receiver unit is configured to output to the display, after the adverse condition is corrected, processed sensor data for the time period corresponding to the adverse condition such that the data gap is backfilled, and

214. *Shahmirian* discloses retransmission of glucose data not received. Receipt of sensor data is verified by echoing it back to the transmitter. (Ex1023, [0102], [0111].) "[T]he infusion pump 30 indicates to the BG monitoring system 20 the most recent sensor data that the infusion pump 30 has received, and in response, the BG monitoring system 20 sends any additional sensor data that the BG monitoring system 20 has that has not been received by the infusion pump 30." (Ex1023, [0103].) "Once the sensor data is received, … the most recent sensor measurement" is displayed. (Ex1023, [0103].)

215. *Causey* also discloses updating display of glucose data to show newly calibrated glucose values and differences with previously displayed data. (Ex1017, 15:59-65.)

216. Additionally, POSITAs would recognize that retransmission or calibration of previously missing glucose data and the display of this data would fill in associated missing data gaps. (*See* paragraph 60 above.) Alternatively, considering *Shahmirian* and *Causey*'s disclosures, POSITAs would have found it obvious to re-populate glucose data gaps with retransmitted or newly calibrated data following failed communication or calibration. (*See* paragraphs 58-60 above.)

l) [1.L]

wherein the processed sensor data for the time period corresponding to the adverse condition that is outputted to the display after the adverse condition is corrected comprises a second line graph having a first end corresponding to the time associated with the start of the adverse condition and a second end corresponding to a time associated with an end of the adverse condition.

217. *Patel*-2008 discloses a glucose line graph with a missing data gap:

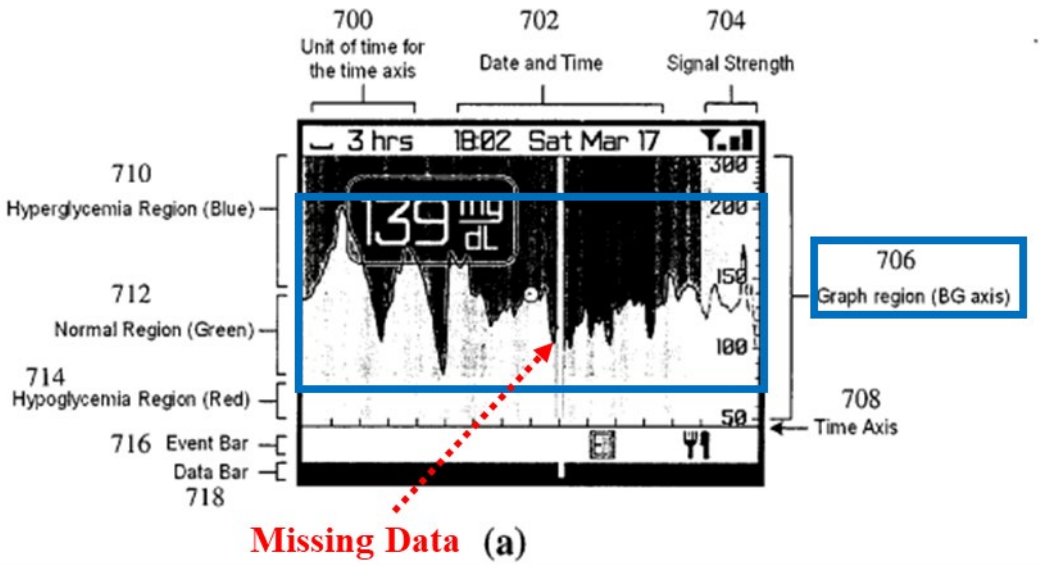

(Ex1015, [0057], Fig. 7(a) (annotated in red and blue).)

218. POSITAs would have found it obvious to display missing data on the same graph when retransmitted or newly calibrated. (*See* Paragraphs 60, 217 above.)

2. Claim 2

The glucose monitoring system of claim 1, wherein the first line graph and the second line graph are outputted to a same graph comprising a first axis having a time unit of measurement and a second axis having a glucose concentration unit of measurement.

219. *Patel*-2008 discloses software that displays glucose levels on axis 706 against time on axis 708:

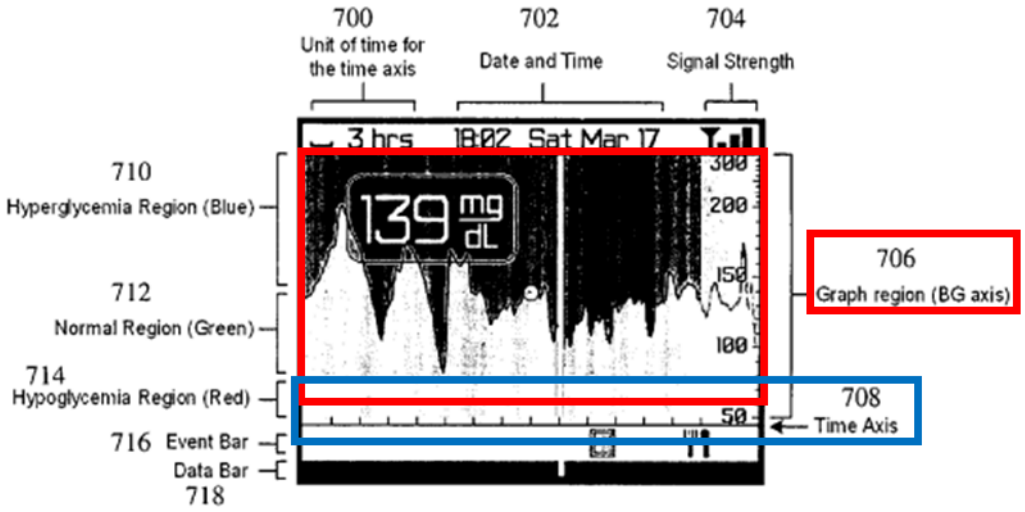

(a)

(Ex1015, [0056], Fig. 7(a) (annotated in red and blue).)

3. <u>Claim 3</u>

The glucose monitoring system of claim 1, wherein the adverse condition comprises a sensor communication error.

220. *Patel*-2008 provides that the glucose monitoring device includes a glucose transmitter and a sensor. (Ex1015, [0033].) When glucose data is not received, a missing data gap is displayed. (*See* paragraph 211 above.) Loss of communication between the monitor and transmitter also interrupts communication with the sensor, and with the collective glucose monitoring device. (*See* paragraph 58 above, *see also* paragraph 117 above.) *Shahmirian* discloses storage and retransmission of missing glucose data. (*See* paragraph 214 above.)

221. Alternatively, POSITAs would recognize a sensor communication error as an obvious cause of missing glucose data. (*See* paragraph 58 above.)

4. Claim 4

The glucose monitoring system of claim 1, wherein the adverse condition comprises a signal error associated with the glucose sensor.

222. *Causey* discloses monitoring sensor signals to detect faulty or interrupted glucose readings, prompting or delaying calibration based on these faulty or interrupted readings, and updating glucose graphs to display glucose data once calibrated. (Ex1017, 15:43-65, 22:28-45.) Therefore, glucose data would fill in glucose graphs once calibrated following faulty or interrupted glucose readings (*i.e.*, sensor signal error). (Ex1017, 15:59-65.)

223. Alternatively, POSITAs would have found it obvious to update glucose graphs to display glucose data calibrated following faulty or interrupted glucose readings and other sensor signal errors. (*See* paragraphs 59-60 above.)

5. Claims 5 And 6

[Claim 5] The glucose monitoring system of claim 1, wherein the adverse condition comprises a signal error associated with the data processing and transmitter unit.

[Claim 6] The glucose monitoring system of claim 1, wherein the adverse condition comprises a signal error associated with the receiver unit.

224. *Patel*-2008 discloses displaying a missing data gap when glucose data is not communicated from the transmitter to the monitor of a diabetes monitoring system. (*See* paragraph 211 above.) Communication failures are associated with the transmitter, monitor, or both. (*See* paragraphs 58, 119 above.) *Shahmirian* discloses storage and retransmission of missing glucose data. (*See* Section IX.D.1.(k), *supra*.)

225. Alternatively, POSITAs would recognize transmission and reception errors as obvious causes of missing glucose data. (*See* paragraph 58 above.)

6. Claim 7

The glucose monitoring system of claim 1, wherein the adverse condition comprises a system malfunction associated with the data processing and transmitter unit or a system malfunction associated with the receiver unit.

226. Missing glucose data from failed reception is a malfunction associated with the transmitter, monitor, or both. (*See* paragraph 223 above; *see also* paragraph 120 above.)

227. Alternatively, POSITAs would recognize transmitter and/or receiver system malfunctions as an obvious cause of missing data. (*See* paragraph 58 above.)

7. Claim 8

The glucose monitoring system of claim 1, wherein the adverse condition comprises an inability of the receiver unit to display or output at least a portion of the first line graph.

228. *Patel*-2008 discloses displaying a missing data gap when glucose data is not received (Ex1015, [0057]) because data cannot be displayed unless received. (*See* paragraph 58 above, paragraph 24 below; *see also* paragraph 121 above.)

229. Alternatively, POSITAs would recognize the failed reception of glucose data as an obvious cause of the inability to display this data. (*See* paragraph 58 above.)

8. Claim 9

The glucose monitoring system of claim 1, wherein the adverse condition comprises a sensor instability condition.

230. *Patel*-2008 discloses calibration with blood glucose reference values. (Ex1015, [0054].)

231. *Causey* discloses monitoring sensor signals and delaying calibration until "sensor data readings are relatively stable," and discloses updating glucose graphs to display glucose data once calibrated. (Ex1017, 15:43-65, 22:28-36.) Therefore, glucose data would fill in glucose graphs once calibrated following sensor instability. (Ex1017, 15:59-65.)

232. Alternatively, POSITAs would have found it obvious to update glucose graphs to display glucose data calibrated following sensor instability. (*See* paragraphs 59-60 above.)

9. Claim 10

The glucose monitoring system of claim 1, wherein the adverse condition comprises a calibration failure condition.

233. *Causey* and Paradigm® REAL-Time disclose calibration errors due to sensor stabilization, rapidly changing glucose, blood glucose reference errors, and other conditions. (Ex1017, 22:28-45; Ex1011, 10, 75.) *Causey* discloses updating glucose graphs to display newly calibrated glucose values following calibration errors. (*See* paragraph 159 above, paragraphs 169, 171, 173 below.) Therefore, glucose data would fill in glucose graphs once calibrated following calibration error. (Ex1017, 15:59-65.)

234. Alternatively, POSITAs would have found it obvious to update glucose graphs to display glucose data calibrated following calibration errors. (*See* paragraphs 59-60 above.)

10. Claim 11

The glucose monitoring system of claim 1, wherein the adverse condition comprises a monitoring system failure condition.

235. *Patel*-2008 discloses and system that includes a glucose monitoring device and a consumer electric device. (*See* paragraph 176 above.)

236. Failures and malfunctions associated with the sensor, transmitter, or monitor are monitoring system failures. (*See* paragraphs 58, 220, 224 above; *see also* paragraph 122 above.)

237. Alternatively, POSITAs would recognize a monitoring system failure as an obvious cause of missing glucose data. (*See* paragraph 58 above.)

11. <u>Claim 12</u>

[12] The glucose monitoring system of claim 1, wherein the glucose sensor comprises a working electrode and a counter electrode.

238. Like *Patel*-2009 (*see* paragraph 124 above), *Mastrototaro* discloses sensor 12 with sensor electrodes 20:

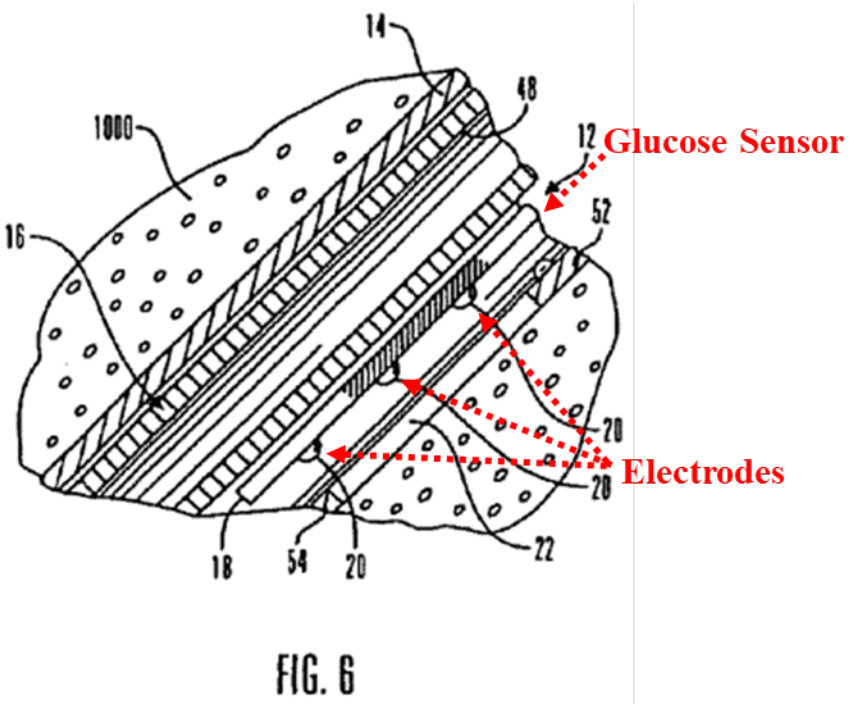

(Ex1019, [0043], Fig. 6 (annotated in red).) *Mastrototaro* also discloses transmission of a counter electrode voltage (*i.e.*, "counter voltage"). (Ex1019, [0062]-[0063].)

Considering this disclosure, well-known analyte sensors, and background of the ’056 patent (*see* paragraphs 32-36, 54 above), POSITAs would recognize that electrodes 20 include a counter electrode.

12. Claim 14

The glucose monitoring system of claim 1, wherein the on body unit further comprises a temperature sensor, and wherein the adverse condition comprises a temperature measurement outside a predetermined range.

239. *Mastrototaro* discloses that sensor set 10 monitors temperature and uses the relationship between glucose sensor activity and temperature to determine sensor calibration. (Ex1019, [0042].) *Shahmirian* also discloses that the glucose sensor measures temperature. (Ex1023, [0052].)

240. *Causey* discloses or renders obvious updating display of glucose data to show data calibrated following new or updated calibration. (*S*ee paragraph 144 above.)

241. Considering these disclosures, POSITAs would have found it obvious to delay calibration until temperature is within range and display newly calibrated glucose data following this calibration. (*See* paragraph 59-60 above.)

13. Claim 15

The glucose monitoring system of claim 1, wherein the adverse condition comprises an analyte level exceeding a predetermined threshold.

242. *Causey* discloses prompting calibration based on glucose level excursions and updating glucose graphs to display glucose data once calibrated. (Ex1017, 15:43-65, 22:28-45.) Therefore, glucose data would fill in glucose graphs once calibrated following glucose excursions. (Ex1017, 15:59-65.)

243. Alternatively, POSITAs would have found it obvious to update glucose graphs to display glucose data calibrated following glucose level excursions. (*See* paragraphs 59-60 above.)

14. Claim 16

The glucose monitoring system of claim 1, wherein the adverse condition comprises a rate of change of an analyte level exceeding a predetermined threshold.

244. *Causey* discloses prompting calibration following rapidly changing glucose levels and updating glucose graphs to display glucose data once calibrated. (Ex1017, 15:43-65, 22:28-45.) Therefore, glucose data would fill in glucose graphs once calibrated following rapid glucose change. (Ex1017, 15:59-65.)

245. Alternatively, POSITAs would have found it obvious to update glucose graphs to display glucose data calibrated following rapid changes in glucose level. (*See* paragraphs 59-60 above.)

15. Claim 17

The glucose monitoring system of claim 1, wherein the adverse condition comprises a data unavailability condition.

246. *Patel*-2008 discloses displaying a missing data gap when glucose data is unavailable because it was not received. (*See* paragraph 211 above; *see also* paragraph 228 above.)

16. Claim 18

The glucose monitoring system of claim 1, wherein the receiver unit is further configured to display the second line graph immediately after the correction of the adverse condition.

247. *Shahmirian* discloses that "[o]nce the sensor data is received, … the most recent sensor measurement" is displayed. (Ex1023, [0103].)

17. Claim 20

The glucose monitoring system of claim 1, wherein the data processing and transmitter unit, the receiver unit, or both is further configured to store time information associated with the adverse condition.

248. *Patel*-2008 discloses a glucose graph which confirms when data was received and identifies when "no data was received" with missing data gap 728 graphed against data bar 718 and time axis 708:

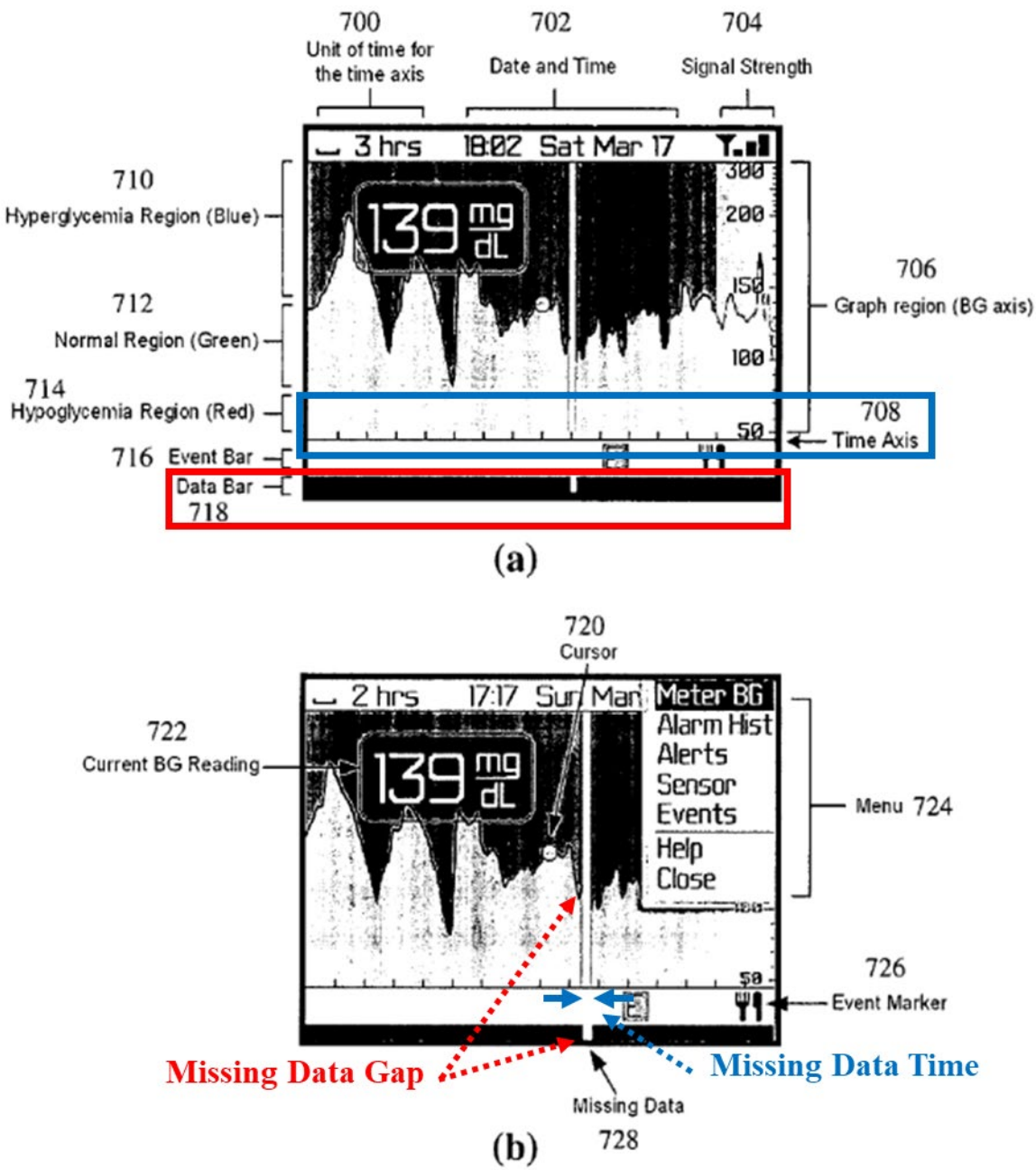

FIGURE 7

(Ex1015, [0056]-[0057], Fig. 7(a)/(b) (annotated in red and blue).) Therefore, data bar 718 stores the timing of conditions associated with missing glucose data.

249. Alternatively, POSITAs would recognize that *Shahmirian* necessarily store timing information in order to verify receipt of glucose data retransmit missing data. (*See* paragraphs 60, 187, 213 above.)

18. <u>Claim 21</u>

The glucose monitoring system of claim 1, wherein the data processing and transmitter unit and at least a portion of the glucose sensor are disposed within a single integrated housing.

250. *Mastrototaro* provides that transmitter 100' fits directly onto and is supported by sensor set 10' itself:

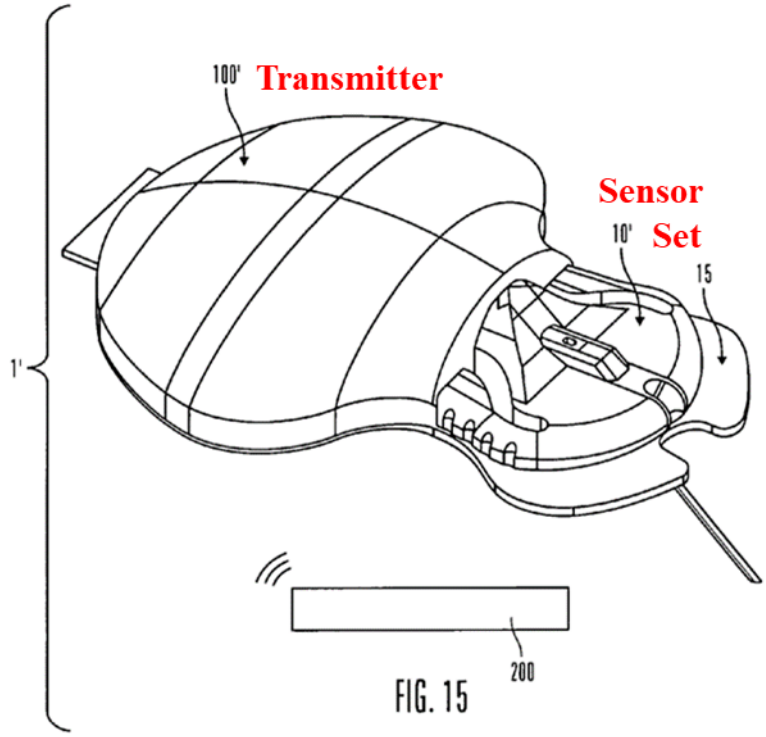

(Ex1019, [0050], Fig. 15 (annotated in red).) For example, *Mastrototaro* discloses discarding the transmitter and directly connected sensor set together after the 3 to 5 day use period. (Ex1019, [0050].)

19. Claim 22

The glucose monitoring system of claim 1, wherein the receiver unit comprises a mobile phone.

251. *Patel*-2008 discloses a PDA/Smartphone (*e.g.*, Blackberry, Apple iPhone) as the CED, and that glucose monitoring software operates on "Windows CE, Windows Mobile, … iPhone Operating System." (Ex1015, [0034], [0039].)

20. Claim 23

The glucose monitoring system of claim 1, wherein the time period associated with the adverse condition comprises at least one hour.

252. *Shahmirian* discloses storage of raw and calibrated glucose data. (*See* paragraph 203 above.) POSITAs would have found it obvious to install sufficient memory and store over one hour of glucose data. (*See* paragraphs 45, 76 above; *see also* paragraphs 42-43 above.)

21. Claim 24

The glucose monitoring system of claim 1, wherein the glucose monitoring system is further configured for periodic calibration, and wherein the calibration data is based at least in part on glucose reference data received after the portion of the glucose sensor has been positioned under the skin of the user.

253. *Patel*-2008 provides that glucose sensors are periodically re-calibrated with blood glucose reference values (step 618) after being inserted and initialized (step 616) and once glucose monitoring is active (step 620):

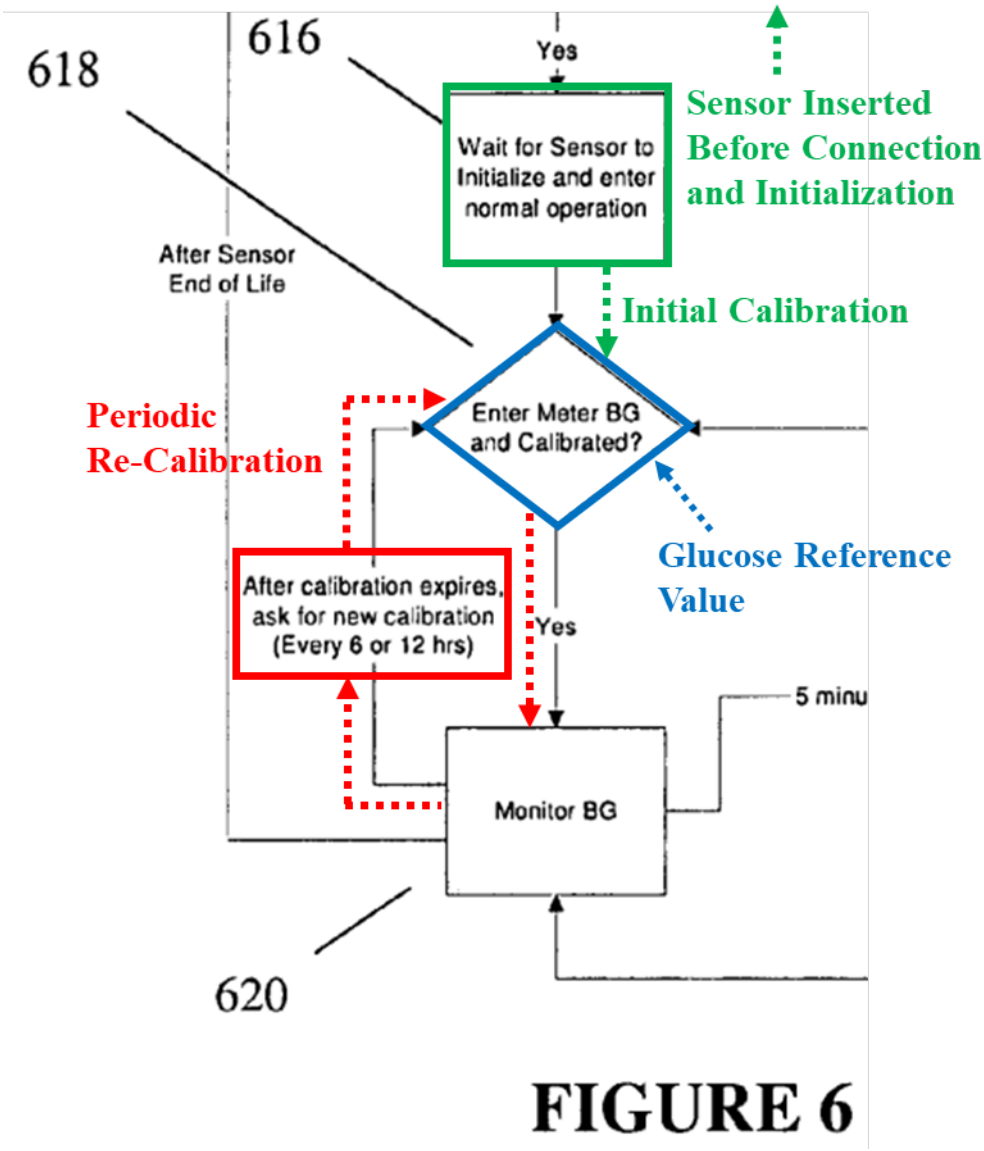

(Ex1015, [0054]-[0055], [0059], Fig. 6 (annotated in red, green, and blue).)

22. Claim 25

The glucose monitoring system of claim 24, wherein the adverse condition comprises a signal error associated with the blood glucose reference data.

254. *Causey* discloses updating glucose graphs to display glucose data once calibrated. (Ex1017, 22:28-45.) Therefore, glucose data would fill in glucose graphs once calibrated following blood glucose reference error. (Ex1017, 15:59-65.)

255. Alternatively, POSITAs would have found it obvious to update glucose graphs to display glucose data calibrated following blood glucose reference error. (*See* paragraphs 59-60 above.)

23. Claim 26

The glucose monitoring system of claim 24, wherein the glucose monitoring system is further configured for calibration twelve hours after the portion of the glucose sensor has been positioned under the skin of the user.

256. *Patel*-2008 discloses re-calibration every 12 hours. (*See* paragraph 253 above (annotated in red).) *Mastrototaro* discloses omitting the sensor initialization sequence when stabilization time is not a factor. (Ex1019, [0060].)

24. Claim 27

The glucose monitoring system of claim 1, wherein the data processing and transmitter unit is configured to transition from a low-power mode to an operating mode, and wherein the data processing and transmitter unit consumes more power from the power supply in the operating mode than in the low-power mode.

257. *Mastrototaro* discloses circuitry for the transmitter to detect connection with the sensor set and a sensor on/off button (*e.g.*, power switch 1112), each to conserve power when the sensor is disconnected or turned off. (Ex1019, [0041], [0055].)

25. Claim 28

The glucose monitoring system of claim 1, wherein the power supply of the data processing and transmitter unit is configured to provide power for about three months of continuous operation.

258. *Mastrototaro* discloses transmitter batteries that provide power for 3 months to 2 years. (Ex1019, [0055].)

26. Claim 30

The glucose monitoring system of claim 1, wherein the glucose sensor is further configured to continuously sample the biological fluid of the user to provide the sensor data.

259. *Patel*-2008 discloses that "glucose sensor 130 is a continuous glucose sensor capable of taking readings from a user on a continuous … basis throughout the day." (Ex1015, [0038].) *Mastrototaro* and *Shahmirian* supplement *Patel*-2008 by disclosing that sensor readings may be provided on a continuous basis. (Ex1019, [0035]; Ex1023, [0052], [0060].)

I, Brian Gross, do hereby declare and state, that all statements made herein of my own knowledge are true and that all statements made on information and belief are believed to be true; and further that these statements were made with the knowledge that willful false statements and the like so made are punishable by fine or imprisonment, or both, under Section 1001 of Title 18 of the United States Code.

Dated: 24 JULY, 2023