US007997259B2

(12) **United States Patent**
Wilson

(10) **Patent No.: US 7,997,259 B2**
(45) **Date of Patent: Aug. 16, 2011**

(54) **COMPOUND ARCHERY BOW**

(75) Inventor: **Dennis Anthony Wilson**, Kathleen, GA (US)

(73) Assignee: **Rex Darlington**, Hale, MI (US)

(*) Notice: Subject to any disclaimer, the term of this patent is extended or adjusted under 35 U.S.C. 154(b) by 437 days.

(21) Appl. No.: **12/290,750**

(22) Filed: **Nov. 3, 2008**

(65) **Prior Publication Data**

US 2010/0051005 A1 Mar. 4, 2010

Related U.S. Application Data

(60) Provisional application No. 61/014,834, filed on Dec. 19, 2007.

(51) **Int. Cl.**
F41B 5/10 (2006.01)

(52) **U.S. Cl.** **124/25.6**

(58) **Field of Classification Search** 124/25.6, 124/900

See application file for complete search history.

(56) **References Cited**

U.S. PATENT DOCUMENTS

3,990,970	A	11/1976	Ketchum
4,401,097	A	8/1983	Simonds
4,438,753	A	3/1984	Simonds
4,519,374	A	5/1985	Miller
4,774,927	A	10/1988	Larson
4,838,236	A	6/1989	Kudlacek
4,926,832	A	5/1990	Darlington
4,926,833	A	5/1990	Darlington
4,967,721	A	11/1990	Larson

(Continued)

FOREIGN PATENT DOCUMENTS

CA	2183305	2/1997

OTHER PUBLICATIONS

Mulloney, "One Step Beyond the Compound?" Archery World, Sep. 1976.

(Continued)

Primary Examiner — John Ricci
(74) *Attorney, Agent, or Firm* — Reising Ethington P.C.

(57) **ABSTRACT**

A compound archery bow includes a handle having projecting limbs, and first and second pulleys mounted on the limbs for rotation around respective axes. At least a first of the pulleys includes a flat base with a bowstring let-out groove on the base and a bowstring anchor adjacent to the bowstring let-out groove. A draw module is disposed on the base, a cable groove extends along the draw module, and first and second cable anchors are disposed on the base adjacent to respective ends of the cable groove. The cable groove on the draw module is continuous in a plane perpendicular to the axis of the first pulley. A bow cable arrangement includes a bowstring cable extending from the bowstring anchor on the first pulley around the bowstring let-out groove and then toward the second pulley. A first cable extends from the first anchor on the first pulley through a portion of the cable groove on the module and then toward the second pulley. A second cable extends from the second anchor toward the second pulley. Draw of the bowstring cable away from the bow handle lets out bowstring cable from the bowstring cable groove on the first pulley and rotates the first pulley around its axis, lets out the first cable from the groove on the module and takes up the second cable into the groove on the module including a portion of such groove previously occupied by the first cable.

14 Claims, 12 Drawing Sheets

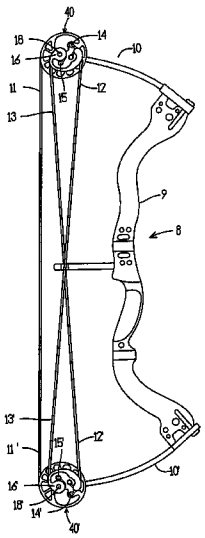

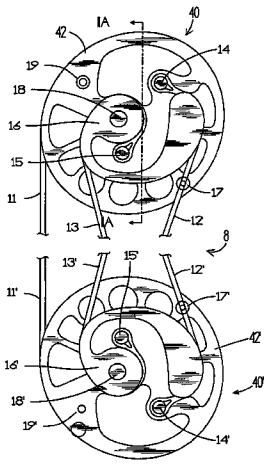

U.S. PATENT DOCUMENTS

4,976,250	A	12/1990	Jeffrey	
4,986,250	A	1/1991	Darlington	
5,092,309	A	3/1992	Beaton	
5,301,651	A	4/1994	LaBorde et al.	
5,368,006	A	11/1994	McPherson	
5,433,792	A	7/1995	Darlington	
5,505,185	A	4/1996	Miller	
5,649,522	A	7/1997	Troncoso	
5,678,529	A	10/1997	Larson	
5,782,229	A	7/1998	Evans et al.	
5,791,322	A	8/1998	McPherson	
5,934,265	A	8/1999	Darlington	
5,975,067	A	11/1999	Strother	
6,082,347	A	7/2000	Darlington	
6,112,732	A	9/2000	Larson	
RE37,544	E	2/2002	Darlington	
6,446,619	B1 *	9/2002	McPherson	124/25.6
6,516,790	B1	2/2003	Darlington	
6,666,202	B1	12/2003	Darlington	
6,688,295	B1	2/2004	Miller	
6,990,970	B1	1/2006	Darlington	
2009/0188482	A1	7/2009	Strother	
2009/0255520	A1	10/2009	Strother	
2009/0288650	A1	11/2009	Batdorf	

OTHER PUBLICATIONS

"Graham Take-Down Dynabo," Archery World, Jun./Jul. 1980.
Patent application of Larry D. Miller for "Archery Bow Assembly," date and serial No. unknown.
Alpine Archery Bow Manual, 1989.
"Instruction Manual—York Thunderbolt DynaBo," York Archery.
"M-10 Dynabo Draw Chart," Martin Archery, Inc.
M-10 Cheetah DynaBo Owner's Manual, Martin Archery.
Bow Cam Drawings received in 2008 and apparently filed in the USPTO in 2005.

* cited by examiner

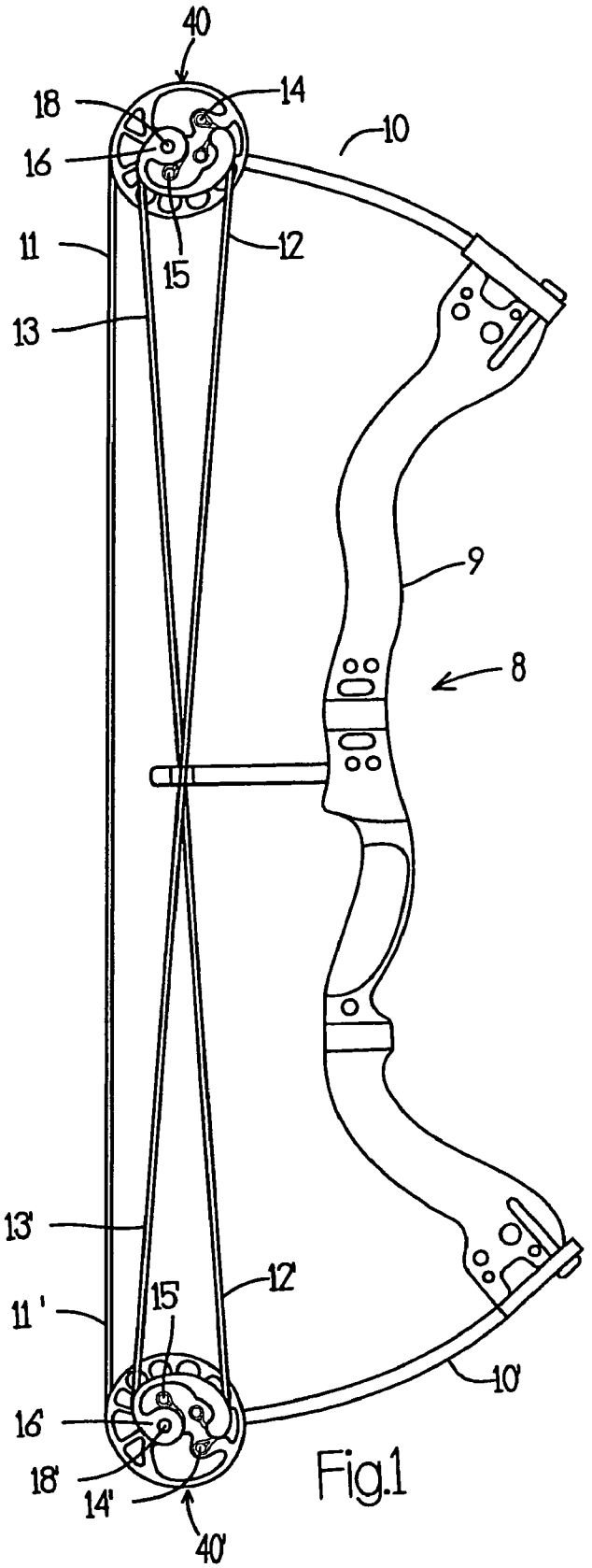

Fig.1

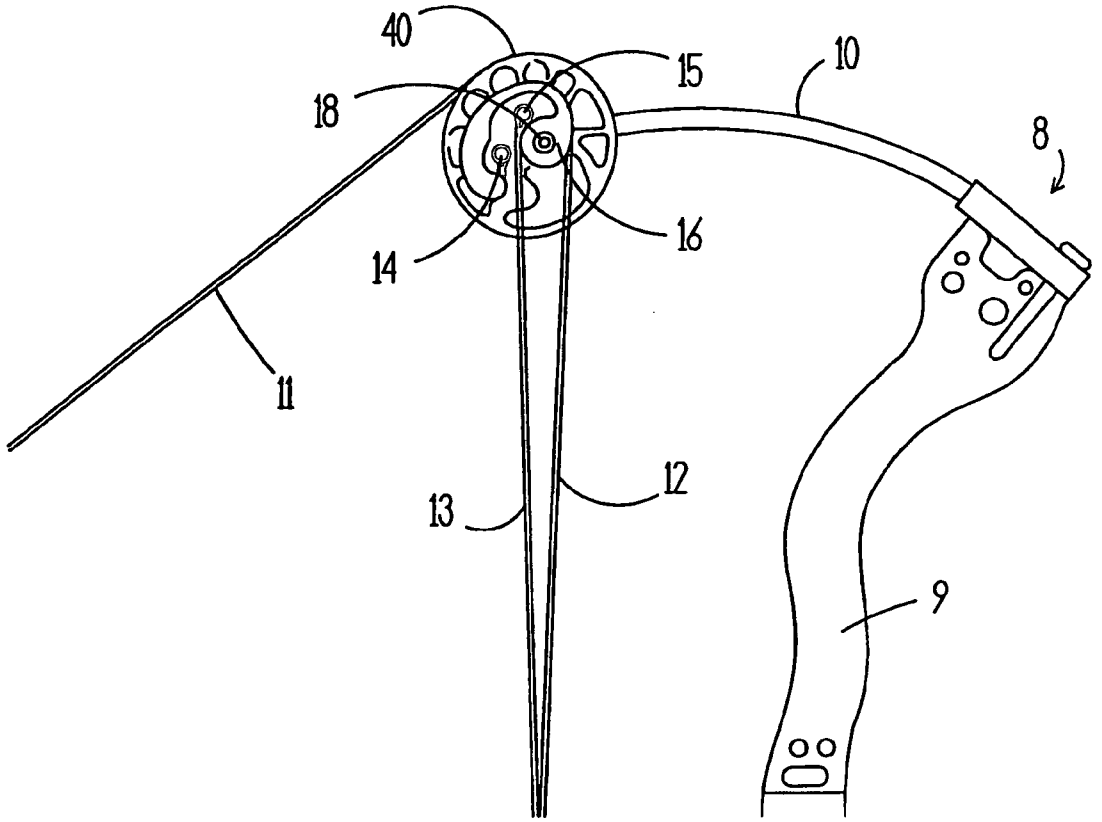

Fig. 1a

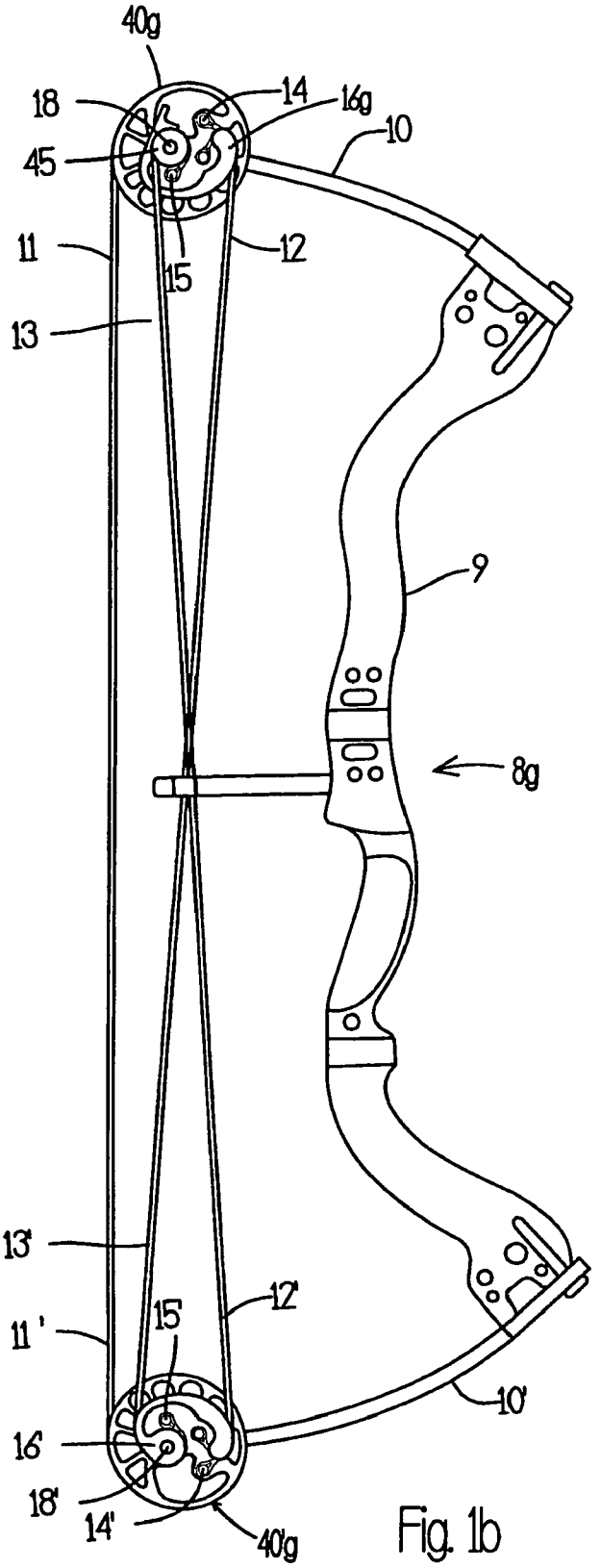

Fig. 1b

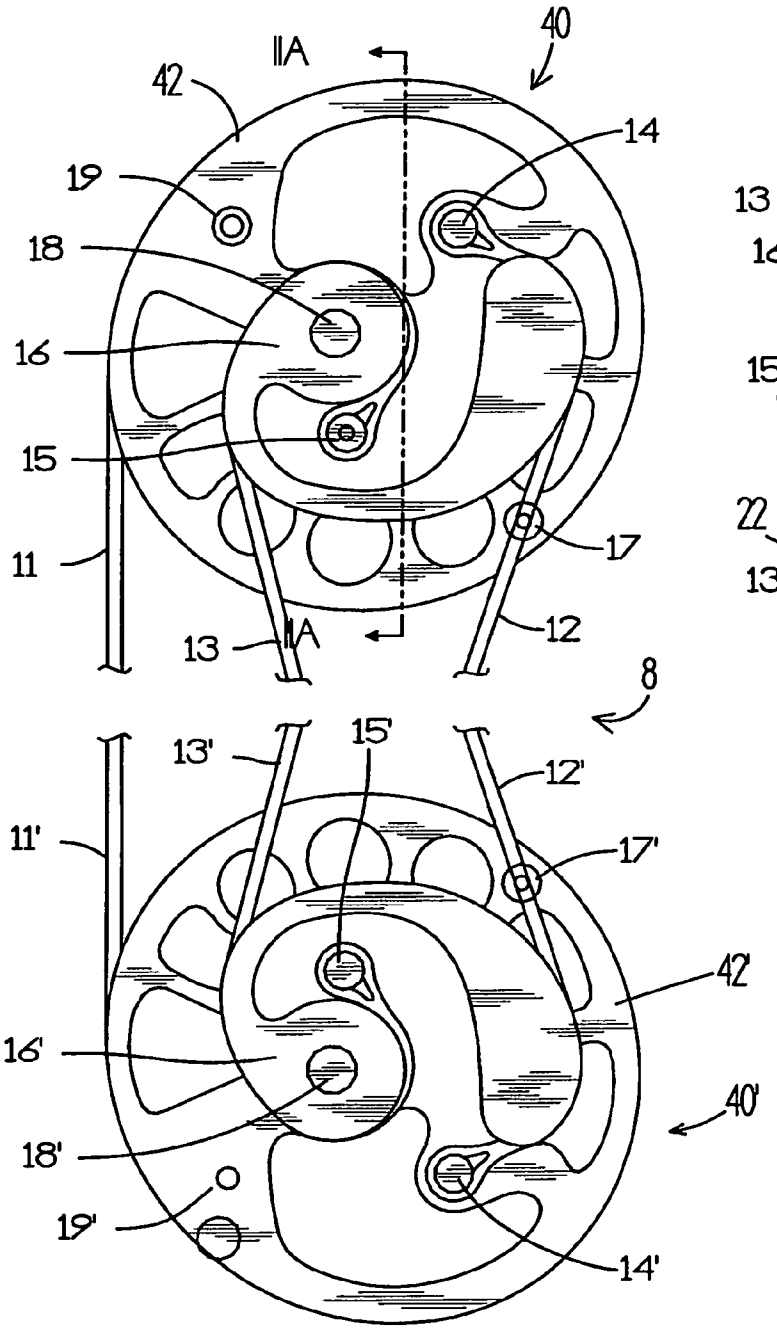
40
IIA
42
14
19
18
16
15
11
17
13
IIA
12
8
13'
15'
12'
11'
17'
42'
16'
40'
18'
19'
14'

Fig.2

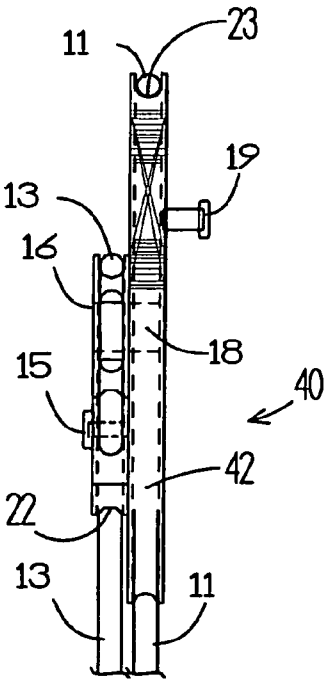
11
23
19
13
16
18
15
40
42
22
13
11

Fig.2A

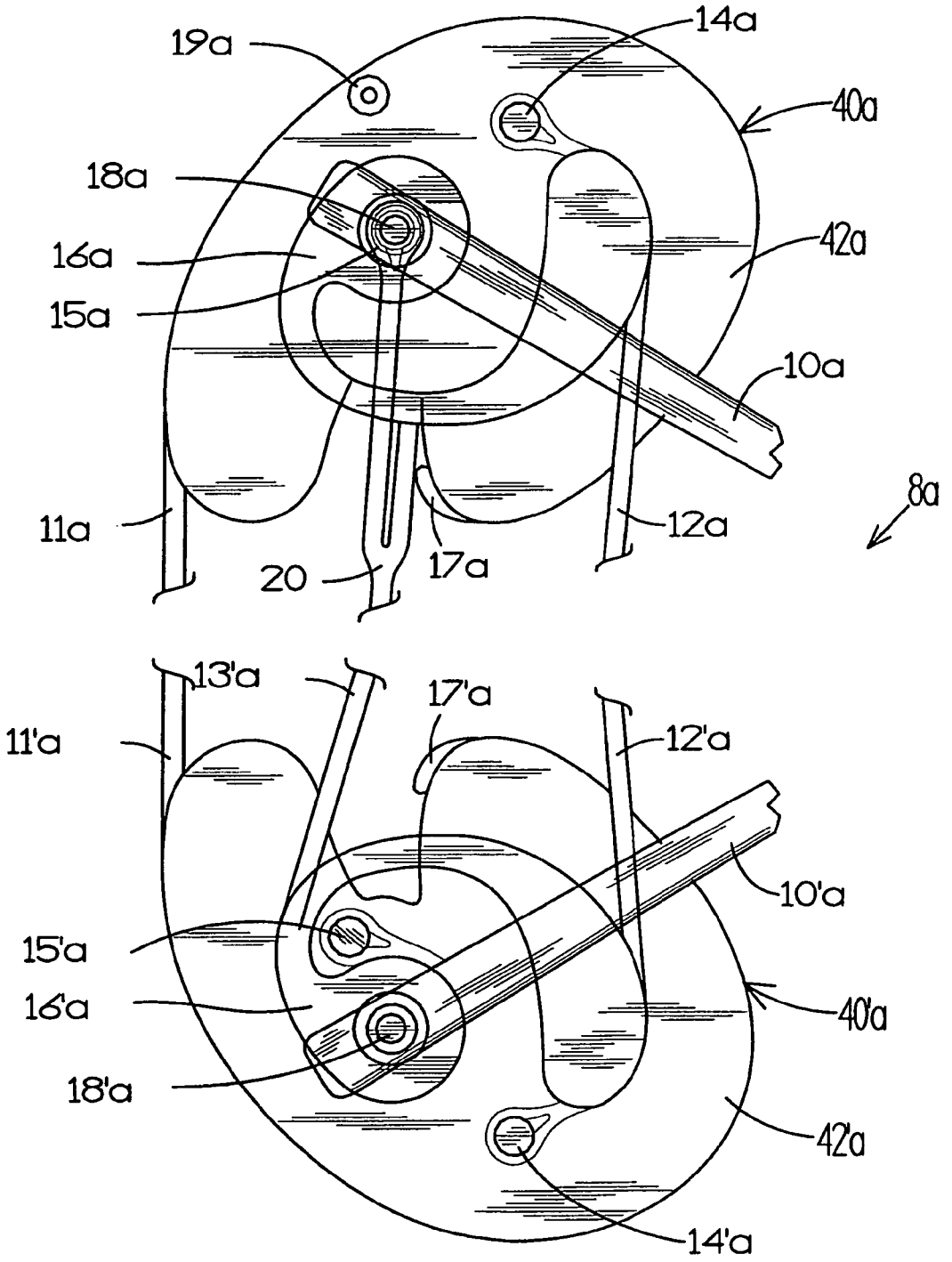
19a
14a
40a
18a
42a
16a
15a
10a
8a
11a
12a
20
17a
13'a
17'a
11'a
12'a
10'a
15'a
16'a
40'a
18'a
42'a
14'a

Fig.3

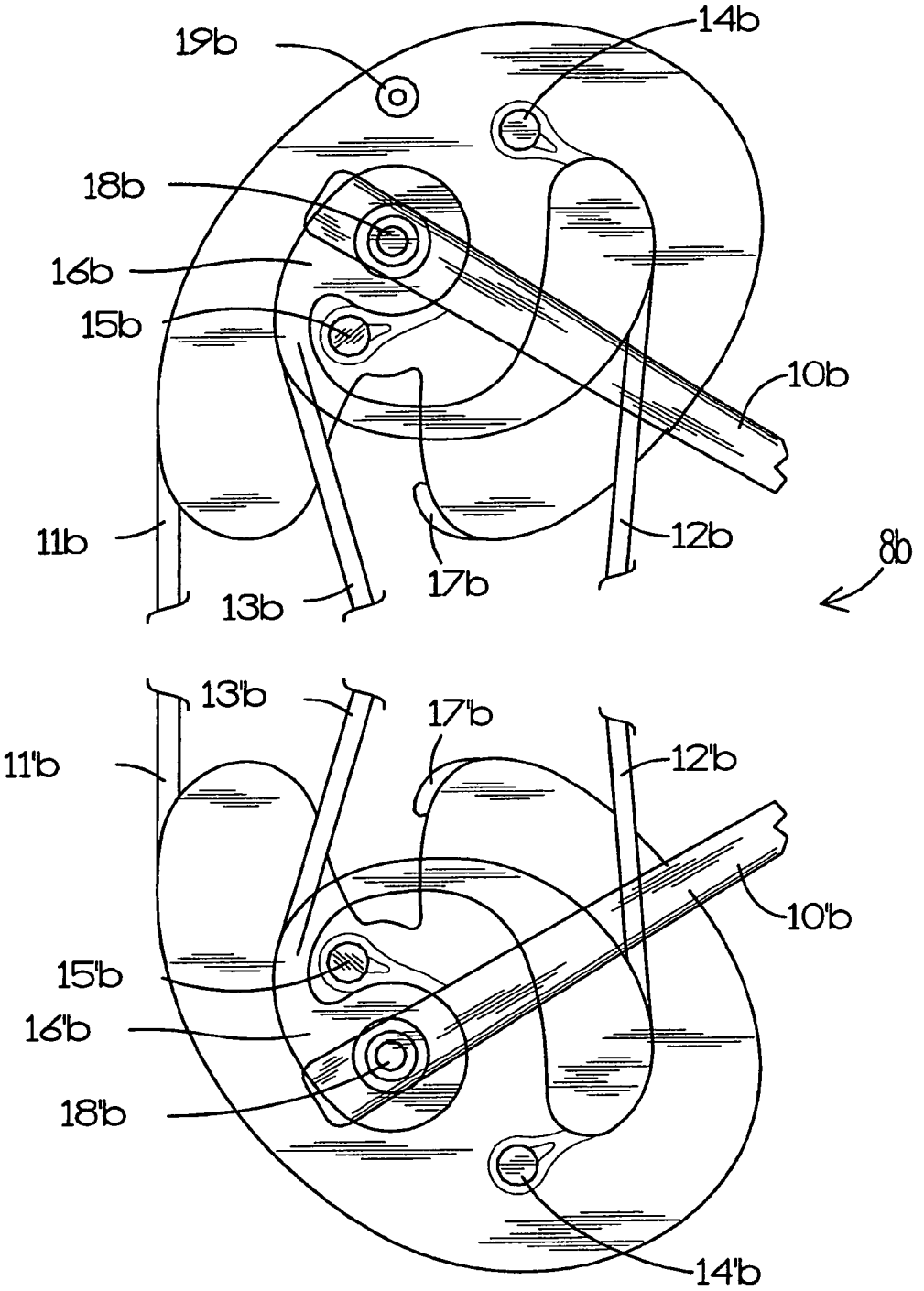
19b
14b
18b
16b
15b
10b
11b
12b
8b
13b
17b
13'b
17'b
11'b
12'b
10'b
15'b
16'b
18'b
14'b

Fig.4

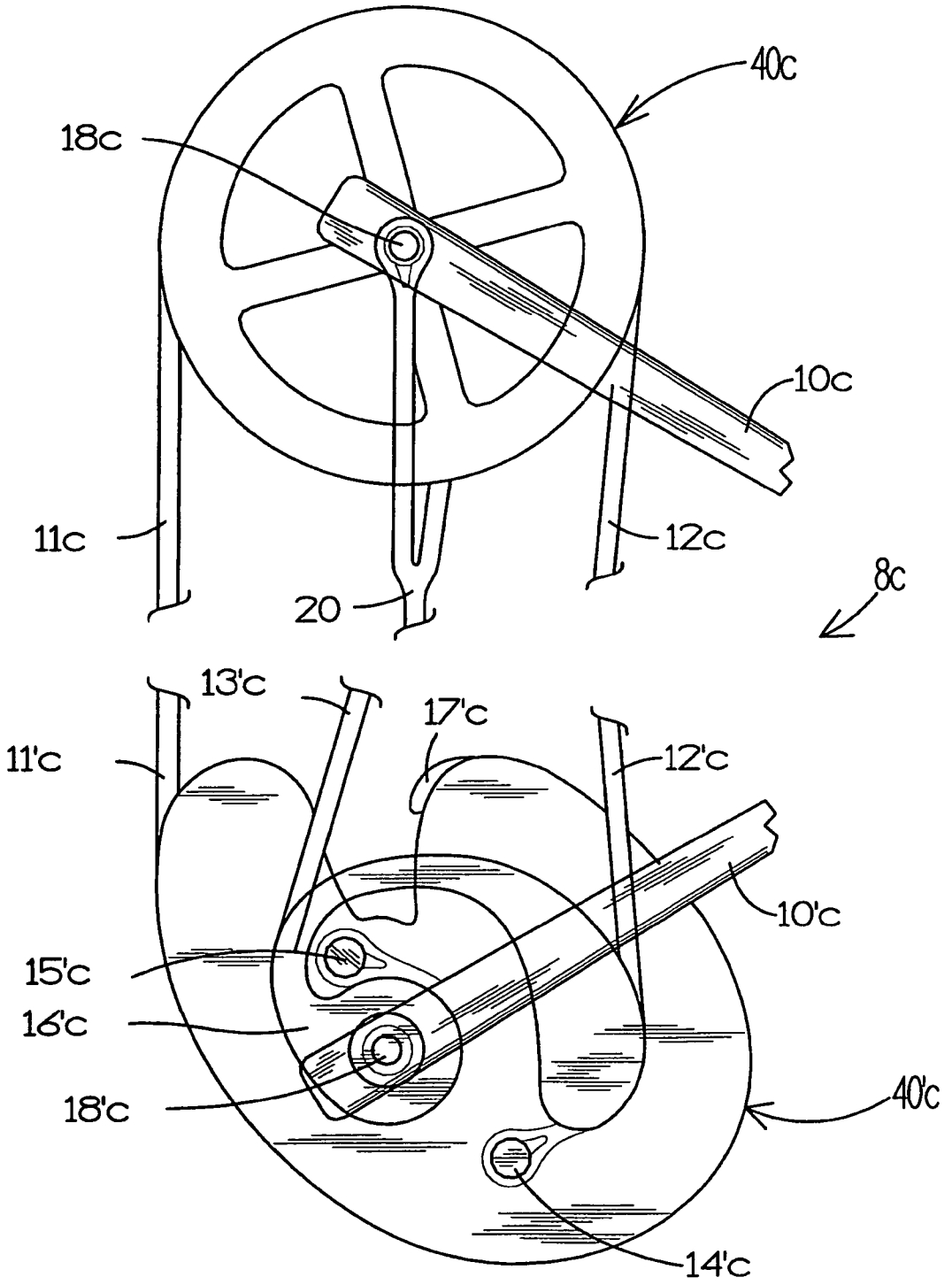

Fig.5

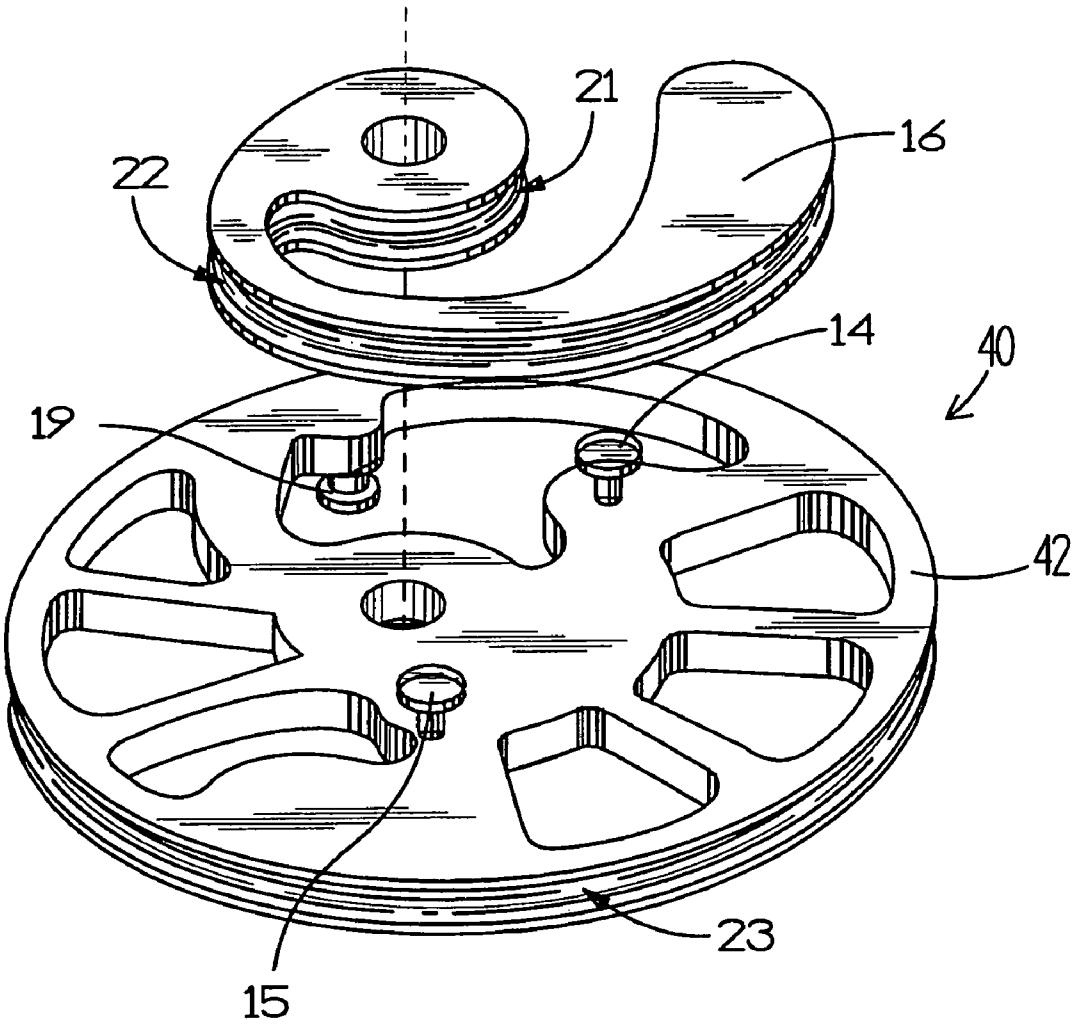

Fig.6

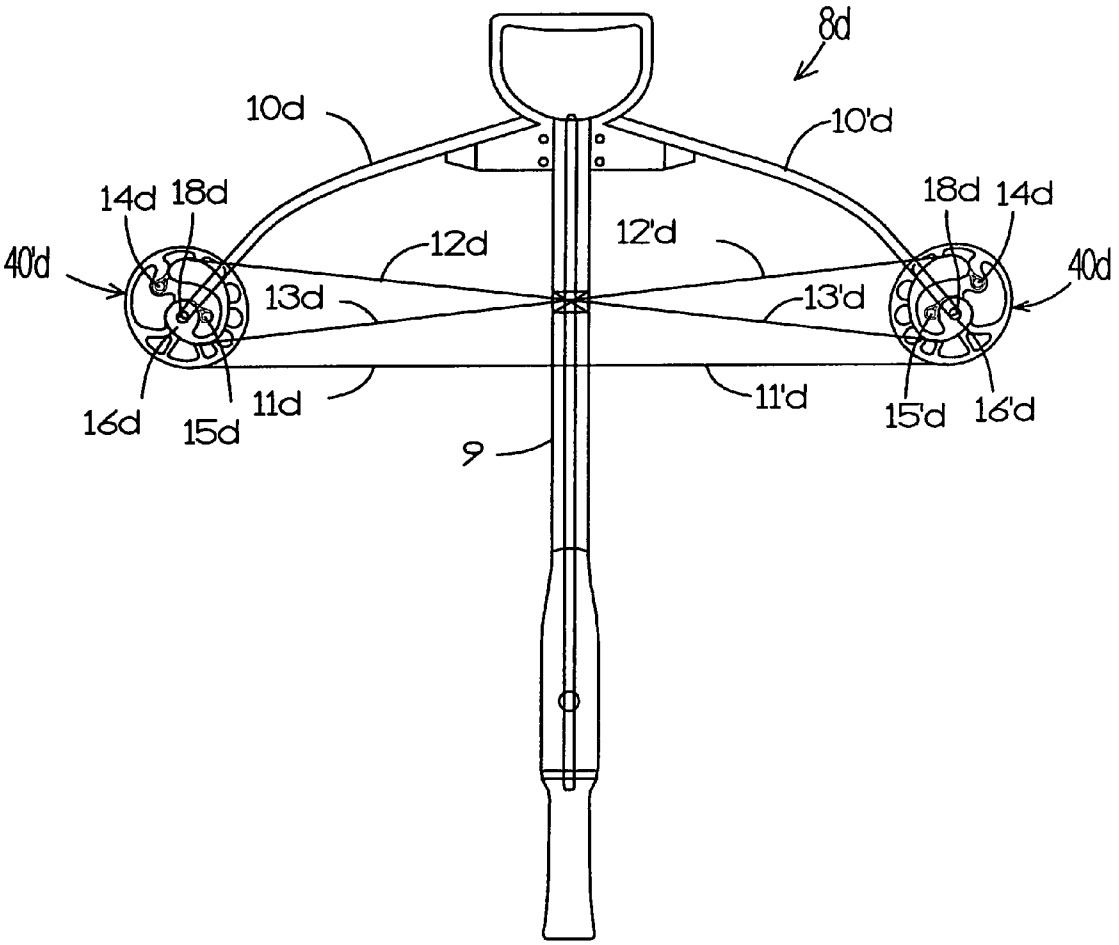
8d
10d
10'd
14d
18d
18d
14d
40'd
12d
12'd
40d
13d
13'd
16d
15d
11d
11'd
15'd
16'd
9

Fig.7

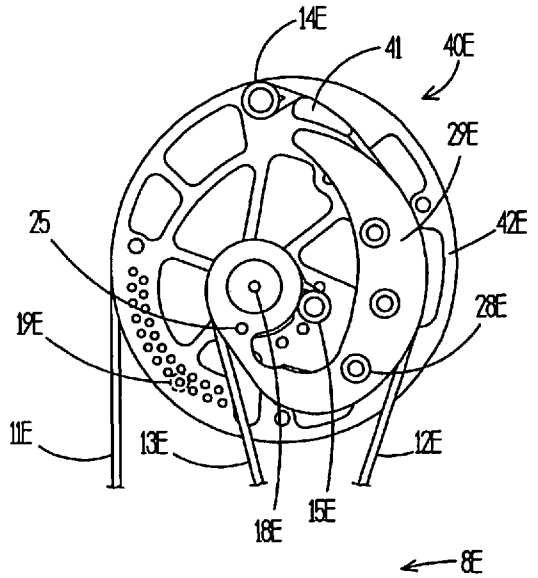

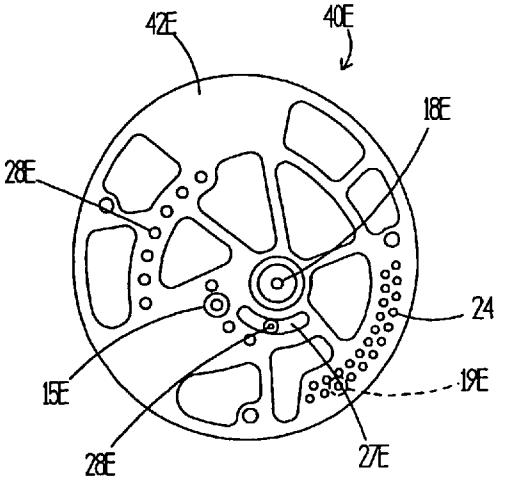

Fig.8A

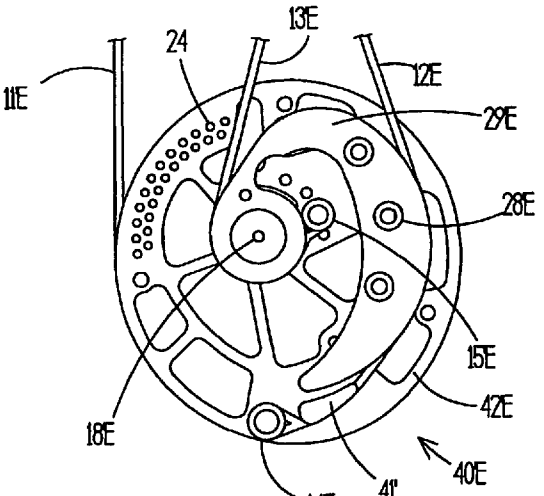

Fig.8

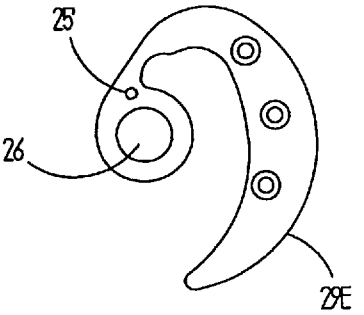

Fig.8B

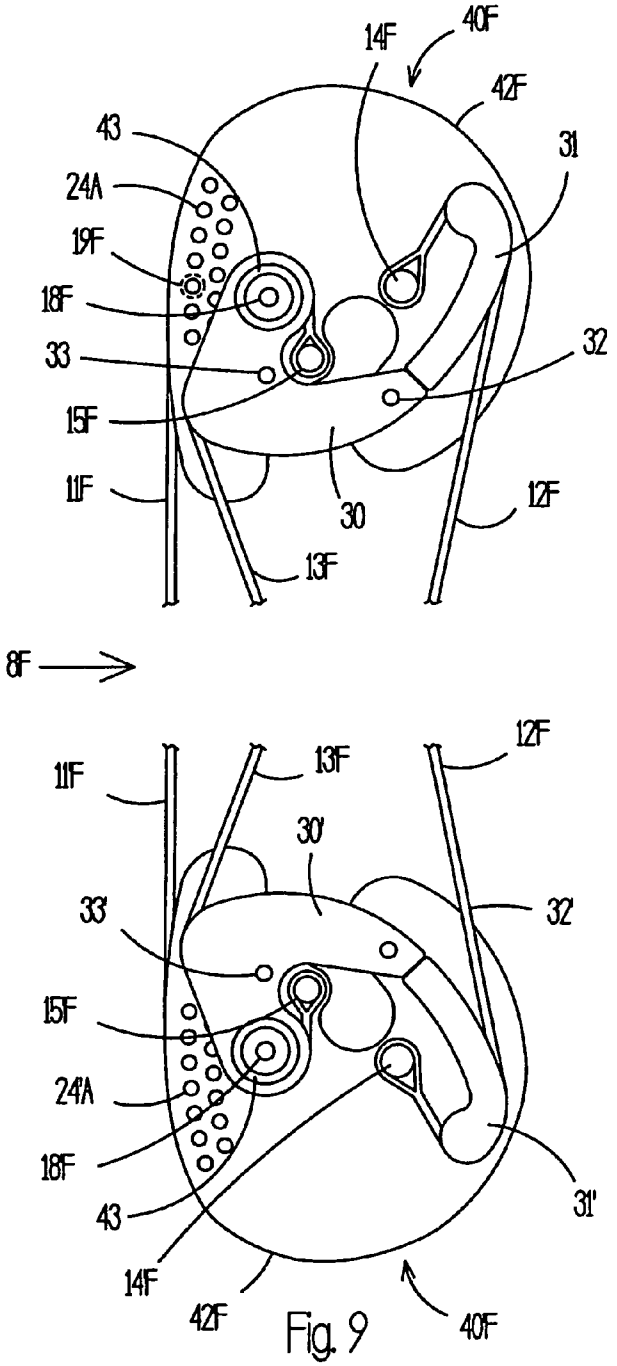
40F
14F
42F
43
31
24A
19F
18F
33
32
15F
11F
30
12F
13F
8F
11F
13F
12F
30'
33'
32'
15F
24'A
18F
43
31'
14F
42F
40F

Fig. 9

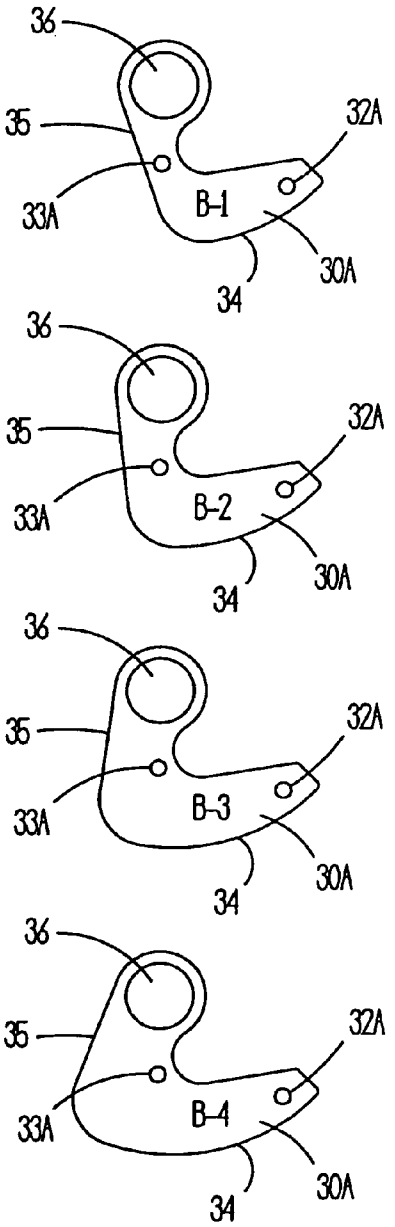
36
35
32A
33A
B-1
34
30A
36
35
32A
33A
B-2
34
30A
36
35
32A
33A
B-3
34
30A
36
35
32A
33A
B-4
34
30A

Fig. 9A

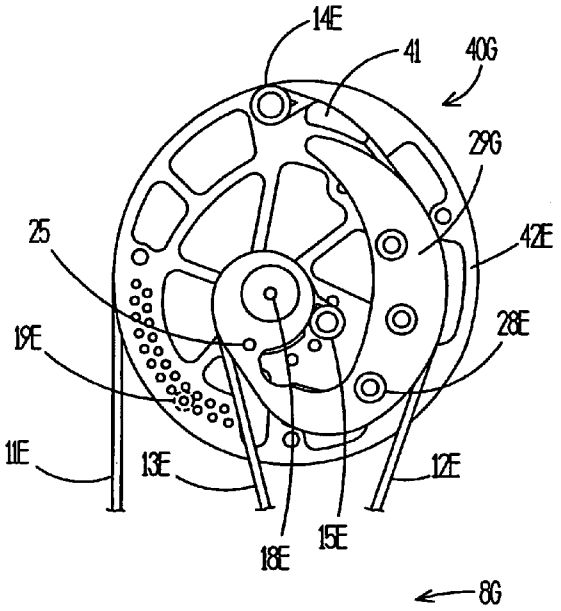

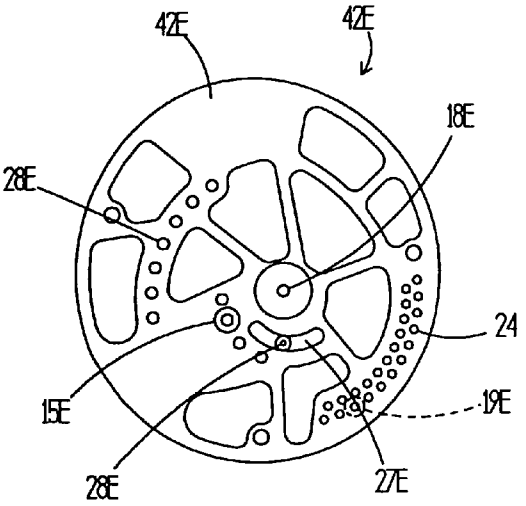

Fig.10A

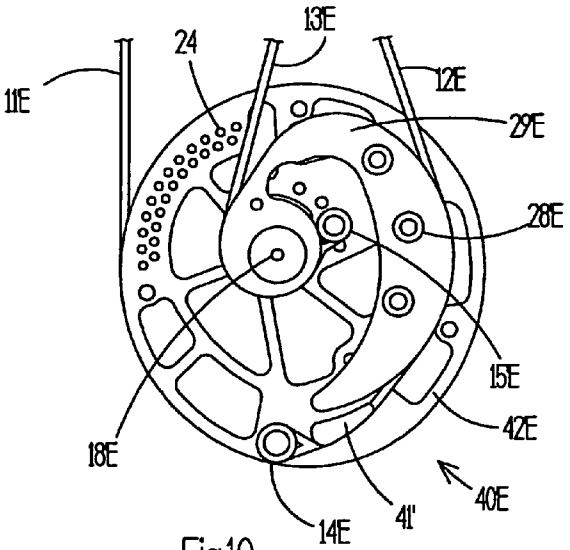

Fig.10

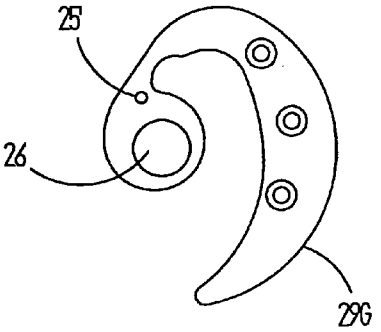

Fig.10B

COMPOUND ARCHERY BOW

This application claims priority from application Ser. No. 61/014,834 filed Dec. 19, 2007.

The present disclosure is directed to compound archery bows having pulleys at the ends of the bow limbs to control the force/draw characteristics of the bow, and more particularly to both single-cam bows having a power let-off cam mounted on the end of one of the bow limbs and dual-cam bows having power let-off cams mounted on the ends of both bow limbs.

BACKGROUND AND SUMMARY OF THE DISCLOSURE

Single-cam and dual-cam compound archery bows have a power cam mounted on one or both ends of the bow limbs to control the draw force on the bowstring and the bending of the limbs as the bowstring is drawn. In single-cam bows, there is a power cam on the end of one bow limb, and a wheel on the end of the other bow limb to facilitate control or time take-up of a power cable at the power cam and let-out of the bowstring and control cables at the power cam as the bow is drawn. In dual-cam bows, power cams are mounted on the ends of both limbs, with each including groove segments to control let-out of the bowstring cable at the opposing cam.

A general object of the present disclosure is to provide a compound archery bow that achieves enhanced power and arrow speed as compared with compound archery bows of the prior art and/or to reduce or eliminate timing issues between cams on dual cam bows.

The present disclosure embodies a number of aspects that can be implemented separately from or in combination with each other.

A compound archery bow, in accordance with one aspect of the present disclosure, includes a handle having projecting limbs, and first and second pulleys mounted on the limbs for rotation around respective axes. At least a first of the pulleys includes a flat base with a bowstring let-out groove on the base and a bowstring anchor adjacent to the bowstring let-out groove. A draw module is disposed on the base, a cable groove extends along the draw module, and first and second cable anchors are disposed on the base adjacent to respective ends of the cable groove. The cable groove on the draw module is continuous in a plane perpendicular to the axis of the first pulley. A bow cable arrangement includes a bowstring cable extending from the bowstring anchor on the first pulley around the bowstring let-out groove and then toward the second pulley. A first cable extends from the first anchor on the first pulley through a portion of the cable groove on the module and then toward the second pulley. A second cable extends from the second anchor toward the second pulley. Draw of the bowstring cable away from the bow handle lets out bowstring cable from the bowstring cable groove on the first pulley and rotates the first pulley around its axis, lets out the first cable from the groove on the module and takes up the second cable into the groove on the module including a portion of such groove previously occupied by the first cable.

BRIEF DESCRIPTION OF THE DRAWINGS

The disclosure, together with additional objects, features, advantages and aspects thereof, will best be understood from the following description, the appended claims and the accompanying drawings, in which:

FIG. **1** is an elevational view of a compound archery bow in accordance with an exemplary first embodiment of the present disclosure;

FIG. **1**A is a fragmentary view of the upper portion of the bow in FIG. **1** with the bowstring fully drawn;

FIG. **1**B is an elevational view of a modification to the embodiment of FIG. **1**;

FIG. **2** is a fragmentary elevational view on an enlarged scale of the pulleys in the bow of FIG. **1**;

FIG. **2**A is a sectional view taken substantially along the line **2**A-**2**A of FIG. **2**;

FIG. **3** is a fragmentary elevational view similar to those of FIG. **2** but illustrating a second embodiment of the disclosure;

FIG. **4** is a fragmentary elevational view similar to those of FIGS. **2** and **3** but illustrating another embodiment of the disclosure;

FIG. **5** is a fragmentary elevational view similar to those of FIGS. **2**, **3** and **4** but illustrating a further embodiment of the disclosure;

FIG. **6** is an exploded perspective view of the power cam in the embodiment of FIGS. **1**-**2**A;

FIG. **7** is a top plan view of a crossbow that embodies the principles of the present disclosure;

FIG. **8** is a fragmentary elevational view similar to those of FIGS. **2**, **3**, **4** and **5** but illustrating a further embodiment of the present disclosure;

FIG. **8**A is an elevational view of the back side of the top pulley in FIG. **8**;

FIG. **8**B is an elevational view of a replaceable draw module in the bow of FIG. **8**;

FIG. **9** is a fragmentary elevational view of a further embodiment of the present disclosure;

FIG. **9**A is elevational views of replaceable draw length modules for the embodiment of FIG. **9**;

FIG. **10** is a fragmentary elevational view of a bow in accordance with a further embodiment of the disclosure;

FIG. **10**A is an elevational view of the base in the upper pulley of FIG. **10**; and

FIG. **10**B is an elevational view of the draw length module in the upper pulley of FIG. **10**.

DETAILED DESCRIPTION OF PREFERRED EMBODIMENTS

FIGS. **1**, **2**, **2**A and **6** illustrate a dual-cam compound archery bow **8** in accordance with one exemplary embodiment of the present disclosure as comprising a handle **9** of aluminum or other relatively rigid construction having spaced risers with bow-mounting surfaces at each end. A pair of flexible resilient limbs **10**,**10'** of fiber-reinforced resin or other suitable resilient construction are mounted on the respective handle risers and project away from handle **9**. An upper pulley **40** is mounted on limb **10** for rotation around an axle **18**, and a lower pulley **40'** is mounted on an end of limb **10'** for rotation around an axle **18'**. Bow **8** in FIGS. **1**-**2**A and **6** is a dual-cam bow in which pulleys **40**,**40'** are similar in functions and preferably are near mirror images of each other. (Upper pulley **40** can be slightly larger than lower pulley **40'** to compensate for the arrow rest not being at the true center of the bow. Some pulleys also can be made non-identical in areas that are non-functional to create a desired difference in appearance.)

Pulley **40** includes a flat base **42** having a bowstring let-out groove **23** extending around at least a portion of the periphery of the base in a plane perpendicular to the axis of axle **18**. A bowstring cable end **11** extends from a bowstring anchor **17** on base **42** around groove **23** and toward pulley **40'** at the opposing end of the bow, at which bowstring cable end **1'**

extends through groove **23** of base **42'** to an anchor **17'**. A draw module **16** is disposed on base **42**. Draw module **16** in this embodiment preferably is permanently mounted on base **42**, such as by being formed in one piece with the base. Draw module **16** has a groove **22** that extends around the module and around the axis of rotation of pulley **40**. Groove **22** is continuous in a plane perpendicular to the axis of axle **18**. Pulley **40'** is a mirror image or near-mirror image of pulley **40**, and corresponding elements of pulley **40'** are indicated with the same reference numeral and a prime symbol.

A first cable end **13** extends from an anchor **15** on base **42** around a portion of groove **22** on module **16** and then toward pulley **40'**, at which the opposing end **12'** is secured to an anchor **14'**, preferably after passing around a portion of groove **22** on module **16'**. A second cable end **12** extends from an anchor **14** on pulley **40**, preferably through at least a portion of groove **22** on module **16**, to pulley **40'**, at which the opposing cable end **13'** extends through a portion of groove **22** on module **16'** to an anchor **15'**. Thus, as bowstring cable **11**,**11'** is pulled away from handle **9** (to the left in FIGS. **1** and **2**), the bowstring cable unwraps from bowstring let-out groove **23** on base **42** of pulley **40** and base **42'** of pulley **40'**. Pulleys **40**,**40'** thereby are rotated in opposite directions by draw of bowstring cable **11**,**11'**, letting out portions of cable ends **13**,**13'** and taking up portions of cable ends **12**,**12'**. The portions of cable ends **12**,**12'** taken up into module grooves **22** occupy at least some portion of the module grooves previously occupied by let-out cable ends **13**,**13'**. That is, cable grooves **22** on modules **16**,**16'** function both as let-out grooves for cable ends **13**,**13'** and as take-up grooves for cable ends **12**,**12'** Thus, with the bowstring fully drawn in FIG. **1**A in this example, cable end **13** is substantially or entirely unwrapped from module **16** and cable end **12** is wrapped substantially entirely around the module.

The opposing pulleys thus are slaved together and eliminate any cam-to-cam timing issues. Cable ends **13**,**13'** are let out at a significantly lower rate than take-up of cable ends **12**,**12'**, which results in maximum limb compression of the opposing bow limbs. This helps achieve a high level of stored bow energy, dynamic efficiency and kinetic energy, achieving improved arrow speed. Stops **19**, **19'** on pulleys **40**, **40'** abut the bow limbs to limit bow draw.

FIGS. **1**A, **3**-**5** and **7**-**10**B illustrate modified embodiments of the disclosure. In each embodiment, elements that correspond to elements previously discussed in connection with FIGS. **1**-**2**A and **6** are identified by correspondingly identical reference numerals with a letter suffix.

In bow **8***a* of FIG. **3**, the bow cable having lower end **12'***a* has its upper end **20** anchored at axle **18***a*. Thus, in this embodiment, the upper end **20** is not let out from the groove of module **16***a*. However, lower pulley **40'***a* operates as preciously described. Bowstring cable ends **11***a*, **11'***a* are secured to pulleys **40***a*, **40'***a* at anchors **17***a*, **17'***a*.

Bow **8***b* of FIG. **4** is similar to bow **8** in FIG. **2** except for a different shape to the bowstring groove and different placement of bowstring anchors **17***b*, **17'***b*.

FIG. **5** illustrates an exemplary single cam bow **8***c* in accordance with the present disclosure, in which the upper pulley **40***c* is a wheel having a peripheral groove concentric with the axis of axle **18***c*. Lower pulley **40'***c* is the same as pulley **40'***a* in FIG. **3**. Thus, in the embodiment of FIG. **5**, the bowstring cable extends from end **11'***c* at pulley **40'***c* to end **11***c* at pulley **40***c*, around pulley **40***c* to cable end **12***c*, then to cable end **13'***c* around module **16'***c* to anchor **15'***c*. Cable end **12'***c* extends from anchor **14'***c*, preferably around a portion of the module groove, to cable end **20** anchored at axle **18***c*.

FIG. **7** illustrates a crossbow **8***d* that employs pulleys **40***d*, **40'***d* similar to those discussed in detail above in connection with the embodiment of FIGS. **1**-**2**A and **6**.

FIGS. **8**-**8**B illustrate a dual-cam bow **8**E, in which the draw modules **29**E,**29'**E of pulleys **40**E,**40'**E have adjustably positionable draw length modules **29**E,**29'**E rather than fixed-position draw length modules as in the prior embodiments. Bases **42**E, **42'**E of pulleys **40**E, **40'**E have threaded openings that receive screws **28**E, **28'**E for anchoring modules **29**E, **29'**E. Each module **29**E, **29'**E has an opening **26** that can be either concentric with or eccentric to the periphery of the module, and that encircles the associated axle **18**E or **18'**E so that the module can be adjustably pivoted around the axle to adjust bow draw length. A piece **41**, **41'** is affixed to each pulley base **42**E, **42'**E to guide cable ends **12**E, **12'**E from modules **29**E, **29'**E to anchors **14**E, **14'**E. Threaded openings **24** on bases **42**E, **42'**E provide for adjustable positioning of draw stops **19**E.

FIG. **9** illustrates a dual-cam bow **8**F. Pulleys **40**F, **40'**F have replaceable non-adjustable draw length modules **30**, **30'**. Each module has an opening **36** that embraces the associated axle **18**F, **18'**F or axle boss **43**, **43'**. Modules **30**, **30'** are secured in position by screws **32**, **33** and **32'**, **33'** threaded into openings **32**A, **33**A (FIG. **9**A). Adjacent to module **30**, **30'** are sections **31**, **31** respectively affixed to bases **42**F, **42'**F of pulleys **40**F, **40'**F. Sections **31**, **31'** have cable grooves that form respective extensions of the module cable grooves **34**. Thus, in this embodiment, the let-out/take-up groove formed in each module **30**, **31'** is continued onto associated fixed section **31**, **31'**. In this embodiment, cable ends **12**F,**12'**F initially are taken up into the grooves on sections **31**,**31'** and then into the grooves on replaceable modules **30**,**30'**. FIG. **9**A illustrates a number of replaceable modules **30**,**30'** for different bow draw lengths.

FIG. **1**B illustrates a bow **8***g* in which lower pulley **40'***g* is the same as pulley **40'** in FIGS. **1**-**2**, but upper pulley **40***g* is modified. Pulley **40***g* in this embodiment preferably includes a module **16***g* with a groove for taking up cable end **12**, and a pulley section **45** with a groove for letting out cable **13**. Pulley **40***g* and pulley section **45** preferably are as disclosed in U.S. Pat. No. 6,996,970.

FIGS. **10**-**10**B illustrate a bow **8**G that is very similar to the bow **8**E of FIGS. **8**-**8**B except that the opening **26**G in the draw length module **29**G is eccentric to the periphery of the module rather than concentric as in FIGS. **8**-**8**B.

Adjustment of the bow draw lengths in the embodiments of FIGS. **1**-**7** and **9** requires replacement of the draw length modules, which in turn requires disassembly of each pulley from the bow because the modules are mounted on the pulley axles. In the embodiments of FIGS. **8** and **10**, the draw length modules are adjustably pivotal around the axles so that draw lengths can be adjusted within a limited range without disassembly of the pulleys.

There thus has been disclosed a compound archery bow that fully satisfies all of the objects and aims previously set forth. The bow has been disclosed in conjunction with a number of exemplary embodiments. Modifications and variations readily will suggest themselves to persons of ordinary skill in the art in view of the foregoing description. The disclosure is intended to embrace all such modifications and variations as fall within the spirit and broad scope of the appended claims.

The invention claimed is:

1. A compound archery bow that includes:

a bow handle having projecting limbs,

a first pulley mounted on a first of said limbs for rotation around a first axis,

a second pulley mounted on a second of said limbs for rotation around a second axis,

at least said first pulley including a flat base, a bowstring let-out groove on said base, a bowstring anchor adjacent to said bowstring let-out groove, a draw module on said base, a cable groove on said draw module that is continuous in a plane perpendicular to said first axis, a first cable anchor adjacent to one end of said cable groove and a second cable anchor adjacent to a second end of said cable groove, and

bow cable means including a bowstring cable extending from said bowstring anchor through said bowstring let-out groove on said first pulley and then toward said second pulley, a first cable extending from said first anchor through a portion of said cable groove on said module and then toward said second pulley, and a second cable extending from said second anchor toward said second pulley,

wherein draw of said bowstring cable away from said handle lets out bowstring cable from said bowstring let-out groove and rotates said first pulley around said first axis, lets out said first cable from said groove on said module and takes up said second cable into at least a portion of said groove on said module previously occupied by said first cable, and

wherein said bow is a dual-cam bow with said first and second pulleys being similar in function and near mirror images of each other.

2. The bow set forth in claim **1** wherein said second cable extends from said second anchor through a portion of said cable groove on said module and then toward said second pulley.

3. The bow set forth in claim **1** wherein said draw module is removably mounted on said base.

4. The bow set forth in claim **3** wherein said first pulley has a fixed portion mounted on said base in alignment with said module, said groove on said module extending onto said fixed portion and said second anchor being disposed adjacent to said fixed portion.

5. The bow set forth in claim **1** wherein said draw module is adjustably mounted on said base.

6. The bow set forth in claim **1** wherein said bow is a crossbow.

7. A compound archery bow that includes:

a bow handle having projecting limbs,

a first pulley mounted on a first of said limbs for rotation around a first axis, said first pulley including a bowstring let-out groove, a bowstring anchor adjacent to said bowstring let-out groove, a cable groove in a plane perpendicular to said first axis, a first cable anchor adjacent to one end of said cable groove and a second cable anchor adjacent to a second end of said cable groove,

a second pulley mounted on a second of said limbs for rotation around a second axis, said second pulley including a bowstring let-out groove, a bowstring anchor adjacent to said bowstring let-out groove, a cable groove in a plane perpendicular to said second axis, a first cable anchor adjacent to one end of said cable groove and a second cable anchor adjacent to a second end of said cable groove, and

bow cable means including a bowstring cable extending from said bowstring anchor through said bowstring let-out groove on said first pulley and then through said bowstring let-out groove to said bowstring anchor on said second pulley, a first cable extending from said first anchor through a portion of said cable groove on said first pulley, then to said second pulley and then through a portion of said cable groove on said second pulley to said second anchor on said second pulley, and a second cable extending from said first anchor on said second pulley through a portion of said cable groove on said second pulley, then to said first pulley and then through a portion of said cable groove on said first pulley to said second anchor on said first pulley,

wherein draw of said bowstring cable away from said handle lets out bowstring cable from said bowstring let-out grooves and rotates said first and second pulleys around said first and second axes, lets out said first cable from said cable groove on said first pulley and takes up said first cable into a portion of said cable groove on said second pulley, and lets out said second cable from said cable groove on said second pulley and takes up said second cable into a portion of said cable groove on said first pulley.

8. The bow set forth in claim **7** wherein said bow is a crossbow.

9. The bow set forth in claim **8** wherein said draw module is angularly adjustable around said first axis of said first pulley.

10. The bow set forth in claim **9** wherein said bow has an axle on which said first pulley is mounted for rotation around said first axis, and wherein said draw module has an opening that encircles said axle.

11. The bow set forth in claim **7** wherein said bow is a dual-cam bow with said first and second pulleys being similar in function and near mirror images of each other.

12. The bow set forth in claim **7** wherein said bow is a single-cam bow, said second pulley comprising a wheel with a continuous peripheral groove.

13. A compound archery bow that includes:

a bow handle having projecting limbs,

a first pulley mounted on a first of said limbs for rotation around a first axis,

a second pulley mounted on a second of said limbs for rotation around a second axis,

at least said first pulley including a flat base, a bowstring let-out groove on said base, a bowstring anchor adjacent to said bowstring let-out groove, a draw module on said base, a cable groove on said draw module that is continuous in a plane perpendicular to said first axis, a first cable anchor adjacent to one end of said cable groove and a second cable anchor adjacent to a second end of said cable groove, and

bow cable means including a bowstring cable extending from said bowstring anchor through said bowstring let-out groove on said first pulley and then toward said second pulley, a first cable extending from said first anchor through a portion of said cable groove on said module and then toward said second pulley, and a second cable extending from said second anchor toward said second pulley,

wherein draw of said bowstring cable away from said handle lets out bowstring cable from said bowstring let-out groove and rotates said first pulley around said first axis, lets out said first cable from said groove on said module and takes up said second cable into at least a portion of said groove on said module previously occupied by said first cable, and

wherein said draw module is removably mounted on said base, and said first pulley has a fixed portion mounted on said base in alignment with said module, said groove on said module extending onto said fixed portion and said second anchor being disposed adjacent to said fixed portion.

14. A compound archery bow that includes:

a bow handle having projecting limbs,

a first pulley mounted on a first of said limbs for rotation around a first axis,

a second pulley mounted on a second of said limbs for rotation around a second axis,

at least said first pulley including a flat base, a bowstring let-out groove on said base, a bowstring anchor adjacent to said bowstring let-out groove, a draw module adjustably mounted on said base, a cable groove on said draw module that is continuous in a plane perpendicular to said first axis, a first cable anchor adjacent to one end of said cable groove and a second cable anchor adjacent to a second end of said cable groove, and

bow cable means including a bowstring cable extending from said bowstring anchor through said bowstring let-out groove on said first pulley and then toward said second pulley, a first cable extending from said first anchor through a portion of said cable groove on said module and then toward said second pulley, and a second cable extending from said second anchor toward said second pulley,

wherein draw of said bowstring cable away from said handle lets out bowstring cable from said bowstring let-out groove and rotates said first pulley around said first axis, lets out said first cable from said groove on said module and takes up said second cable into at least a portion of said groove on said module previously occupied by said first cable.

* * * * *