PATENT

IN THE UNITED STATES PATENT AND TRADEMARK OFFICE

In re Application of:	**Mathew A. McPherson**
Application No.:	**Not Assigned**
Filed:	**Not Assigned**
For:	**Archery Bow Cam**
Group Art Unit:	**Not Assigned**

Mail Stop _____
Commissioner for Patents
P.O. Box 1450
Alexandria, VA 22313-1450

Docket No.: M55.2P-14675-US02

TRANSMITTAL LETTER

1. In regard to the above-identified application, in addition to this **1** page transmittal letter, we are submitting the attached: **14 page Specification including: 9 page description, 4 page claims, 1 page abstract; 7 Sheets of Drawings; 4 page Application Data Sheet; 2 page Nonpublication Request; and 1 page Constructive Petition for an Extension of Time.**

2. With respect to fees, applicant believes the fees required herein, if any, are being paid electronically.

3. **CONDITIONAL PETITION FOR EXTENSION OF TIME**
This conditional petition is being filed along with the papers identified in Item 1 above and provides for the possibility that Applicant has inadvertently overlooked the need for a petition and fee for extension of time or for a petition and fee for any other matter petitionable to the Commissioner as required. If any extension of time for the accompanying response is required or if a petition for any other matter is required, by petitioner, Applicant requests that this be considered a petition therefor.

4. **Notwithstanding paragraph 2 above, if any additional fees associated with this communication are required and have not otherwise been paid, including any fee associated with the Conditional Petition for Extension of Time, or any request in the accompanying papers for action which requires a fee as a petition to the Commissioner, please charge the additional fees to Deposit Account No. 22-0350. Please charge any additional fees associated with this communication to the Deposit Account No. 22-0350.**

5. **Certification:** I hereby certify that this Transmittal Letter and the paper(s) as described herein are being transmitted electronically to the USPTO on September 30, 2010.

Respectfully submitted,
VIDAS, ARRETT & STEINKRAUS

Date: September 30, 2010

By: /Jeremy G Laabs/
Jeremy G. Laabs
Registration No.: 53170

6640 Shady Oak Rd., Suite 400
Eden Prairie, MN 55344-7834
Telephone: (952) 563-3000
Facsimile: (952) 563-3001
f:\wpwork\jgl\14675us02_tra_20100929.doc

PATENT

IN THE UNITED STATES PATENT AND TRADEMARK OFFICE

In re Application of:	**Mathew A. McPherson**
Application No.:	**12/895610**
Filed:	**September 30, 2010**
For:	**Archery Bow Cam**
Group Art Unit:	**3711**

Commissioner for Patents
P.O. Box 1450
Alexandria, VA 22313-1450

Docket No.: M55.2P-14675-US02

TRANSMITTAL LETTER

1. In regard to the above-identified application, in addition to this **1** page transmittal letter, we are submitting the attached:
   1 page Part B – Fee(s) Transmittal.

2. With respect to fees, applicant believes the fees required herein, if any, are being paid electronically.

3. **CONDITIONAL PETITION FOR EXTENSION OF TIME**
   This conditional petition is being filed along with the papers identified in Item 1 above and provides for the possibility that Applicant has inadvertently overlooked the need for a petition and fee for extension of time or for a petition and fee for any other matter petitionable to the Commissioner as required. If any extension of time for the accompanying response is required or if a petition for any other matter is required, by petitioner, Applicant requests that this be considered a petition therefor.

4. **Notwithstanding paragraph 2 above, if any additional fees associated with this communication are required and have not otherwise been paid, including any fee associated with the Conditional Petition for Extension of Time, or any request in the accompanying papers for action which requires a fee as a petition to the Commissioner, please charge the additional fees to Deposit Account No. 22-0350. Please charge any additional fees associated with this communication to the Deposit Account No. 22-0350.**

5. **Certification:** I hereby certify that this Transmittal Letter and the paper(s) as described herein are being transmitted electronically to the USPTO on February 5, 2014.

Respectfully submitted,

VIDAS, ARRETT & STEINKRAUS

Date: February 5, 2014

By: /Jeremy G Laabs/
Jeremy G. Laabs
Registration No.: 53170

6640 Shady Oak Rd., Suite 400
Eden Prairie, MN 55344-7834
Telephone: (952) 563-3000
Facsimile: (952) 563-3001
v:\wpwork\jgl\14675us02_tra_20140205.doc

PATENT

IN THE UNITED STATES PATENT AND TRADEMARK OFFICE

In re Application of:	**Mathew A. McPherson**
Application No.:	**12/895610**
Filed:	**September 30, 2010**
For:	**Archery Bow Cam**
Group Art Unit:	**3711**

Commissioner for Patents
P.O. Box 1450
Alexandria, VA 22313-1450

Docket No.: M55.2P-14675-US02

TRANSMITTAL OF FORMAL DRAWINGS

Attached please find the formal drawings for this application with each sheet indicating the application number and title on the top of the drawings - Number of Sheets: **7**.

Respectfully submitted,

VIDAS, ARRETT & STEINKRAUS

Date: January 10, 2014

By: /Jeremy G Laabs/
Jeremy G. Laabs
Registration No.: 53170

6640 Shady Oak Rd., Suite 400
Eden Prairie, MN 55344-7834
Telephone: (952) 563-3000
Facsimile: (952) 563-3001

v:\wpwork\jgl\14675us02_dwg_20140107.doc

PATENT

IN THE UNITED STATES PATENT AND TRADEMARK OFFICE

In re Application of:	**Mathew A. McPherson**
Application No.:	**12/895610**
Filed:	**September 30, 2010**
For:	**Archery Bow Cam**
Group Art Unit:	**3711**

Commissioner for Patents
P.O. Box 1450
Alexandria, VA 22313-1450

Docket No.: M55.2P-14675-US02

TRANSMITTAL LETTER

1. In regard to the above-identified application, in addition to this **1** page transmittal letter, we are submitting the attached:
12 page Amendment and 1 Replacement Drawing Sheet.

2. With respect to fees, applicant believes the fees required herein, if any, are being paid electronically.

3. **CONDITIONAL PETITION FOR EXTENSION OF TIME**
This conditional petition is being filed along with the papers identified in Item 1 above and provides for the possibility that Applicant has inadvertently overlooked the need for a petition and fee for extension of time or for a petition and fee for any other matter petitionable to the Commissioner as required. If any extension of time for the accompanying response is required or if a petition for any other matter is required, by petitioner, Applicant requests that this be considered a petition therefor.

4. **Notwithstanding paragraph 2 above, if any additional fees associated with this communication are required and have not otherwise been paid, including any fee associated with the Conditional Petition for Extension of Time, or any request in the accompanying papers for action which requires a fee as a petition to the Commissioner, please charge the additional fees to Deposit Account No. 22-0350. Please charge any additional fees associated with this communication to the Deposit Account No. 22-0350.**

5. **Certification:** I hereby certify that this Transmittal Letter and the paper(s) as described herein are being transmitted electronically to the USPTO on December 20, 2013.

Respectfully submitted,

VIDAS, ARRETT & STEINKRAUS

Date: December 20, 2013

By: /Jeremy G Laabs/
Jeremy G. Laabs
Registration No.: 53170

6640 Shady Oak Rd., Suite 400
Eden Prairie, MN 55344-7834
Telephone: (952) 563-3000
Facsimile: (952) 563-3001
v:\wpwork\jgl\14675us02_tra_20131220.doc

PATENT

IN THE UNITED STATES PATENT AND TRADEMARK OFFICE

In re Application of:	**Mathew A. McPherson**
Application No.:	**12/895610**
Filed:	**September 30, 2010**
For:	**Archery Bow Cam**
Group Art Unit:	**3711**

Commissioner for Patents
P.O. Box 1450
Alexandria, VA 22313-1450

Docket No.: M55.2P-14675-US02

TRANSMITTAL LETTER

1. In regard to the above-identified application, in addition to this **1** page transmittal letter, we are submitting the attached:
6 page Amendment filed with RCE; 3 page Request for Continued Examination.

2. With respect to fees, applicant believes the fees required herein, if any, are being paid electronically.

3. **CONDITIONAL PETITION FOR EXTENSION OF TIME**
This conditional petition is being filed along with the papers identified in Item 1 above and provides for the possibility that Applicant has inadvertently overlooked the need for a petition and fee for extension of time or for a petition and fee for any other matter petitionable to the Commissioner as required. If any extension of time for the accompanying response is required or if a petition for any other matter is required, by petitioner, Applicant requests that this be considered a petition therefor.

4. **Notwithstanding paragraph 2 above, if any additional fees associated with this communication are required and have not otherwise been paid, including any fee associated with the Conditional Petition for Extension of Time, or any request in the accompanying papers for action which requires a fee as a petition to the Commissioner, please charge the additional fees to Deposit Account No. 22-0350. Please charge any additional fees associated with this communication to the Deposit Account No. 22-0350.**

5. **Certification:** I hereby certify that this Transmittal Letter and the paper(s) as described herein are being transmitted electronically to the USPTO on July 1, 2013.

Respectfully submitted,

VIDAS, ARRETT & STEINKRAUS

Date: July 1, 2013

By: /Jeremy G Laabs/
Jeremy G. Laabs
Registration No.: 53170

6640 Shady Oak Rd., Suite 400
Eden Prairie, MN 55344-7834
Telephone: (952) 563-3000
Facsimile: (952) 563-3001
v:\wpwork\jgl\14675us02_tra_20130628.doc

PATENT

IN THE UNITED STATES PATENT AND TRADEMARK OFFICE

In re Application of:	**Mathew A. McPherson**
Application No.:	**12/895610**
Filed:	**September 30, 2010**
For:	**Archery Bow Cam**
Group Art Unit:	**3711**

Commissioner for Patents
P.O. Box 1450
Alexandria, VA 22313-1450

Docket No.: M55.2P-14675-US02

TRANSMITTAL LETTER

1. In regard to the above-identified application, in addition to this **1** page transmittal letter, we are submitting the attached:
7 page Amendment After Final.

2. With respect to fees, applicant believes the fees required herein, if any, are being paid electronically.

3. **CONDITIONAL PETITION FOR EXTENSION OF TIME**
This conditional petition is being filed along with the papers identified in Item 1 above and provides for the possibility that Applicant has inadvertently overlooked the need for a petition and fee for extension of time or for a petition and fee for any other matter petitionable to the Commissioner as required. If any extension of time for the accompanying response is required or if a petition for any other matter is required, by petitioner, Applicant requests that this be considered a petition therefor.

4. **Notwithstanding paragraph 2 above, if any additional fees associated with this communication are required and have not otherwise been paid, including any fee associated with the Conditional Petition for Extension of Time, or any request in the accompanying papers for action which requires a fee as a petition to the Commissioner, please charge the additional fees to Deposit Account No. 22-0350. Please charge any additional fees associated with this communication to the Deposit Account No. 22-0350.**

5. **Certification:** I hereby certify that this Transmittal Letter and the paper(s) as described herein are being transmitted electronically to the USPTO on May 29, 2013.

Respectfully submitted,

VIDAS, ARRETT & STEINKRAUS

Date: May 29, 2013

By: /Jeremy G Laabs/
Jeremy G. Laabs
Registration No.: 53170

6640 Shady Oak Rd., Suite 400
Eden Prairie, MN 55344-7834
Telephone: (952) 563-3000
Facsimile: (952) 563-3001
v:\wpwork\jgl\14675us02_tra_20130529.doc

PATENT

IN THE UNITED STATES PATENT AND TRADEMARK OFFICE

In re Application of:	**Mathew A. McPherson**
Application No.:	**12/895610**
Filed:	**September 30, 2010**
For:	**Archery Bow Cam**
Group Art Unit:	**3711**

Commissioner for Patents
P.O. Box 1450
Alexandria, VA 22313-1450

Docket No.: M55.2P-14675-US02

TRANSMITTAL LETTER

1. In regard to the above-identified application, in addition to this **1** page transmittal letter, we are submitting the attached:
10 page Amendment and 1 page Petition for one-month extension of time.

2. With respect to fees, applicant believes the fees required herein, if any, are being paid electronically.

3. **CONDITIONAL PETITION FOR EXTENSION OF TIME**
This conditional petition is being filed along with the papers identified in Item 1 above and provides for the possibility that Applicant has inadvertently overlooked the need for a petition and fee for extension of time or for a petition and fee for any other matter petitionable to the Commissioner as required. If any extension of time for the accompanying response is required or if a petition for any other matter is required, by petitioner, Applicant requests that this be considered a petition therefor.

4. **Notwithstanding paragraph 2 above, if any additional fees associated with this communication are required and have not otherwise been paid, including any fee associated with the Conditional Petition for Extension of Time, or any request in the accompanying papers for action which requires a fee as a petition to the Commissioner, please charge the additional fees to Deposit Account No. 22-0350. Please charge any additional fees associated with this communication to the Deposit Account No. 22-0350.**

5. **Certification:** I hereby certify that this Transmittal Letter and the paper(s) as described herein are being transmitted electronically to the USPTO on March 1, 2013.

Respectfully submitted,

VIDAS, ARRETT & STEINKRAUS

Date: March 1, 2013

By: /Jeremy G Laabs/
Jeremy G. Laabs
Registration No.: 53170

6640 Shady Oak Rd., Suite 400
Eden Prairie, MN 55344-7834
Telephone: (952) 563-3000
Facsimile: (952) 563-3001
v:\wpwork\jgl\14675us02_tra_20130204.doc

INFORMATION DISCLOSURE STATEMENT BY APPLICANT (Not for submission under 37 CFR 1.99)	Application Number	12895610
	Filing Date	2010-09-30
	First Named Inventor	Mathew A. McPherson
	Art Unit	3711
	Examiner Name	
	Attorney Docket Number	M55.2-14675-US02

CERTIFICATION STATEMENT

Please see 37 CFR 1.97 and 1.98 to make the appropriate selection(s):

☐ That each item of information contained in the information disclosure statement was first cited in any communication from a foreign patent office in a counterpart foreign application not more than three months prior to the filing of the information disclosure statement. See 37 CFR 1.97(e)(1).

OR

☐ That no item of information contained in the information disclosure statement was cited in a communication from a foreign patent office in a counterpart foreign application, and, to the knowledge of the person signing the certification after making reasonable inquiry, no item of information contained in the information disclosure statement was known to any individual designated in 37 CFR 1.56(c) more than three months prior to the filing of the information disclosure statement. See 37 CFR 1.97(e)(2).

☐ See attached certification statement.

☐ The fee set forth in 37 CFR 1.17 (p) has been submitted herewith.

☒ A certification statement is not submitted herewith.

SIGNATURE

A signature of the applicant or representative is required in accordance with CFR 1.33, 10.18. Please see CFR 1.4(d) for the form of the signature.

Signature	/Jeremy G Laabs/	Date (YYYY-MM-DD)	2011-01-04
Name/Print	Jeremy G. Laabs	Registration Number	53170

This collection of information is required by 37 CFR 1.97 and 1.98. The information is required to obtain or retain a benefit by the public which is to file (and by the USPTO to process) an application. Confidentiality is governed by 35 U.S.C. 122 and 37 CFR 1.14. This collection is estimated to take 1 hour to complete, including gathering, preparing and submitting the completed application form to the USPTO. Time will vary depending upon the individual case. Any comments on the amount of time you require to complete this form and/or suggestions for reducing this burden, should be sent to the Chief Information Officer, U.S. Patent and Trademark Office, U.S. Department of Commerce, P.O. Box 1450, Alexandria, VA 22313-1450. DO NOT SEND FEES OR COMPLETED FORMS TO THIS ADDRESS. **SEND TO: Commissioner for Patents, P.O. Box 1450, Alexandria, VA 22313-1450.**

Privacy Act Statement

The Privacy Act of 1974 (P.L. 93-579) requires that you be given certain information in connection with your submission of the attached form related to a patent application or patent. Accordingly, pursuant to the requirements of the Act, please be advised that: (1) the general authority for the collection of this information is 35 U.S.C. 2(b)(2); (2) furnishing of the information solicited is voluntary; and (3) the principal purpose for which the information is used by the U.S. Patent and Trademark Office is to process and/or examine your submission related to a patent application or patent. If you do not furnish the requested information, the U.S. Patent and Trademark Office may not be able to process and/or examine your submission, which may result in termination of proceedings or abandonment of the application or expiration of the patent.

The information provided by you in this form will be subject to the following routine uses:

1. The information on this form will be treated confidentially to the extent allowed under the Freedom of Information Act (5 U.S.C. 552) and the Privacy Act (5 U.S.C. 552a). Records from this system of records may be disclosed to the Department of Justice to determine whether the Freedom of Information Act requires disclosure of these record s.

2. A record from this system of records may be disclosed, as a routine use, in the course of presenting evidence to a court, magistrate, or administrative tribunal, including disclosures to opposing counsel in the course of settlement negotiations.

3. A record in this system of records may be disclosed, as a routine use, to a Member of Congress submitting a request involving an individual, to whom the record pertains, when the individual has requested assistance from the Member with respect to the subject matter of the record.

4. A record in this system of records may be disclosed, as a routine use, to a contractor of the Agency having need for the information in order to perform a contract. Recipients of information shall be required to comply with the requirements of the Privacy Act of 1974, as amended, pursuant to 5 U.S.C. 552a(m).

5. A record related to an International Application filed under the Patent Cooperation Treaty in this system of records may be disclosed, as a routine use, to the International Bureau of the World Intellectual Property Organization, pursuant to the Patent Cooperation Treaty.

6. A record in this system of records may be disclosed, as a routine use, to another federal agency for purposes of National Security review (35 U.S.C. 181) and for review pursuant to the Atomic Energy Act (42 U.S.C. 218(c)).

7. A record from this system of records may be disclosed, as a routine use, to the Administrator, General Services, or his/her designee, during an inspection of records conducted by GSA as part of that agency's responsibility to recommend improvements in records management practices and programs, under authority of 44 U.S.C. 2904 and 2906. Such disclosure shall be made in accordance with the GSA regulations governing inspection of records for this purpose, and any other relevant (i.e., GSA or Commerce) directive. Such disclosure shall not be used to make determinations about individuals.

8. A record from this system of records may be disclosed, as a routine use, to the public after either publication of the application pursuant to 35 U.S.C. 122(b) or issuance of a patent pursuant to 35 U.S.C. 151. Further, a record may be disclosed, subject to the limitations of 37 CFR 1.14, as a routine use, to the public if the record was filed in an application which became abandoned or in which the proceedings were terminated and which application is referenced by either a published application, an application open to public inspections or an issued patent.

9. A record from this system of records may be disclosed, as a routine use, to a Federal, State, or local law enforcement agency, if the USPTO becomes aware of a violation or potential violation of law or regulation.

PATENT

IN THE UNITED STATES PATENT AND TRADEMARK OFFICE

In re Application of:	**Mathew A. McPherson**
Application No.:	**12/895610**
Filed:	**September 30, 2010**
For:	**Archery Bow Cam**
Group Art Unit:	**3711**

Mail Stop _____
Commissioner for Patents
P.O. Box 1450
Alexandria, VA 22313-1450

Docket No.: M55.2P-14675-US02

TRANSMITTAL LETTER

1. In regard to the above-identified application, in addition to this **1** page transmittal letter, we are submitting the attached: **6 page Information Disclosure Statement.**

2. With respect to fees, applicant believes the fees required herein, if any, are being paid electronically.

3. **CONDITIONAL PETITION FOR EXTENSION OF TIME**
This conditional petition is being filed along with the papers identified in Item 1 above and provides for the possibility that Applicant has inadvertently overlooked the need for a petition and fee for extension of time or for a petition and fee for any other matter petitionable to the Commissioner as required. If any extension of time for the accompanying response is required or if a petition for any other matter is required, by petitioner, Applicant requests that this be considered a petition therefor.

4. **Notwithstanding paragraph 2 above, if any additional fees associated with this communication are required and have not otherwise been paid, including any fee associated with the Conditional Petition for Extension of Time, or any request in the accompanying papers for action which requires a fee as a petition to the Commissioner, please charge the additional fees to Deposit Account No. 22-0350. Please charge any additional fees associated with this communication to the Deposit Account No. 22-0350.**

5. **Certification:** I hereby certify that this Transmittal Letter and the paper(s) as described herein are being transmitted electronically to the USPTO on January 4, 2011.

Respectfully submitted,

VIDAS, ARRETT & STEINKRAUS

Date: January 4, 2011

By: /Jeremy G Laabs/
Jeremy G. Laabs
Registration No.: 53170

6640 Shady Oak Rd., Suite 400
Eden Prairie, MN 55344-7834
Telephone: (952) 563-3000
Facsimile: (952) 563-3001
f:\wpwork\jgl\14675us02_tra_20110104.doc

PATENT

IN THE UNITED STATES PATENT AND TRADEMARK OFFICE

In re Application of:	**Mathew A. McPherson**
Application No.:	**12/895610**
Filed:	**September 30, 2010**
For:	**Archery Bow Cam**
Group Art Unit:	**3711**

Mail Stop _____
Commissioner for Patents
P.O. Box 1450
Alexandria, VA 22313-1450

Docket No.: M55.2P-14675-US02

TRANSMITTAL LETTER

1. In regard to the above-identified application, in addition to this **1** page transmittal letter, we are submitting the attached: **1 page Response to Notice of Missing Parts; 1 page Declaration and 1 page Power of Attorney from Inventor(s).**

2. With respect to fees, applicant believes the fees required herein, if any, are being paid electronically.

3. **CONDITIONAL PETITION FOR EXTENSION OF TIME**
This conditional petition is being filed along with the papers identified in Item 1 above and provides for the possibility that Applicant has inadvertently overlooked the need for a petition and fee for extension of time or for a petition and fee for any other matter petitionable to the Commissioner as required. If any extension of time for the accompanying response is required or if a petition for any other matter is required, by petitioner, Applicant requests that this be considered a petition therefor.

4. **Notwithstanding paragraph 2 above, if any additional fees associated with this communication are required and have not otherwise been paid, including any fee associated with the Conditional Petition for Extension of Time, or any request in the accompanying papers for action which requires a fee as a petition to the Commissioner, please charge the additional fees to Deposit Account No. 22-0350. Please charge any additional fees associated with this communication to the Deposit Account No. 22-0350.**

5. **Certification:** I hereby certify that this Transmittal Letter and the paper(s) as described herein are being transmitted electronically to the USPTO on December 15, 2010.

Respectfully submitted,

VIDAS, ARRETT & STEINKRAUS

Date: December 15, 2010

By: /Jeremy G Laabs/
Jeremy G. Laabs
Registration No.: 53170

6640 Shady Oak Rd., Suite 400
Eden Prairie, MN 55344-7834
Telephone: (952) 563-3000
Facsimile: (952) 563-3001
f:\wpwork\jgl\14675us02_tra_20101215.doc

Amendments To The Specification:

On page 5, please amend the paragraph beginning on line 3 and ending on line 10 as follows:

The bow of Figure 7 further comprises a second power cable 26 that attaches to the second rotatable member 72 and extends toward the first limb 60, terminating on the first rotatable member 70, or in some embodiments, on the first axle 18 or first limb 60. In some embodiments, the configuration of the second rotatable member 72 is a mirror image of the first rotatable member 70. In some embodiments, the first and second power cables 24, 26 are essentially mirrored; however, a person of ordinary skill in the art would recognize that the cables 24, 26 may be held in a slightly displaced configuration by a cable guard ~~48~~ 49.

Archery Bow Cam

CROSS-REFERENCE TO RELATED APPLICATIONS

This application claims the benefit of US Provisional Patent Application No. 61/247473, the entire disclosure of which is hereby incorporated herein by reference.

BACKGROUND OF THE INVENTION

This invention relates generally to archery bows and more specifically to a cam configuration suitable for use in bows, such as a compound bow.

Archery bows are known in the art, and are generally configured for use by a particular user. Variable aspects of the bow, such as draw weight and draw length, are set to match the size and strength capabilities and preferences of the user. Adjustability of a bow allows for the bow to change with the user as the user's capabilities and preferences change over time. Adjustability also allows for a bow to be reconfigured for a different user.

There remains a need for novel bow and cam designs that provide for greater adjustability and are suitable for a wider range of potential users than prior art designs. There remains a need for novel bow and cam designs that allow for a greater range of draw weights and draw lengths to be achieved in a given bow.

All US patents and applications and all other published documents mentioned anywhere in this application are incorporated herein by reference in their entirety.

Without limiting the scope of the invention a brief summary of some of the claimed embodiments of the invention is set forth below. Additional details of the summarized embodiments of the invention and/or additional embodiments of the invention may be found in the Detailed Description of the Invention below.

A brief abstract of the technical disclosure in the specification is provided as well only for the purposes of complying with 37 C.F.R. 1.72. The abstract is not intended to be used for interpreting the scope of the claims.

BRIEF SUMMARY OF THE INVENTION

In at least one embodiment, an archery bow comprises a riser, a first limb and a second limb supported by the riser, a first rotatable member supported by the first limb on a first axle and a second rotatable member supported by the second limb on a second axle. The first rotatable member comprises a cam track, a capstan and a terminal. A drawstring extends between the first rotatable member and the second rotatable member. A power cable is attached to said terminal and extends toward the second limb. The power cable comprises an elongate straight portion located near said first rotatable member, a capstan portion in contact with said capstan and a terminal portion in contact with said terminal. In a brace condition, the power cable wraps around the capstan in a first rotational direction as the power cable is traversed from the elongate straight portion to the terminal portion. When the bow is drawn from the brace condition, the first rotatable member rotates in a second rotational direction that is opposite the first rotational direction.

In at least one embodiment, a bow further comprises a second power cable and the second rotatable member comprises a second cam track, a second capstan and a second terminal. The second power cable is attached to the second terminal and extends toward the first limb. The second power cable comprises a second elongate straight portion located near the second rotatable member, a second capstan portion in contact with the second capstan and a second terminal portion in contact with tje second terminal. In the brace condition, the second power cable wraps around the second capstan in the second rotational direction as the second power cable is traversed from the second elongate straight portion to the second terminal portion. When the bow is drawn from the brace condition, the second rotatable member rotates in the first rotational direction.

In at least one embodiment, the second rotatable member comprises a mirror image of the first rotatable member.

In some embodiments, in the brace condition, the elongate straight portion of the power cable defines a plane, wherein said first axle and said terminal are located on opposite sides of said plane.

In some embodiments, in the drawn condition, the capstan is located closer to the elongate straight portion than the terminal.

In some embodiments, in the brace condition, the power cable is not oriented in the cam track.

In some embodiments, a distance between the first axle and the terminal is greater than a distance between the first axle and the cam track.

In some embodiments, at least a portion of the cam track comprises a module that is attached to said first rotatable member. The module can be rotatable with respect to the first rotatable member and/or can be removable and replaceable with a separate module.

In at least one embodiment, an archery bow comprises a riser, a first limb and a second limb supported by the riser, a first rotatable member supported by the first limb on a first axle and a second rotatable member supported by the second limb on a second axle. The first axle and the second axle define an axle plane. The first rotatable member comprises a cam track, a capstan and a terminal. A drawstring extends between the first rotatable member and the second rotatable member. The drawstring leaves the first rotatable member at an exit location. A power cable is attached to the terminal and extends toward the second limb. The power cable comprises a capstan portion in contact with said capstan and a terminal portion in contact with said terminal. In a brace condition, the axle plane divides the first rotatable member to a first part and a second part, wherein the capstan and the terminal are located in the first part and the drawstring exit location is located in the second part. A distance between the terminal and the axle plane is greater than a distance between the capstan and the axle plane.

These and other embodiments which characterize the invention are pointed out with particularity in the claims annexed hereto and forming a part hereof. However, for a better understanding of the invention, its advantages and objectives obtained by its use, reference can be made to the drawings which form a further part hereof and the accompanying descriptive matter, in which there are illustrated and described various embodiments of the invention.

BRIEF DESCRIPTION OF THE DRAWINGS

A detailed description of the invention is hereafter described with specific reference being made to the drawings.

Figure 1 shows an embodiment of a cam suitable for use in a bow. The cam is shown in a brace orientation.

Figure 2 shows the cam of Figure 1 in a drawn orientation.

Figure 3 is a combination of Figures 1 and 2, which shows how the cam rotates.

Figure 4 shows another embodiment of a cam in a brace orientation.

Figure 5 shows the cam of Figure 4 in a drawn orientation.

Figure 6 is a combination of Figures 4 and 5, which shows how the cam rotates.

Figure 7 shows an embodiment of a compound archery bow.

DETAILED DESCRIPTION OF THE INVENTION

While this invention may be embodied in many different forms, there are described in detail herein specific embodiments of the invention. This description is an exemplification of the principles of the invention and is not intended to limit the invention to the particular embodiments illustrated.

For the purposes of this disclosure, like reference numerals in the figures shall refer to like features unless otherwise indicated.

Figure 7 shows an embodiment of a compound archery bow 50. Compound bows are generally known, for example as described in US 2010/0089375, the entire content of which is hereby incorporated herein by reference. Although Figure 7 shows a two cam bow, the cam configurations disclosed herein can be used on any type of compound archery bow, such as single cam bows, 1.5 cam bows, binary cam bows, crossbows, etc.

In some embodiments, a compound bow 50 comprises a riser 52, a first limb 60 and a second limb 62. The first limb 60 supports a first rotatable member 70 on a first axle 18, and the second limb 62 supports a second rotatable member 72 on a second axle 19. The first and second axles 18, 19 define an axle plane 46. A drawstring 20 extends between the rotatable members 70, 72. As shown in Figure 7, each rotatable member 70, 72 comprises a cam. The bow 50 comprises a power cable 24 that attaches to the first rotatable member 70 and extends toward the second limb 62, terminating on

the second rotatable member 72, or in some embodiments, on the second axle 19 or second limb 62.

The bow of Figure 7 further comprises a second power cable 26 that attaches to the second rotatable member 72 and extends toward the first limb 60, terminating on the first rotatable member 70, or in some embodiments, on the first axle 18 or first limb 60. In some embodiments, the configuration of the second rotatable member 72 is a mirror image of the first rotatable member 70. In some embodiments, the first and second power cables 24, 26 are essentially mirrored; however, a person of ordinary skill in the art would recognize that the cables 24, 26 may be held in a slightly displaced configuration by a cable guard 48.

The bow can be drawn throughout a plurality of draw orientations. An at-rest condition is generally considered a brace condition. The bow can be drawn by applying a rearward force to the drawstring 20, which causes the rotatable members 70, 72 to rotate. As the bow is drawn, the limbs 60, 62 flex and store energy. As the bow reached a fully drawn condition, the force required to hold back the drawstring 20 will let off due to the compounding configuration of the cam(s) and power cable(s).

Figures 1-3 show an embodiment of a cam 10 that is suitable for use in a compound archery bow 50, for example as the first rotatable member 70 and/or the second rotatable member 72 shown in Figure 7. A drawstring 20 is attached to the cam 10, which will typically extend to another rotatable member of the bow, such as a pulley or another cam, such as the second rotatable member 72 shown in Figure 7. A first power cable 24 is also attached to the cam 10. The first power cable 24 is arranged to contact a cam track 14 as the bow is drawn. The specific contour of the cam track 14 can impact and/or control various characteristics of the bow, such as the draw force profile, the draw length, the amount of force let-off provided by the compounding action, etc.

In some embodiments, the cam 10 comprises a body portion 12 and an adjustable module 16. The adjustable module 16 comprises at least a portion of the cam track 14, the orientation of the module 16 is adjustable with respect to the body portion 12. The module 16 is typically fastened to the body portion 12 in one of a plurality of predetermined orientations. As shown in Figure 1, the module 16 is rotatable about the axis of cam rotation, such as the axle 18. Adjustment of the module 16 with respect to

the body portion 12 will change characteristics of the bow, such as the draw length. In some embodiments, a module 16 can be removed and replaced with a second, interchangeable module that has a different shape. Adjustable modules and interchangeable modules are also discussed in US 2010/0089375.

The first power cable 24 will extend from an opposite limb or rotatable member to the cam 10. A second power cable 26 is also shown, which terminates by attaching to the axle 18. In some embodiments, the first power cable 24 will contact a portion of the cam surface/track 14 in the brace condition, depending on the specific cam design. The first power cable 24 includes an elongate straight portion 28 located near the cam 10. The first power cable 24 extends around a capstan 30 and attaches to a terminal post 32. The power cable 24 comprises a capstan portion 34 in contact with the capstan 30 and a terminal portion 36 in contact with the terminal 32. Desirably, the capstan 30 comprises a groove or track for the cable 24, which is aligned in a common plane with the cam surface/track 14. In some embodiments, the capstan 30 comprises a portion of the cam body 12.

In some embodiments, the location of the terminal post 32 and the shape of the capstan 30 result in the power cable 24 wrapping around the capstan 30 in a direction away from the axle 18 before terminating on the post 32. In some embodiments, the cable wraps around the capstan 30 in a direction opposite the direction of cam 10 rotation as the bowstring 20 is drawn. As shown in Figure 1, the cam 10 will rotate in a first rotational direction 76 (e.g. clockwise) when drawn, and the power cable 24 wraps around the capstan 30 and extends toward the terminal post 32 in a second rotational direction 78 (e.g. counter-clockwise) that is opposite the first rotational direction as the power cable 24 is traversed from the elongate straight portion 28 toward the terminal portion 36.

In some embodiments, the elongate straight portion 28 defines a cable plane 44, and the first axle 18 and the terminal 32 are located on opposite sides of the cable plane 44.

In some embodiments, a distance between the first axle 18 and the terminal 32 is greater than a distance between the first axle 18 and a portion of the cam track 14.

The drawstring 20 leaves the cam 10 at an exit location 22. The axle

plane 46 described with respect to Figure 7 is illustrated in Figure 1. The axle plane 46 divides the cam 10 into a first part 47 and a second part 48. The capstan 30 and terminal 32 are located in the first part 47, and the drawstring 20 exit location 22 is located in the second part 48. A distance between the terminal 32 and the axle plane 46 is greater than a distance between the capstan 30 and the axle plane 46. Preferably, the distances are measured in a direction orthogonal to the axle plane 46 – thus, the recited distances are the shortest distances between the axle plane 46 and the cam portions at issue.

The cam 10 shown in Figure 1 is suitable for use in a two cam bow, wherein a second cam comprises a mirror image of the cam 10. The features shown and described with respect to Figure 1 can be duplicated in mirror image and be used as a second rotatable member 72 as shown in Figure 7. For example, the second power cable 26 shown in Figure 1 would wrap around a second capstan and attach to a second terminal on the second cam. It should be noted that the second cam would rotate in the second rotational direction 78 and the second power cable 26 would wrap around the second capstan in the first rotational direction 76.

Figure 2 shows the cam 10 of Figure 1 in a drawn condition. The cam 10 has rotated about the axle 18 approximately 225 degrees from the condition of Figure 1. The first power cable 24 extends around the adjustable module 16 contacting almost a complete periphery of the module 16. The first power cable 24 then wraps around the capstan 30 and terminates on the terminal post 32.

As shown in Figure 2, the capstan 30 comes close to contacting the power cable 24, resulting in a portion the power cable 24 almost contacting itself. Such contact is often a limiting factor in cam design, which limits the amount of rotation that can be achieved. Having the cable 24 wrap around the capstan 30 and extend in a direction opposite of cam rotation provides for some added draw capability. From Figure 2, it is clear that if the power cable 24 wrapped in the same direction as cam rotation, and the terminal post 32 were located on the other side of the capstan 30, rotation capability would be substantially diminished.

In some embodiments, the use of a capstan 30 is beneficial because the location of the power cable 24 as it wraps about the capstan 30 is effectively fixed. In various cam designs where a capstan 30 is not used, the power cable 24 often extends directly to the terminal post 32, allowing the power cable to rotate about the terminal

post 32. Thus, the capstan 30 can be used to secure the power cable 24 such that it does not rotate about the terminal post 32. Also, a power cable 24 often splits to form a loop 25 at the terminal post 32. When an arrow is fired, high forces and vibrations are typically present in the cable 24. The capstan 30 causes reaction forces to be applied to portions of the cable 24 having a full cross-sectional area, whereas if the capstan 30 were omitted, reaction forces could be applied to the smaller cross-sectional area loop 25 portion.

As shown in Figure 2, in the drawn condition, the first power cable 24 comprises an elongate straight portion 28 that is located near the cam 10 and extends away from the cam 10. In some embodiments, in the drawn condition, the capstan 30 is located closer to the elongate straight portion 28 than the terminal 32.

Figure 3 shows a combination of Figures 1 and 2, wherein the subject matter of Figure 1 (brace condition) is shown in dashed lines and the subject matter of Figure 2 (drawn condition) is shown in solid lines.

Figures 4-6 show another embodiment of a cam 10 in various orientations. Figure 4 shows a brace orientation, Figure 5 shows a drawn orientation and Figure 6 shows the cam in both orientations. Like reference characters indicate like features when compared to Figures 1-3.

In Figure 4, the first power cable 24 does not contact the cam surface 14 when in the brace condition. The capstan 30 works to locate and secure the power cable 24. The power cable 24 wraps around the capstan 30 and extends in a direction away from the axle 18. The power cable 24 wraps around the capstan 30 in the second rotational direction 78 as the power cable is traversed from the elongate straight portion 28 toward the terminal 32. The cam 10 rotates in the first rotational direction 76 as the bowstring 20 is drawn.

The cam track 14 comprises a fixed portion 56 and a removable portion 58. The removable portion 58 is shaded for clarification in Figure 4. The removable portion 58 can be detached and replaced with another embodiment of a removable portion 58 that is shaped differently and is interchangeable. This allows the bow to be configured for different characteristics, such as changing draw length and/or draw weight.

When the power cable 24 does not contact the removable portion 58 of the cam track 14 in the brace condition, the removable portion 58 can be removed without the use of specialized bow servicing equipment, such as a bow press.

Preferably, the power cable 24 will initially contact the fixed portion 56 of the cam track 14 as the drawstring 20 is drawn.

In Figure 4, a second power cable 26 attaches to a force vectoring anchor 40, for example as disclosed in US 2010/0089375.

The above disclosure is intended to be illustrative and not exhaustive. This description will suggest many variations and alternatives to one of ordinary skill in this field of art. All these alternatives and variations are intended to be included within the scope of the claims where the term "comprising" means "including, but not limited to." Those familiar with the art may recognize other equivalents to the specific embodiments described herein which equivalents are also intended to be encompassed by the claims.

Further, the particular features presented in the dependent claims can be combined with each other in other manners within the scope of the invention such that the invention should be recognized as also specifically directed to other embodiments having any other possible combination of the features of the dependent claims. For instance, for purposes of claim publication, any dependent claim which follows should be taken as alternatively written in a multiple dependent form from all prior claims which possess all antecedents referenced in such dependent claim if such multiple dependent format is an accepted format within the jurisdiction (e.g. each claim depending directly from claim 1 should be alternatively taken as depending from all previous claims). In jurisdictions where multiple dependent claim formats are restricted, the following dependent claims should each be also taken as alternatively written in each singly dependent claim format which creates a dependency from a prior antecedent-possessing claim other than the specific claim listed in such dependent claim below.

This completes the description of the preferred and alternate embodiments of the invention. Those skilled in the art may recognize other equivalents to the specific embodiment described herein which equivalents are intended to be encompassed by the claims attached hereto.

Search Notes	Application/Control No.	Applicant(s)/Patent Under Reexamination
	12895610	MCPHERSON, MATHEW A.
	Examiner	**Art Unit**
	JOHN E SIMMS JR	3711

CPC- SEARCHED

Symbol	Date	Examiner

CPC COMBINATION SETS - SEARCHED

Symbol	Date	Examiner

US CLASSIFICATION SEARCHED

Class	Subclass	Date	Examiner
124	25.6, 900 (crossed with text)	25 October 2012	JS

SEARCH NOTES

Search Notes	Date	Examiner
consult John Ricci - class 124	25 October 2012	JS
inventor search	25 October 2012	JS
updated search	25 March 2013	JS
updated search	8 November 2013	JS
updated search	10 January 2014	JS

INTERFERENCE SEARCH

US Class/ CPC Symbol	US Subclass / CPC Group	Date	Examiner
124	25.6, 900 (crossed with text)	7 November 2013	JS

/JOHN E SIMMS JR/ Examiner.Art Unit 3711	

IPR2024-00523
Ravin EX1014 Page 22

Search Notes	Application/Control No.	Applicant(s)/Patent Under Reexamination
	12895610	MCPHERSON, MATHEW A.
	Examiner	**Art Unit**
	JOHN E SIMMS JR	3711

CPC- SEARCHED

Symbol	Date	Examiner

CPC COMBINATION SETS - SEARCHED

Symbol	Date	Examiner

US CLASSIFICATION SEARCHED

Class	Subclass	Date	Examiner
124	25.6, 900 (crossed with text)	25 October 2012	JS

SEARCH NOTES

Search Notes	Date	Examiner
consult John Ricci - class 124	25 October 2012	JS
inventor search	25 October 2012	JS
updated search	25 March 2013	JS
updated search	8 November 2013	JS

INTERFERENCE SEARCH

US Class/ CPC Symbol	US Subclass / CPC Group	Date	Examiner
124	25.6, 900 (crossed with text)	7 November 2013	JS

/JOHN E SIMMS JR/ Examiner.Art Unit 3711	

IPR2024-00523
Ravin EX1014 Page 23

Search Notes	Application/Control No.	Applicant(s)/Patent Under Reexamination
	12895610	MCPHERSON, MATHEW A.
	Examiner	**Art Unit**
	JOHN E SIMMS JR	3711

CPC- SEARCHED

Symbol	Date	Examiner

CPC COMBINATION SETS - SEARCHED

Symbol	Date	Examiner

US CLASSIFICATION SEARCHED

Class	Subclass	Date	Examiner
124	25.6, 900 (crossed with text)	25 October 2012	JS

SEARCH NOTES

Search Notes	Date	Examiner
consult John Ricci - class 124	25 October 2012	JS
inventor search	25 October 2012	JS
updated search	25 March 2013	JS

INTERFERENCE SEARCH

US Class/ CPC Symbol	US Subclass / CPC Group	Date	Examiner

/JOHN E SIMMS JR/ Examiner.Art Unit 3711	

Search Notes	Application/Control No.	Applicant(s)/Patent Under Reexamination
	12895610	MCPHERSON, MATHEW A.
	Examiner	**Art Unit**
	JOHN E SIMMS JR	3711

SEARCHED

Class	Subclass	Date	Examiner
124	25.6, 900 (crossed with text)	25 October 2012	JS

SEARCH NOTES

Search Notes	Date	Examiner
consult John Ricci - class 124	25 October 2012	JS
inventor search	25 October 2012	JS

INTERFERENCE SEARCH

Class	Subclass	Date	Examiner

/JOHN E SIMMS JR/ Examiner.Art Unit 3711	

PATENT

IN THE UNITED STATES PATENT AND TRADEMARK OFFICE

In re Application of:	**Mathew A. McPherson**
Application No.:	**12/895610**
Filed:	**September 30, 2010**
For:	**Archery Bow Cam**
Examiner:	**John Elliott Simms, Jr.**
Group Art Unit:	**3711**

Mail Stop AF
Commissioner for Patents
P.O. Box 1450
Alexandria, VA 22313-1450

Docket No.: M55.2P-14675-US02

AMENDMENT AFTER FINAL

This Amendment is in response to the Office Action dated **March 29, 2013.**

If an extension of time is required to make this response timely and no separate petition is enclosed, Applicant hereby petitions for an extension of time sufficient to make the response timely. In the event that this response requires the payment of government fees and payment is not enclosed, please charge Deposit Account No. 22-0350.

Please amend the application as follows:

PTO/SB/30EFS (07-09)
Approved for use through 07/31/2012. OMB 0651-0031
U.S. Patent and Trademark Office; U.S. DEPARTMENT OF COMMERCE
Under the Paperwork Reduction Act of 1995, no persons are required to respond to a collection of information unless it contains a valid OMB control number.

REQUEST FOR CONTINUED EXAMINATION(RCE)TRANSMITTAL
(Submitted Only via EFS-Web)

Application Number	12895610	Filing Date	2010-09-30	Docket Number (if applicable)	M55.2-14675-US02	Art Unit	3711
First Named Inventor	Mathew A. McPherson			Examiner Name	John Elliott Simms, Jr.		

This is a Request for Continued Examination (RCE) under 37 CFR 1.114 of the above-identified application.
Request for Continued Examination (RCE) practice under 37 CFR 1.114 does not apply to any utility or plant application filed prior to June 8, 1995, or to any design application. The Instruction Sheet for this form is located at WWW.USPTO.GOV

SUBMISSION REQUIRED UNDER 37 CFR 1.114

Note: If the RCE is proper, any previously filed unentered amendments and amendments enclosed with the RCE will be entered in the order in which they were filed unless applicant instructs otherwise. If applicant does not wish to have any previously filed unentered amendment(s) entered, applicant must request non-entry of such amendment(s).

☒ Previously submitted. If a final Office action is outstanding, any amendments filed after the final Office action may be considered as a submission even if this box is not checked.

☐ Consider the arguments in the Appeal Brief or Reply Brief previously filed on _____

☐ Other _____

☒ Enclosed

☒ Amendment/Reply

☐ Information Disclosure Statement (IDS)

☐ Affidavit(s)/ Declaration(s)

☐ Other _____

MISCELLANEOUS

☐ Suspension of action on the above-identified application is requested under 37 CFR 1.103(c) for a period of months _____
(Period of suspension shall not exceed 3 months; Fee under 37 CFR 1.17(i) required)

☐ Other _____

FEES

The RCE fee under 37 CFR 1.17(e) is required by 37 CFR 1.114 when the RCE is filed.
☒ The Director is hereby authorized to charge any underpayment of fees, or credit any overpayments, to Deposit Account No 220350

SIGNATURE OF APPLICANT, ATTORNEY, OR AGENT REQUIRED

☒ Patent Practitioner Signature

☐ Applicant Signature

PTO/SB/30EFS (07-09)
Approved for use through 07/31/2012. OMB 0651-0031
U.S. Patent and Trademark Office; U.S. DEPARTMENT OF COMMERCE
Under the Paperwork Reduction Act of 1995, no persons are required to respond to a collection of information unless it contains a valid OMB control number.

Signature of Registered U.S. Patent Practitioner			
Signature	/Jeremy G Laabs/	Date (YYYY-MM-DD)	2013-07-01
Name	Jeremy G. Laabs	Registration Number	53170

This collection of information is required by 37 CFR 1.114. The information is required to obtain or retain a benefit by the public which is to file (and by the USPTO to process) an application. Confidentiality is governed by 35 U.S.C. 122 and 37 CFR 1.11 and 1.14. This collection is estimated to take 12 minutes to complete, including gathering, preparing, and submitting the completed application form to the USPTO. Time will vary depending upon the individual case. Any comments on the amount of time you require to complete this form and/or suggestions for reducing this burden, should be sent to the Chief Information Officer, U.S. Patent and Trademark Office, U.S. Department of Commerce, P.O. Box 1450, Alexandria, VA 22313-1450.

If you need assistance in completing the form, call 1-800-PTO-9199 and select option 2.

Privacy Act Statement

The Privacy Act of 1974 (P.L. 93-579) requires that you be given certain information in connection with your submission of the attached form related to a patent application or patent. Accordingly, pursuant to the requirements of the Act, please be advised that: (1) the general authority for the collection of this information is 35 U.S.C. 2(b)(2); (2) furnishing of the information solicited is voluntary; and (3) the principal purpose for which the information is used by the U.S. Patent and Trademark Office is to process and/or examine your submission related to a patent application or patent. If you do not furnish the requested information, the U.S. Patent and Trademark Office may not be able to process and/or examine your submission, which may result in termination of proceedings or abandonment of the application or expiration of the patent.

The information provided by you in this form will be subject to the following routine uses:

1. The information on this form will be treated confidentially to the extent allowed under the Freedom of Information Act (5 U.S.C. 552) and the Privacy Act (5 U.S.C. 552a). Records from this system of records may be disclosed to the Department of Justice to determine whether the Freedom of Information Act requires disclosure of these records.

2. A record from this system of records may be disclosed, as a routine use, in the course of presenting evidence to a court, magistrate, or administrative tribunal, including disclosures to opposing counsel in the course of settlement negotiations.

3. A record in this system of records may be disclosed, as a routine use, to a Member of Congress submitting a request involving an individual, to whom the record pertains, when the individual has requested assistance from the Member with respect to the subject matter of the record.

4. A record in this system of records may be disclosed, as a routine use, to a contractor of the Agency having need for the information in order to perform a contract. Recipients of information shall be required to comply with the requirements of the Privacy Act of 1974, as amended, pursuant to 5 U.S.C. 552a(m).

5. A record related to an International Application filed under the Patent Cooperation Treaty in this system of records may be disclosed, as a routine use, to the International Bureau of the World Intellectual Property Organization, pursuant to the Patent Cooperation Treaty.

6. A record in this system of records may be disclosed, as a routine use, to another federal agency for purposes of National Security review (35 U.S.C. 181) and for review pursuant to the Atomic Energy Act (42 U.S.C. 218(c)).

7. A record from this system of records may be disclosed, as a routine use, to the Administrator, General Services, or his/her designee, during an inspection of records conducted by GSA as part of that agency's responsibility to recommend improvements in records management practices and programs, under authority of 44 U.S.C. 2904 and 2906. Such disclosure shall be made in accordance with the GSA regulations governing inspection of records for this purpose, and any other relevant (i.e., GSA or Commerce) directive. Such disclosure shall not be used to make determinations about individuals.

8. A record from this system of records may be disclosed, as a routine use, to the public after either publication of the application pursuant to 35 U.S.C. 122(b) or issuance of a patent pursuant to 35 U.S.C. 151. Further, a record may be disclosed, subject to the limitations of 37 CFR 1.14, as a routine use, to the public if the record was filed in an application which became abandoned or in which the proceedings were terminated and which application is referenced by either a published application, an application open to public inspections or an issued patent.

9. A record from this system of records may be disclosed, as a routine use, to a Federal, State, or local law enforcement agency, if the USPTO becomes aware of a violation or potential violation of law or regulation.

AO 120 (Rev. 08/10)

TO:	Mail Stop 8 Director of the U.S. Patent and Trademark Office P.O. Box 1450 Alexandria, VA 22313–1450	REPORT ON THE FILING OR DETERMINATION OF AN ACTION REGARDING A PATENT OR TRADEMARK

In Compliance with 35 U.S.C. § 290 and/or 15 U.S.C. 1116, you are hereby advised that a court action has been filed in the U.S. District Court for the District of Oregon on the following

☐ Trademarks or ☑ Patents (☐ the patent action involves 35 U.S.C. § 292):

DOCKET NO.	DATE FILED	U.S. DISTRICT COURT
6:18–cv–01087–JR	6/21/2018	District of Oregon

PLAINTIFF	DEFENDANT
MCP IP, LLC	Bowtech, Inc.

PATENT OR TRADEMARK NO.	DATE OF PATENT OR TRADEMARK	HOLDER OF PATENT OR TRADEMARK
1 7,946,281	5/24/2011	MCP IP
2 8,443,791	5/21/2013	MCP IP
3 8,919,333	12/30/2014	MCP IP
4 9,423,201	8/23/2016	MCP IP
5 9,816,775	11/14/2017	MCP IP

In the above–entitled case, the following patent(s)/trademark(s) have been included:

DATE INCLUDED	INCLUDED BY ☐ Amendment ☐ Answer ☐ Cross Bill ☐ Other Pleading	
PATENT OR TRADEMARK NO.	DATE OF PATENT OR TRADEMARK	HOLDER OF PATENT OR TRADEMARK
1		
2		
3		
4		
5		

In the above–entitled case, the following decision has been rendered or judgment issued:

DECISION/JUDGMENT		
CLERK MARY L. MORAN	(BY) DEPUTY CLERK K. Finerson	DATE 6/21/2018

Copy 1 Upon initiation of action, mail this copy to Director Copy 3 Upon termination of action, mail this copy to Director
Copy 2 Upon filing document adding patent(s), mail this copy to Director Copy 4 Case file copy

PATENT OR TRADEMARK NO.	DATE OF PATENT OR TRADEMARK	HOLDER OF PATENT OR TRADEMARK
6,035,840	3/14/00	MCP IP
8,683,989	4/1/14	MCP IP
9,354,017	5/31/16	MCP IP
8,453,635	6/4/13	MCP IP
8,701,644	4/22/14	MCP IP
9,285,180	3/15/16	MCP IP
9,644,918	5/9/17	MCP IP
8,047,189	11/1/11	MCP IP
8,408,192	4/2/13	MCP IP
8,505,526	8/13/13	MCP IP
9,389,040	7/12/16	MCP IP
7,987,842	8/2/11	MCP IP
8,596,256	12/3/13	MCP IP
9,400,154	7/26/16	MCP IP
8,402,960	3/26/13	MCP IP
8,671,929	3/18/14	MCP IP
9,909,831	3/6/18	MCP IP
9,851,169	12/26/17	MCP IP
9,829,271	11/28/17	MCP IP

UTILITY PATENT

IN THE UNITED STATES PATENT AND TRADEMARK OFFICE

Inventor(s):	**Mathew A. McPherson**
Title:	**Archery Bow Cam**
Filed:	**September 30, 2010**
App. No. :	**12/895610**

Commissioner for Patents
P.O. Box 1450
Alexandria, VA 22313-1450

Docket No.: M55.2P-14675-US02

POWER OF ATTORNEY FROM INVENTOR(S)

As a below named inventor of the subject matter of the above identified patent application, I/we hereby appoint all practitioners of **Customer No. 490** to prosecute this application and to transact all business in the Patent and Trademark Office connected therewith. I hereby authorize them to act and rely on instructions from, and to communicate directly with, the firm or person which sent this case to Vidas, Arrett & Steinkraus, P.A., unless or until I/we instruct Vidas, Arrett & Steinkraus P.A., in writing to the contrary.

Address all correspondence to **Jeremy G. Laabs** at Customer Number 490.

Date: Dec 14, 2010

Mathew A. McPherson

DECLARATION (37 CFR 1.63) FOR UTILITY OR DESIGN APPLICATION USING AN APPLICATION DATA SHEET (37 CFR 1.76)

Docket No.: **M55.2P-14675-US02**

Title of Invention: **Archery Bow Cam**

As the below named inventor(s), I/We declare that:

This declaration is directed to:

☐ The attached application, or

☒ Application No. 12/895610, filed on September 30, 2010,

☐ as amended on _____ (if applicable);

I/we believe that I/we am/are the original and first inventor(s) of the subject matter which is claimed and for which a patent is sought;

I/we have reviewed and understand the contents of the above-identified application, including the claims, as amended by an amendment specifically referred to above;

I/we acknowledge the duty to disclose to the United States Patent and Trademark Office all information known to me/us to be material to patentability as defined in 37 CFR 1.56, including for continuation-in-part applications, material information which became available between the filing date of the prior application and the national or PCT International filing date of the continuation-in-part application.

All statements made herein of my/our own knowledge are true, all statements made on information and belief are believed to be true, and further that these statements were made with the knowledge that willful false statements and the like are punishable by fine or imprisonment, or both, under 18 U.S.C. 1001, and may jeopardize the validity of the application or any patent issuing thereon.

FULL NAME OF INVENTOR(S)

Inventor 1: Mathew A. McPherson

Signature: _____ Citizen of: USA

Date: Dec 14, 2010

UNITED STATES PATENT AND TRADEMARK OFFICE

UNITED STATES DEPARTMENT OF COMMERCE
United States Patent and Trademark Office
Address: COMMISSIONER FOR PATENTS
P.O. Box 1450
Alexandria, Virginia 22313-1450
www.uspto.gov

APPLICATION NUMBER	FILING OR 371(C) DATE	FIRST NAMED APPLICANT	ATTY. DOCKET NO./TITLE
12/895,610	09/30/2010	Mathew A. McPherson	M55.2-14675-US02

CONFIRMATION NO. 8071

FORMALITIES LETTER

490
VIDAS, ARRETT & STEINKRAUS, P.A.
SUITE 400, 6640 SHADY OAK ROAD
EDEN PRAIRIE, MN 55344

OC000000044013787

Date Mailed: 10/20/2010

NOTICE TO FILE MISSING PARTS OF NONPROVISIONAL APPLICATION

FILED UNDER 37 CFR 1.53(b)

Filing Date Granted

Items Required To Avoid Abandonment:

An application number and filing date have been accorded to this application. The item(s) indicated below, however, are missing. Applicant is given **TWO MONTHS** from the date of this Notice within which to file all required items and pay any fees required below to avoid abandonment. Extensions of time may be obtained by filing a petition accompanied by the extension fee under the provisions of 37 CFR 1.136(a).

- The oath or declaration is missing.
  A properly signed oath or declaration in compliance with 37 CFR 1.63, identifying the application by the above Application Number and Filing Date, is required.
  Note: If a petition under 37 CFR 1.47 is being filed, an oath or declaration in compliance with 37 CFR 1.63 signed by all available joint inventors, or if no inventor is available by a party with sufficient proprietary interest, is required.

The applicant needs to satisfy supplemental fees problems indicated below.

The required item(s) identified below must be timely submitted to avoid abandonment:

- To avoid abandonment, a surcharge (for late submission of filing fee, search fee, examination fee or oath or declaration) as set forth in 37 CFR 1.16(f) of $**65** for a small entity in compliance with 37 CFR 1.27, must be submitted with the missing items identified in this notice.

SUMMARY OF FEES DUE:

Total additional fee(s) required for this application is $**65** for a small entity
- $**65** Surcharge.

IPR2024-00523
Ravin EX1014 Page 34

Replies should be mailed to:

Mail Stop Missing Parts
Commissioner for Patents
P.O. Box 1450
Alexandria VA 22313-1450

Registered users of EFS-Web may alternatively submit their reply to this notice via EFS-Web.
https://sportal.uspto.gov/authenticate/AuthenticateUserLocalEPF.html

For more information about EFS-Web please call the USPTO Electronic Business Center at **1-866-217-9197** or visit our website at http://www.uspto.gov/ebc.

If you are not using EFS-Web to submit your reply, you must include a copy of this notice.

/masfaw/

Office of Data Management, Application Assistance Unit (571) 272-4000, or (571) 272-4200, or 1-888-786-0101

UNITED STATES PATENT AND TRADEMARK OFFICE

UNITED STATES DEPARTMENT OF COMMERCE
United States Patent and Trademark Office
Address: COMMISSIONER FOR PATENTS
P.O. Box 1450
Alexandria, Virginia 22313-1450
www.uspto.gov

NOTICE OF ALLOWANCE AND FEE(S) DUE

490 7590 02/05/2014
VIDAS, ARRETT & STEINKRAUS, P.A.
Richard A. Arrett
SUITE 400, 6640 SHADY OAK ROAD
6640 Shady Oak Rd.
EDEN PRAIRIE, MN 55344

EXAMINER
SIMMS JR, JOHN ELLIOTT

ART UNIT	PAPER NUMBER
3711	

DATE MAILED: 02/05/2014

APPLICATION NO.	FILING DATE	FIRST NAMED INVENTOR	ATTORNEY DOCKET NO.	CONFIRMATION NO.
12/895,610	09/30/2010	Mathew A. McPherson	M55.2P-14675-US02	8071

TITLE OF INVENTION: Archery Bow Cam

APPLN. TYPE	ENTITY STATUS	ISSUE FEE DUE	PUBLICATION FEE DUE	PREV. PAID ISSUE FEE	TOTAL FEE(S) DUE	DATE DUE
nonprovisional	SMALL	$480	$0	$0	$480	05/05/2014

THE APPLICATION IDENTIFIED ABOVE HAS BEEN EXAMINED AND IS ALLOWED FOR ISSUANCE AS A PATENT. PROSECUTION ON THE MERITS IS CLOSED. THIS NOTICE OF ALLOWANCE IS NOT A GRANT OF PATENT RIGHTS. THIS APPLICATION IS SUBJECT TO WITHDRAWAL FROM ISSUE AT THE INITIATIVE OF THE OFFICE OR UPON PETITION BY THE APPLICANT. SEE 37 CFR 1.313 AND MPEP 1308.

THE ISSUE FEE AND PUBLICATION FEE (IF REQUIRED) MUST BE PAID WITHIN THREE MONTHS FROM THE MAILING DATE OF THIS NOTICE OR THIS APPLICATION SHALL BE REGARDED AS ABANDONED. THIS STATUTORY PERIOD CANNOT BE EXTENDED. SEE 35 U.S.C. 151. THE ISSUE FEE DUE INDICATED ABOVE DOES NOT REFLECT A CREDIT FOR ANY PREVIOUSLY PAID ISSUE FEE IN THIS APPLICATION. IF AN ISSUE FEE HAS PREVIOUSLY BEEN PAID IN THIS APPLICATION (AS SHOWN ABOVE), THE RETURN OF PART B OF THIS FORM WILL BE CONSIDERED A REQUEST TO REAPPLY THE PREVIOUSLY PAID ISSUE FEE TOWARD THE ISSUE FEE NOW DUE.

HOW TO REPLY TO THIS NOTICE:

I. Review the ENTITY STATUS shown above. If the ENTITY STATUS is shown as SMALL or MICRO, verify whether entitlement to that entity status still applies.

If the ENTITY STATUS is the same as shown above, pay the TOTAL FEE(S) DUE shown above.

If the ENTITY STATUS is changed from that shown above, on PART B - FEE(S) TRANSMITTAL, complete section number 5 titled "Change in Entity Status (from status indicated above)".

For purposes of this notice, small entity fees are 1/2 the amount of undiscounted fees, and micro entity fees are 1/2 the amount of small entity fees.

II. PART B - FEE(S) TRANSMITTAL, or its equivalent, must be completed and returned to the United States Patent and Trademark Office (USPTO) with your ISSUE FEE and PUBLICATION FEE (if required). If you are charging the fee(s) to your deposit account, section "4b" of Part B - Fee(s) Transmittal should be completed and an extra copy of the form should be submitted. If an equivalent of Part B is filed, a request to reapply a previously paid issue fee must be clearly made, and delays in processing may occur due to the difficulty in recognizing the paper as an equivalent of Part B.

III. All communications regarding this application must give the application number. Please direct all communications prior to issuance to Mail Stop ISSUE FEE unless advised to the contrary.

IMPORTANT REMINDER: Utility patents issuing on applications filed on or after Dec. 12, 1980 may require payment of maintenance fees. It is patentee's responsibility to ensure timely payment of maintenance fees when due.

IPR2024-00523
Ravin EX1014 Page 36

PART B - FEE(S) TRANSMITTAL

Complete and send this form, together with applicable fee(s), to: Mail **Mail Stop ISSUE FEE**
Commissioner for Patents
P.O. Box 1450
Alexandria, Virginia 22313-1450
or Fax (571)-273-2885

INSTRUCTIONS: This form should be used for transmitting the ISSUE FEE and PUBLICATION FEE (if required). Blocks 1 through 5 should be completed where appropriate. All further correspondence including the Patent, advance orders and notification of maintenance fees will be mailed to the current correspondence address as indicated unless corrected below or directed otherwise in Block 1, by (a) specifying a new correspondence address; and/or (b) indicating a separate "FEE ADDRESS" for maintenance fee notifications.

CURRENT CORRESPONDENCE ADDRESS (Note: Use Block 1 for any change of address)

490 7590 02/05/2014
VIDAS, ARRETT & STEINKRAUS, P.A.
Richard A. Arrett
SUITE 400, 6640 SHADY OAK ROAD
6640 Shady Oak Rd.
EDEN PRAIRIE, MN 55344

Note: A certificate of mailing can only be used for domestic mailings of the Fee(s) Transmittal. This certificate cannot be used for any other accompanying papers. Each additional paper, such as an assignment or formal drawing, must have its own certificate of mailing or transmission.

Certificate of Mailing or Transmission
I hereby certify that this Fee(s) Transmittal is being deposited with the United States Postal Service with sufficient postage for first class mail in an envelope addressed to the Mail Stop ISSUE FEE address above, or being facsimile transmitted to the USPTO (571) 273-2885, on the date indicated below.

(Depositor's name)
(Signature)
(Date)

APPLICATION NO.	FILING DATE	FIRST NAMED INVENTOR	ATTORNEY DOCKET NO.	CONFIRMATION NO.
12/895,610	09/30/2010	Mathew A. McPherson	M55.2P-14675-US02	8071

TITLE OF INVENTION: Archery Bow Cam

APPLN. TYPE	ENTITY STATUS	ISSUE FEE DUE	PUBLICATION FEE DUE	PREV. PAID ISSUE FEE	TOTAL FEE(S) DUE	DATE DUE
nonprovisional	SMALL	$480	$0	$0	$480	05/05/2014

EXAMINER	ART UNIT	CLASS-SUBCLASS
SIMMS JR, JOHN ELLIOTT	3711	124-025600

1. Change of correspondence address or indication of "Fee Address" (37 CFR 1.363).
❑ Change of correspondence address (or Change of Correspondence Address form PTO/SB/122) attached.
❑ "Fee Address" indication (or "Fee Address" Indication form PTO/SB/47; Rev 03-02 or more recent) attached. **Use of a Customer Number is required.**

2. For printing on the patent front page, list
(1) The names of up to 3 registered patent attorneys or agents OR, alternatively,
(2) The name of a single firm (having as a member a registered attorney or agent) and the names of up to 2 registered patent attorneys or agents. If no name is listed, no name will be printed.
1_____
2_____
3_____

3. ASSIGNEE NAME AND RESIDENCE DATA TO BE PRINTED ON THE PATENT (print or type)
PLEASE NOTE: Unless an assignee is identified below, no assignee data will appear on the patent. If an assignee is identified below, the document has been filed for recordation as set forth in 37 CFR 3.11. Completion of this form is NOT a substitute for filing an assignment.
(A) NAME OF ASSIGNEE (B) RESIDENCE: (CITY and STATE OR COUNTRY)

Please check the appropriate assignee category or categories (will not be printed on the patent) : ❑ Individual ❑ Corporation or other private group entity ❑ Government

4a. The following fee(s) are submitted:
❑ Issue Fee
❑ Publication Fee (No small entity discount permitted)
❑ Advance Order - # of Copies _____

4b. Payment of Fee(s): **(Please first reapply any previously paid issue fee shown above)**
❑ A check is enclosed.
❑ Payment by credit card. Form PTO-2038 is attached.
❑ The Director is hereby authorized to charge the required fee(s), any deficiency, or credits any overpayment, to Deposit Account Number _____ (enclose an extra copy of this form).

5. **Change in Entity Status** (from status indicated above)
❑ Applicant certifying micro entity status. See 37 CFR 1.29
NOTE: Absent a valid certification of Micro Entity Status (see forms PTO/SB/15A and 15B), issue fee payment in the micro entity amount will not be accepted at the risk of application abandonment.
❑ Applicant asserting small entity status. See 37 CFR 1.27
NOTE: If the application was previously under micro entity status, checking this box will be taken to be a notification of loss of entitlement to micro entity status.
❑ Applicant changing to regular undiscounted fee status.
NOTE: Checking this box will be taken to be a notification of loss of entitlement to small or micro entity status, as applicable.

NOTE: This form must be signed in accordance with 37 CFR 1.31 and 1.33. See 37 CFR 1.4 for signature requirements and certifications.

Authorized Signature _____ Date _____

Typed or printed name _____ Registration No. _____

IPR2024-00523
Ravin EX1014 Page 37

UNITED STATES PATENT AND TRADEMARK OFFICE

UNITED STATES DEPARTMENT OF COMMERCE
United States Patent and Trademark Office
Address: COMMISSIONER FOR PATENTS
P.O. Box 1450
Alexandria, Virginia 22313-1450
www.uspto.gov

APPLICATION NO.	FILING DATE	FIRST NAMED INVENTOR	ATTORNEY DOCKET NO.	CONFIRMATION NO.
12/895,610	09/30/2010	Mathew A. McPherson	M55.2P-14675-US02	8071

490 7590 02/05/2014
VIDAS, ARRETT & STEINKRAUS, P.A.
Richard A. Arrett
SUITE 400, 6640 SHADY OAK ROAD
6640 Shady Oak Rd.
EDEN PRAIRIE, MN 55344

EXAMINER
SIMMS JR, JOHN ELLIOTT

ART UNIT	PAPER NUMBER
3711	

DATE MAILED: 02/05/2014

Determination of Patent Term Adjustment under 35 U.S.C. 154 (b)
(application filed on or after May 29, 2000)

The Patent Term Adjustment to date is 328 day(s). If the issue fee is paid on the date that is three months after the mailing date of this notice and the patent issues on the Tuesday before the date that is 28 weeks (six and a half months) after the mailing date of this notice, the Patent Term Adjustment will be 328 day(s).

If a Continued Prosecution Application (CPA) was filed in the above-identified application, the filing date that determines Patent Term Adjustment is the filing date of the most recent CPA.

Applicant will be able to obtain more detailed information by accessing the Patent Application Information Retrieval (PAIR) WEB site (http://pair.uspto.gov).

Any questions regarding the Patent Term Extension or Adjustment determination should be directed to the Office of Patent Legal Administration at (571)-272-7702. Questions relating to issue and publication fee payments should be directed to the Customer Service Center of the Office of Patent Publication at 1-(888)-786-0101 or (571)-272-4200.

OMB Clearance and PRA Burden Statement for PTOL-85 Part B

The Paperwork Reduction Act (PRA) of 1995 requires Federal agencies to obtain Office of Management and Budget approval before requesting most types of information from the public. When OMB approves an agency request to collect information from the public, OMB (i) provides a valid OMB Control Number and expiration date for the agency to display on the instrument that will be used to collect the information and (ii) requires the agency to inform the public about the OMB Control Number's legal significance in accordance with 5 CFR 1320.5(b).

The information collected by PTOL-85 Part B is required by 37 CFR 1.311. The information is required to obtain or retain a benefit by the public which is to file (and by the USPTO to process) an application. Confidentiality is governed by 35 U.S.C. 122 and 37 CFR 1.14. This collection is estimated to take 12 minutes to complete, including gathering, preparing, and submitting the completed application form to the USPTO. Time will vary depending upon the individual case. Any comments on the amount of time you require to complete this form and/or suggestions for reducing this burden, should be sent to the Chief Information Officer, U.S. Patent and Trademark Office, U.S. Department of Commerce, P.O. Box 1450, Alexandria, Virginia 22313-1450. DO NOT SEND FEES OR COMPLETED FORMS TO THIS ADDRESS. SEND TO: Commissioner for Patents, P.O. Box 1450, Alexandria, Virginia 22313-1450. Under the Paperwork Reduction Act of 1995, no persons are required to respond to a collection of information unless it displays a valid OMB control number.

Privacy Act Statement

The Privacy Act of 1974 (P.L. 93-579) requires that you be given certain information in connection with your submission of the attached form related to a patent application or patent. Accordingly, pursuant to the requirements of the Act, please be advised that: (1) the general authority for the collection of this information is 35 U.S.C. 2(b)(2); (2) furnishing of the information solicited is voluntary; and (3) the principal purpose for which the information is used by the U.S. Patent and Trademark Office is to process and/or examine your submission related to a patent application or patent. If you do not furnish the requested information, the U.S. Patent and Trademark Office may not be able to process and/or examine your submission, which may result in termination of proceedings or abandonment of the application or expiration of the patent.

The information provided by you in this form will be subject to the following routine uses:

1. The information on this form will be treated confidentially to the extent allowed under the Freedom of Information Act (5 U.S.C. 552) and the Privacy Act (5 U.S.C 552a). Records from this system of records may be disclosed to the Department of Justice to determine whether disclosure of these records is required by the Freedom of Information Act.
2. A record from this system of records may be disclosed, as a routine use, in the course of presenting evidence to a court, magistrate, or administrative tribunal, including disclosures to opposing counsel in the course of settlement negotiations.
3. A record in this system of records may be disclosed, as a routine use, to a Member of Congress submitting a request involving an individual, to whom the record pertains, when the individual has requested assistance from the Member with respect to the subject matter of the record.
4. A record in this system of records may be disclosed, as a routine use, to a contractor of the Agency having need for the information in order to perform a contract. Recipients of information shall be required to comply with the requirements of the Privacy Act of 1974, as amended, pursuant to 5 U.S.C. 552a(m).
5. A record related to an International Application filed under the Patent Cooperation Treaty in this system of records may be disclosed, as a routine use, to the International Bureau of the World Intellectual Property Organization, pursuant to the Patent Cooperation Treaty.
6. A record in this system of records may be disclosed, as a routine use, to another federal agency for purposes of National Security review (35 U.S.C. 181) and for review pursuant to the Atomic Energy Act (42 U.S.C. 218(c)).
7. A record from this system of records may be disclosed, as a routine use, to the Administrator, General Services, or his/her designee, during an inspection of records conducted by GSA as part of that agency's responsibility to recommend improvements in records management practices and programs, under authority of 44 U.S.C. 2904 and 2906. Such disclosure shall be made in accordance with the GSA regulations governing inspection of records for this purpose, and any other relevant (i.e., GSA or Commerce) directive. Such disclosure shall not be used to make determinations about individuals.
8. A record from this system of records may be disclosed, as a routine use, to the public after either publication of the application pursuant to 35 U.S.C. 122(b) or issuance of a patent pursuant to 35 U.S.C. 151. Further, a record may be disclosed, subject to the limitations of 37 CFR 1.14, as a routine use, to the public if the record was filed in an application which became abandoned or in which the proceedings were terminated and which application is referenced by either a published application, an application open to public inspection or an issued patent.
9. A record from this system of records may be disclosed, as a routine use, to a Federal, State, or local law enforcement agency, if the USPTO becomes aware of a violation or potential violation of law or regulation.

Notice of Allowability	Application No. 12/895,610	Applicant(s) MCPHERSON, MATHEW A.	
	Examiner JOHN E. SIMMS JR	Art Unit 3711	AIA (First Inventor to File) Status No

-- The MAILING DATE of this communication appears on the cover sheet with the correspondence address--

All claims being allowable, PROSECUTION ON THE MERITS IS (OR REMAINS) CLOSED in this application. If not included herewith (or previously mailed), a Notice of Allowance (PTOL-85) or other appropriate communication will be mailed in due course. **THIS NOTICE OF ALLOWABILITY IS NOT A GRANT OF PATENT RIGHTS.** This application is subject to withdrawal from issue at the initiative of the Office or upon petition by the applicant. See 37 CFR 1.313 and MPEP 1308.

1. ☒ This communication is responsive to *20 December 2013*.
   ☐ A declaration(s)/affidavit(s) under **37 CFR 1.130(b)** was/were filed on_____.
2. ☐ An election was made by the applicant in response to a restriction requirement set forth during the interview on _____; the restriction requirement and election have been incorporated into this action.
3. ☒ The allowed claim(s) is/are *2-11 and 13-21*. As a result of the allowed claim(s), you may be eligible to benefit from the **Patent Prosecution Highway** program at a participating intellectual property office for the corresponding application. For more information, please see http://www.uspto.gov/patents/init_events/pph/index.jsp or send an inquiry to PPHfeedback@uspto.gov.
4. ☐ Acknowledgment is made of a claim for foreign priority under 35 U.S.C. § 119(a)-(d) or (f).

   Certified copies:

   a) ☐ All b) ☐ Some *c) ☐ None of the:
   1. ☐ Certified copies of the priority documents have been received.
   2. ☐ Certified copies of the priority documents have been received in Application No. _____ .
   3. ☐ Copies of the certified copies of the priority documents have been received in this national stage application from the International Bureau (PCT Rule 17.2(a)).

   * Certified copies not received: _____.

Applicant has THREE MONTHS FROM THE "MAILING DATE" of this communication to file a reply complying with the requirements noted below. Failure to timely comply will result in ABANDONMENT of this application.
THIS THREE-MONTH PERIOD IS NOT EXTENDABLE.

5. ☐ CORRECTED DRAWINGS (as "replacement sheets") must be submitted.
   ☐ including changes required by the attached Examiner's Amendment / Comment or in the Office action of Paper No./Mail Date _____.

   Identifying indicia such as the application number (see 37 CFR 1.84(c)) should be written on the drawings in the front (not the back) of each sheet. Replacement sheet(s) should be labeled as such in the header according to 37 CFR 1.121(d).
6. ☐ DEPOSIT OF and/or INFORMATION about the deposit of BIOLOGICAL MATERIAL must be submitted. Note the attached Examiner's comment regarding REQUIREMENT FOR THE DEPOSIT OF BIOLOGICAL MATERIAL.

Attachment(s)

1. ☐ Notice of References Cited (PTO-892)
2. ☐ Information Disclosure Statements (PTO/SB/08), Paper No./Mail Date _____
3. ☐ Examiner's Comment Regarding Requirement for Deposit of Biological Material
4. ☐ Interview Summary (PTO-413), Paper No./Mail Date _____ .
5. ☐ Examiner's Amendment/Comment
6. ☒ Examiner's Statement of Reasons for Allowance
7. ☐ Other _____.

/JOHN E SIMMS JR/
Examiner, Art Unit 3711

IPR2024-00523
Ravin EX1014 Page 40

REASONS FOR ALLOWANCE

1. The present application is being examined under the pre-AIA first to invent provisions.

2. The following is an examiner's statement of reasons for allowance: the prior art does not teach an archery bow having a rotatable member with a cam track, a capstan and a terminal, wherein a power cable wraps around the capstan and is attached to the terminal, such that, in the brace condition, a straight portion of the power cable defines a plane wherein the axle, on which the rotatable member rotates, and the terminal are on opposite sides of the plane.

Any comments considered necessary by applicant must be submitted no later than the payment of the issue fee and, to avoid processing delays, should preferably accompany the issue fee. Such submissions should be clearly labeled "Comments on Statement of Reasons for Allowance."

Any inquiry concerning this communication or earlier communications from the examiner should be directed to JOHN E. SIMMS JR whose telephone number is (571)270-7474. The examiner can normally be reached on M-F 8:30 a.m. - 5:00 p.m..

If attempts to reach the examiner by telephone are unsuccessful, the examiner's supervisor, Eugene Kim can be reached on (571) 272-4463. The fax phone number for the organization where this application or proceeding is assigned is 571-273-8300.

Information regarding the status of an application may be obtained from the Patent Application Information Retrieval (PAIR) system. Status information for published applications may be obtained from either Private PAIR or Public PAIR. Status information for unpublished applications is available through Private PAIR only. For more information about the PAIR system, see http://pair-direct.uspto.gov. Should you have questions on access to the Private PAIR system, contact the Electronic Business Center (EBC) at 866-217-9197 (toll-free). If you would like assistance from a USPTO Customer Service Representative or access to the automated information system, call 800-786-9199 (IN USA OR CANADA) or 571-272-1000.

/JOHN E SIMMS JR/
Examiner, Art Unit 3711
13 January 2014

/GENE KIM/

Supervisory Patent Examiner, Art Unit 3711

PTO/SB/35 (07-09)
Approved for use through 07/31/2012. OMB 0651-0031
U.S. Patent and Trademark Office; U. S. DEPARTMENT OF COMMERCE
Under the Paperwork Reduction Act of 1995, no persons are required to respond to a collection of information unless it displays a valid OMB control number.

NONPUBLICATION REQUEST UNDER 35 U.S.C. 122(b)(2)(B)(i)

First Named Inventor	Mathew A. McPherson
Title	Archery Bow Cam
Attorney Docket Number	M55.2-14675-US02

I hereby certify that the invention disclosed in the attached application **has not and will not be** the subject of an application filed in another country, or under a multilateral international agreement, that requires publication at eighteen months after filing.

I hereby request that the attached application not be published under 35 U.S.C. 122(b).

/Jeremy G Laabs/	2010-09-30
Signature	Date
Jeremy G. Laabs	53170
Typed or printed name	Registration Number, if applicable
952-563-3000	
Telephone Number	

This request must be signed in compliance with 37 CFR 1.33(b) and submitted with the application **upon filing.**

Applicant may rescind this nonpublication request at any time. If applicant rescinds a request that an application not be published under 35 U.S.C. 122(b), the application will be scheduled for publication at eighteen months from the earliest claimed filing date for which a benefit is claimed.

If applicant subsequently files an application directed to the invention disclosed in the attached application in another country, or under a multilateral international agreement, that requires publication of applications eighteen months after filing, the applicant **must** notify the United States Patent and Trademark Office of such filing within forty-five (45) days after the date of the filing of such foreign or international application. **Failure to do so will result in abandonment of this application (35 U.S.C. 122(b)(2)(B)(iii)).**

This collection of information is required by 37 CFR 1.213(a). The information is required to obtain or retain a benefit by the public which is to file (and by the USPTO to process) an application. Confidentiality is governed by 35 U.S.C. 122 and 37 CFR 1.11 and 1.14. This collection is estimated to take 6 minutes to complete, including gathering, preparing, and submitting the completed application form to the USPTO. Time will vary depending upon the individual case. Any comments on the amount of time you require to complete this form and/or suggestions for reducing this burden, should be sent to the Chief Information Officer, U.S. Patent and Trademark Office, U.S. Department of Commerce, P.O. Box 1450, Alexandria, VA 22313-1450. DO NOT SEND FEES OR COMPLETED FORMS TO THIS ADDRESS. **SEND TO: Commissioner for Patents, P.O. Box 1450, Alexandria, VA 22313-1450.**

If you need assistance in completing the form, call 1-800-PTO-9199 (1-800-786-9199) and select option 2.

Privacy Act Statement

The **Privacy Act of 1974 (P.L. 93-579)** requires that you be given certain information in connection with your submission of the attached form related to a patent application or patent. Accordingly, pursuant to the requirements of the Act, please be advised that: (1) the general authority for the collection of this information is 35 U.S.C. 2(b)(2); (2) furnishing of the information solicited is voluntary; and (3) the principal purpose for which the information is used by the U.S. Patent and Trademark Office is to process and/or examine your submission related to a patent application or patent. If you do not furnish the requested information, the U.S. Patent and Trademark Office may not be able to process and/or examine your submission, which may result in termination of proceedings or abandonment of the application or expiration of the patent.

The information provided by you in this form will be subject to the following routine uses:

1. The information on this form will be treated confidentially to the extent allowed under the Freedom of Information Act (5 U.S.C. 552) and the Privacy Act (5 U.S.C 552a). Records from this system of records may be disclosed to the Department of Justice to determine whether disclosure of these records is required by the Freedom of Information Act.
2. A record from this system of records may be disclosed, as a routine use, in the course of presenting evidence to a court, magistrate, or administrative tribunal, including disclosures to opposing counsel in the course of settlement negotiations.
3. A record in this system of records may be disclosed, as a routine use, to a Member of Congress submitting a request involving an individual, to whom the record pertains, when the individual has requested assistance from the Member with respect to the subject matter of the record.
4. A record in this system of records may be disclosed, as a routine use, to a contractor of the Agency having need for the information in order to perform a contract. Recipients of information shall be required to comply with the requirements of the Privacy Act of 1974, as amended, pursuant to 5 U.S.C. 552a(m).
5. A record related to an International Application filed under the Patent Cooperation Treaty in this system of records may be disclosed, as a routine use, to the International Bureau of the World Intellectual Property Organization, pursuant to the Patent Cooperation Treaty.
6. A record in this system of records may be disclosed, as a routine use, to another federal agency for purposes of National Security review (35 U.S.C. 181) and for review pursuant to the Atomic Energy Act (42 U.S.C. 218(c)).
7. A record from this system of records may be disclosed, as a routine use, to the Administrator, General Services, or his/her designee, during an inspection of records conducted by GSA as part of that agency's responsibility to recommend improvements in records management practices and programs, under authority of 44 U.S.C. 2904 and 2906. Such disclosure shall be made in accordance with the GSA regulations governing inspection of records for this purpose, and any other relevant (*i.e.*, GSA or Commerce) directive. Such disclosure shall not be used to make determinations about individuals.
8. A record from this system of records may be disclosed, as a routine use, to the public after either publication of the application pursuant to 35 U.S.C. 122(b) or issuance of a patent pursuant to 35 U.S.C. 151. Further, a record may be disclosed, subject to the limitations of 37 CFR 1.14, as a routine use, to the public if the record was filed in an application which became abandoned or in which the proceedings were terminated and which application is referenced by either a published application, an application open to public inspection or an issued patent.
9. A record from this system of records may be disclosed, as a routine use, to a Federal, State, or local law enforcement agency, if the USPTO becomes aware of a violation or potential violation of law or regulation.

UNITED STATES PATENT AND TRADEMARK OFFICE

UNITED STATES DEPARTMENT OF COMMERCE
United States Patent and Trademark Office
Address: COMMISSIONER FOR PATENTS
P.O. Box 1450
Alexandria, Virginia 22313-1450
www.uspto.gov

APPLICATION NO.	FILING DATE	FIRST NAMED INVENTOR	ATTORNEY DOCKET NO.	CONFIRMATION NO.
12/895,610	09/30/2010	Mathew A. McPherson	M55.2P-14675-US02	8071

490 7590 11/20/2013
VIDAS, ARRETT & STEINKRAUS, P.A.
Richard A. Arrett
SUITE 400, 6640 SHADY OAK ROAD
6640 Shady Oak Rd.
EDEN PRAIRIE, MN 55344

EXAMINER
SIMMS JR, JOHN ELLIOTT

ART UNIT	PAPER NUMBER
3711	

NOTIFICATION DATE	DELIVERY MODE
11/20/2013	ELECTRONIC

Please find below and/or attached an Office communication concerning this application or proceeding.

The time period for reply, if any, is set in the attached communication.

Notice of the Office communication was sent electronically on above-indicated "Notification Date" to the following e-mail address(es):

mail@vaslaw.com
rleaf@vaslaw.com
rarrett@vaslaw.com

Office Action Summary	Application No. 12/895,610	Applicant(s) MCPHERSON, MATHEW A.	
	Examiner JOHN E. SIMMS JR	Art Unit 3711	AIA (First Inventor to File) Status No

-- The MAILING DATE of this communication appears on the cover sheet with the correspondence address --

Period for Reply

A SHORTENED STATUTORY PERIOD FOR REPLY IS SET TO EXPIRE 3 MONTH(S) OR THIRTY (30) DAYS, WHICHEVER IS LONGER, FROM THE MAILING DATE OF THIS COMMUNICATION.

- Extensions of time may be available under the provisions of 37 CFR 1.136(a). In no event, however, may a reply be timely filed after SIX (6) MONTHS from the mailing date of this communication.
- If NO period for reply is specified above, the maximum statutory period will apply and will expire SIX (6) MONTHS from the mailing date of this communication.
- Failure to reply within the set or extended period for reply will, by statute, cause the application to become ABANDONED (35 U.S.C. § 133). Any reply received by the Office later than three months after the mailing date of this communication, even if timely filed, may reduce any earned patent term adjustment. See 37 CFR 1.704(b).

Status

1)☒ Responsive to communication(s) filed on *1 July 2013*.

☐ A declaration(s)/affidavit(s) under **37 CFR 1.130(b)** was/were filed on _____.

2a)☐ This action is **FINAL**. 2b)☒ This action is non-final.

3)☐ An election was made by the applicant in response to a restriction requirement set forth during the interview on _____; the restriction requirement and election have been incorporated into this action.

4)☐ Since this application is in condition for allowance except for formal matters, prosecution as to the merits is closed in accordance with the practice under *Ex parte Quayle*, 1935 C.D. 11, 453 O.G. 213.

Disposition of Claims

5)☒ Claim(s) *1-21* is/are pending in the application.

5a) Of the above claim(s) _____ is/are withdrawn from consideration.

6)☐ Claim(s) _____ is/are allowed.

7)☒ Claim(s) *1,5-13,16 and 18-20* is/are rejected.

8)☒ Claim(s) *2-4, 14, 15, 17, and 21* is/are objected to.

9)☐ Claim(s) _____ are subject to restriction and/or election requirement.

* If any claims have been determined allowable, you may be eligible to benefit from the **Patent Prosecution Highway** program at a participating intellectual property office for the corresponding application. For more information, please see http://www.uspto.gov/patents/init_events/pph/index.jsp or send an inquiry to PPHfeedback@uspto.gov.

Application Papers

10)☐ The specification is objected to by the Examiner.

11)☐ The drawing(s) filed on _____ is/are: a)☐ accepted or b)☐ objected to by the Examiner.

Applicant may not request that any objection to the drawing(s) be held in abeyance. See 37 CFR 1.85(a).

Replacement drawing sheet(s) including the correction is required if the drawing(s) is objected to. See 37 CFR 1.121(d).

Priority under 35 U.S.C. § 119

12)☐ Acknowledgment is made of a claim for foreign priority under 35 U.S.C. § 119(a)-(d) or (f).

Certified copies:

a)☐ All b)☐ Some * c)☐ None of the:

1.☐ Certified copies of the priority documents have been received.

2.☐ Certified copies of the priority documents have been received in Application No. _____.

3.☐ Copies of the certified copies of the priority documents have been received in this National Stage application from the International Bureau (PCT Rule 17.2(a)).

* See the attached detailed Office action for a list of the certified copies not received.

Attachment(s)

1) ☐ Notice of References Cited (PTO-892)

2) ☐ Information Disclosure Statement(s) (PTO/SB/08) Paper No(s)/Mail Date _____.

3) ☐ Interview Summary (PTO-413) Paper No(s)/Mail Date. _____ .

4) ☐ Other: _____.

IPR2024-00523
Ravin EX1014 Page 46

DETAILED ACTION

1. The present application is being examined under the pre-AIA first to invent provisions.

Claim Rejections - 35 USC § 103

2. The following is a quotation of 35 U.S.C. 103(a) which forms the basis for all obviousness rejections set forth in this Office action:

> (a) A patent may not be obtained though the invention is not identically disclosed or described as set forth in section 102 of this title, if the differences between the subject matter sought to be patented and the prior art are such that the subject matter as a whole would have been obvious at the time the invention was made to a person having ordinary skill in the art to which said subject matter pertains. Patentability shall not be negatived by the manner in which the invention was made.

3. Claims 1, 5-13, and 16-20 are rejected under 35 U.S.C. 103(a) as being unpatentable over Simonds, U.S. Patent No. 4,438,753, in view of Darlington, U.S. Patent No. 6,516,790. As to Claim 1, Simonds teaches an archery bow (1) having a brace condition, see Figure 3, and a drawn condition, see Figure 5, and comprising a riser (2), first and second limbs (3,4) supported by the riser (2), and a first and second rotatable members (7) supported by the first limb (3), on a first axle (10), and by the second limb (4) on a second axle (10), Col. 3, ln. 40-60. The first rotatable member (7) comprises a drawstring track/cam track (14), a capstan (41) , and a terminal (50), and a drawstring (32), extending between the first and second rotatable members (7), Col. 4, ln. 4-5, ln. 23-26, Col. 5, ln. 65-69, and Col. 6, ln. 54-59. Simonds teaches a power cable (33) attached at the terminal (50) and extending toward the second limb (4), Col. 5, ln. 8-20, the power cable (33) comprising an elongate straight portion located near the first rotatable member (7), a capstan portion in contact with the capstan (41), and a terminal portion in contact with the terminal (50). In the brace condition, the power cable (33) wraps around the capstan (41) in a first rotational direction as the power cable (33) is traversed from the elongate straight portion to

the terminal portion, see drawing below; and when the bow is drawn from the brace condition, the first rotatable member (7) rotates in a second direction that is opposite the first rotational direction, see drawing below and Figure 5. Simonds teaches an integral power cable and drawstring, Col. 5, ln. 8-11, which share a drawstring track/cam track (14) and Simonds does not teach a cam track in a plane offset from a plane of a drawstring track. Darlington teaches a separate drawstring (BSC) and power cable (PC) with a drawstring oriented in a first cam plane having a drawstring track and with a cam track oriented in a second cam plane offset from the first cam plane, see Figures 2 and 3. It would have been obvious to one of ordinary skill in the art, at the time of the invention, to provide Simonds with separate drawstring and power cable with the drawstring in the drawstring track and the power cable in the cam track, as taught by Darlington, to provide Simonds with separate drawstring and power cable on separate tracks, to yield the predictable result of facilitating the design of separate rotational radii for each track with respect to the axis.

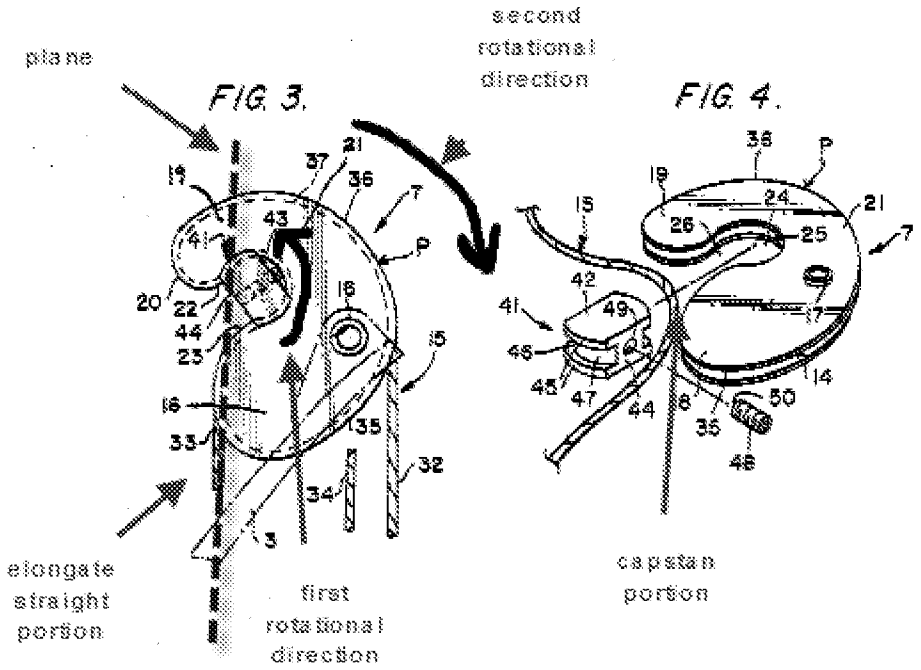

4.

5. As to Claim 5, Simonds, as modified, teaches a distance between the first axle (10) and the terminal being greater than the distance between the first axle and the cam track (14), see drawing above. The terminal, located at the point where the tip (50) of the set screw fixes the cable to the rotatable member (7), is further from the axle than the cam track (14) running from the cam periphery (23). As to Claims 6-9, Darlington teaches a portion of a cam track comprising a module (62) attached to a first rotatable member (60), Col. 4, ln. 30-33, the module (62) is adjustable between a plurality of orientations with respect to the rotatable member (60), Col. 5, ln. 15-24, the orientations being rotational orientations about the first axle (82), Col. 5, ln. 16-17, and the module (62) is interchangeable with a second module having a different shape, Col. 5, ln. 29-34. It would have been obvious to one of ordinary skill in the art, at the time of the invention, to provide Simonds, as modified, with a rotatable and interchangeable module, as

taught by Darlington, to provide Simonds with variable adjustment capability to yield the predictable result of facilitating the customization of the bow performance characteristics, as needed. As to Claims 10 and 11, Simonds teaches a second power cable (34) and a cam (7), on the second limb (40) having the same features as the cam (7) described above, and the second power cable (34) extending toward the first limb (3), Col. 3, ln. 44-49 and Col. 5, ln. 17-21. Simonds and Darlington are further applied as in Claim 1 with the second appearance of each named element being a counterpart of the first and the second rotatable member being a mirror image of the first rotatable member. The same obviousness rationale applies for incorporating the teaching of Darlington with that of Simonds. As to Claims 12 and 13, Simonds and Darlington are applied as in Claim 1. Further, Simonds teaches an axle plane defined by first and second axles (10), see Figure 2, and an exit location defined where the drawstring exits the first rotatable member, see Figure 3. In brace condition, the axle plane divides the first rotatable member (7) to a first part and a second part, the capstan (41) and the terminal (at 19) located in the first part, the drawstring exit location located in the second part, and the distance between the terminal and the axle plane is greater than the distance between the capstan and the axle plane, measured along a line orthogonal to the axle plane see drawing below. As to Claims 16 and 18, Simonds and Darlington are applied as in claims 1, 5, and 6. As to Claim 19, Simonds and Darlington are applied as in Claim 10. Further, Simonds teaches the drawstring extending from the second rotatable member (7) at a second exit location, see Figure 2, and the axle plane divides the second rotatable member into first and second parts appearing as a reversed mirror image of the drawing below, with features in the respective parts, as claimed, see Figure 2

depicting the second rotatable member (7) at the lower end of second limb (4). As to Claim 20, Simonds and Darlington are applied as in Claim 11.

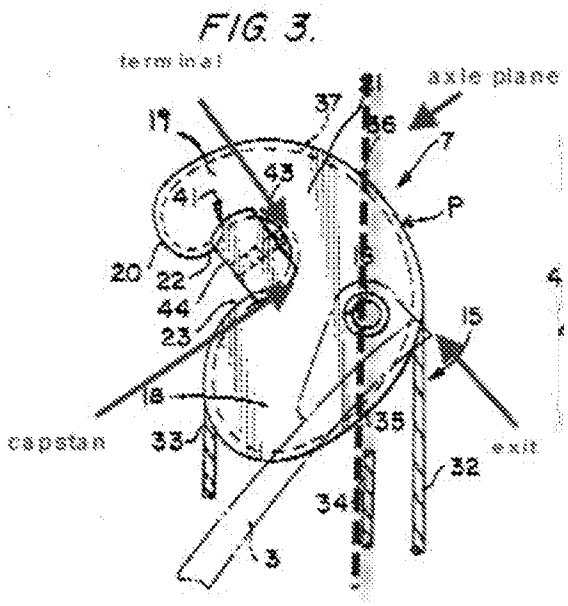

6.

Allowable Subject Matter

7. Claims 2-4, 14, 15, 17, and 21 are objected to as being dependent upon a rejected base claim, but would be allowable if rewritten in independent form including all of the limitations of the base claim and any intervening claims.

Response to Arguments

8. Applicant's arguments filed 29 May 2013 have been reconsidered but they are not fully persuasive.

9. Applicant’s argument that the set screw (48), of Simonds, defines a terminal is found to be persuasive.

10. In response to applicant's argument that combining the teaching of Darlington with that of Simonds would result if a configuration of parts not meeting the claims, the test for obviousness is not whether the features of a secondary reference may be bodily incorporated into the structure of the primary reference; nor is it that the claimed invention must be expressly suggested in any one or all of the references. Rather, the test is what the combined teachings of the references would have suggested to those of ordinary skill in the art. See *In re Keller*, 642 F.2d 413, 208 USPQ 871 (CCPA 1981). Applicant argues that incorporating the first and second cam planes, of Darlington, into the rotatable member of Simonds would not prompt one of ordinary skill to produce a bow so as to meet the claim limitations. The combination of the teachings of Simonds and Darlington is not limited to the specific configuration as contemplated by the applicant. The examiner maintains the position that one of ordinary skill in the art would have had the capability of modifying Simonds design with two cam planes, based on the teaching of Darlington.

Conclusion

Any inquiry concerning this communication or earlier communications from the examiner should be directed to JOHN E. SIMMS JR whose telephone number is (571)270-7474. The examiner can normally be reached on M-F 8:30 a.m. - 5:00 p.m..

If attempts to reach the examiner by telephone are unsuccessful, the examiner's supervisor, Eugene Kim can be reached on (571) 272-4463. The fax phone number for the organization where this application or proceeding is assigned is 571-273-8300.

Information regarding the status of an application may be obtained from the Patent Application Information Retrieval (PAIR) system. Status information for published applications may be obtained from either Private PAIR or Public PAIR. Status information for unpublished applications is available through Private PAIR only. For more information about the PAIR system, see http://pair-direct.uspto.gov. Should you have questions on access to the Private PAIR system, contact the Electronic Business Center (EBC) at 866-217-9197 (toll-free). If you would like assistance from a USPTO Customer Service Representative or access to the automated information system, call 800-786-9199 (IN USA OR CANADA) or 571-272-1000.

/JOHN E SIMMS JR/
Examiner, Art Unit 3711
8 November 2013
/Gene Kim/
Supervisory Patent Examiner, Art Unit 3711

UNITED STATES PATENT AND TRADEMARK OFFICE

UNITED STATES DEPARTMENT OF COMMERCE
United States Patent and Trademark Office
Address: COMMISSIONER FOR PATENTS
P.O. Box 1450
Alexandria, Virginia 22313-1450
www.uspto.gov

APPLICATION NO.	FILING DATE	FIRST NAMED INVENTOR	ATTORNEY DOCKET NO.	CONFIRMATION NO.
12/895,610	09/30/2010	Mathew A. McPherson	M55.2P-14675-US02	8071

490 7590 11/02/2012
VIDAS, ARRETT & STEINKRAUS, P.A.
Richard A. Arrett
SUITE 400, 6640 SHADY OAK ROAD
6640 Shady Oak Rd.
EDEN PRAIRIE, MN 55344

EXAMINER
SIMMS JR, JOHN ELLIOTT

ART UNIT	PAPER NUMBER
3711	

NOTIFICATION DATE	DELIVERY MODE
11/02/2012	ELECTRONIC

Please find below and/or attached an Office communication concerning this application or proceeding.

The time period for reply, if any, is set in the attached communication.

Notice of the Office communication was sent electronically on above-indicated "Notification Date" to the following e-mail address(es):

mail@vaslaw.com
rleaf@vaslaw.com
rarrett@vaslaw.com

Office Action Summary	Application No.	Applicant(s)	
	12/895,610	MCPHERSON, MATHEW A.	
	Examiner	Art Unit	
	JOHN E. SIMMS JR	3711	

-- The MAILING DATE of this communication appears on the cover sheet with the correspondence address --

Period for Reply

A SHORTENED STATUTORY PERIOD FOR REPLY IS SET TO EXPIRE 3 MONTH(S) OR THIRTY (30) DAYS, WHICHEVER IS LONGER, FROM THE MAILING DATE OF THIS COMMUNICATION.

- Extensions of time may be available under the provisions of 37 CFR 1.136(a). In no event, however, may a reply be timely filed after SIX (6) MONTHS from the mailing date of this communication.
- If NO period for reply is specified above, the maximum statutory period will apply and will expire SIX (6) MONTHS from the mailing date of this communication.
- Failure to reply within the set or extended period for reply will, by statute, cause the application to become ABANDONED (35 U.S.C. § 133). Any reply received by the Office later than three months after the mailing date of this communication, even if timely filed, may reduce any earned patent term adjustment. See 37 CFR 1.704(b).

Status

1)☒ Responsive to communication(s) filed on *30 September 2010*.

2a)☐ This action is **FINAL**. 2b)☒ This action is non-final.

3)☐ An election was made by the applicant in response to a restriction requirement set forth during the interview on _____; the restriction requirement and election have been incorporated into this action.

4)☐ Since this application is in condition for allowance except for formal matters, prosecution as to the merits is closed in accordance with the practice under *Ex parte Quayle*, 1935 C.D. 11, 453 O.G. 213.

Disposition of Claims

5)☒ Claim(s) *1-20* is/are pending in the application.

5a) Of the above claim(s) _____ is/are withdrawn from consideration.

6)☐ Claim(s) _____ is/are allowed.

7)☒ Claim(s) *1-20* is/are rejected.

8)☐ Claim(s) _____ is/are objected to.

9)☐ Claim(s) _____ are subject to restriction and/or election requirement.

Application Papers

10)☐ The specification is objected to by the Examiner.

11)☒ The drawing(s) filed on *30 September 2010* is/are: a)☒ accepted or b)☐ objected to by the Examiner.

Applicant may not request that any objection to the drawing(s) be held in abeyance. See 37 CFR 1.85(a).

Replacement drawing sheet(s) including the correction is required if the drawing(s) is objected to. See 37 CFR 1.121(d).

12)☐ The oath or declaration is objected to by the Examiner. Note the attached Office Action or form PTO-152.

Priority under 35 U.S.C. § 119

13)☐ Acknowledgment is made of a claim for foreign priority under 35 U.S.C. § 119(a)-(d) or (f).

a)☐ All b)☐ Some * c)☐ None of:

1.☐ Certified copies of the priority documents have been received.

2.☐ Certified copies of the priority documents have been received in Application No. _____.

3.☐ Copies of the certified copies of the priority documents have been received in this National Stage application from the International Bureau (PCT Rule 17.2(a)).

* See the attached detailed Office action for a list of the certified copies not received.

Attachment(s)

1) ☒ Notice of References Cited (PTO-892)

2) ☐ Notice of Draftsperson's Patent Drawing Review (PTO-948)

3) ☒ Information Disclosure Statement(s) (PTO/SB/08) Paper No(s)/Mail Date *4 January 2011*.

4) ☐ Interview Summary (PTO-413) Paper No(s)/Mail Date. _____ .

5) ☐ Notice of Informal Patent Application

6) ☐ Other: _____.

DETAILED ACTION

Claim Rejections - 35 USC § 103

1. The following is a quotation of 35 U.S.C. 103(a) which forms the basis for all obviousness rejections set forth in this Office action:

> (a) A patent may not be obtained though the invention is not identically disclosed or described as set forth in section 102 of this title, if the differences between the subject matter sought to be patented and the prior art are such that the subject matter as a whole would have been obvious at the time the invention was made to a person having ordinary skill in the art to which said subject matter pertains. Patentability shall not be negatived by the manner in which the invention was made.

2. Claims 1-20 are rejected under 35 U.S.C. 103(a) as being unpatentable over Simonds, U.S. Patent No. 4,438,753, in view of Darlington, U.S. Patent No. 6,516,790. As to Claim 1, Simonds teaches an archery bow (1) having a brace condition, see Figure 3, and a drawn condition, see Figure 5, and comprising a riser (2), first and second limbs (3,4) supported by the riser (2), and a first and second rotatable members (7) supported by the first limb (3), on a first axle (10), and by the second limb (4) on a second axle (10), Col. 3, ln. 40-60. The first rotatable member (7) comprises a cam track (14), a capstan (41) , and a terminal section (19), and a drawstring (32), extending between the first and second rotatable members (7), Col. 4, ln. 4-5, ln. 23-26, and Col. 5, ln. 65-69. Simonds teaches a power cable (33) attached at the terminal area (19) and extending toward the second limb (4), Col. 5, ln. 8-20, the power cable (33) comprising an elongate straight portion located near the first rotatable member (7), a capstan portion in contact with the capstan (41), and a terminal portion in contact with the terminal area (19). In the brace condition, the power cable (33) wraps around the capstan (41) in a first rotational direction as the power cable (33) is traversed from the elongate straight portion to the terminal portion, see drawing below; and when the bow is drawn from the brace condition, the first rotatable member (7) rotates in a second direction that is opposite the first rotational

direction, see drawing below and Figure 5. Simonds teaches an integral power cable and bowstring, Col. 5, ln. 8-11; therefore, the terminal portion (19), of the power cable (33) does not include a terminal. Darlington teaches a separate bowstring (BSC) and power cable (PC) with a terminal (74) for the power cable (PC). It would have been obvious to one of ordinary skill in the art, at the time of the invention, to provide Simonds with separate bowstring and power cable and terminal, for the power cable, as taught by Darlington, to provide Simonds with separate bowstring and power cable with a terminal for the power cable in the terminal area, to yield the predictable result of securely and independently anchoring the power cable in the terminal area.

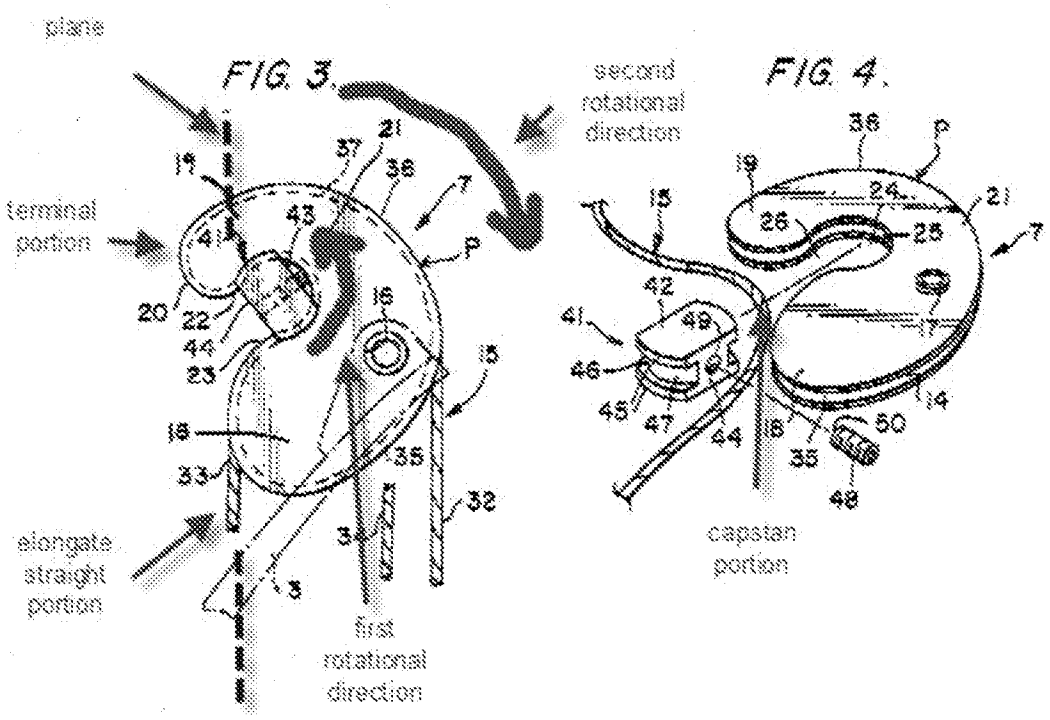

3. .....

4. As to Claim 2, Simonds, as modified, teaches the elongate straight portion of the power cable (33) defining a plane with the first axle and the terminal are located on opposite sides of the plane, see drawing above. As to Claim 3, Simonds, as modified, teaches that in the drawn

condition, the capstan (41) is located closer to the elongate straight portion than the terminal (at 19), see Figure 5. As to Claim 4, Darlington teaches a bow (30) having a brace condition, in which the power cable (PC) is secured to a terminal (74) aligned with the path of the cam track (71, 72) but not oriented in a cam track (71, 72), Col. 4, ln. 30-33, and see Figure 7. It would have been obvious to one of ordinary skill in the art at the time of the invention, to provide Simonds, as modified, with a power cable not oriented in a cam track, as taught by Darlington, to provide Simonds with a power cable not oriented in a portion of the cam track, when in brace condition, to yield the predictable result of limiting the bulk of the cam in the area proximate to the power cable, when in brace condition. In the event that doubt exists as to whether Darlington teaches the power cable not oriented in the cam track, the examiner finds that it would be obvious to one of ordinary skill in the art, at the time the invention was made, to arrange the terminal (74) as a location further to the right, on the rotatable member (60), as shown in Figure 7, to leave space between the power cable and the cam (62), since it has been held that rearranging parts of an invention involves only routing skill in the art, *In re Japikse*, 86 USPQ 70 (CCPA 1950). As to Claim 5, Simonds, as modified, teaches a distance between the first axle (10) and the terminal being greater than the distance between the first axle and the cam track (14), see drawing above. The terminal, located at the terminal portion is further from the axle than the cam track (14) running from the cam periphery (23). As to Claims 6-9, Darlington teaches a portion of a cam track comprising a module (62) attached to a first rotatable member (60), Col. 4, ln. 30-33, the module (62) is adjustable between a plurality of orientations with respect to the rotatable member (60), Col. 5, ln. 15-24, the orientations being rotational orientations about the first axle (82), Col. 5, ln. 16-17, and the module (62) is interchangeable

with a second module having a different shape, Col. 5, ln. 29-34. It would have been obvious to one of ordinary skill in the art, at the time of the invention, to provide Simonds, as modified, with a rotatable and interchangeable module, as taught by Darlington, to provide Simonds with variable adjustment capability to yield the predictable result of facilitating the customization of the bow performance characteristics, as needed. As to Claims 10 and 11, Simonds teaches a second power cable (34) and a cam (7), on the second limb (40) having the same features as the cam (7) described above, and the second power cable (34) extending toward the first limb (3), Col. 3, ln. 44-49 and Col. 5, ln. 17-21. Simonds and Darlington are further applied as in Claim 1 with the second appearance of each named element being a counterpart of the first and the second rotatable member being a mirror image of the first rotatable member. The same obviousness rationale applies for incorporating the teaching of Darlington with that of Simonds. As to Claims 12 and 13, Simonds and Darlington are applied as in Claim 1. Further, Simonds teaches an axle plane defined by first and second axles (10), see Figure 2, and an exit location defined where the drawstring exits the first rotatable member, see Figure 3. In brace condition, the axle plane divides the first rotatable member (7) to a first part and a second part, the capstan (41) and the terminal (at 19) located in the first part, the drawstring exit location located in the second part, and the distance between the terminal and the axle plane is greater than the distance between the capstan and the axle plane, measured along a line orthogonal to the axle plane see drawing below. As to Claim 14, Simonds and Darlington are applied as in Claim 2, with the cable portion plane being defined in place of the plane. As to Claims 15-18, Simonds and Darlington are applied as in claims 1, 3, 5, 4, and 6. As to Claim 19, Simonds and Darlington are applied as in Claim 10. Further, Simonds teaches the drawstring extending from the second

rotatable member (7) at a second exit location, see Figure 2, and the axle plane divides the second rotatable member into first and second parts appearing as a reversed mirror image of the drawing below, with features in the respective parts, as claimed, see Figure 2 depicting the second rotatable member (7) at the lower end of second limb (4). As to Claim 20, Simonds and Darlington are applied as in Claim 11.

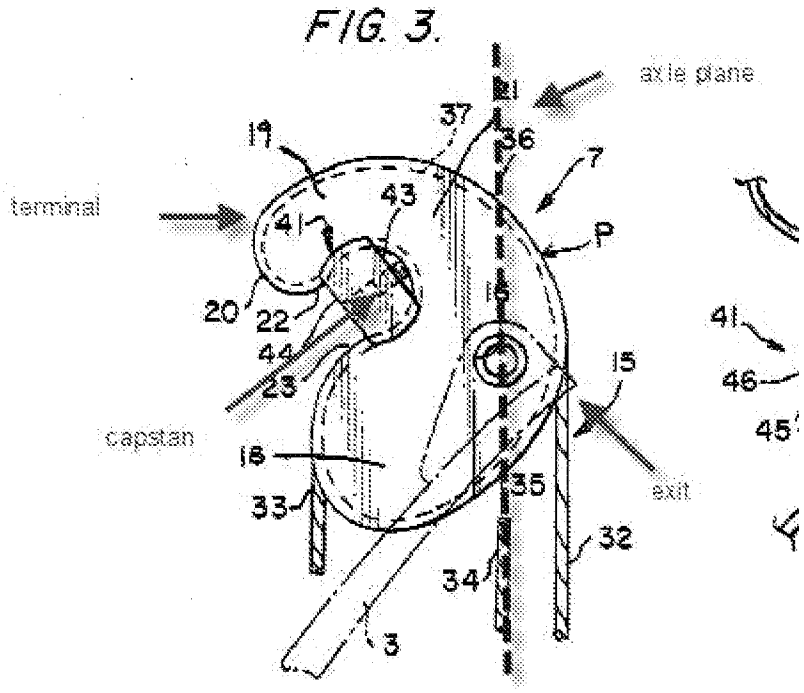

5.

Conclusion

Any inquiry concerning this communication or earlier communications from the examiner should be directed to JOHN E. SIMMS JR whose telephone number is (571)270-7474. The examiner can normally be reached on M-F 8:30 a.m. - 5:00 p.m..

If attempts to reach the examiner by telephone are unsuccessful, the examiner's supervisor, Eugene Kim can be reached on (571) 272-4463. The fax phone number for the organization where this application or proceeding is assigned is 571-273-8300.

Information regarding the status of an application may be obtained from the Patent Application Information Retrieval (PAIR) system. Status information for published applications may be obtained from either Private PAIR or Public PAIR. Status information for unpublished applications is available through Private PAIR only. For more information about the PAIR system, see http://pair-direct.uspto.gov. Should you have questions on access to the Private PAIR system, contact the Electronic Business Center (EBC) at 866-217-9197 (toll-free). If you would like assistance from a USPTO Customer Service Representative or access to the automated information system, call 800-786-9199 (IN USA OR CANADA) or 571-272-1000.

/JOHN E SIMMS JR/
Examiner, Art Unit 3711
26 October 2012
/Gene Kim/
Supervisory Patent Examiner, Art Unit 3711

Notice of References Cited	Application/Control No. 12/895,610	Applicant(s)/Patent Under Reexamination MCPHERSON, MATHEW A.	
	Examiner JOHN E. SIMMS JR	Art Unit 3711	Page 1 of 1

U.S. PATENT DOCUMENTS

*		Document Number Country Code-Number-Kind Code	Date MM-YYYY	Name	Classification
*	A	US-4,438,753	03-1984	Simonds, Gary	124/25.6
*	B	US-6,516,790	02-2003	Darlington, Rex F.	124/25.6
*	C	US-RE37,544	02-2002	Darlington, Rex F.	124/25.6
*	D	US-6,446,619	09-2002	McPherson, Mathew A.	124/25.6
*	E	US-6,990,970	01-2006	Darlington, Rex F.	124/25.6
*	F	US-RE39,880	10-2007	McPherson, Mathew	124/25.6
	G	US-			
	H	US-			
	I	US-			
	J	US-			
	K	US-			
	L	US-			
	M	US-			

FOREIGN PATENT DOCUMENTS

*		Document Number Country Code-Number-Kind Code	Date MM-YYYY	Country	Name	Classification
	N					
	O					
	P					
	Q					
	R					
	S					
	T					

NON-PATENT DOCUMENTS

*		Include as applicable: Author, Title Date, Publisher, Edition or Volume, Pertinent Pages)
	U	
	V	
	W	
	X	

*A copy of this reference is not being furnished with this Office action. (See MPEP § 707.05(a).)
Dates in MM-YYYY format are publication dates. Classifications may be US or foreign.

Doc code: IDS
Doc description: Information Disclosure Statement (IDS) Filed

PTO/SB/08a (01-10)
Approved for use through 07/31/2012. OMB 0651-0031
U.S. Patent and Trademark Office; U.S. DEPARTMENT OF COMMERCE
Under the Paperwork Reduction Act of 1995, no persons are required to respond to a collection of information unless it contains a valid OMB control number.

INFORMATION DISCLOSURE STATEMENT BY APPLICANT (**Not for submission under 37 CFR 1.99)**	Application Number	12895610
	Filing Date	2010-09-30
	First Named Inventor	Mathew A. McPherson
	Art Unit	3711
	Examiner Name	
	Attorney Docket Number	M55.2-14675-US02

U.S.PATENTS						Remove
Examiner Initial*	Cite No	Patent Number	Kind Code[1]	Issue Date	Name of Patentee or Applicant of cited Document	Pages,Columns,Lines where Relevant Passages or Relevant Figures Appear
	1	3486495		1969-12-30	Allen	
	2	4060066		1977-11-29	Kudlacek	
	3	4064862		1977-12-27	Groner	
	4	4461267		1984-07-24	Simonds et al.	
	5	4515142		1985-05-07	Nurney	
	6	4519374		1985-05-28	Miller	
	7	4739744		1988-04-26	Nurney	
	8	4774927		1988-10-04	Larson	

ALL REFERENCES CONSIDERED EXCEPT WHERE LINED THROUGH. /J.S./

Receipt date: 01/04/2011	Application Number	12895610 12895610 - GAU: 3711
INFORMATION DISCLOSURE STATEMENT BY APPLICANT (**Not for submission under 37 CFR 1.99)**	Filing Date	2010-09-30
	First Named Inventor	Mathew A. McPherson
	Art Unit	3711
	Examiner Name	
	Attorney Docket Number	M55.2-14675-US02

	9	4838236		1989-06-13	Kudlacek	
	10	4986250		1991-01-22	Darlington	
	11	5040520		1991-08-20	Nurney	
	12	5368006		1994-11-29	McPherson	
	13	5791322		1998-08-11	McPherson	
	14	5791323		1998-08-11	Dunlap	
	15	5960778		1999-10-05	Larson	
	16	5934265		1999-08-10	Darlington	
	17	6082347		2000-07-04	Darlington	
	18	6360735		2002-03-26	Larson et al.	
	19	RE37544		2002-02-12	Darlington	

ALL REFERENCES CONSIDERED EXCEPT WHERE LINED THROUGH. /J.S./

Receipt date: 01/04/2011	Application Number	12895610	12895610 - GAU: 3711
INFORMATION DISCLOSURE STATEMENT BY APPLICANT (**Not for submission under 37 CFR 1.99)**	Filing Date	2010-09-30	
	First Named Inventor	Mathew A. McPherson	
	Art Unit	3711	
	Examiner Name		
	Attorney Docket Number	M55.2-14675-US02	

	20	6446619		2002-09-10	McPherson	
	21	6516790		2003-02-11	Darlington	
	22	6691692		2004-02-17	Adkins	
	23	6871643		2005-03-29	Cooper et al.	
	24	7082937		2006-08-01	Land	
	25	7188615		2007-03-13	Chang	
	26	RE39880		2007-10-16	McPherson	
	27	7305979		2007-12-11	Yehle	

If you wish to add additional U.S. Patent citation information please click the Add button. Add

U.S.PATENT APPLICATION PUBLICATIONS Remove

Examiner Initial*	Cite No	Publication Number	Kind Code[1]	Publication Date	Name of Patentee or Applicant of cited Document	Pages,Columns,Lines where Relevant Passages or Relevant Figures Appear
	1	20100089375		2010-04-15	McPherson et al.	

If you wish to add additional U.S. Published Application citation information please click the Add button. Add

ALL REFERENCES CONSIDERED EXCEPT WHERE LINED THROUGH. /J.S./

Receipt date: 01/04/2011	Application Number	12895610 12895610 - GAU: 3711
INFORMATION DISCLOSURE STATEMENT BY APPLICANT (**Not for submission under 37 CFR 1.99)**	Filing Date	2010-09-30
	First Named Inventor	Mathew A. McPherson
	Art Unit	3711
	Examiner Name	
	Attorney Docket Number	M55.2-14675-US02

FOREIGN PATENT DOCUMENTS Remove

Examiner Initial*	Cite No	Foreign Document Number[3]	Country Code[2] ¡	Kind Code[4]	Publication Date	Name of Patentee or Applicant of cited Document	Pages,Columns,Lines where Relevant Passages or Relevant Figures Appear	T[5]
	1							☐

If you wish to add additional Foreign Patent Document citation information please click the Add button Add

NON-PATENT LITERATURE DOCUMENTS Remove

Examiner Initials*	Cite No	Include name of the author (in CAPITAL LETTERS), title of the article (when appropriate), title of the item (book, magazine, journal, serial, symposium, catalog, etc), date, pages(s), volume-issue number(s), publisher, city and/or country where published.	T[5]
	1	Priority Application No.: 61/247473; Filed: 2009-09-30; Inventor: McPherson.	☐

If you wish to add additional non-patent literature document citation information please click the Add button Add

EXAMINER SIGNATURE

Examiner Signature	/John Simms Jr/	Date Considered	10/26/2012

*EXAMINER: Initial if reference considered, whether or not citation is in conformance with MPEP 609. Draw line through a citation if not in conformance and not considered. Include copy of this form with next communication to applicant.

[1] See Kind Codes of USPTO Patent Documents at www.USPTO.GOV or MPEP 901.04. [2] Enter office that issued the document, by the two-letter code (WIPO Standard ST.3). [3] For Japanese patent documents, the indication of the year of the reign of the Emperor must precede the serial number of the patent document. [4] Kind of document by the appropriate symbols as indicated on the document under WIPO Standard ST.16 if possible. [5] Applicant is to place a check mark here if English language translation is attached.

ALL REFERENCES CONSIDERED EXCEPT WHERE LINED THROUGH. /J.S./

UNITED STATES PATENT AND TRADEMARK OFFICE

UNITED STATES DEPARTMENT OF COMMERCE
United States Patent and Trademark Office
Address: COMMISSIONER FOR PATENTS
P.O. Box 1450
Alexandria, Virginia 22313-1450
www.uspto.gov

APPLICATION NO.	ISSUE DATE	PATENT NO.	ATTORNEY DOCKET NO.	CONFIRMATION NO.
12/895,610	04/01/2014	8683989	M55.2P-14675-US02	8071

490 7590 03/12/2014
VIDAS, ARRETT & STEINKRAUS, P.A.
Richard A. Arrett
SUITE 400, 6640 SHADY OAK ROAD
6640 Shady Oak Rd.
EDEN PRAIRIE, MN 55344

ISSUE NOTIFICATION

The projected patent number and issue date are specified above.

Determination of Patent Term Adjustment under 35 U.S.C. 154 (b)
(application filed on or after May 29, 2000)

The Patent Term Adjustment is 328 day(s). Any patent to issue from the above-identified application will include an indication of the adjustment on the front page.

If a Continued Prosecution Application (CPA) was filed in the above-identified application, the filing date that determines Patent Term Adjustment is the filing date of the most recent CPA.

Applicant will be able to obtain more detailed information by accessing the Patent Application Information Retrieval (PAIR) WEB site (http://pair.uspto.gov).

Any questions regarding the Patent Term Extension or Adjustment determination should be directed to the Office of Patent Legal Administration at (571)-272-7702. Questions relating to issue and publication fee payments should be directed to the Application Assistance Unit (AAU) of the Office of Data Management (ODM) at (571)-272-4200.

APPLICANT(s) (Please see PAIR WEB site http://pair.uspto.gov for additional applicants):

Mathew A. McPherson, Norwalk, WI;

The United States represents the largest, most dynamic marketplace in the world and is an unparalleled location for business investment, innovation, and commercialization of new technologies. The USA offers tremendous resources and advantages for those who invest and manufacture goods here. Through SelectUSA, our nation works to encourage and facilitate business investment. To learn more about why the USA is the best country in the world to develop technology, manufacture products, and grow your business, visit SelectUSA.gov.

Issue Classification	Application/Control No.	Applicant(s)/Patent Under Reexamination
	12895610	MCPHERSON, MATHEW A.
	Examiner	**Art Unit**
	JOHN E SIMMS JR	3711

CPC						
Symbol					Type	Version
			/			
			/			
			/			
			/			
			/			
			/			
			/			
			/			
			/			
			/			
			/			
			/			
			/			
			/			

CPC Combination Sets							
Symbol					Type	Set	Ranking	Version
			/					
			/					

/JOHN E SIMMS JR/ Examiner.Art Unit 3711 (Assistant Examiner)	01/10/2014 (Date)	**Total Claims Allowed:** 19	
/GENE KIM/ Supervisory Patent Examiner.Art Unit 3711 (Primary Examiner)	01/28/2014 (Date)	O.G. Print Claim(s) 1	O.G. Print Figure 1

Issue Classification	Application/Control No.	Applicant(s)/Patent Under Reexamination
	12895610	MCPHERSON, MATHEW A.
	Examiner	**Art Unit**
	JOHN E SIMMS JR	3711

US ORIGINAL CLASSIFICATION		INTERNATIONAL CLASSIFICATION									
CLASS	SUBCLASS	CLAIMED					NON-CLAIMED				
124	25.6	F	4	1	B	7 / 00 (2006.01.01)					

CROSS REFERENCE(S)					
CLASS	SUBCLASS (ONE SUBCLASS PER BLOCK)				
124	900				

/JOHN E SIMMS JR/ Examiner.Art Unit 3711 (Assistant Examiner)	01/10/2014 (Date)	**Total Claims Allowed:** 19	
/GENE KIM/ Supervisory Patent Examiner.Art Unit 3711 (Primary Examiner)	01/28/2014 (Date)	O.G. Print Claim(s) 1	O.G. Print Figure 1

Issue Classification	Application/Control No.	Applicant(s)/Patent Under Reexamination
	12895610	MCPHERSON, MATHEW A.
	Examiner	**Art Unit**
	JOHN E SIMMS JR	3711

☐ Claims renumbered in the same order as presented by applicant ☐ CPA ☐ T.D. ☐ R.1.47

Final	Original	Final	Original	Final	Original	Final	Original	Final	Original	Final	Original	Final	Original	Final	Original
	1	15	17												
1	2	16	18												
11	3	17	19												
2	4	18	20												
3	5	10	21												
4	6														
5	7														
6	8														
7	9														
8	10														
9	11														
	12														
13	13														
12	14														
19	15														
14	16														

/JOHN E SIMMS JR/ Examiner.Art Unit 3711 (Assistant Examiner)	01/10/2014 (Date)	**Total Claims Allowed:** 19	
/GENE KIM/ Supervisory Patent Examiner.Art Unit 3711 (Primary Examiner)	01/28/2014 (Date)	O.G. Print Claim(s) 1	O.G. Print Figure 1

PART B - FEE(S) TRANSMITTAL

Complete and send this form, together with applicable fee(s), to: Mail **Mail Stop ISSUE FEE**
Commissioner for Patents
P.O. Box 1450
Alexandria, Virginia 22313-1450
or Fax (571)-273-2885

INSTRUCTIONS: This form should be used for transmitting the ISSUE FEE and PUBLICATION FEE (if required). Blocks 1 through 5 should be completed where appropriate. All further correspondence including the Patent, advance orders and notification of maintenance fees will be mailed to the current correspondence address as indicated unless corrected below or directed otherwise in Block 1, by (a) specifying a new correspondence address; and/or (b) indicating a separate "FEE ADDRESS" for maintenance fee notifications.

CURRENT CORRESPONDENCE ADDRESS (Note: Use Block 1 for any change of address)

490 7590 02/05/2014
VIDAS, ARRETT & STEINKRAUS, P.A.
Richard A. Arrett
SUITE 400, 6640 SHADY OAK ROAD
6640 Shady Oak Rd.
EDEN PRAIRIE, MN 55344

Note: A certificate of mailing can only be used for domestic mailings of the Fee(s) Transmittal. This certificate cannot be used for any other accompanying papers. Each additional paper, such as an assignment or formal drawing, must have its own certificate of mailing or transmission.

Certificate of Mailing or Transmission
I hereby certify that this Fee(s) Transmittal is being deposited with the United States Postal Service with sufficient postage for first class mail in an envelope addressed to the Mail Stop ISSUE FEE address above, or being facsimile transmitted to the USPTO (571) 273-2885, on the date indicated below.

(Depositor's name)
(Signature)
(Date)

APPLICATION NO.	FILING DATE	FIRST NAMED INVENTOR	ATTORNEY DOCKET NO.	CONFIRMATION NO.
12/895,610	09/30/2010	Mathew A. McPherson	M55.2P-14675-US02	8071

TITLE OF INVENTION: Archery Bow Cam

APPLN. TYPE	ENTITY STATUS	ISSUE FEE DUE	PUBLICATION FEE DUE	PREV. PAID ISSUE FEE	TOTAL FEE(S) DUE	DATE DUE
nonprovisional	SMALL	$480	$0	$0	$480	05/05/2014

EXAMINER	ART UNIT	CLASS-SUBCLASS
SIMMS JR, JOHN ELLIOTT	3711	124-025600

1. Change of correspondence address or indication of "Fee Address" (37 CFR 1.363).
- ☐ Change of correspondence address (or Change of Correspondence Address form PTO/SB/122) attached.
- ☐ "Fee Address" indication (or "Fee Address" Indication form PTO/SB/47; Rev 03-02 or more recent) attached. **Use of a Customer Number is required.**

2. For printing on the patent front page, list
(1) The names of up to 3 registered patent attorneys or agents OR, alternatively,
(2) The name of a single firm (having as a member a registered attorney or agent) and the names of up to 2 registered patent attorneys or agents. If no name is listed, no name will be printed.

1 Vidas, Arrett & Steinkraus
2
3

3. ASSIGNEE NAME AND RESIDENCE DATA TO BE PRINTED ON THE PATENT (print or type)

PLEASE NOTE: Unless an assignee is identified below, no assignee data will appear on the patent. If an assignee is identified below, the document has been filed for recordation as set forth in 37 CFR 3.11. Completion of this form is NOT a substitute for filing an assignment.

(A) NAME OF ASSIGNEE: MCP IP, LLC
(B) RESIDENCE: (CITY and STATE OR COUNTRY): Sparta, WI

Please check the appropriate assignee category or categories (will not be printed on the patent) : ☐ Individual ☒ Corporation or other private group entity ☐ Government

4a. The following fee(s) are submitted:
- ☒ Issue Fee
- ☐ Publication Fee (No small entity discount permitted)
- ☐ Advance Order - # of Copies _____

4b. Payment of Fee(s): **(Please first reapply any previously paid issue fee shown above)**
- ☐ A check is enclosed.
- ☒ Payment by credit card. Form PTO-2038 is attached.
- ☐ The Director is hereby authorized to charge the required fee(s), any deficiency, or credits any overpayment, to Deposit Account Number _____ (enclose an extra copy of this form).

5. **Change in Entity Status** (from status indicated above)
- ☐ Applicant certifying micro entity status. See 37 CFR 1.29 — NOTE: Absent a valid certification of Micro Entity Status (see forms PTO/SB/15A and 15B), issue fee payment in the micro entity amount will not be accepted at the risk of application abandonment.
- ☐ Applicant asserting small entity status. See 37 CFR 1.27 — NOTE: If the application was previously under micro entity status, checking this box will be taken to be a notification of loss of entitlement to micro entity status.
- ☐ Applicant changing to regular undiscounted fee status. — NOTE: Checking this box will be taken to be a notification of loss of entitlement to small or micro entity status, as applicable.

NOTE: This form must be signed in accordance with 37 CFR 1.31 and 1.33. See 37 CFR 1.4 for signature requirements and certifications.

Authorized Signature /Jeremy G Laabs/ Date February 5, 2014
Typed or printed name Jeremy G. Laabs Registration No. 53170

IPR2024-00523
Ravin EX1014 Page 71

PTO/SB/08a (01-10)
Approved for use through 07/31/2012. OMB 0651-0031
U.S. Patent and Trademark Office; U.S. DEPARTMENT OF COMMERCE
Under the Paperwork Reduction Act of 1995, no persons are required to respond to a collection of information unless it contains a valid OMB control number.

INFORMATION DISCLOSURE STATEMENT BY APPLICANT

(Not for submission under 37 CFR 1.99)

Application Number	12895610
Filing Date	2010-09-30
First Named Inventor	Mathew A. McPherson
Art Unit	3711
Examiner Name	
Attorney Docket Number	M55.2-14675-US02

U.S.PATENTS Remove

Examiner Initial*	Cite No	Patent Number	Kind Code[1]	Issue Date	Name of Patentee or Applicant of cited Document	Pages,Columns,Lines where Relevant Passages or Relevant Figures Appear
	1	3486495		1969-12-30	Allen	
	2	4060066		1977-11-29	Kudlacek	
	3	4064862		1977-12-27	Groner	
	4	4461267		1984-07-24	Simonds et al.	
	5	4515142		1985-05-07	Nurney	
	6	4519374		1985-05-28	Miller	
	7	4739744		1988-04-26	Nurney	
	8	4774927		1988-10-04	Larson	

INFORMATION DISCLOSURE STATEMENT BY APPLICANT (Not for submission under 37 CFR 1.99)	Application Number	12895610
	Filing Date	2010-09-30
	First Named Inventor	Mathew A. McPherson
	Art Unit	3711
	Examiner Name	
	Attorney Docket Number	M55.2-14675-US02

	9	4838236		1989-06-13	Kudlacek	
	10	4986250		1991-01-22	Darlington	
	11	5040520		1991-08-20	Nurney	
	12	5368006		1994-11-29	McPherson	
	13	5791322		1998-08-11	McPherson	
	14	5791323		1998-08-11	Dunlap	
	15	5960778		1999-10-05	Larson	
	16	5934265		1999-08-10	Darlington	
	17	6082347		2000-07-04	Darlington	
	18	6360735		2002-03-26	Larson et al.	
	19	RE37544		2002-02-12	Darlington	

INFORMATION DISCLOSURE STATEMENT BY APPLICANT (Not for submission under 37 CFR 1.99)		
	Application Number	12895610
	Filing Date	2010-09-30
	First Named Inventor	Mathew A. McPherson
	Art Unit	3711
	Examiner Name	
	Attorney Docket Number	M55.2-14675-US02

	20	6446619		2002-09-10	McPherson	
	21	6516790		2003-02-11	Darlington	
	22	6691692		2004-02-17	Adkins	
	23	6871643		2005-03-29	Cooper et al.	
	24	7082937		2006-08-01	Land	
	25	7188615		2007-03-13	Chang	
	26	RE39880		2007-10-16	McPherson	
	27	7305979		2007-12-11	Yehle	

If you wish to add additional U.S. Patent citation information please click the Add button. Add

U.S.PATENT APPLICATION PUBLICATIONS Remove

Examiner Initial*	Cite No	Publication Number	Kind Code[1]	Publication Date	Name of Patentee or Applicant of cited Document	Pages,Columns,Lines where Relevant Passages or Relevant Figures Appear
	1	20100089375		2010-04-15	McPherson et al.	

If you wish to add additional U.S. Published Application citation information please click the Add button. Add

INFORMATION DISCLOSURE STATEMENT BY APPLICANT (Not for submission under 37 CFR 1.99)		
	Application Number	12895610
	Filing Date	2010-09-30
	First Named Inventor	Mathew A. McPherson
	Art Unit	3711
	Examiner Name	
	Attorney Docket Number	M55.2-14675-US02

FOREIGN PATENT DOCUMENTS Remove

Examiner Initial*	Cite No	Foreign Document Number[3]	Country Code[2] ¡	Kind Code[4]	Publication Date	Name of Patentee or Applicant of cited Document	Pages,Columns,Lines where Relevant Passages or Relevant Figures Appear	T[5]
	1							☐

If you wish to add additional Foreign Patent Document citation information please click the Add button Add

NON-PATENT LITERATURE DOCUMENTS Remove

Examiner Initials*	Cite No	Include name of the author (in CAPITAL LETTERS), title of the article (when appropriate), title of the item (book, magazine, journal, serial, symposium, catalog, etc), date, pages(s), volume-issue number(s), publisher, city and/or country where published.	T[5]
	1	Priority Application No.: 61/247473; Filed: 2009-09-30; Inventor: McPherson.	☐

If you wish to add additional non-patent literature document citation information please click the Add button Add

EXAMINER SIGNATURE

Examiner Signature		Date Considered	

*EXAMINER: Initial if reference considered, whether or not citation is in conformance with MPEP 609. Draw line through a citation if not in conformance and not considered. Include copy of this form with next communication to applicant.

[1] See Kind Codes of USPTO Patent Documents at www.USPTO.GOV or MPEP 901.04. [2] Enter office that issued the document, by the two-letter code (WIPO Standard ST.3). [3] For Japanese patent documents, the indication of the year of the reign of the Emperor must precede the serial number of the patent document. [4] Kind of document by the appropriate symbols as indicated on the document under WIPO Standard ST.16 if possible. [5] Applicant is to place a check mark here if English language translation is attached.

Index of Claims	Application/Control No.	Applicant(s)/Patent Under Reexamination
	12895610	MCPHERSON, MATHEW A.
	Examiner	**Art Unit**
	JOHN E SIMMS JR	3711

✓	Rejected	-	Cancelled	N	Non-Elected	A	Appeal
=	Allowed	÷	Restricted	I	Interference	O	Objected

☐ Claims renumbered in the same order as presented by applicant ☐ CPA ☐ T.D. ☐ R.1.47

CLAIM		DATE								
Final	Original	10/26/2012	03/25/2013	11/08/2013	01/10/2014					
	1	✓	✓	✓	-					
1	2	✓	✓	O	=					
11	3	✓	✓	O	=					
2	4	✓	✓	O	=					
3	5	✓	✓	✓	=					
4	6	✓	✓	✓	=					
5	7	✓	✓	✓	=					
6	8	✓	✓	✓	=					
7	9	✓	✓	✓	=					
8	10	✓	✓	✓	=					
9	11	✓	✓	✓	=					
	12	✓	✓	✓	-					
13	13	✓	✓	✓	=					
12	14	✓	✓	O	=					
19	15	✓	✓	O	=					
14	16	✓	✓	✓	=					
15	17	✓	✓	O	=					
16	18	✓	✓	✓	=					
17	19	✓	✓	✓	=					
18	20	✓	✓	✓	=					
10	21			O	=					

Index of Claims	Application/Control No.	Applicant(s)/Patent Under Reexamination
	12895610	MCPHERSON, MATHEW A.
	Examiner	**Art Unit**
	JOHN E SIMMS JR	3711

✓	Rejected	-	Cancelled	N	Non-Elected	A	Appeal
=	Allowed	÷	Restricted	I	Interference	O	Objected

☐ Claims renumbered in the same order as presented by applicant ☐ CPA ☐ T.D. ☐ R.1.47

CLAIM		DATE								
Final	Original	10/26/2012	03/25/2013	11/08/2013						
	1	✓	✓	✓						
	2	✓	✓	O						
	3	✓	✓	O						
	4	✓	✓	O						
	5	✓	✓	✓						
	6	✓	✓	✓						
	7	✓	✓	✓						
	8	✓	✓	✓						
	9	✓	✓	✓						
	10	✓	✓	✓						
	11	✓	✓	✓						
	12	✓	✓	✓						
	13	✓	✓	✓						
	14	✓	✓	O						
	15	✓	✓	O						
	16	✓	✓	✓						
	17	✓	✓	O						
	18	✓	✓	✓						
	19	✓	✓	✓						
	20	✓	✓	✓						
	21			O						

Index of Claims	Application/Control No.	Applicant(s)/Patent Under Reexamination
	12895610	MCPHERSON, MATHEW A.
	Examiner	**Art Unit**
	JOHN E SIMMS JR	3711

✓	Rejected	-	Cancelled	N	Non-Elected	A	Appeal
=	Allowed	÷	Restricted	I	Interference	O	Objected

☐ Claims renumbered in the same order as presented by applicant ☐ CPA ☐ T.D. ☐ R.1.47

CLAIM		DATE								
Final	Original	10/26/2012	03/25/2013							
	1	✓	✓							
	2	✓	✓							
	3	✓	✓							
	4	✓	✓							
	5	✓	✓							
	6	✓	✓							
	7	✓	✓							
	8	✓	✓							
	9	✓	✓							
	10	✓	✓							
	11	✓	✓							
	12	✓	✓							
	13	✓	✓							
	14	✓	✓							
	15	✓	✓							
	16	✓	✓							
	17	✓	✓							
	18	✓	✓							
	19	✓	✓							
	20	✓	✓							

Index of Claims	Application/Control No.	Applicant(s)/Patent Under Reexamination
	12895610	MCPHERSON, MATHEW A.
	Examiner	**Art Unit**
	JOHN E SIMMS JR	3711

✓	Rejected	-	Cancelled	N	Non-Elected	A	Appeal
=	Allowed	÷	Restricted	I	Interference	O	Objected

☐ Claims renumbered in the same order as presented by applicant ☐ CPA ☐ T.D. ☐ R.1.47

CLAIM		DATE								
Final	Original	10/26/2012								
	1	✓								
	2	✓								
	3	✓								
	4	✓								
	5	✓								
	6	✓								
	7	✓								
	8	✓								
	9	✓								
	10	✓								
	11	✓								
	12	✓								
	13	✓								
	14	✓								
	15	✓								
	16	✓								
	17	✓								
	18	✓								
	19	✓								
	20	✓								

UNITED STATES PATENT AND TRADEMARK OFFICE

UNITED STATES DEPARTMENT OF COMMERCE
United States Patent and Trademark Office
Address: COMMISSIONER FOR PATENTS
P.O. Box 1450
Alexandria, Virginia 22313-1450
www.uspto.gov

APPLICATION NO.	FILING DATE	FIRST NAMED INVENTOR	ATTORNEY DOCKET NO.	CONFIRMATION NO.
12/895,610	09/30/2010	Mathew A. McPherson	M55.2P-14675-US02	8071

490 7590 03/29/2013
VIDAS, ARRETT & STEINKRAUS, P.A.
Richard A. Arrett
SUITE 400, 6640 SHADY OAK ROAD
6640 Shady Oak Rd.
EDEN PRAIRIE, MN 55344

EXAMINER
SIMMS JR, JOHN ELLIOTT

ART UNIT	PAPER NUMBER
3711	

NOTIFICATION DATE	DELIVERY MODE
03/29/2013	ELECTRONIC

Please find below and/or attached an Office communication concerning this application or proceeding.

The time period for reply, if any, is set in the attached communication.

Notice of the Office communication was sent electronically on above-indicated "Notification Date" to the following e-mail address(es):

mail@vaslaw.com
rleaf@vaslaw.com
rarrett@vaslaw.com

Office Action Summary	Application No.	Applicant(s)	
	12/895,610	MCPHERSON, MATHEW A.	
	Examiner	Art Unit	
	JOHN E. SIMMS JR	3711	

-- The MAILING DATE of this communication appears on the cover sheet with the correspondence address --

Period for Reply

A SHORTENED STATUTORY PERIOD FOR REPLY IS SET TO EXPIRE 3 MONTH(S) OR THIRTY (30) DAYS, WHICHEVER IS LONGER, FROM THE MAILING DATE OF THIS COMMUNICATION.

- Extensions of time may be available under the provisions of 37 CFR 1.136(a). In no event, however, may a reply be timely filed after SIX (6) MONTHS from the mailing date of this communication.
- If NO period for reply is specified above, the maximum statutory period will apply and will expire SIX (6) MONTHS from the mailing date of this communication.
- Failure to reply within the set or extended period for reply will, by statute, cause the application to become ABANDONED (35 U.S.C. § 133). Any reply received by the Office later than three months after the mailing date of this communication, even if timely filed, may reduce any earned patent term adjustment. See 37 CFR 1.704(b).

Status

1)☒ Responsive to communication(s) filed on *01 March 2013*.

2a)☒ This action is **FINAL**. 2b)☐ This action is non-final.

3)☐ An election was made by the applicant in response to a restriction requirement set forth during the interview on _____; the restriction requirement and election have been incorporated into this action.

4)☐ Since this application is in condition for allowance except for formal matters, prosecution as to the merits is closed in accordance with the practice under *Ex parte Quayle*, 1935 C.D. 11, 453 O.G. 213.

Disposition of Claims

5)☒ Claim(s) *1-20* is/are pending in the application.

5a) Of the above claim(s) _____ is/are withdrawn from consideration.

6)☐ Claim(s) _____ is/are allowed.

7)☒ Claim(s) *1-20* is/are rejected.

8)☐ Claim(s) _____ is/are objected to.

9)☐ Claim(s) _____ are subject to restriction and/or election requirement.

* If any claims have been determined allowable, you may be eligible to benefit from the **Patent Prosecution Highway** program at a participating intellectual property office for the corresponding application. For more information, please see http://www.uspto.gov/patents/init_events/pph/index.jsp or send an inquiry to PPHfeedback@uspto.gov.

Application Papers

10)☐ The specification is objected to by the Examiner.

11)☐ The drawing(s) filed on _____ is/are: a)☐ accepted or b)☐ objected to by the Examiner.

Applicant may not request that any objection to the drawing(s) be held in abeyance. See 37 CFR 1.85(a).

Replacement drawing sheet(s) including the correction is required if the drawing(s) is objected to. See 37 CFR 1.121(d).

Priority under 35 U.S.C. § 119

12)☐ Acknowledgment is made of a claim for foreign priority under 35 U.S.C. § 119(a)-(d) or (f).

a)☐ All b)☐ Some * c)☐ None of:

1.☐ Certified copies of the priority documents have been received.

2.☐ Certified copies of the priority documents have been received in Application No. _____.

3.☐ Copies of the certified copies of the priority documents have been received in this National Stage application from the International Bureau (PCT Rule 17.2(a)).

* See the attached detailed Office action for a list of the certified copies not received.

Attachment(s)

1) ☐ Notice of References Cited (PTO-892)

2) ☐ Information Disclosure Statement(s) (PTO/SB/08) Paper No(s)/Mail Date _____.

3) ☐ Interview Summary (PTO-413) Paper No(s)/Mail Date. _____ .

4) ☐ Other: _____.

IPR2024-00523
Ravin EX1014 Page 81

DETAILED ACTION

Claim Rejections - 35 USC § 103

1. The following is a quotation of 35 U.S.C. 103(a) which forms the basis for all obviousness rejections set forth in this Office action:

> (a) A patent may not be obtained though the invention is not identically disclosed or described as set forth in section 102 of this title, if the differences between the subject matter sought to be patented and the prior art are such that the subject matter as a whole would have been obvious at the time the invention was made to a person having ordinary skill in the art to which said subject matter pertains. Patentability shall not be negatived by the manner in which the invention was made.

2. Claims 1-20 are rejected under 35 U.S.C. 103(a) as being unpatentable over Simonds, U.S. Patent No. 4,438,753, in view of Darlington, U.S. Patent No. 6,516,790. As to Claim 1, Simonds teaches an archery bow (1) having a brace condition, see Figure 3, and a drawn condition, see Figure 5, and comprising a riser (2), first and second limbs (3,4) supported by the riser (2), and a first and second rotatable members (7) supported by the first limb (3), on a first axle (10), and by the second limb (4) on a second axle (10), Col. 3, ln. 40-60. The first rotatable member (7) comprises a cam track (14), a capstan (41) , and a terminal section (19), and a drawstring (32), extending between the first and second rotatable members (7), Col. 4, ln. 4-5, ln. 23-26, and Col. 5, ln. 65-69. Simonds teaches a power cable (33) attached at the terminal area (19) and extending toward the second limb (4), Col. 5, ln. 8-20, the power cable (33) comprising an elongate straight portion located near the first rotatable member (7), a capstan portion in contact with the capstan (41), and a terminal portion in contact with the terminal area (19). In the brace condition, the power cable (33) wraps around the capstan (41) in a first rotational direction as the power cable (33) is traversed from the elongate straight portion to the terminal portion, see drawing below; and when the bow is drawn from the brace condition, the first rotatable member (7) rotates in a second direction that is opposite the first rotational

direction, see drawing below and Figure 5. Simonds teaches an integral power cable and bowstring, Col. 5, ln. 8-11; therefore, the terminal portion (19), of the power cable (33) does not include a terminal. Darlington teaches a separate bowstring (BSC) and power cable (PC) with a terminal (74) for the power cable (PC). It would have been obvious to one of ordinary skill in the art, at the time of the invention, to provide Simonds with separate bowstring and power cable and terminal, for the power cable, as taught by Darlington, to provide Simonds with separate bowstring and power cable with a terminal for the power cable in the terminal area, to yield the predictable result of securely and independently anchoring the power cable in the terminal area.

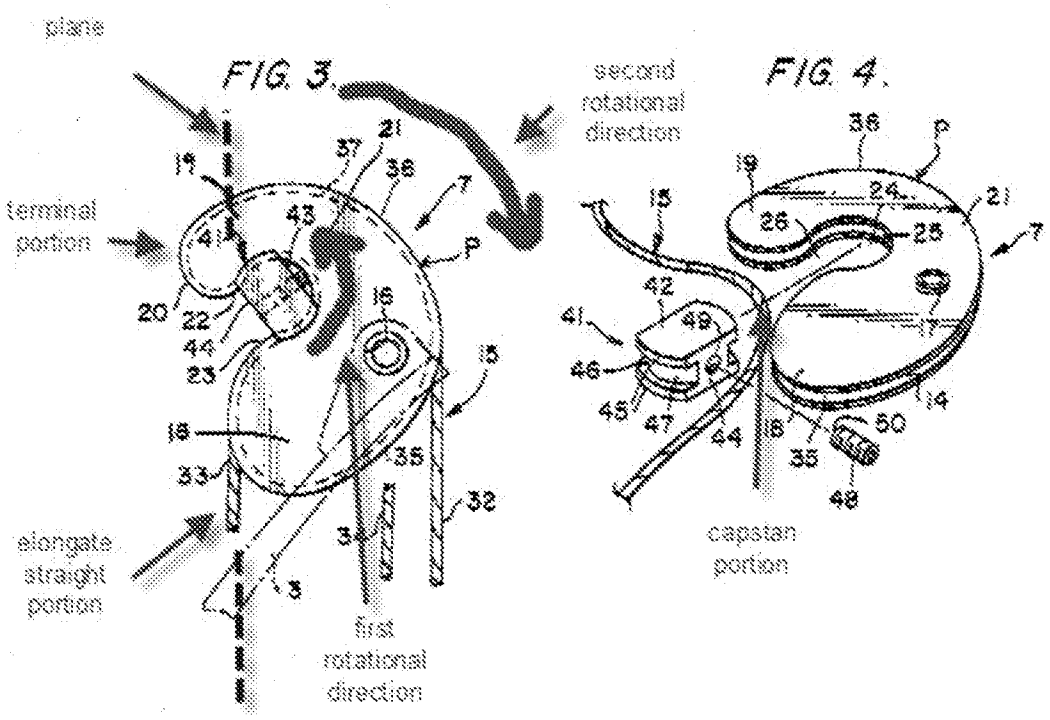

3. .....

4. As to Claim 2, Simonds, as modified, teaches the elongate straight portion of the power cable (33) defining a plane with the first axle and the terminal are located on opposite sides of the plane, see drawing above. As to Claim 3, Simonds, as modified, teaches that in the drawn

condition, the capstan (41) is located closer to the elongate straight portion than the terminal (at 19), see Figure 5. As to Claim 4, Darlington teaches a bow (30) having a brace condition, in which the power cable (PC) is secured to a terminal (74) aligned with the path of the cam track (71, 72) but not oriented in a cam track (71, 72), Col. 4, ln. 30-33, and see Figure 7. It would have been obvious to one of ordinary skill in the art at the time of the invention, to provide Simonds, as modified, with a power cable not oriented in a cam track, as taught by Darlington, to provide Simonds with a power cable not oriented in a portion of the cam track, when in brace condition, to yield the predictable result of limiting the bulk of the cam in the area proximate to the power cable, when in brace condition. In the event that doubt exists as to whether Darlington teaches the power cable not oriented in the cam track, the examiner finds that it would be obvious to one of ordinary skill in the art, at the time the invention was made, to arrange the terminal (74) as a location further to the right, on the rotatable member (60), as shown in Figure 7, to leave space between the power cable and the cam (62), since it has been held that rearranging parts of an invention involves only routing skill in the art, *In re Japikse*, 86 USPQ 70 (CCPA 1950). As to Claim 5, Simonds, as modified, teaches a distance between the first axle (10) and the terminal being greater than the distance between the first axle and the cam track (14), see drawing above. The terminal, located at the terminal portion is further from the axle than the cam track (14) running from the cam periphery (23). As to Claims 6-9, Darlington teaches a portion of a cam track comprising a module (62) attached to a first rotatable member (60), Col. 4, ln. 30-33, the module (62) is adjustable between a plurality of orientations with respect to the rotatable member (60), Col. 5, ln. 15-24, the orientations being rotational orientations about the first axle (82), Col. 5, ln. 16-17, and the module (62) is interchangeable

with a second module having a different shape, Col. 5, ln. 29-34. It would have been obvious to one of ordinary skill in the art, at the time of the invention, to provide Simonds, as modified, with a rotatable and interchangeable module, as taught by Darlington, to provide Simonds with variable adjustment capability to yield the predictable result of facilitating the customization of the bow performance characteristics, as needed. As to Claims 10 and 11, Simonds teaches a second power cable (34) and a cam (7), on the second limb (40) having the same features as the cam (7) described above, and the second power cable (34) extending toward the first limb (3), Col. 3, ln. 44-49 and Col. 5, ln. 17-21. Simonds and Darlington are further applied as in Claim 1 with the second appearance of each named element being a counterpart of the first and the second rotatable member being a mirror image of the first rotatable member. The same obviousness rationale applies for incorporating the teaching of Darlington with that of Simonds. As to Claims 12 and 13, Simonds and Darlington are applied as in Claim 1. Further, Simonds teaches an axle plane defined by first and second axles (10), see Figure 2, and an exit location defined where the drawstring exits the first rotatable member, see Figure 3. In brace condition, the axle plane divides the first rotatable member (7) to a first part and a second part, the capstan (41) and the terminal (at 19) located in the first part, the drawstring exit location located in the second part, and the distance between the terminal and the axle plane is greater than the distance between the capstan and the axle plane, measured along a line orthogonal to the axle plane see drawing below. As to Claim 14, Simonds and Darlington are applied as in Claim 2, with the cable portion plane being defined in place of the plane. As to Claims 15-18, Simonds and Darlington are applied as in claims 1, 3, 5, 4, and 6. As to Claim 19, Simonds and Darlington are applied as in Claim 10. Further, Simonds teaches the drawstring extending from the second

rotatable member (7) at a second exit location, see Figure 2, and the axle plane divides the second rotatable member into first and second parts appearing as a reversed mirror image of the drawing below, with features in the respective parts, as claimed, see Figure 2 depicting the second rotatable member (7) at the lower end of second limb (4). As to Claim 20, Simonds and Darlington are applied as in Claim 11.

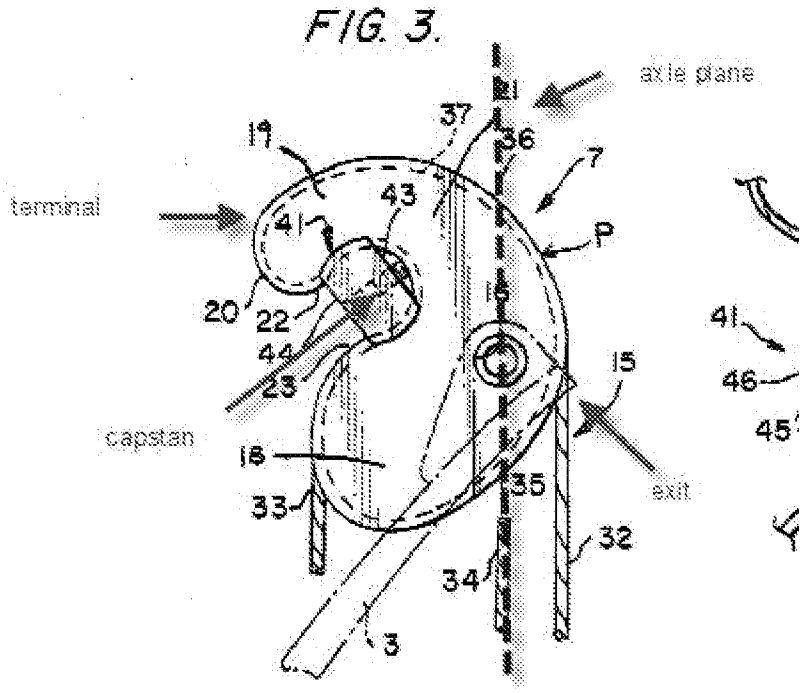

5.

Response to Arguments

6. Applicant's arguments filed 1 March 2013 have been fully considered but they are not persuasive.

7. The examiner maintains the position, as set forth in the office action, regarding the teaching of Simonds. Applicant's argument that the set screw (48) is a terminal is not

persuasive. The claimed element, namely "a terminal" is interpreted in view of applicant's specification to be a post configured to retain a looped end of an archery bow cable. The comparable structure, in Simonds, is the keeper/capstan cooperating with a narrowed neck passage (26), secured by the set screw (48), see Col. 5, ln. 65 - Col. 6, ln. 1. A part of the terminal portion, as taught by Simonds, lies in the area of reference numerals 20 and 22, appearing in Figure 3. Simonds, as modified by Darlington, would suggest to one skilled in the art, that a terminal such as taught by Darlington, could function effectively at a location occupied by the elements performing the function of a terminal, in Simonds. The combination of the teaching of the references would include configurations meeting the claimed limitations, as set forth in the office action.

8. In response to applicant's argument that combining the teaching of Darlington with that of Simonds would result if a configuration of parts not meeting the claims, the test for obviousness is not whether the features of a secondary reference may be bodily incorporated into the structure of the primary reference; nor is it that the claimed invention must be expressly suggested in any one or all of the references. Rather, the test is what the combined teachings of the references would have suggested to those of ordinary skill in the art. See *In re Keller*, 642 F.2d 413, 208 USPQ 871 (CCPA 1981). Applicant argues that incorporating the terminal of Darlington into the rotatable member of Simonds would prompt one of ordinary skill to remove the capstan/keeper and narrowed neck passage of Simonds and replace these features with a terminal located so as to not meet the claim limitations. Applicant has presented a marked up drawing depicting a possible modification of Simonds with the capstan/keeper removed and a terminal placed in a location which would not meet the claimed limitations. The examiner

maintains that Simonds teaches wrapping the cable around a capstan and providing the function of a terminal with the features as discussed above. The combination of the teachings of Simonds and Darlington is not limited to the specific configuration as contemplated by the applicant.

Conclusion

9. **THIS ACTION IS MADE FINAL.** Applicant is reminded of the extension of time policy as set forth in 37 CFR 1.136(a).

A shortened statutory period for reply to this final action is set to expire THREE MONTHS from the mailing date of this action. In the event a first reply is filed within TWO MONTHS of the mailing date of this final action and the advisory action is not mailed until after the end of the THREE-MONTH shortened statutory period, then the shortened statutory period will expire on the date the advisory action is mailed, and any extension fee pursuant to 37 CFR 1.136(a) will be calculated from the mailing date of the advisory action. In no event, however, will the statutory period for reply expire later than SIX MONTHS from the mailing date of this final action.

Any inquiry concerning this communication or earlier communications from the examiner should be directed to JOHN E. SIMMS JR whose telephone number is (571)270-7474. The examiner can normally be reached on M-F 8:30 a.m. - 5:00 p.m..

If attempts to reach the examiner by telephone are unsuccessful, the examiner's supervisor, Eugene Kim can be reached on (571) 272-4463. The fax phone number for the organization where this application or proceeding is assigned is 571-273-8300.

Information regarding the status of an application may be obtained from the Patent Application Information Retrieval (PAIR) system. Status information for published applications may be obtained from either Private PAIR or Public PAIR. Status information for unpublished applications is available through Private PAIR only. For more information about the PAIR system, see http://pair-direct.uspto.gov. Should you have questions on access to the Private PAIR system, contact the Electronic Business Center (EBC) at 866-217-9197 (toll-free). If you would like assistance from a USPTO Customer Service Representative or access to the automated information system, call 800-786-9199 (IN USA OR CANADA) or 571-272-1000.

/JOHN E SIMMS JR/
Examiner, Art Unit 3711
25 March 2013

/ALVIN A HUNTER/
Primary Examiner, Art Unit 3711

UNITED STATES PATENT AND TRADEMARK OFFICE

UNITED STATES DEPARTMENT OF COMMERCE
United States Patent and Trademark Office
Address: COMMISSIONER FOR PATENTS
P.O. Box 1450
Alexandria, Virginia 22313-1450
www.uspto.gov

APPLICATION NUMBER	FILING or 371(c) DATE	GRP ART UNIT	FIL FEE REC'D	ATTY.DOCKET.NO	TOT CLAIMS	IND CLAIMS
12/895,610	09/30/2010	3711	527	M55.2P-14675-US02	20	2

CONFIRMATION NO. 8071

UPDATED FILING RECEIPT

490
VIDAS, ARRETT & STEINKRAUS, P.A.
SUITE 400, 6640 SHADY OAK ROAD
EDEN PRAIRIE, MN 55344

OC000000045124691

Date Mailed: 12/27/2010

Receipt is acknowledged of this non-provisional patent application. The application will be taken up for examination in due course. Applicant will be notified as to the results of the examination. Any correspondence concerning the application must include the following identification information: the U.S. APPLICATION NUMBER, FILING DATE, NAME OF APPLICANT, and TITLE OF INVENTION. Fees transmitted by check or draft are subject to collection. Please verify the accuracy of the data presented on this receipt. **If an error is noted on this Filing Receipt, please submit a written request for a Filing Receipt Correction. Please provide a copy of this Filing Receipt with the changes noted thereon. If you received a "Notice to File Missing Parts" for this application, please submit any corrections to this Filing Receipt with your reply to the Notice. When the USPTO processes the reply to the Notice, the USPTO will generate another Filing Receipt incorporating the requested corrections**

Applicant(s)
Mathew A. McPherson, Norwalk, WI;

Power of Attorney: The patent practitioners associated with Customer Number 00490

Domestic Priority data as claimed by applicant
This appln claims benefit of 61/247,473 09/30/2009

Foreign Applications

If Required, Foreign Filing License Granted: 10/15/2010

The country code and number of your priority application, to be used for filing abroad under the Paris Convention, is **US 12/895,610**

Projected Publication Date: Request for Non-Publication Acknowledged

Non-Publication Request: Yes

Early Publication Request: No
**** SMALL ENTITY ****

Title

Archery Bow Cam

Preliminary Class

124

PROTECTING YOUR INVENTION OUTSIDE THE UNITED STATES

Since the rights granted by a U.S. patent extend only throughout the territory of the United States and have no effect in a foreign country, an inventor who wishes patent protection in another country must apply for a patent in a specific country or in regional patent offices. Applicants may wish to consider the filing of an international application under the Patent Cooperation Treaty (PCT). An international (PCT) application generally has the same effect as a regular national patent application in each PCT-member country. The PCT process **simplifies** the filing of patent applications on the same invention in member countries, but **does not result** in a grant of "an international patent" and does not eliminate the need of applicants to file additional documents and fees in countries where patent protection is desired.

Almost every country has its own patent law, and a person desiring a patent in a particular country must make an application for patent in that country in accordance with its particular laws. Since the laws of many countries differ in various respects from the patent law of the United States, applicants are advised to seek guidance from specific foreign countries to ensure that patent rights are not lost prematurely.

Applicants also are advised that in the case of inventions made in the United States, the Director of the USPTO must issue a license before applicants can apply for a patent in a foreign country. The filing of a U.S. patent application serves as a request for a foreign filing license. The application's filing receipt contains further information and guidance as to the status of applicant's license for foreign filing.

Applicants may wish to consult the USPTO booklet, "General Information Concerning Patents" (specifically, the section entitled "Treaties and Foreign Patents") for more information on timeframes and deadlines for filing foreign patent applications. The guide is available either by contacting the USPTO Contact Center at 800-786-9199, or it can be viewed on the USPTO website at http://www.uspto.gov/web/offices/pac/doc/general/index.html.

For information on preventing theft of your intellectual property (patents, trademarks and copyrights), you may wish to consult the U.S. Government website, http://www.stopfakes.gov. Part of a Department of Commerce initiative, this website includes self-help "toolkits" giving innovators guidance on how to protect intellectual property in specific countries such as China, Korea and Mexico. For questions regarding patent enforcement issues, applicants may call the U.S. Government hotline at 1-866-999-HALT (1-866-999-4158).

LICENSE FOR FOREIGN FILING UNDER

Title 35, United States Code, Section 184

Title 37, Code of Federal Regulations, 5.11 & 5.15

GRANTED

The applicant has been granted a license under 35 U.S.C. 184, if the phrase "IF REQUIRED, FOREIGN FILING LICENSE GRANTED" followed by a date appears on this form. Such licenses are issued in all applications where the conditions for issuance of a license have been met, regardless of whether or not a license may be required as

IPR2024-00523
Ravin EX1014 Page 91

set forth in 37 CFR 5.15. The scope and limitations of this license are set forth in 37 CFR 5.15(a) unless an earlier license has been issued under 37 CFR 5.15(b). The license is subject to revocation upon written notification. The date indicated is the effective date of the license, unless an earlier license of similar scope has been granted under 37 CFR 5.13 or 5.14.

This license is to be retained by the licensee and may be used at any time on or after the effective date thereof unless it is revoked. This license is automatically transferred to any related applications(s) filed under 37 CFR 1.53(d). This license is not retroactive.

The grant of a license does not in any way lessen the responsibility of a licensee for the security of the subject matter as imposed by any Government contract or the provisions of existing laws relating to espionage and the national security or the export of technical data. Licensees should apprise themselves of current regulations especially with respect to certain countries, of other agencies, particularly the Office of Defense Trade Controls, Department of State (with respect to Arms, Munitions and Implements of War (22 CFR 121-128)); the Bureau of Industry and Security, Department of Commerce (15 CFR parts 730-774); the Office of Foreign AssetsControl, Department of Treasury (31 CFR Parts 500+) and the Department of Energy.

NOT GRANTED

No license under 35 U.S.C. 184 has been granted at this time, if the phrase "IF REQUIRED, FOREIGN FILING LICENSE GRANTED" DOES NOT appear on this form. Applicant may still petition for a license under 37 CFR 5.12, if a license is desired before the expiration of 6 months from the filing date of the application. If 6 months has lapsed from the filing date of this application and the licensee has not received any indication of a secrecy order under 35 U.S.C. 181, the licensee may foreign file the application pursuant to 37 CFR 5.15(b).

UNITED STATES PATENT AND TRADEMARK OFFICE

UNITED STATES DEPARTMENT OF COMMERCE
United States Patent and Trademark Office
Address: COMMISSIONER FOR PATENTS
P.O. Box 1450
Alexandria, Virginia 22313-1450
www.uspto.gov

APPLICATION NUMBER	FILING or 371(c) DATE	GRP ART UNIT	FIL FEE REC'D	ATTY.DOCKET.NO	TOT CLAIMS	IND CLAIMS
12/895,610	09/30/2010	3711	462	M55.2-14675-US02	20	2

CONFIRMATION NO. 8071

490
VIDAS, ARRETT & STEINKRAUS, P.A.
SUITE 400, 6640 SHADY OAK ROAD
EDEN PRAIRIE, MN 55344

FILING RECEIPT

OC000000044013786

Date Mailed: 10/20/2010

Receipt is acknowledged of this non-provisional patent application. The application will be taken up for examination in due course. Applicant will be notified as to the results of the examination. Any correspondence concerning the application must include the following identification information: the U.S. APPLICATION NUMBER, FILING DATE, NAME OF APPLICANT, and TITLE OF INVENTION. Fees transmitted by check or draft are subject to collection. Please verify the accuracy of the data presented on this receipt. **If an error is noted on this Filing Receipt, please submit a written request for a Filing Receipt Correction. Please provide a copy of this Filing Receipt with the changes noted thereon. If you received a "Notice to File Missing Parts" for this application, please submit any corrections to this Filing Receipt with your reply to the Notice. When the USPTO processes the reply to the Notice, the USPTO will generate another Filing Receipt incorporating the requested corrections**

Applicant(s)
Mathew A. McPherson, Norwalk, WI;

Power of Attorney: None

Domestic Priority data as claimed by applicant
This appln claims benefit of 61/247,473 09/30/2009

Foreign Applications

If Required, Foreign Filing License Granted: 10/15/2010

The country code and number of your priority application, to be used for filing abroad under the Paris Convention, is **US 12/895,610**

Projected Publication Date: Request for Non-Publication Acknowledged

Non-Publication Request: Yes

Early Publication Request: No
**** SMALL ENTITY ****

Title

Archery Bow Cam

Preliminary Class

124

PROTECTING YOUR INVENTION OUTSIDE THE UNITED STATES

Since the rights granted by a U.S. patent extend only throughout the territory of the United States and have no effect in a foreign country, an inventor who wishes patent protection in another country must apply for a patent in a specific country or in regional patent offices. Applicants may wish to consider the filing of an international application under the Patent Cooperation Treaty (PCT). An international (PCT) application generally has the same effect as a regular national patent application in each PCT-member country. The PCT process **simplifies** the filing of patent applications on the same invention in member countries, but **does not result** in a grant of "an international patent" and does not eliminate the need of applicants to file additional documents and fees in countries where patent protection is desired.

Almost every country has its own patent law, and a person desiring a patent in a particular country must make an application for patent in that country in accordance with its particular laws. Since the laws of many countries differ in various respects from the patent law of the United States, applicants are advised to seek guidance from specific foreign countries to ensure that patent rights are not lost prematurely.

Applicants also are advised that in the case of inventions made in the United States, the Director of the USPTO must issue a license before applicants can apply for a patent in a foreign country. The filing of a U.S. patent application serves as a request for a foreign filing license. The application's filing receipt contains further information and guidance as to the status of applicant's license for foreign filing.

Applicants may wish to consult the USPTO booklet, "General Information Concerning Patents" (specifically, the section entitled "Treaties and Foreign Patents") for more information on timeframes and deadlines for filing foreign patent applications. The guide is available either by contacting the USPTO Contact Center at 800-786-9199, or it can be viewed on the USPTO website at http://www.uspto.gov/web/offices/pac/doc/general/index.html.

For information on preventing theft of your intellectual property (patents, trademarks and copyrights), you may wish to consult the U.S. Government website, http://www.stopfakes.gov. Part of a Department of Commerce initiative, this website includes self-help "toolkits" giving innovators guidance on how to protect intellectual property in specific countries such as China, Korea and Mexico. For questions regarding patent enforcement issues, applicants may call the U.S. Government hotline at 1-866-999-HALT (1-866-999-4158).

LICENSE FOR FOREIGN FILING UNDER

Title 35, United States Code, Section 184

Title 37, Code of Federal Regulations, 5.11 & 5.15

GRANTED

The applicant has been granted a license under 35 U.S.C. 184, if the phrase "IF REQUIRED, FOREIGN FILING LICENSE GRANTED" followed by a date appears on this form. Such licenses are issued in all applications where the conditions for issuance of a license have been met, regardless of whether or not a license may be required as

set forth in 37 CFR 5.15. The scope and limitations of this license are set forth in 37 CFR 5.15(a) unless an earlier license has been issued under 37 CFR 5.15(b). The license is subject to revocation upon written notification. The date indicated is the effective date of the license, unless an earlier license of similar scope has been granted under 37 CFR 5.13 or 5.14.

This license is to be retained by the licensee and may be used at any time on or after the effective date thereof unless it is revoked. This license is automatically transferred to any related applications(s) filed under 37 CFR 1.53(d). This license is not retroactive.

The grant of a license does not in any way lessen the responsibility of a licensee for the security of the subject matter as imposed by any Government contract or the provisions of existing laws relating to espionage and the national security or the export of technical data. Licensees should apprise themselves of current regulations especially with respect to certain countries, of other agencies, particularly the Office of Defense Trade Controls, Department of State (with respect to Arms, Munitions and Implements of War (22 CFR 121-128)); the Bureau of Industry and Security, Department of Commerce (15 CFR parts 730-774); the Office of Foreign AssetsControl, Department of Treasury (31 CFR Parts 500+) and the Department of Energy.

NOT GRANTED

No license under 35 U.S.C. 184 has been granted at this time, if the phrase "IF REQUIRED, FOREIGN FILING LICENSE GRANTED" DOES NOT appear on this form. Applicant may still petition for a license under 37 CFR 5.12, if a license is desired before the expiration of 6 months from the filing date of the application. If 6 months has lapsed from the filing date of this application and the licensee has not received any indication of a secrecy order under 35 U.S.C. 181, the licensee may foreign file the application pursuant to 37 CFR 5.15(b).

Electronic Patent Application Fee Transmittal

Application Number:	12895610
Filing Date:	30-Sep-2010
Title of Invention:	Archery Bow Cam
First Named Inventor/Applicant Name:	Mathew A. McPherson
Filer:	Jeremy G. Laabs/Samantha Painschab
Attorney Docket Number:	M55.2P-14675-US02

Filed as Small Entity

Utility under 35 USC 111(a) Filing Fees

Description	Fee Code	Quantity	Amount	Sub-Total in USD($)
Basic Filing:				
Pages:				
Claims:				
Miscellaneous-Filing:				
Petition:				
Patent-Appeals-and-Interference:				
Post-Allowance-and-Post-Issuance:				
Utility Appl Issue Fee	2501	1	480	480
Extension-of-Time:				

Description	Fee Code	Quantity	Amount	Sub-Total in USD($)
Miscellaneous:				
			Total in USD ($)	**480**

Document code: WFEE

United States Patent and Trademark Office
Sales Receipt for Accounting Date: 01/27/2014

LFULTON SALE #00000001 Mailroom Dt: 12/20/2013 220350 12895610
01 FC : 2201 210.00 DA

PTO/SB/06 (09-11)
Approved for use through 1/31/2014. OMB 0651-0032
U.S. Patent and Trademark Office; U.S. DEPARTMENT OF COMMERCE
Under the Paperwork Reduction Act of 1995, no persons are required to respond to a collection of information unless it displays a valid OMB control number.

PATENT APPLICATION FEE DETERMINATION RECORD

Substitute for Form PTO-875

Application or Docket Number	Filing Date	
12/895,610	09/30/2010	☐ To be Mailed

ENTITY: ☐ LARGE ☒ SMALL ☐ MICRO

APPLICATION AS FILED – PART I

FOR	(Column 1) NUMBER FILED	(Column 2) NUMBER EXTRA	RATE ($)	FEE ($)
☐ BASIC FEE (37 CFR 1.16(a), (b), or (c))	N/A	N/A	N/A	
☐ SEARCH FEE (37 CFR 1.16(k), (i), or (m))	N/A	N/A	N/A	
☐ EXAMINATION FEE (37 CFR 1.16(o), (p), or (q))	N/A	N/A	N/A	
TOTAL CLAIMS (37 CFR 1.16(i))	minus 20 =	*	x $ =	
INDEPENDENT CLAIMS (37 CFR 1.16(h))	minus 3 =	*	x $ =	
☐ APPLICATION SIZE FEE (37 CFR 1.16(s))	If the specification and drawings exceed 100 sheets of paper, the application size fee due is $310 ($155 for small entity) for each additional 50 sheets or fraction thereof. See 35 U.S.C. 41(a)(1)(G) and 37 CFR 1.16(s).			
☐ MULTIPLE DEPENDENT CLAIM PRESENT (37 CFR 1.16(j))				
* If the difference in column 1 is less than zero, enter "0" in column 2.			TOTAL	

APPLICATION AS AMENDED – PART II

AMENDMENT

12/20/2013	(Column 1) CLAIMS REMAINING AFTER AMENDMENT		(Column 2) HIGHEST NUMBER PREVIOUSLY PAID FOR	(Column 3) PRESENT EXTRA	RATE ($)	ADDITIONAL FEE ($)
Total (37 CFR 1.16(i))	* 19	Minus	** 21	= 0	x $40 =	0
Independent (37 CFR 1.16(h))	* 4	Minus	***3	= 1	x $210 =	210
☐ Application Size Fee (37 CFR 1.16(s))						
☐ FIRST PRESENTATION OF MULTIPLE DEPENDENT CLAIM (37 CFR 1.16(j))						
					TOTAL ADD'L FEE	**210**

AMENDMENT

	(Column 1) CLAIMS REMAINING AFTER AMENDMENT		(Column 2) HIGHEST NUMBER PREVIOUSLY PAID FOR	(Column 3) PRESENT EXTRA	RATE ($)	ADDITIONAL FEE ($)
Total (37 CFR 1.16(i))	*	Minus	**	=	x $ =	
Independent (37 CFR 1.16(h))	*	Minus	***	=	x $ =	
☐ Application Size Fee (37 CFR 1.16(s))						
☐ FIRST PRESENTATION OF MULTIPLE DEPENDENT CLAIM (37 CFR 1.16(j))						
					TOTAL ADD'L FEE	

* If the entry in column 1 is less than the entry in column 2, write "0" in column 3.
** If the "Highest Number Previously Paid For" IN THIS SPACE is less than 20, enter "20".
*** If the "Highest Number Previously Paid For" IN THIS SPACE is less than 3, enter "3".
The "Highest Number Previously Paid For" (Total or Independent) is the highest number found in the appropriate box in column 1.

SLIE
/LISA FULTON/

This collection of information is required by 37 CFR 1.16. The information is required to obtain or retain a benefit by the public which is to file (and by the USPTO to process) an application. Confidentiality is governed by 35 U.S.C. 122 and 37 CFR 1.14. This collection is estimated to take 12 minutes to complete, including gathering, preparing, and submitting the completed application form to the USPTO. Time will vary depending upon the individual case. Any comments on the amount of time you require to complete this form and/or suggestions for reducing this burden, should be sent to the Chief Information Officer, U.S. Patent and Trademark Office, U.S. Department of Commerce, P.O. Box 1450, Alexandria, VA 22313-1450. DO NOT SEND FEES OR COMPLETED FORMS TO THIS ADDRESS. **SEND TO: Commissioner for Patents, P.O. Box 1450, Alexandria, VA 22313-1450.**
If you need assistance in completing the form, call 1-800-PTO-9199 and select option 2.

Electronic Patent Application Fee Transmittal

Application Number:	12895610
Filing Date:	30-Sep-2010
Title of Invention:	Archery Bow Cam
First Named Inventor/Applicant Name:	Mathew A. McPherson
Filer:	Jeremy G. Laabs
Attorney Docket Number:	M55.2P-14675-US02

Filed as Small Entity

Utility under 35 USC 111(a) Filing Fees

Description	Fee Code	Quantity	Amount	Sub-Total in USD($)
Basic Filing:				
Pages:				
Claims:				
Claims in excess of 20	2202	1	40	40
Miscellaneous-Filing:				
Petition:				
Patent-Appeals-and-Interference:				
Post-Allowance-and-Post-Issuance:				
Extension-of-Time:				

Description	Fee Code	Quantity	Amount	Sub-Total in USD($)
Miscellaneous:				
Request for Continued Examination	2801	1	600	600
		Total in USD ($)		**640**

PTO/SB/06 (09-11)
Approved for use through 1/31/2014. OMB 0651-0032
U.S. Patent and Trademark Office; U.S. DEPARTMENT OF COMMERCE
Under the Paperwork Reduction Act of 1995, no persons are required to respond to a collection of information unless it displays a valid OMB control number.

PATENT APPLICATION FEE DETERMINATION RECORD

Substitute for Form PTO-875

Application or Docket Number	Filing Date	
12/895,610	09/30/2010	☐ To be Mailed

ENTITY: ☐ LARGE ☒ SMALL ☐ MICRO

APPLICATION AS FILED – PART I

FOR	(Column 1) NUMBER FILED	(Column 2) NUMBER EXTRA	RATE ($)	FEE ($)
☐ BASIC FEE (37 CFR 1.16(a), (b), or (c))	N/A	N/A	N/A	
☐ SEARCH FEE (37 CFR 1.16(k), (i), or (m))	N/A	N/A	N/A	
☐ EXAMINATION FEE (37 CFR 1.16(o), (p), or (q))	N/A	N/A	N/A	
TOTAL CLAIMS (37 CFR 1.16(i))	minus 20 =	*	x $ =	
INDEPENDENT CLAIMS (37 CFR 1.16(h))	minus 3 =	*	x $ =	
☐ APPLICATION SIZE FEE (37 CFR 1.16(s))	If the specification and drawings exceed 100 sheets of paper, the application size fee due is $310 ($155 for small entity) for each additional 50 sheets or fraction thereof. See 35 U.S.C. 41(a)(1)(G) and 37 CFR 1.16(s).			
☐ MULTIPLE DEPENDENT CLAIM PRESENT (37 CFR 1.16(j))				
* If the difference in column 1 is less than zero, enter "0" in column 2.			TOTAL	

APPLICATION AS AMENDED – PART II

AMENDMENT

07/01/2013	(Column 1) CLAIMS REMAINING AFTER AMENDMENT		(Column 2) HIGHEST NUMBER PREVIOUSLY PAID FOR	(Column 3) PRESENT EXTRA	RATE ($)	ADDITIONAL FEE ($)
Total (37 CFR 1.16(i))	* 21	Minus	** 20	= 1	x $40 =	40
Independent (37 CFR 1.16(h))	* 2	Minus	***3	= 0	x $210 =	0
☐ Application Size Fee (37 CFR 1.16(s))						
☐ FIRST PRESENTATION OF MULTIPLE DEPENDENT CLAIM (37 CFR 1.16(j))						
					TOTAL ADD'L FEE	**40**

AMENDMENT

	(Column 1) CLAIMS REMAINING AFTER AMENDMENT		(Column 2) HIGHEST NUMBER PREVIOUSLY PAID FOR	(Column 3) PRESENT EXTRA	RATE ($)	ADDITIONAL FEE ($)
Total (37 CFR 1.16(i))	*	Minus	**	=	x $ =	
Independent (37 CFR 1.16(h))	*	Minus	***	=	x $ =	
☐ Application Size Fee (37 CFR 1.16(s))						
☐ FIRST PRESENTATION OF MULTIPLE DEPENDENT CLAIM (37 CFR 1.16(j))						
					TOTAL ADD'L FEE	

* If the entry in column 1 is less than the entry in column 2, write "0" in column 3.

** If the "Highest Number Previously Paid For" IN THIS SPACE is less than 20, enter "20".

*** If the "Highest Number Previously Paid For" IN THIS SPACE is less than 3, enter "3".

The "Highest Number Previously Paid For" (Total or Independent) is the highest number found in the appropriate box in column 1.

LIE
/DORRETTA BROOKS/

This collection of information is required by 37 CFR 1.16. The information is required to obtain or retain a benefit by the public which is to file (and by the USPTO to process) an application. Confidentiality is governed by 35 U.S.C. 122 and 37 CFR 1.14. This collection is estimated to take 12 minutes to complete, including gathering, preparing, and submitting the completed application form to the USPTO. Time will vary depending upon the individual case. Any comments on the amount of time you require to complete this form and/or suggestions for reducing this burden, should be sent to the Chief Information Officer, U.S. Patent and Trademark Office, U.S. Department of Commerce, P.O. Box 1450, Alexandria, VA 22313-1450. DO NOT SEND FEES OR COMPLETED FORMS TO THIS ADDRESS. **SEND TO: Commissioner for Patents, P.O. Box 1450, Alexandria, VA 22313-1450.**

If you need assistance in completing the form, call 1-800-PTO-9199 and select option 2.

PTO/SB/06 (09-11)
Approved for use through 1/31/2014. OMB 0651-0032
U.S. Patent and Trademark Office; U.S. DEPARTMENT OF COMMERCE
Under the Paperwork Reduction Act of 1995, no persons are required to respond to a collection of information unless it displays a valid OMB control number.

PATENT APPLICATION FEE DETERMINATION RECORD

Substitute for Form PTO-875

Application or Docket Number	Filing Date	
12/895,610	09/30/2010	☐ To be Mailed

ENTITY: ☐ LARGE ☒ SMALL ☐ MICRO

APPLICATION AS FILED – PART I

FOR	(Column 1) NUMBER FILED	(Column 2) NUMBER EXTRA	RATE ($)	FEE ($)
☐ BASIC FEE (37 CFR 1.16(a), (b), or (c))	N/A	N/A	N/A	
☐ SEARCH FEE (37 CFR 1.16(k), (i), or (m))	N/A	N/A	N/A	
☐ EXAMINATION FEE (37 CFR 1.16(o), (p), or (q))	N/A	N/A	N/A	
TOTAL CLAIMS (37 CFR 1.16(i))	minus 20 =	*	x $ =	
INDEPENDENT CLAIMS (37 CFR 1.16(h))	minus 3 =	*	x $ =	
☐ APPLICATION SIZE FEE (37 CFR 1.16(s))	If the specification and drawings exceed 100 sheets of paper, the application size fee due is $310 ($155 for small entity) for each additional 50 sheets or fraction thereof. See 35 U.S.C. 41(a)(1)(G) and 37 CFR 1.16(s).			
☐ MULTIPLE DEPENDENT CLAIM PRESENT (37 CFR 1.16(j))				
* If the difference in column 1 is less than zero, enter "0" in column 2.			TOTAL	

APPLICATION AS AMENDED – PART II

AMENDMENT

05/29/2013	(Column 1) CLAIMS REMAINING AFTER AMENDMENT		(Column 2) HIGHEST NUMBER PREVIOUSLY PAID FOR	(Column 3) PRESENT EXTRA	RATE ($)	ADDITIONAL FEE ($)
Total (37 CFR 1.16(i))	* 20	Minus	** 20	= 0	x $40 =	0
Independent (37 CFR 1.16(h))	* 2	Minus	***3	= 0	x $210 =	0
☐ Application Size Fee (37 CFR 1.16(s))						
☐ FIRST PRESENTATION OF MULTIPLE DEPENDENT CLAIM (37 CFR 1.16(j))						
					TOTAL ADD'L FEE	0

AMENDMENT

	(Column 1) CLAIMS REMAINING AFTER AMENDMENT		(Column 2) HIGHEST NUMBER PREVIOUSLY PAID FOR	(Column 3) PRESENT EXTRA	RATE ($)	ADDITIONAL FEE ($)
Total (37 CFR 1.16(i))	*	Minus	**	=	x $ =	
Independent (37 CFR 1.16(h))	*	Minus	***	=	x $ =	
☐ Application Size Fee (37 CFR 1.16(s))						
☐ FIRST PRESENTATION OF MULTIPLE DEPENDENT CLAIM (37 CFR 1.16(j))						
					TOTAL ADD'L FEE	

* If the entry in column 1 is less than the entry in column 2, write "0" in column 3.

** If the "Highest Number Previously Paid For" IN THIS SPACE is less than 20, enter "20".

*** If the "Highest Number Previously Paid For" IN THIS SPACE is less than 3, enter "3".

The "Highest Number Previously Paid For" (Total or Independent) is the highest number found in the appropriate box in column 1.

LIE
/CHERYL CLARK/

This collection of information is required by 37 CFR 1.16. The information is required to obtain or retain a benefit by the public which is to file (and by the USPTO to process) an application. Confidentiality is governed by 35 U.S.C. 122 and 37 CFR 1.14. This collection is estimated to take 12 minutes to complete, including gathering, preparing, and submitting the completed application form to the USPTO. Time will vary depending upon the individual case. Any comments on the amount of time you require to complete this form and/or suggestions for reducing this burden, should be sent to the Chief Information Officer, U.S. Patent and Trademark Office, U.S. Department of Commerce, P.O. Box 1450, Alexandria, VA 22313-1450. DO NOT SEND FEES OR COMPLETED FORMS TO THIS ADDRESS. **SEND TO: Commissioner for Patents, P.O. Box 1450, Alexandria, VA 22313-1450.**

If you need assistance in completing the form, call 1-800-PTO-9199 and select option 2.

Electronic Patent Application Fee Transmittal

Application Number:	12895610
Filing Date:	30-Sep-2010
Title of Invention:	Archery Bow Cam
First Named Inventor/Applicant Name:	Mathew A. McPherson
Filer:	Jeremy G. Laabs
Attorney Docket Number:	M55.2P-14675-US02

Filed as Small Entity

Utility under 35 USC 111(a) Filing Fees

Description	Fee Code	Quantity	Amount	Sub-Total in USD($)
Basic Filing:				
Pages:				
Claims:				
Miscellaneous-Filing:				
Petition:				
Patent-Appeals-and-Interference:				
Post-Allowance-and-Post-Issuance:				
Extension-of-Time:				
Extension - 1 month with $0 paid	2251	1	75	75

Description	Fee Code	Quantity	Amount	Sub-Total in USD($)
Miscellaneous:				
			Total in USD ($)	**75**

PTO/SB/06 (07-06)
Approved for use through 1/31/2007. OMB 0651-0032
U.S. Patent and Trademark Office; U.S. DEPARTMENT OF COMMERCE
Under the Paperwork Reduction Act of 1995, no persons are required to respond to a collection of information unless it displays a valid OMB control number.

PATENT APPLICATION FEE DETERMINATION RECORD

Substitute for Form PTO-875

Application or Docket Number	Filing Date	☐ To be Mailed
12/895,610	09/30/2010	

APPLICATION AS FILED – PART I

FOR	(Column 1) NUMBER FILED	(Column 2) NUMBER EXTRA	SMALL ENTITY ☒ RATE ($)	SMALL ENTITY FEE ($)	OR	OTHER THAN SMALL ENTITY RATE ($)	OTHER THAN SMALL ENTITY FEE ($)
☐ BASIC FEE (37 CFR 1.16(a), (b), or (c))	N/A	N/A	N/A			N/A	
☐ SEARCH FEE (37 CFR 1.16(k), (i), or (m))	N/A	N/A	N/A			N/A	
☐ EXAMINATION FEE (37 CFR 1.16(o), (p), or (q))	N/A	N/A	N/A			N/A	
TOTAL CLAIMS (37 CFR 1.16(i))	minus 20 =	*	X $ =		OR	X $ =	
INDEPENDENT CLAIMS (37 CFR 1.16(h))	minus 3 =	*	X $ =			X $ =	
☐ APPLICATION SIZE FEE (37 CFR 1.16(s))	If the specification and drawings exceed 100 sheets of paper, the application size fee due is $250 ($125 for small entity) for each additional 50 sheets or fraction thereof. See 35 U.S.C. 41(a)(1)(G) and 37 CFR 1.16(s).						
☐ MULTIPLE DEPENDENT CLAIM PRESENT (37 CFR 1.16(j))							
* If the difference in column 1 is less than zero, enter "0" in column 2.			TOTAL			TOTAL	

APPLICATION AS AMENDED – PART II

AMENDMENT 03/01/2013

	(Column 1) CLAIMS REMAINING AFTER AMENDMENT		(Column 2) HIGHEST NUMBER PREVIOUSLY PAID FOR	(Column 3) PRESENT EXTRA	SMALL ENTITY RATE ($)	SMALL ENTITY ADDITIONAL FEE ($)	OR	OTHER THAN SMALL ENTITY RATE ($)	OTHER THAN SMALL ENTITY ADDITIONAL FEE ($)
Total (37 CFR 1.16(i))	* 20	Minus	** 20	= 0	X $31 =	0	OR	X $ =	
Independent (37 CFR 1.16(h))	* 2	Minus	***3	= 0	X $125 =	0	OR	X $ =	
☐ Application Size Fee (37 CFR 1.16(s))									
☐ FIRST PRESENTATION OF MULTIPLE DEPENDENT CLAIM (37 CFR 1.16(j))							OR		
					TOTAL ADD'L FEE	0	OR	TOTAL ADD'L FEE	

AMENDMENT

	(Column 1) CLAIMS REMAINING AFTER AMENDMENT		(Column 2) HIGHEST NUMBER PREVIOUSLY PAID FOR	(Column 3) PRESENT EXTRA	RATE ($)	ADDITIONAL FEE ($)		RATE ($)	ADDITIONAL FEE ($)
Total (37 CFR 1.16(i))	*	Minus	**	=	X $ =		OR	X $ =	
Independent (37 CFR 1.16(h))	*	Minus	***	=	X $ =		OR	X $ =	
☐ Application Size Fee (37 CFR 1.16(s))									
☐ FIRST PRESENTATION OF MULTIPLE DEPENDENT CLAIM (37 CFR 1.16(j))							OR		
					TOTAL ADD'L FEE		OR	TOTAL ADD'L FEE	

* If the entry in column 1 is less than the entry in column 2, write "0" in column 3.

** If the "Highest Number Previously Paid For" IN THIS SPACE is less than 20, enter "20".

*** If the "Highest Number Previously Paid For" IN THIS SPACE is less than 3, enter "3".

The "Highest Number Previously Paid For" (Total or Independent) is the highest number found in the appropriate box in column 1.

Legal Instrument Examiner:
/TRACEY BELL/

This collection of information is required by 37 CFR 1.16. The information is required to obtain or retain a benefit by the public which is to file (and by the USPTO to process) an application. Confidentiality is governed by 35 U.S.C. 122 and 37 CFR 1.14. This collection is estimated to take 12 minutes to complete, including gathering, preparing, and submitting the completed application form to the USPTO. Time will vary depending upon the individual case. Any comments on the amount of time you require to complete this form and/or suggestions for reducing this burden, should be sent to the Chief Information Officer, U.S. Patent and Trademark Office, U.S. Department of Commerce, P.O. Box 1450, Alexandria, VA 22313-1450. DO NOT SEND FEES OR COMPLETED FORMS TO THIS ADDRESS. **SEND TO: Commissioner for Patents, P.O. Box 1450, Alexandria, VA 22313-1450.**

If you need assistance in completing the form, call 1-800-PTO-9199 and select option 2.

PATENT APPLICATION FEE DETERMINATION RECORD

Substitute for Form PTO-875

Application or Docket Number
12/895,610

APPLICATION AS FILED - PART I

FOR	(Column 1) NUMBER FILED	(Column 2) NUMBER EXTRA	SMALL ENTITY RATE($)	SMALL ENTITY FEE($)	OR	OTHER THAN SMALL ENTITY RATE($)	OTHER THAN SMALL ENTITY FEE($)
BASIC FEE (37 CFR 1.16(a), (b), or (c))	N/A	N/A	N/A	82		N/A	
SEARCH FEE (37 CFR 1.16(k), (i), or (m))	N/A	N/A	N/A	270		N/A	
EXAMINATION FEE (37 CFR 1.16(o), (p), or (q))	N/A	N/A	N/A	110		N/A	
TOTAL CLAIMS (37 CFR 1.16(i))	20 minus 20 =	*	x 26 =	0.00	OR		
INDEPENDENT CLAIMS (37 CFR 1.16(h))	2 minus 3 =	*	x 110 =	0.00			
APPLICATION SIZE FEE (37 CFR 1.16(s))	If the specification and drawings exceed 100 sheets of paper, the application size fee due is $270 ($135 for small entity) for each additional 50 sheets or fraction thereof. See 35 U.S.C. 41(a)(1)(G) and 37 CFR 1.16(s).			0.00			
MULTIPLE DEPENDENT CLAIM PRESENT (37 CFR 1.16(j))				0.00			
* If the difference in column 1 is less than zero, enter "0" in column 2.			TOTAL	462		TOTAL	

APPLICATION AS AMENDED - PART II

		(Column 1) CLAIMS REMAINING AFTER AMENDMENT		(Column 2) HIGHEST NUMBER PREVIOUSLY PAID FOR	(Column 3) PRESENT EXTRA	SMALL ENTITY RATE($)	SMALL ENTITY ADDITIONAL FEE($)	OR	OTHER THAN SMALL ENTITY RATE($)	OTHER THAN SMALL ENTITY ADDITIONAL FEE($)
AMENDMENT A	Total (37 CFR 1.16(i))	*	Minus	**	=	x =		OR	x =	
AMENDMENT A	Independent (37 CFR 1.16(h))	*	Minus	***	=	x =		OR	x =	
AMENDMENT A	Application Size Fee (37 CFR 1.16(s))									
AMENDMENT A	FIRST PRESENTATION OF MULTIPLE DEPENDENT CLAIM (37 CFR 1.16(j))							OR		
						TOTAL ADD'L FEE		OR	TOTAL ADD'L FEE	

		(Column 1) CLAIMS REMAINING AFTER AMENDMENT		(Column 2) HIGHEST NUMBER PREVIOUSLY PAID FOR	(Column 3) PRESENT EXTRA	RATE($)	ADDITIONAL FEE($)		RATE($)	ADDITIONAL FEE($)
AMENDMENT B	Total (37 CFR 1.16(i))	*	Minus	**	=	x =		OR	x =	
AMENDMENT B	Independent (37 CFR 1.16(h))	*	Minus	***	=	x =		OR	x =	
AMENDMENT B	Application Size Fee (37 CFR 1.16(s))									
AMENDMENT B	FIRST PRESENTATION OF MULTIPLE DEPENDENT CLAIM (37 CFR 1.16(j))							OR		
						TOTAL ADD'L FEE		OR	TOTAL ADD'L FEE	

* If the entry in column 1 is less than the entry in column 2, write "0" in column 3.
** If the "Highest Number Previously Paid For" IN THIS SPACE is less than 20, enter "20".
*** If the "Highest Number Previously Paid For" IN THIS SPACE is less than 3, enter "3".
The "Highest Number Previously Paid For" (Total or Independent) is the highest found in the appropriate box in column 1.

Electronic Patent Application Fee Transmittal

Application Number:	12895610
Filing Date:	30-Sep-2010
Title of Invention:	Archery Bow Cam
First Named Inventor/Applicant Name:	Mathew A. McPherson
Filer:	Jeremy G. Laabs/Elizabeth Deutsch
Attorney Docket Number:	M55.2-14675-US02

Filed as Small Entity

Utility under 35 USC 111(a) Filing Fees

Description	Fee Code	Quantity	Amount	Sub-Total in USD($)
Basic Filing:				
Pages:				
Claims:				
Miscellaneous-Filing:				
Late filing fee for oath or declaration	2051	1	65	65
Petition:				
Patent-Appeals-and-Interference:				
Post-Allowance-and-Post-Issuance:				
Extension-of-Time:				

Description	Fee Code	Quantity	Amount	Sub-Total in USD($)
Miscellaneous:				
			Total in USD ($)	**65**

Electronic Patent Application Fee Transmittal

Application Number:	
Filing Date:	
Title of Invention:	Archery Bow Cam
First Named Inventor/Applicant Name:	Mathew A. McPherson
Filer:	Jeremy G. Laabs
Attorney Docket Number:	M55.2P-14675-US02

Filed as Small Entity

Utility under 35 USC 111(a) Filing Fees

Description	Fee Code	Quantity	Amount	Sub-Total in USD($)
Basic Filing:				
Utility filing Fee (Electronic filing)	4011	1	82	82
Utility Search Fee	2111	1	270	270
Utility Examination Fee	2311	1	110	110
Pages:				
Claims:				
Miscellaneous-Filing:				
Petition:				
Patent-Appeals-and-Interference:				

Description	Fee Code	Quantity	Amount	Sub-Total in USD($)
Post-Allowance-and-Post-Issuance:				
Extension-of-Time:				
Miscellaneous:				
			Total in USD ($)	**462**

Date: 09/30/10

Approved for use through 7/31/2006. OMB 0651-0032
U.S. Patent and Trademark Office; U.S. DEPARTMENT OF COMMERCE

Under the Paperwork Reduction Act of 1995, no persons are required to respond to a collection of information unless it displays a valid OMB control number.

PATENT APPLICATION FEE DETERMINATION RECORD

Substitute for Form PTO-875

Application or Docket Number: 12/895,610

APPLICATION AS FILED – PART I

FOR	(Column 1) NUMBER FILED	(Column 2) NUMBER EXTRA	SMALL ENTITY RATE ($)	SMALL ENTITY FEE ($)	OR	OTHER THAN SMALL ENTITY RATE ($)	OTHER THAN SMALL ENTITY FEE ($)
BASIC FEE (37 CFR 1.16(a), (b), or (c))	N/A	N/A	N/A	82		N/A	
SEARCH FEE (37 CFR 1.16(k), (i), or (m))	N/A	N/A	N/A	270		N/A	
EXAMINATION FEE (37 CFR 1.16(o), (p), or (q))	N/A	N/A	N/A	110		N/A	
TOTAL CLAIMS (37 CFR 1.16(i))	20 minus 20 =		x$26		OR	x$52	
INDEPENDENT CLAIMS (37 CFR 1.16(h))	2 minus 3 =	*	x$110			x$220	
APPLICATION SIZE FEE (37 CFR 1.16(s))	If the specification and drawings exceed 100 sheets of paper, the application size fee due is $260 ($130 for small entity) for each additional 50 sheets or fraction thereof. See 35 U.S.C. 41(a)(1)(G) and 37 CFR						
MULTIPLE DEPENDENT CLAIM PRESENT (37 CFR 1.16(j))			195			390	
			TOTAL	462		TOTAL	

* If the difference in column 1 is less than zero, enter "0" in column 2.

APPLICATION AS AMENDED – PART II

AMENDMENT A

	(Column 1) CLAIMS REMAINING AFTER AMENDMENT		(Column 2) HIGHEST NUMBER PREVIOUSLY PAID FOR	(Column 3) PRESENT EXTRA	SMALL ENTITY RATE ($)	SMALL ENTITY ADDI-TIONAL FEE ($)	OR	OTHER THAN SMALL ENTITY RATE ($)	OTHER THAN SMALL ENTITY ADDI-TIONAL FEE ($)
Total (37 CFR 1.16(i))	*	Minus	**	=	x =		OR	x =	
Independent (37 CFR 1.16(h))	*	Minus	***	=	x =		OR	x =	
Application Size Fee (37 CFR 1.16(s))									
FIRST PRESENTATION OF MULTIPLE DEPENDENT CLAIM (37 CFR 1.16(j))					N/A		OR	N/A	
					TOTAL ADD'T FEE		OR	TOTAL ADD'T FEE	

AMENDMENT B

	(Column 1) CLAIMS REMAINING AFTER AMENDMENT		(Column 2) HIGHEST NUMBER PREVIOUSLY PAID FOR	(Column 3) PRESENT EXTRA	RATE ($)	ADDI-TIONAL FEE ($)	OR	RATE ($)	ADDI-TIONAL FEE ($)
Total (37 CFR 1.16(i))	*	Minus	**	=	x =		OR	x =	
Independent (37 CFR 1.16(h))	*	Minus	***	=	x =		OR	x =	
Application Size Fee (37 CFR 1.16(s))									
FIRST PRESENTATION OF MULTIPLE DEPENDENT CLAIM (37 CFR 1.16(j))					N/A		OR	N/A	
					TOTAL ADD'T FEE		OR	TOTAL ADD'T FEE	

* If the entry in column 1 is less than the entry in column 2, write "0" in column 3.
** If the "Highest Number Previously Paid For" IN THIS SPACE is less than 20, enter "20".
*** If the "Highest Number Previously Paid For" IN THIS SPACE is less than 3, enter "3".
The "Highest Number Previously Paid For" (Total or Independent) is the highest number found in the appropriate box in column 1.

This collection of information is required by 37 CFR 1.16. The information is required to obtain or retain a benefit by the public which is to file (and by the USPTO to process) an application. Confidentiality is governed by 35 U.S.C. 122 and 37 CFR 1.14. This collection is estimated to take 12 minutes to complete, including gathering, preparing, and submitting the completed application form to the USPTO. Time will vary depending upon the individual case. Any comments on the amount of time you require to complete this form and/or suggestions for reducing this burden, should be sent to the Chief Information Officer, U.S. Patent and Trademark Office, U.S. Department of Commerce, P.O. Box 1450, Alexandria, VA 22313-1450. DO NOT SEND FEES OR COMPLETED FORMS TO THIS ADDRESS. **SEND TO: Commissioner for Patents, P.O. Box 1450, Alexandria, VA 22313-1450.**

If you need assistance in completing the form, call 1-800-PTO-9199 and select option 2.

PATENT

IN THE UNITED STATES PATENT AND TRADEMARK OFFICE

In Re Application of:	Mathew A. McPherson
Application No.:	12/895610
Filed:	September 30, 2010
For:	Archery Bow Cam
Group Art Unit:	3711

Commissioner for Patents
P.O. Box 1450
Alexandria, VA 22313-1450

Docket No: M55.2P-14675-US02

PETITION FOR AN EXTENSION OF TIME UNDER 37 CFR §1.136

Applicant(s) hereby request a one month extension of time to respond to the Office Action mailed November 02, 2012. This petition is accompanied by $75.00 as set forth in 37 CFR §1.17 and is filed prior to or with the response.

Any outstanding fee for extension should be charged to our Deposit Account, No. 22-0350.

Respectfully submitted,
VIDAS, ARRETT & STEINKRAUS, P.A.

Date: March 1, 2013

By: /Jeremy G Laabs/
Jeremy G. Laabs
Attorney Reg. No. 53170

Suite 400
6640 Shady Oak Rd.
Eden Prairie, MN 55344-7834
Telephone No: (952) 563-3000
Facsimile No: (952) 563-3001

EAST Search History

EAST Search History (Prior Art)

Ref #	Hits	Search Query	DBs	Default Operator	Plurals	Time Stamp
L1	4	124/25.6,900.ccls. and @pd>="20131108"	US-PGPUB; USPAT; FPRS; EPO; JPO; DERWENT; IBM_TDB	OR	OFF	2014/01/10 10:04
S1	28	("20100089375" | "3486495" | "4060066" | "4064862" | "4461267" | "4515142" | "4519374" | "4739744" | "4774927" | "4838236" | "4986250" | "5040520" | "5368006" | "5791322" | "5791323" | "5934265" | "5960778" | "6082347" | "6360735" | "6446619" | "6516790" | "6691692" | "6871643" | "7082937" | "7188615" | "7305979" | "RE37544" | "RE39880").PN.	US-PGPUB; USPAT	OR	OFF	2012/10/25 15:41
S2	533	(124/25.6,900).ccls.	US-PGPUB; USPAT; FPRS; EPO; JPO; DERWENT; IBM_TDB	OR	OFF	2012/10/25 16:49
S3	111	S2 and ((adjust$5 interchang$5) near5 cam)	US-PGPUB; USPAT; FPRS; EPO; JPO; DERWENT; IBM_TDB	OR	ON	2012/10/25 16:50
S4	57	("20020096159" | "20020144675" | "20020166550" | "20040074485" | "20050193998" | "20050268892" | "20060000463" | "20060169260" | "20080173289" | "20090288650" | "4562824" | "4770154" | "4774927" | "4838236" | "4976250" | "4986250" | "5505185" | "5535727" | "5678529" | "5749351" | "5782229" | "5881705" | "5890480" | "5901692" | "5921227" | "5934265" | "5960778" | "6082346" | "6082347" | "6237582" | "6247466" | "6250293" | "6267108" | "6321736" | "6360735" | "6382201" | "6443139" | "6446619" | "6516790" | "6575153" | "6629522" | "6634348" | "6666202" | "6691692" | "6715479" | "6776148" | "6871643" | "6966314" | "6976484" | "6990970" | "6994079" | "7047958" | "7082937" | "7188615" | "RE39880").PN. OR ("7721721").URPN.	US-PGPUB; USPAT; USOCR	OR	OFF	2012/10/26 09:20
S5	47	("3990425" | "4401097" | "4438753" | "4519374" | "4774927" | "4838236" |	US-PGPUB; USPAT;	OR	OFF	2012/10/26 09:58

		"4926832" | "4926833" | "4967721" | "4976250" | "4986250" | "5092309" | "5301651" | "5368006" | "5433792" | "5505185" | "5649522" | "5678529" | "5782229" | "5791322" | "5934265" | "5975067" | "6082347" | "6112732" | "6516790" | "6666202" | "6688295" | "RE37544").PN. OR ("6990970").URPN.	USOCR			
S6	28	("3841295" | "3851638").PN. OR ("4438753").URPN.	US-PGPUB; USPAT; USOCR	OR	OFF	2012/10/26 10:07
S7	1	("4438753").pn.	US-PGPUB; USPAT	OR	OFF	2012/10/26 11:05
S8	14	(124/25.6,900).ccls. and @pd>="20121225"	US-PGPUB; USPAT; FPRS; EPO; JPO; DERWENT; IBM_TDB	OR	OFF	2013/03/25 11:00
S9	49	124/25.6,900.ccls. and @pd>="20130325"	US-PGPUB; USPAT; FPRS; EPO; JPO; DERWENT; IBM_TDB	OR	OFF	2013/11/07 17:05

EAST Search History (Interference)

Ref #	Hits	Search Query	DBs	Default Operator	Plurals	Time Stamp
L2	25	124/25.6,900.ccls. and (cam and (terminal post)).clm.	USPAT; UPAD	OR	ON	2014/01/10 10:06
S10	41	124/25.6,900.ccls. and (power adj cable).clm.	USPAT; UPAD	OR	ON	2013/11/07 17:12

1/10/2014 10:10:35 AM
C:\Users\jsimms\Documents\EAST\Workspaces\12-895610.wsp

EAST Search History

EAST Search History (Prior Art)

Ref #	Hits	Search Query	DBs	Default Operator	Plurals	Time Stamp
S1	28	("20100089375" | "3486495" | "4060066" | "4064862" | "4461267" | "4515142" | "4519374" | "4739744" | "4774927" | "4838236" | "4986250" | "5040520" | "5368006" | "5791322" | "5791323" | "5934265" | "5960778" | "6082347" | "6360735" | "6446619" | "6516790" | "6691692" | "6871643" | "7082937" | "7188615" | "7305979" | "RE37544" | "RE39880").PN.	US-PGPUB; USPAT	OR	OFF	2012/10/25 15:41
S2	533	(124/25.6,900).ccls.	US-PGPUB; USPAT; FPRS; EPO; JPO; DERWENT; IBM_TDB	OR	OFF	2012/10/25 16:49
S3	111	S2 and ((adjust$5 interchang$5) near5 cam)	US-PGPUB; USPAT; FPRS; EPO; JPO; DERWENT; IBM_TDB	OR	ON	2012/10/25 16:50
S4	57	("20020096159" | "20020144675" | "20020166550" | "20040074485" | "20050193998" | "20050268892" | "20060000463" | "20060169260" | "20080173289" | "20090288650" | "4562824" | "4770154" | "4774927" | "4838236" | "4976250" | "4986250" | "5505185" | "5535727" | "5678529" | "5749351" | "5782229" | "5881705" | "5890480" | "5901692" | "5921227" | "5934265" | "5960778" | "6082346" | "6082347" | "6237582" | "6247466" | "6250293" | "6267108" | "6321736" | "6360735" | "6382201" | "6443139" | "6446619" | "6516790" | "6575153" | "6629522" | "6634348" | "6666202" | "6691692" | "6715479" | "6776148" | "6871643" | "6966314" | "6976484" | "6990970" | "6994079" | "7047958" | "7082937" | "7188615" | "RE39880").PN. OR ("7721721").URPN.	US-PGPUB; USPAT; USOCR	OR	OFF	2012/10/26 09:20
S5	47	("3990425" | "4401097" | "4438753" | "4519374" | "4774927" | "4838236" | "4926832" | "4926833" | "4967721" | "4976250" | "4986250" | "5092309" | "5301651" | "5368006" | "5433792" | "5505185" | "5649522" | "5678529" | "5782229" | "5791322" | "5934265" | "5975067" | "6082347" | "6112732" | "6516790" | "6666202" | "6688295" |	US-PGPUB; USPAT; USOCR	OR	OFF	2012/10/26 09:58

		"RE37544").PN. OR ("6990970").URPN.				
S6	28	("3841295" | "3851638").PN. OR ("4438753").URPN.	US-PGPUB; USPAT; USOCR	OR	OFF	2012/10/26 10:07
S7	1	("4438753").pn.	US-PGPUB; USPAT	OR	OFF	2012/10/26 11:05
S8	14	(124/25.6,900).ccls. and @pd>="20121225"	US-PGPUB; USPAT; FPRS; EPO; JPO; DERWENT; IBM_TDB	OR	OFF	2013/03/25 11:00
S9	49	124/25.6,900.ccls. and @pd>="20130325"	US-PGPUB; USPAT; FPRS; EPO; JPO; DERWENT; IBM_TDB	OR	OFF	2013/11/07 17:05

EAST Search History (Interference)

Ref #	Hits	Search Query	DBs	Default Operator	Plurals	Time Stamp
S10	41	124/25.6,900.ccls. and (power adj cable).clm.	USPAT; UPAD	OR	ON	2013/11/07 17:12

11/8/2013 9:49:52 AM
C:\ Users\ jsimms\ Documents\ EAST\ Workspaces\ 12-895610.wsp

EAST Search History

EAST Search History (Prior Art)

Ref #	Hits	Search Query	DBs	Default Operator	Plurals	Time Stamp
L1	14	(124/25.6,900).ccls. and @pd>="20121225"	US-PGPUB; USPAT; FPRS; EPO; JPO; DERWENT; IBM_TDB	OR	OFF	2013/03/25 11:00
S1	28	("20100089375" | "3486495" | "4060066" | "4064862" | "4461267" | "4515142" | "4519374" | "4739744" | "4774927" | "4838236" | "4986250" | "5040520" | "5368006" | "5791322" | "5791323" | "5934265" | "5960778" | "6082347" | "6360735" | "6446619" | "6516790" | "6691692" | "6871643" | "7082937" | "7188615" | "7305979" | "RE37544" | "RE39880").PN.	US-PGPUB; USPAT	OR	OFF	2012/10/25 15:41
S2	533	(124/25.6,900).ccls.	US-PGPUB; USPAT; FPRS; EPO; JPO; DERWENT; IBM_TDB	OR	OFF	2012/10/25 16:49
S3	111	S2 and ((adjust$5 interchang$5) near5 cam)	US-PGPUB; USPAT; FPRS; EPO; JPO; DERWENT; IBM_TDB	OR	ON	2012/10/25 16:50
S4	57	("20020096159" | "20020144675" | "20020166550" | "20040074485" | "20050193998" | "20050268892" | "20060000463" | "20060169260" | "20080173289" | "20090288650" | "4562824" | "4770154" | "4774927" | "4838236" | "4976250" | "4986250" | "5505185" | "5535727" | "5678529" | "5749351" | "5782229" | "5881705" | "5890480" | "5901692" | "5921227" | "5934265" | "5960778" | "6082346" | "6082347" | "6237582" | "6247466" | "6250293" | "6267108" | "6321736" | "6360735" | "6382201" | "6443139" | "6446619" | "6516790" | "6575153" | "6629522" | "6634348" | "6666202" | "6691692" | "6715479" | "6776148" | "6871643" | "6966314" | "6976484" | "6990970" | "6994079" | "7047958" | "7082937" | "7188615" | "RE39880").PN. OR ("7721721").URPN.	US-PGPUB; USPAT; USOCR	OR	OFF	2012/10/26 09:20
S5	47	("3990425" | "4401097" | "4438753" | "4519374" | "4774927" | "4838236" |	US-PGPUB; USPAT;	OR	OFF	2012/10/26 09:58

		"4926832" | "4926833" | "4967721" | "4976250" | "4986250" | "5092309" | "5301651" | "5368006" | "5433792" | "5505185" | "5649522" | "5678529" | "5782229" | "5791322" | "5934265" | "5975067" | "6082347" | "6112732" | "6516790" | "6666202" | "6688295" | "RE37544").PN. OR ("6990970").URPN.	USOCR			
S6	28	("3841295" | "3851638").PN. OR ("4438753").URPN.	US-PGPUB; USPAT; USOCR	OR	OFF	2012/10/26 10:07
S7	1	("4438753").pn.	US-PGPUB; USPAT	OR	OFF	2012/10/26 11:05

3/25/2013 11:04:54 AM
C:\Users\jsimms\Documents\EAST\Workspaces\12-895610.wsp

EAST Search History

EAST Search History (Prior Art)

Ref #	Hits	Search Query	DBs	Default Operator	Plurals	Time Stamp
S1	28	("20100089375" | "3486495" | "4060066" | "4064862" | "4461267" | "4515142" | "4519374" | "4739744" | "4774927" | "4838236" | "4986250" | "5040520" | "5368006" | "5791322" | "5791323" | "5934265" | "5960778" | "6082347" | "6360735" | "6446619" | "6516790" | "6691692" | "6871643" | "7082937" | "7188615" | "7305979" | "RE37544" | "RE39880").PN.	US-PGPUB; USPAT	OR	OFF	2012/10/25 15:41
S2	533	(124/25.6,900).ccls.	US-PGPUB; USPAT; FPRS; EPO; JPO; DERWENT; IBM_TDB	OR	OFF	2012/10/25 16:49
S3	111	S2 and ((adjust$5 interchang$5) near5 cam)	US-PGPUB; USPAT; FPRS; EPO; JPO; DERWENT; IBM_TDB	OR	ON	2012/10/25 16:50
S4	57	("20020096159" | "20020144675" | "20020166550" | "20040074485" | "20050193998" | "20050268892" | "20060000463" | "20060169260" | "20080173289" | "20090288650" | "4562824" | "4770154" | "4774927" | "4838236" | "4976250" | "4986250" | "5505185" | "5535727" | "5678529" | "5749351" | "5782229" | "5881705" | "5890480" | "5901692" | "5921227" | "5934265" | "5960778" | "6082346" | "6082347" | "6237582" | "6247466" | "6250293" | "6267108" | "6321736" | "6360735" | "6382201" | "6443139" | "6446619" | "6516790" | "6575153" | "6629522" | "6634348" | "6666202" | "6691692" | "6715479" | "6776148" | "6871643" | "6966314" | "6976484" | "6990970" | "6994079" | "7047958" | "7082937" | "7188615" | "RE39880").PN. OR ("7721721").URPN.	US-PGPUB; USPAT; USOCR	OR	OFF	2012/10/26 09:20
S5	47	("3990425" | "4401097" | "4438753" | "4519374" | "4774927" | "4838236" | "4926832" | "4926833" | "4967721" | "4976250" | "4986250" | "5092309" | "5301651" | "5368006" | "5433792" | "5505185" | "5649522" | "5678529" | "5782229" | "5791322" | "5934265" | "5975067" | "6082347" | "6112732" | "6516790" | "6666202" | "6688295" |	US-PGPUB; USPAT; USOCR	OR	OFF	2012/10/26 09:58

		"RE37544").PN. OR ("6990970").URPN.				
S6	28	("3841295" | "3851638").PN. OR ("4438753").URPN.	US-PGPUB; USPAT; USOCR	OR	OFF	2012/10/26 10:07
S7	1	("4438753").pn.	US-PGPUB; USPAT	OR	OFF	2012/10/26 11:05

10/26/2012 3:03:07 PM
C:\Users\jsimms\Documents\EAST\Workspaces\12-895610.wsp

Electronic Acknowledgement Receipt

EFS ID:	18122880
Application Number:	12895610
International Application Number:	
Confirmation Number:	8071
Title of Invention:	Archery Bow Cam
First Named Inventor/Applicant Name:	Mathew A. McPherson
Customer Number:	490
Filer:	Jeremy G. Laabs/Samantha Painschab
Filer Authorized By:	Jeremy G. Laabs
Attorney Docket Number:	M55.2P-14675-US02
Receipt Date:	05-FEB-2014
Filing Date:	30-SEP-2010
Time Stamp:	15:59:32
Application Type:	Utility under 35 USC 111(a)

Payment information:

Submitted with Payment	yes
Payment Type	Credit Card
Payment was successfully received in RAM	$480
RAM confirmation Number	2111
Deposit Account	
Authorized User	

File Listing:

Document Number	Document Description	File Name	File Size(Bytes)/ Message Digest	Multi Part /.zip	Pages (if appl.)

IPR2024-00523
Ravin EX1014 Page 122

1	Transmittal Letter	14675US02_tra_20140205.pdf	80200 b00475c382cad2690df082e4351b601c984e4272	no	1
Warnings:					
Information:					
2	Issue Fee Payment (PTO-85B)	14675US02_IssueFeeTransmittal_20140205.pdf	116344 c08809ac8b9770808a3fe61a10a00f36329aa67f	no	1
Warnings:					
Information:					
3	Fee Worksheet (SB06)	fee-info.pdf	30081 83141d0bc27ca15147420b6b8808f6c74307ab41	no	2
Warnings:					
Information:					
		Total Files Size (in bytes):	226625		

This Acknowledgement Receipt evidences receipt on the noted date by the USPTO of the indicated documents, characterized by the applicant, and including page counts, where applicable. It serves as evidence of receipt similar to a Post Card, as described in MPEP 503.

<u>New Applications Under 35 U.S.C. 111</u>
If a new application is being filed and the application includes the necessary components for a filing date (see 37 CFR 1.53(b)-(d) and MPEP 506), a Filing Receipt (37 CFR 1.54) will be issued in due course and the date shown on this Acknowledgement Receipt will establish the filing date of the application.

<u>National Stage of an International Application under 35 U.S.C. 371</u>
If a timely submission to enter the national stage of an international application is compliant with the conditions of 35 U.S.C. 371 and other applicable requirements a Form PCT/DO/EO/903 indicating acceptance of the application as a national stage submission under 35 U.S.C. 371 will be issued in addition to the Filing Receipt, in due course.

<u>New International Application Filed with the USPTO as a Receiving Office</u>
If a new international application is being filed and the international application includes the necessary components for an international filing date (see PCT Article 11 and MPEP 1810), a Notification of the International Application Number and of the International Filing Date (Form PCT/RO/105) will be issued in due course, subject to prescriptions concerning national security, and the date shown on this Acknowledgement Receipt will establish the international filing date of the application.

Electronic Acknowledgement Receipt

EFS ID:	17882310
Application Number:	12895610
International Application Number:	
Confirmation Number:	8071
Title of Invention:	Archery Bow Cam
First Named Inventor/Applicant Name:	Mathew A. McPherson
Customer Number:	490
Filer:	Jeremy G. Laabs/Samantha Painschab
Filer Authorized By:	Jeremy G. Laabs
Attorney Docket Number:	M55.2P-14675-US02
Receipt Date:	10-JAN-2014
Filing Date:	30-SEP-2010
Time Stamp:	15:40:37
Application Type:	Utility under 35 USC 111(a)

Payment information:

Submitted with Payment	no

File Listing:

Document Number	Document Description	File Name	File Size(Bytes)/ Message Digest	Multi Part /.zip	Pages (if appl.)
1	Transmittal Letter	14675US02_dwg_20140107.pdf	68099 e41c416fa229f97a27bdb645fcaaf1fd09bd2d38	no	1

Warnings:

Information:

2	Drawings-only black and white line drawings	14675US02_replacementl_dwgs_20140108.pdf	741940 4086a973b8c0dc5e1b2c2586d3da116ce9bf3806	no	7
Warnings:					
Information:					
			Total Files Size (in bytes):	810039	

This Acknowledgement Receipt evidences receipt on the noted date by the USPTO of the indicated documents, characterized by the applicant, and including page counts, where applicable. It serves as evidence of receipt similar to a Post Card, as described in MPEP 503.

<u>New Applications Under 35 U.S.C. 111</u>
If a new application is being filed and the application includes the necessary components for a filing date (see 37 CFR 1.53(b)-(d) and MPEP 506), a Filing Receipt (37 CFR 1.54) will be issued in due course and the date shown on this Acknowledgement Receipt will establish the filing date of the application.

<u>National Stage of an International Application under 35 U.S.C. 371</u>
If a timely submission to enter the national stage of an international application is compliant with the conditions of 35 U.S.C. 371 and other applicable requirements a Form PCT/DO/EO/903 indicating acceptance of the application as a national stage submission under 35 U.S.C. 371 will be issued in addition to the Filing Receipt, in due course.

<u>New International Application Filed with the USPTO as a Receiving Office</u>
If a new international application is being filed and the international application includes the necessary components for an international filing date (see PCT Article 11 and MPEP 1810), a Notification of the International Application Number and of the International Filing Date (Form PCT/RO/105) will be issued in due course, subject to prescriptions concerning national security, and the date shown on this Acknowledgement Receipt will establish the international filing date of the application.

Electronic Acknowledgement Receipt

EFS ID:	17730184
Application Number:	12895610
International Application Number:	
Confirmation Number:	8071
Title of Invention:	Archery Bow Cam
First Named Inventor/Applicant Name:	Mathew A. McPherson
Customer Number:	490
Filer:	Jeremy G. Laabs/Samantha Painschab
Filer Authorized By:	Jeremy G. Laabs
Attorney Docket Number:	M55.2P-14675-US02
Receipt Date:	20-DEC-2013
Filing Date:	30-SEP-2010
Time Stamp:	16:45:38
Application Type:	Utility under 35 USC 111(a)

Payment information:

Submitted with Payment	no

File Listing:

Document Number	Document Description	File Name	File Size(Bytes)/ Message Digest	Multi Part /.zip	Pages (if appl.)
1	Transmittal Letter	14675US02_tra_20131220.pdf	79894 e0953a5f61837b9e7bd197c00c6bd06ee6a3bd8a	no	1

Warnings:

Information:

2	Amendment/Req. Reconsideration-After Non-Final Reject	14675US02_amd_20131212.pdf	108770 81dbf7b4734bea96be0afed56325b1a9b033b27b	no	12
Warnings:					
Information:					
3	Drawings-only black and white line drawings	14675US02_Replacement_Sheet_20131220.pdf	162516 0defa31c6d0821fc68bef23c94977b5dc1e4f48b	no	1
Warnings:					
Information:					
			Total Files Size (in bytes):	351180	

This Acknowledgement Receipt evidences receipt on the noted date by the USPTO of the indicated documents, characterized by the applicant, and including page counts, where applicable. It serves as evidence of receipt similar to a Post Card, as described in MPEP 503.

New Applications Under 35 U.S.C. 111
If a new application is being filed and the application includes the necessary components for a filing date (see 37 CFR 1.53(b)-(d) and MPEP 506), a Filing Receipt (37 CFR 1.54) will be issued in due course and the date shown on this Acknowledgement Receipt will establish the filing date of the application.

National Stage of an International Application under 35 U.S.C. 371
If a timely submission to enter the national stage of an international application is compliant with the conditions of 35 U.S.C. 371 and other applicable requirements a Form PCT/DO/EO/903 indicating acceptance of the application as a national stage submission under 35 U.S.C. 371 will be issued in addition to the Filing Receipt, in due course.

New International Application Filed with the USPTO as a Receiving Office
If a new international application is being filed and the international application includes the necessary components for an international filing date (see PCT Article 11 and MPEP 1810), a Notification of the International Application Number and of the International Filing Date (Form PCT/RO/105) will be issued in due course, subject to prescriptions concerning national security, and the date shown on this Acknowledgement Receipt will establish the international filing date of the application.

Electronic Acknowledgement Receipt

EFS ID:	16192022
Application Number:	12895610
International Application Number:	
Confirmation Number:	8071
Title of Invention:	Archery Bow Cam
First Named Inventor/Applicant Name:	Mathew A. McPherson
Customer Number:	490
Filer:	Jeremy G. Laabs
Filer Authorized By:	
Attorney Docket Number:	M55.2P-14675-US02
Receipt Date:	01-JUL-2013
Filing Date:	30-SEP-2010
Time Stamp:	11:29:33
Application Type:	Utility under 35 USC 111(a)

Payment information:

Submitted with Payment	yes
Payment Type	Credit Card
Payment was successfully received in RAM	$640
RAM confirmation Number	12894
Deposit Account	
Authorized User	

File Listing:

Document Number	Document Description	File Name	File Size(Bytes)/ Message Digest	Multi Part /.zip	Pages (if appl.)

IPR2024-00523
Ravin EX1014 Page 128

1	Transmittal Letter	14675US02_tra_20130628.pdf	102975 c60a060d6fef0aa74a385bb8576c7d1f0254801a	no	1
Warnings:					
Information:					
2	Request for Continued Examination (RCE)	14675US02_RCE_20130628.pdf	697810 4daae10a91703ffd81782a028620c79218c6b875	no	3
Warnings:					
Information:					
3		14675US02_amd_20130628.pdf	116328 8d0e57a868c72b00f51477342ee5acba3c68f95e	yes	6
	Multipart Description/PDF files in .zip description				
	Document Description		**Start**	**End**	
	Amendment Submitted/Entered with Filing of CPA/RCE		1	1	
	Claims		2	5	
	Applicant Arguments/Remarks Made in an Amendment		6	6	
Warnings:					
Information:					
4	Fee Worksheet (SB06)	fee-info.pdf	31928 d7846984e90746b333fd380c2ad779cfb3cec8da	no	2
Warnings:					
Information:					
		Total Files Size (in bytes):	949041		

This Acknowledgement Receipt evidences receipt on the noted date by the USPTO of the indicated documents, characterized by the applicant, and including page counts, where applicable. It serves as evidence of receipt similar to a Post Card, as described in MPEP 503.

New Applications Under 35 U.S.C. 111
If a new application is being filed and the application includes the necessary components for a filing date (see 37 CFR 1.53(b)-(d) and MPEP 506), a Filing Receipt (37 CFR 1.54) will be issued in due course and the date shown on this Acknowledgement Receipt will establish the filing date of the application.

National Stage of an International Application under 35 U.S.C. 371
If a timely submission to enter the national stage of an international application is compliant with the conditions of 35 U.S.C. 371 and other applicable requirements a Form PCT/DO/EO/903 indicating acceptance of the application as a national stage submission under 35 U.S.C. 371 will be issued in addition to the Filing Receipt, in due course.

New International Application Filed with the USPTO as a Receiving Office
If a new international application is being filed and the international application includes the necessary components for an international filing date (see PCT Article 11 and MPEP 1810), a Notification of the International Application Number and of the International Filing Date (Form PCT/RO/105) will be issued in due course, subject to prescriptions concerning national security, and the date shown on this Acknowledgement Receipt will establish the international filing date of the application.

Electronic Acknowledgement Receipt

EFS ID:	15900240
Application Number:	12895610
International Application Number:	
Confirmation Number:	8071
Title of Invention:	Archery Bow Cam
First Named Inventor/Applicant Name:	Mathew A. McPherson
Customer Number:	490
Filer:	Jeremy G. Laabs
Filer Authorized By:	
Attorney Docket Number:	M55.2P-14675-US02
Receipt Date:	29-MAY-2013
Filing Date:	30-SEP-2010
Time Stamp:	19:10:47
Application Type:	Utility under 35 USC 111(a)

Payment information:

Submitted with Payment	no

File Listing:

Document Number	Document Description	File Name	File Size(Bytes)/ Message Digest	Multi Part /.zip	Pages (if appl.)
1		14675US02_amd_docs_20130529.pdf	128726 df0d05707db19634f8e4188ba3cf2a92196ec4c9	yes	8

	Multipart Description/PDF files in .zip description		
	Document Description	**Start**	**End**
	Transmittal Letter	1	1
	Amendment After Final	2	8

Warnings:	
Information:	
Total Files Size (in bytes):	128726

This Acknowledgement Receipt evidences receipt on the noted date by the USPTO of the indicated documents, characterized by the applicant, and including page counts, where applicable. It serves as evidence of receipt similar to a Post Card, as described in MPEP 503.

New Applications Under 35 U.S.C. 111
If a new application is being filed and the application includes the necessary components for a filing date (see 37 CFR 1.53(b)-(d) and MPEP 506), a Filing Receipt (37 CFR 1.54) will be issued in due course and the date shown on this Acknowledgement Receipt will establish the filing date of the application.

National Stage of an International Application under 35 U.S.C. 371
If a timely submission to enter the national stage of an international application is compliant with the conditions of 35 U.S.C. 371 and other applicable requirements a Form PCT/DO/EO/903 indicating acceptance of the application as a national stage submission under 35 U.S.C. 371 will be issued in addition to the Filing Receipt, in due course.

New International Application Filed with the USPTO as a Receiving Office
If a new international application is being filed and the international application includes the necessary components for an international filing date (see PCT Article 11 and MPEP 1810), a Notification of the International Application Number and of the International Filing Date (Form PCT/RO/105) will be issued in due course, subject to prescriptions concerning national security, and the date shown on this Acknowledgement Receipt will establish the international filing date of the application.

Electronic Acknowledgement Receipt

EFS ID:	15099648
Application Number:	12895610
International Application Number:	
Confirmation Number:	8071
Title of Invention:	Archery Bow Cam
First Named Inventor/Applicant Name:	Mathew A. McPherson
Customer Number:	490
Filer:	Jeremy G. Laabs
Filer Authorized By:	
Attorney Docket Number:	M55.2P-14675-US02
Receipt Date:	01-MAR-2013
Filing Date:	30-SEP-2010
Time Stamp:	20:59:35
Application Type:	Utility under 35 USC 111(a)

Payment information:

Submitted with Payment	yes
Payment Type	Credit Card
Payment was successfully received in RAM	$75
RAM confirmation Number	7616
Deposit Account	
Authorized User	

File Listing:

Document Number	Document Description	File Name	File Size(Bytes)/ Message Digest	Multi Part /.zip	Pages (if appl.)

IPR2024-00523
Ravin EX1014 Page 133

1		14675US02_amd_docs_20130301.pdf	187414 a256b77441dc6fd3d611f967ad839cf682714be1	yes	12
	Multipart Description/PDF files in .zip description				
	Document Description		**Start**	**End**	
	Transmittal Letter		1	1	
	Amendment/Req. Reconsideration-After Non-Final Reject		2	11	
	Extension of Time		12	12	
Warnings:					
Information:					
2	Fee Worksheet (SB06)	fee-info.pdf	29901 8c3027bf97b4c189b0feede5b80b39748cb6889a	no	2
Warnings:					
Information:					
		Total Files Size (in bytes):	217315		

This Acknowledgement Receipt evidences receipt on the noted date by the USPTO of the indicated documents, characterized by the applicant, and including page counts, where applicable. It serves as evidence of receipt similar to a Post Card, as described in MPEP 503.

<u>New Applications Under 35 U.S.C. 111</u>
If a new application is being filed and the application includes the necessary components for a filing date (see 37 CFR 1.53(b)-(d) and MPEP 506), a Filing Receipt (37 CFR 1.54) will be issued in due course and the date shown on this Acknowledgement Receipt will establish the filing date of the application.

<u>National Stage of an International Application under 35 U.S.C. 371</u>
If a timely submission to enter the national stage of an international application is compliant with the conditions of 35 U.S.C. 371 and other applicable requirements a Form PCT/DO/EO/903 indicating acceptance of the application as a national stage submission under 35 U.S.C. 371 will be issued in addition to the Filing Receipt, in due course.

<u>New International Application Filed with the USPTO as a Receiving Office</u>
If a new international application is being filed and the international application includes the necessary components for an international filing date (see PCT Article 11 and MPEP 1810), a Notification of the International Application Number and of the International Filing Date (Form PCT/RO/105) will be issued in due course, subject to prescriptions concerning national security, and the date shown on this Acknowledgement Receipt will establish the international filing date of the application.

Electronic Acknowledgement Receipt

EFS ID:	9162191
Application Number:	12895610
International Application Number:	
Confirmation Number:	8071
Title of Invention:	Archery Bow Cam
First Named Inventor/Applicant Name:	Mathew A. McPherson
Customer Number:	00490
Filer:	Jeremy G. Laabs
Filer Authorized By:	
Attorney Docket Number:	M55.2P-14675-US02
Receipt Date:	04-JAN-2011
Filing Date:	30-SEP-2010
Time Stamp:	18:33:46
Application Type:	Utility under 35 USC 111(a)

Payment information:

Submitted with Payment	no

File Listing:

Document Number	Document Description	File Name	File Size(Bytes)/ Message Digest	Multi Part /.zip	Pages (if appl.)
1	Miscellaneous Incoming Letter	14675US02_tra_20110104.pdf	79558 5ebbb1a34cb5c1d4681b0e30932f2744bb6 19023	no	1

Warnings:

Information:

2	Information Disclosure Statement (IDS) Filed (SB/08)	14675US02_ids_20110104.pdf	612587 4dbc3983acee09312674864e53803ce80eebc1b8	no	6

Warnings:

Information:

Total Files Size (in bytes):	692145

This Acknowledgement Receipt evidences receipt on the noted date by the USPTO of the indicated documents, characterized by the applicant, and including page counts, where applicable. It serves as evidence of receipt similar to a Post Card, as described in MPEP 503.

New Applications Under 35 U.S.C. 111
If a new application is being filed and the application includes the necessary components for a filing date (see 37 CFR 1.53(b)-(d) and MPEP 506), a Filing Receipt (37 CFR 1.54) will be issued in due course and the date shown on this Acknowledgement Receipt will establish the filing date of the application.

National Stage of an International Application under 35 U.S.C. 371
If a timely submission to enter the national stage of an international application is compliant with the conditions of 35 U.S.C. 371 and other applicable requirements a Form PCT/DO/EO/903 indicating acceptance of the application as a national stage submission under 35 U.S.C. 371 will be issued in addition to the Filing Receipt, in due course.

New International Application Filed with the USPTO as a Receiving Office
If a new international application is being filed and the international application includes the necessary components for an international filing date (see PCT Article 11 and MPEP 1810), a Notification of the International Application Number and of the International Filing Date (Form PCT/RO/105) will be issued in due course, subject to prescriptions concerning national security, and the date shown on this Acknowledgement Receipt will establish the international filing date of the application.

Electronic Acknowledgement Receipt

EFS ID:	9045676
Application Number:	12895610
International Application Number:	
Confirmation Number:	8071
Title of Invention:	Archery Bow Cam
First Named Inventor/Applicant Name:	Mathew A. McPherson
Customer Number:	00490
Filer:	Jeremy G. Laabs
Filer Authorized By:	
Attorney Docket Number:	M55.2-14675-US02
Receipt Date:	15-DEC-2010
Filing Date:	30-SEP-2010
Time Stamp:	20:00:57
Application Type:	Utility under 35 USC 111(a)

Payment information:

Submitted with Payment	yes
Payment Type	Credit Card
Payment was successfully received in RAM	$65
RAM confirmation Number	6846
Deposit Account	
Authorized User	

File Listing:

Document Number	Document Description	File Name	File Size(Bytes)/ Message Digest	Multi Part /.zip	Pages (if appl.)

IPR2024-00523
Ravin EX1014 Page 137

1		14675US02_missing_docs_20101215.pdf	190703 9290f18837cb8f27382f4ced514d403614b4230a	yes	4

	Multipart Description/PDF files in .zip description		
	Document Description	**Start**	**End**
	Miscellaneous Incoming Letter	1	1
	Applicant Response to Pre-Exam Formalities Notice	2	2
	Oath or Declaration filed	3	3
	Power of Attorney	4	4

Warnings:

Information:

2	Fee Worksheet (PTO-875)	fee-info.pdf	30230 7a1015471e630f53c986056a312c0b7d1180e17e	no	2

Warnings:

Information:

Total Files Size (in bytes):	220933

This Acknowledgement Receipt evidences receipt on the noted date by the USPTO of the indicated documents, characterized by the applicant, and including page counts, where applicable. It serves as evidence of receipt similar to a Post Card, as described in MPEP 503.

New Applications Under 35 U.S.C. 111
If a new application is being filed and the application includes the necessary components for a filing date (see 37 CFR 1.53(b)-(d) and MPEP 506), a Filing Receipt (37 CFR 1.54) will be issued in due course and the date shown on this Acknowledgement Receipt will establish the filing date of the application.

National Stage of an International Application under 35 U.S.C. 371
If a timely submission to enter the national stage of an international application is compliant with the conditions of 35 U.S.C. 371 and other applicable requirements a Form PCT/DO/EO/903 indicating acceptance of the application as a national stage submission under 35 U.S.C. 371 will be issued in addition to the Filing Receipt, in due course.

New International Application Filed with the USPTO as a Receiving Office
If a new international application is being filed and the international application includes the necessary components for an international filing date (see PCT Article 11 and MPEP 1810), a Notification of the International Application Number and of the International Filing Date (Form PCT/RO/105) will be issued in due course, subject to prescriptions concerning national security, and the date shown on this Acknowledgement Receipt will establish the international filing date of the application.

Electronic Acknowledgement Receipt

EFS ID:	8538243
Application Number:	12895610
International Application Number:	
Confirmation Number:	8071
Title of Invention:	Archery Bow Cam
First Named Inventor/Applicant Name:	Mathew A. McPherson
Customer Number:	00490
Filer:	Jeremy G. Laabs
Filer Authorized By:	
Attorney Docket Number:	M55.2P-14675-US02
Receipt Date:	30-SEP-2010
Filing Date:	
Time Stamp:	19:27:26
Application Type:	Utility under 35 USC 111(a)

Payment information:

Submitted with Payment	yes
Payment Type	Credit Card
Payment was successfully received in RAM	$462
RAM confirmation Number	12279
Deposit Account	
Authorized User	

File Listing:

Document Number	Document Description	File Name	File Size(Bytes)/ Message Digest	Multi Part /.zip	Pages (if appl.)

IPR2024-00523
Ravin EX1014 Page 139

1	Application Data Sheet	14675US02_appdatasheet_20100929.pdf	1030701 629e0ad2687ebf0fff19a3004d139cc3c46c1f78	no	4
Warnings:					
Information:					
2	Nonpublication request from applicant.	14675US02_nonpublication_20100929.pdf	234598 40faf63bfefb8fc27cd778a9aaa0c2530ec0a180	no	2
Warnings:					
Information:					
3	Authorization for Extension of Time all replies	14675US02_pet_20100929.pdf	70843 cf1d99549f6d93271b176513581560ec6a07ad9d	no	1
Warnings:					
Information:					
4	Miscellaneous Incoming Letter	14675US02_tra_20100929.pdf	79517 6ce4c4f9e3c7396dcb0a604883661935d91b5714	no	1
Warnings:					
Information:					
5		14675US02_application_docs_20100926.pdf	260550 add6878d019f7f09ac66a92ee3f7214a2428ffca	yes	21
	Multipart Description/PDF files in .zip description				
	Document Description		**Start**	**End**	
	Specification		1	9	
	Claims		10	13	
	Abstract		14	14	
	Drawings-only black and white line drawings		15	21	
Warnings:					
Information:					
6	Fee Worksheet (PTO-875)	fee-info.pdf	32791 bc53ef575fb5e5101a6743a2580406203f16640a	no	2
Warnings:					
Information:					
		Total Files Size (in bytes):	1709000		

This Acknowledgement Receipt evidences receipt on the noted date by the USPTO of the indicated documents, characterized by the applicant, and including page counts, where applicable. It serves as evidence of receipt similar to a Post Card, as described in MPEP 503.

New Applications Under 35 U.S.C. 111
If a new application is being filed and the application includes the necessary components for a filing date (see 37 CFR 1.53(b)-(d) and MPEP 506), a Filing Receipt (37 CFR 1.54) will be issued in due course and the date shown on this Acknowledgement Receipt will establish the filing date of the application.

National Stage of an International Application under 35 U.S.C. 371
If a timely submission to enter the national stage of an international application is compliant with the conditions of 35 U.S.C. 371 and other applicable requirements a Form PCT/DO/EO/903 indicating acceptance of the application as a national stage submission under 35 U.S.C. 371 will be issued in addition to the Filing Receipt, in due course.

New International Application Filed with the USPTO as a Receiving Office
If a new international application is being filed and the international application includes the necessary components for an international filing date (see PCT Article 11 and MPEP 1810), a Notification of the International Application Number and of the International Filing Date (Form PCT/RO/105) will be issued in due course, subject to prescriptions concerning national security, and the date shown on this Acknowledgement Receipt will establish the international filing date of the application.

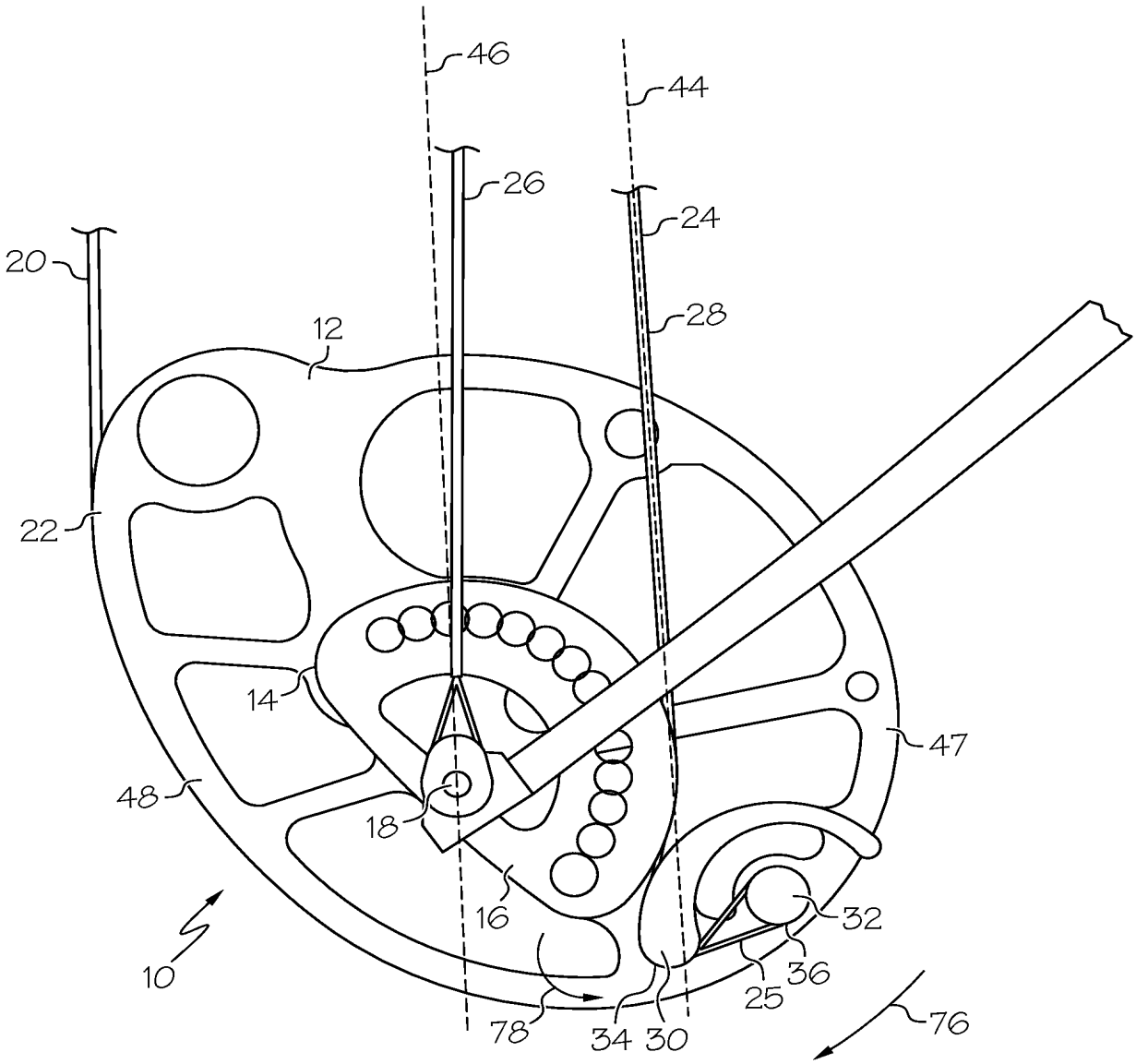

FIG. 1

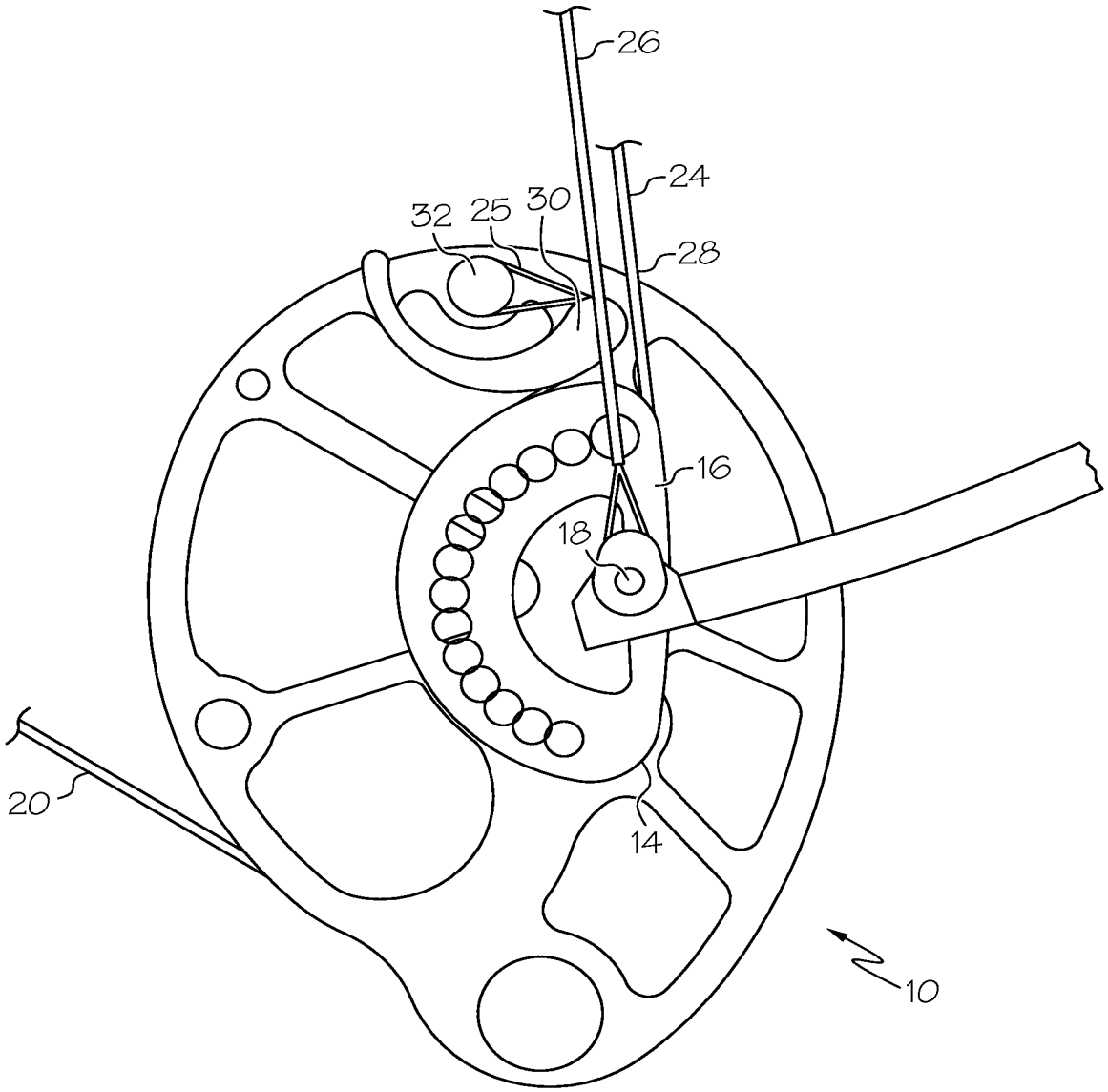

FIG. 2

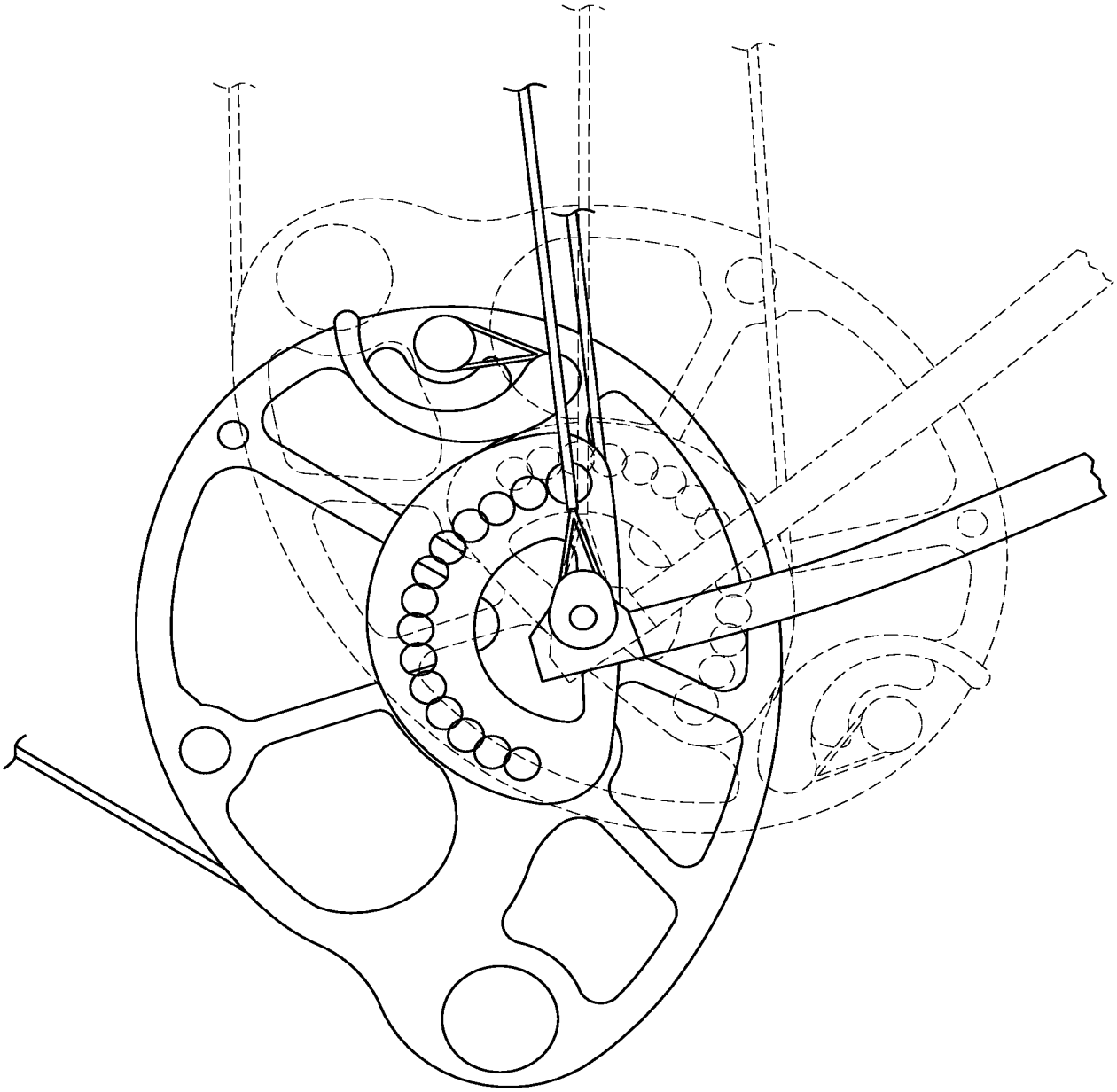

FIG. 3

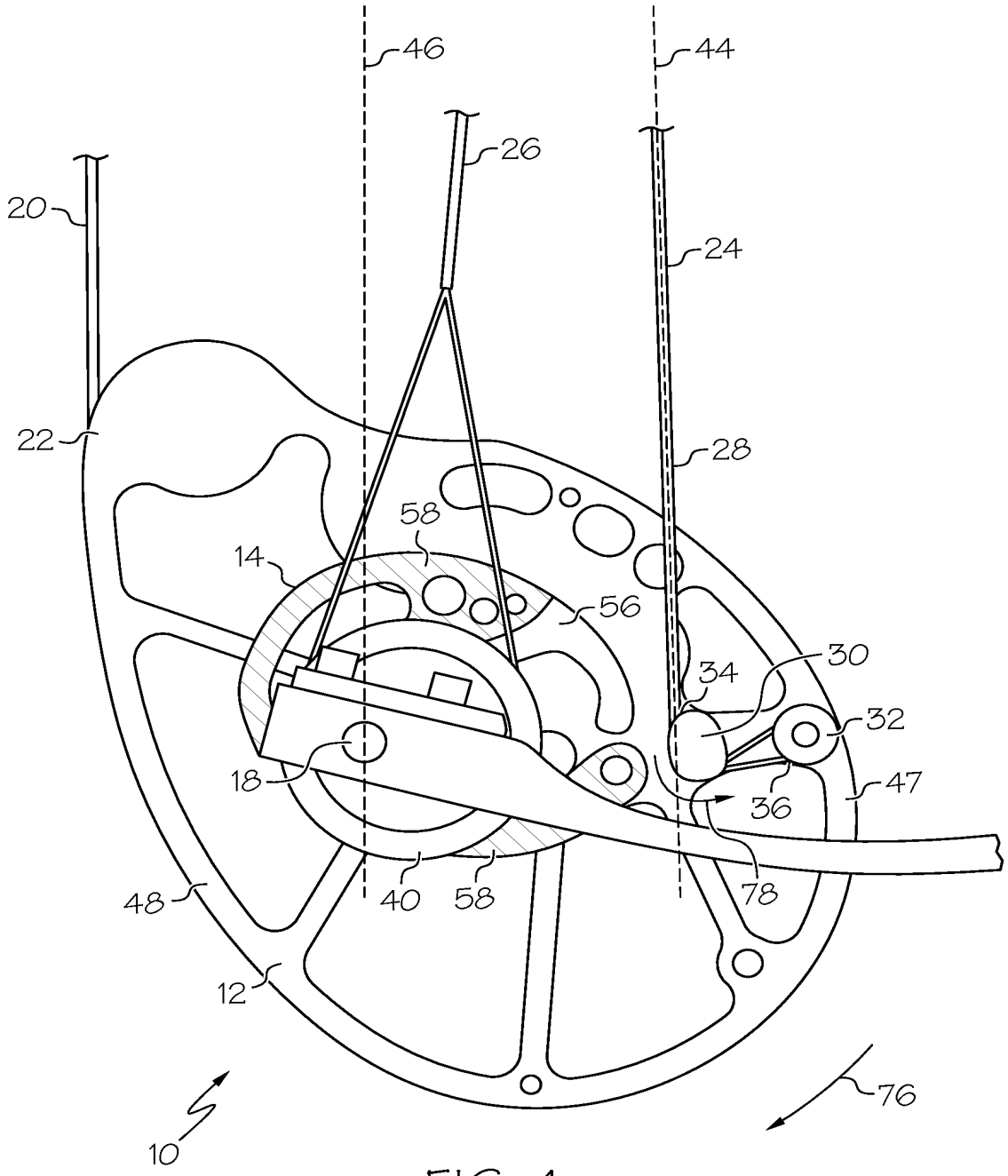

FIG. 4

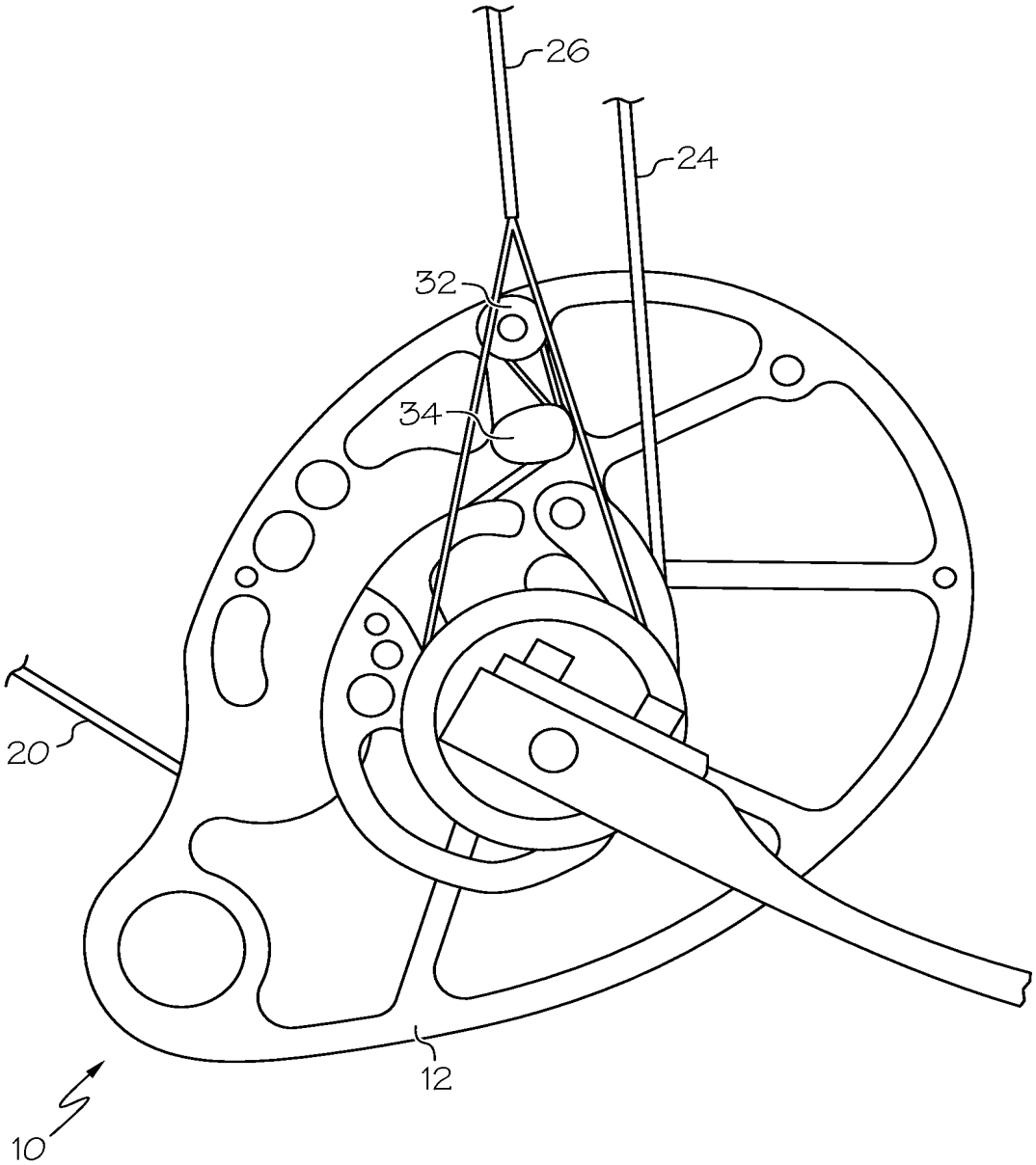

FIG. 5

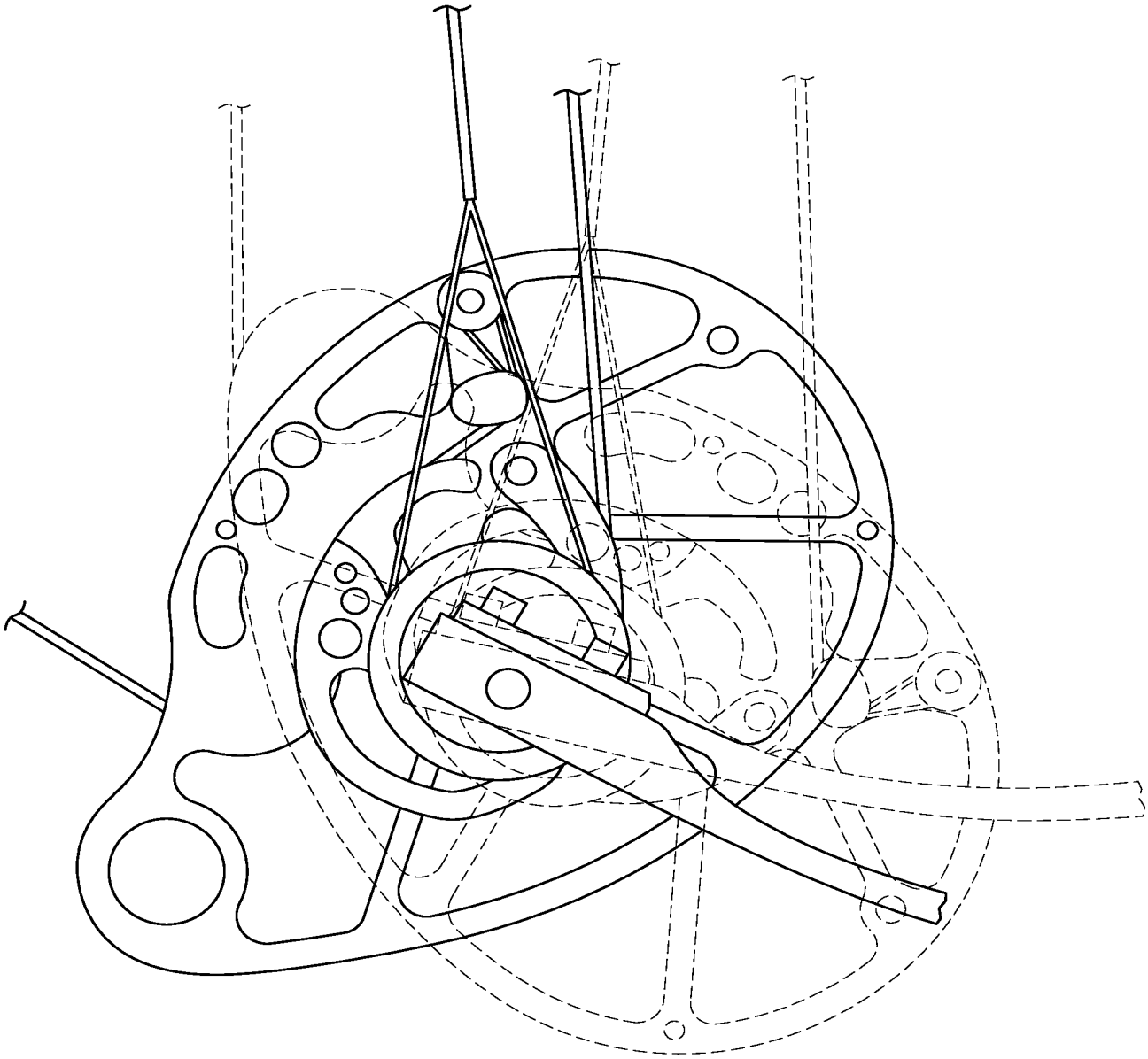

FIG. 6

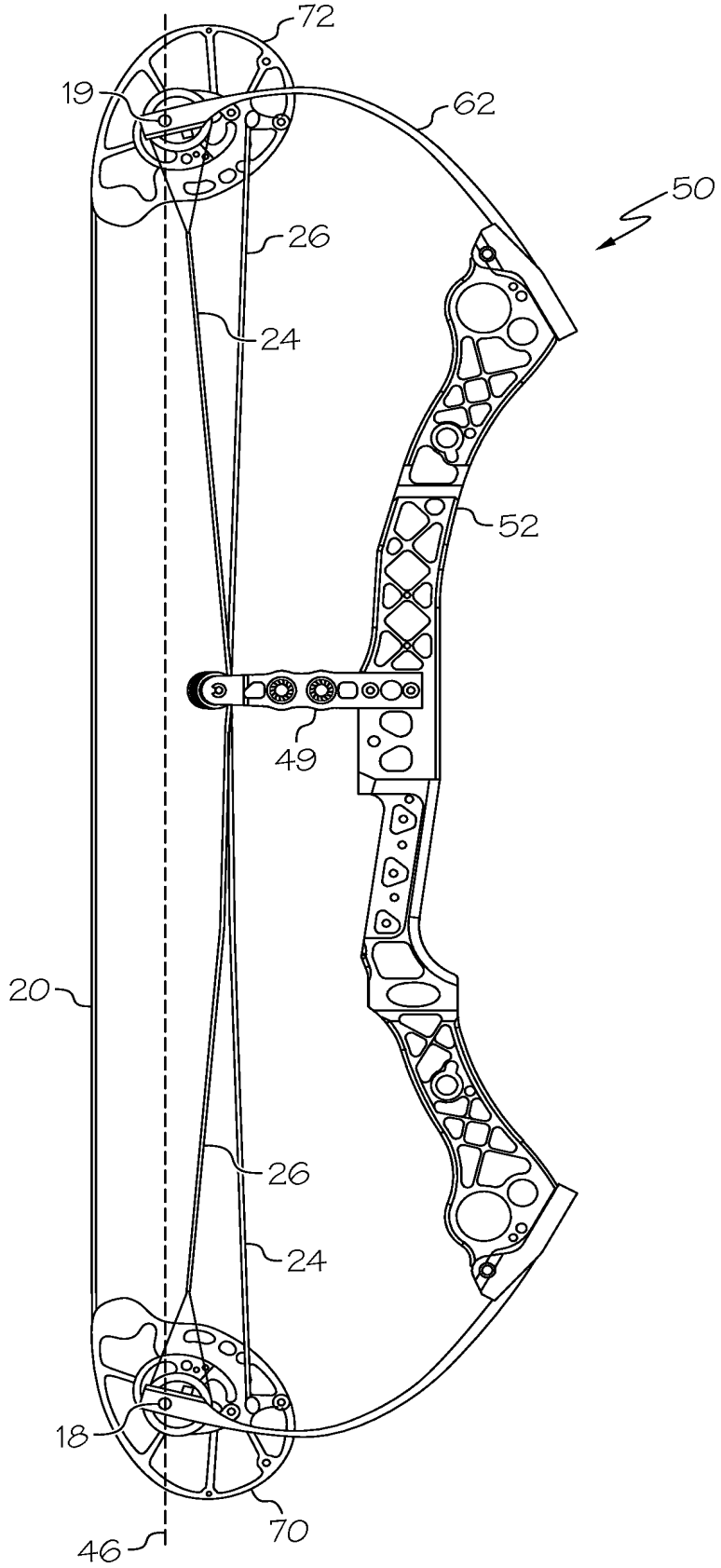

FIG. 7

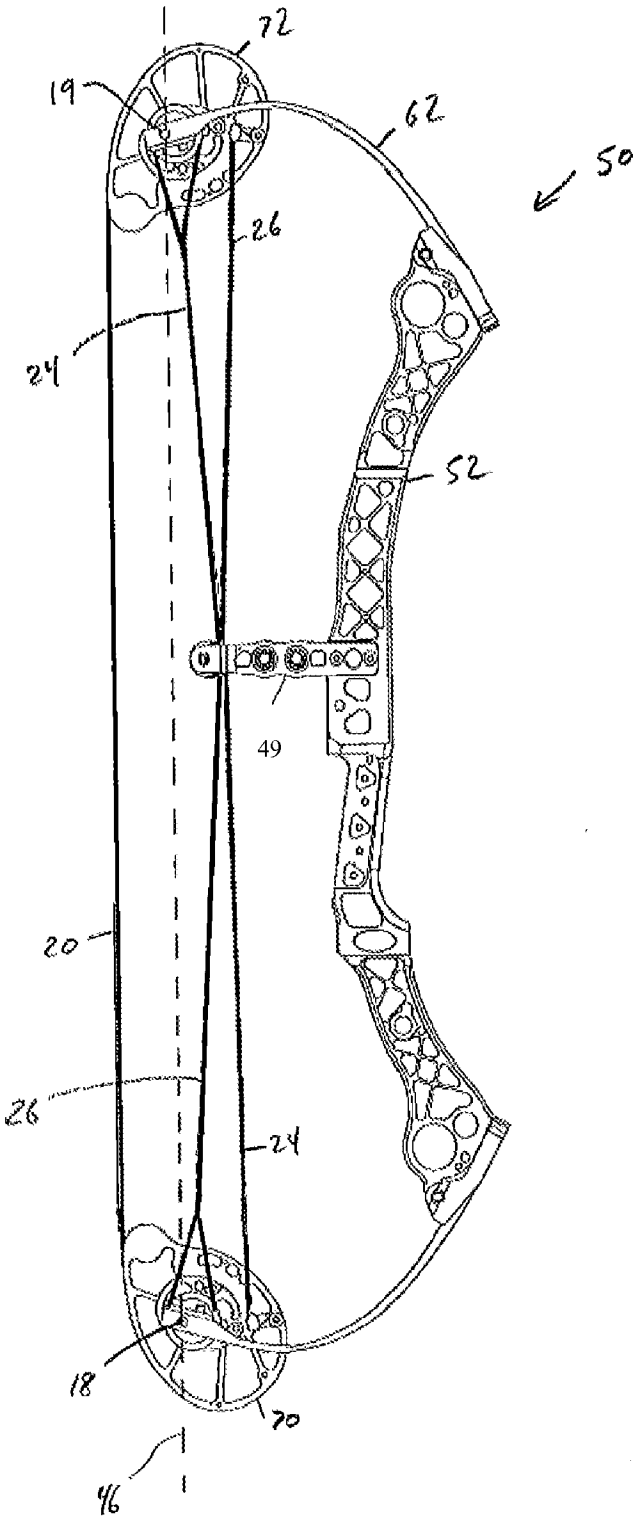

FIG 7

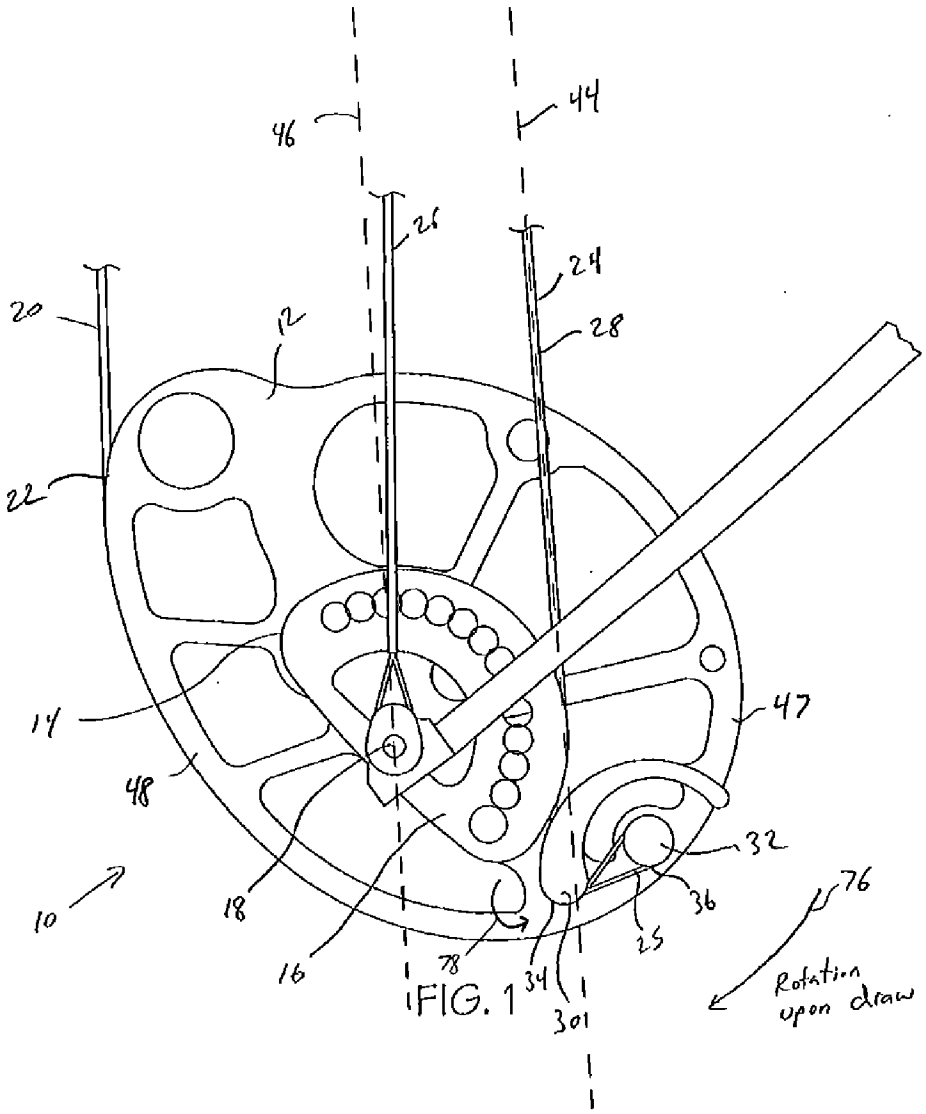
46
44
26
24
20
12
28
22
14
47
48
32
10
18
36
76
16
78
34
25
301
Rotation upon draw

FIG. 1

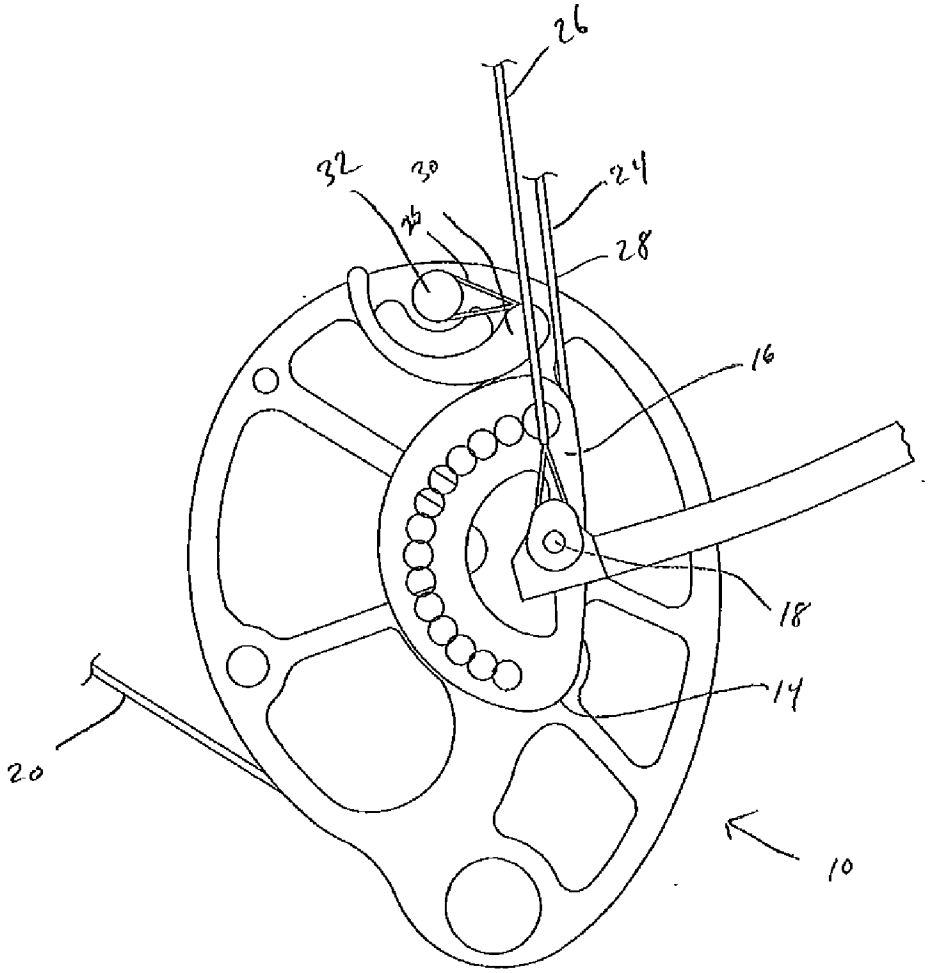

FIG. 2

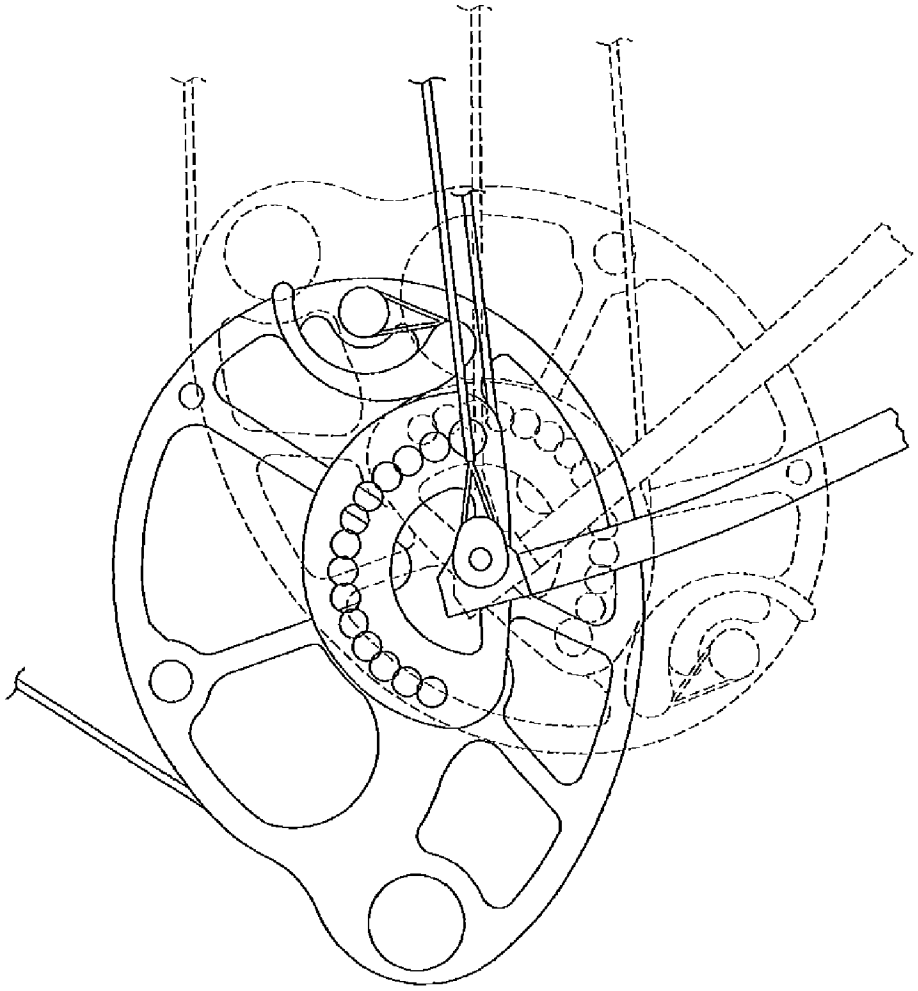

FIG. 3

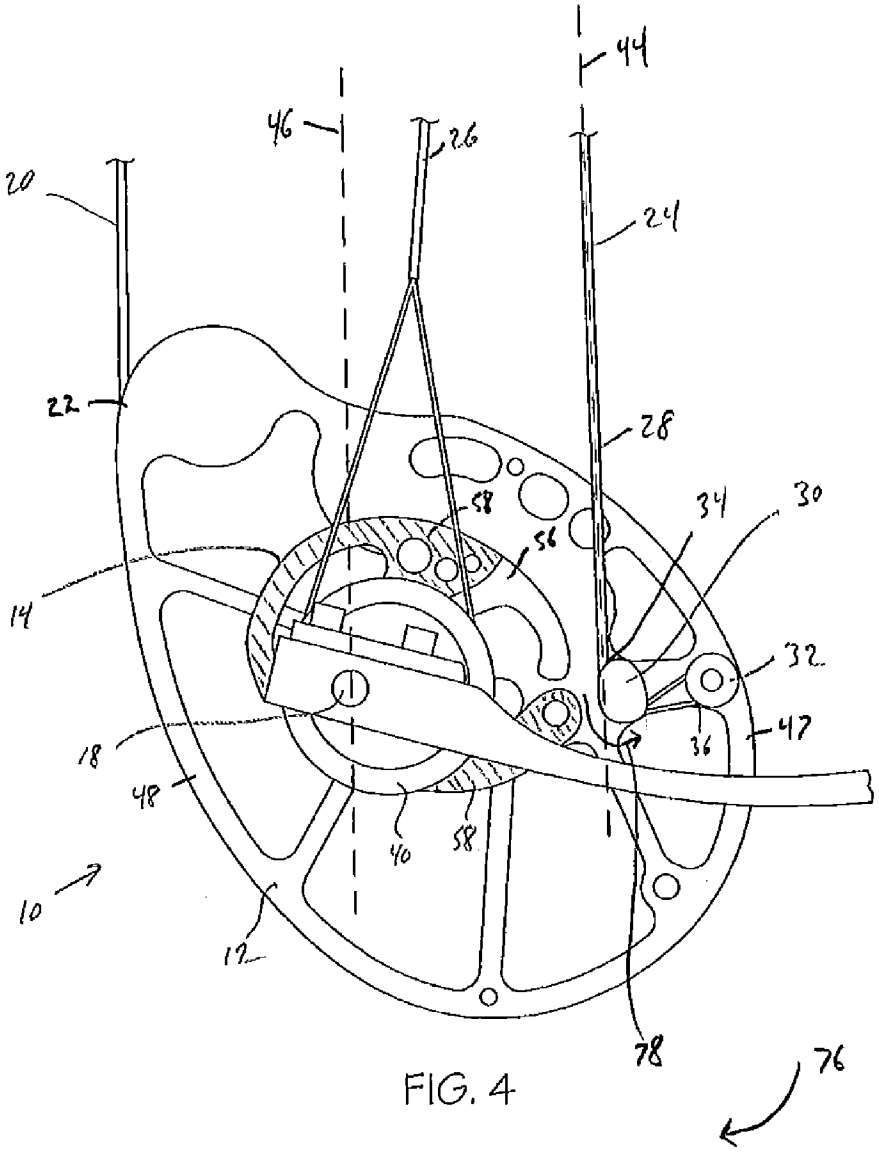

FIG. 4

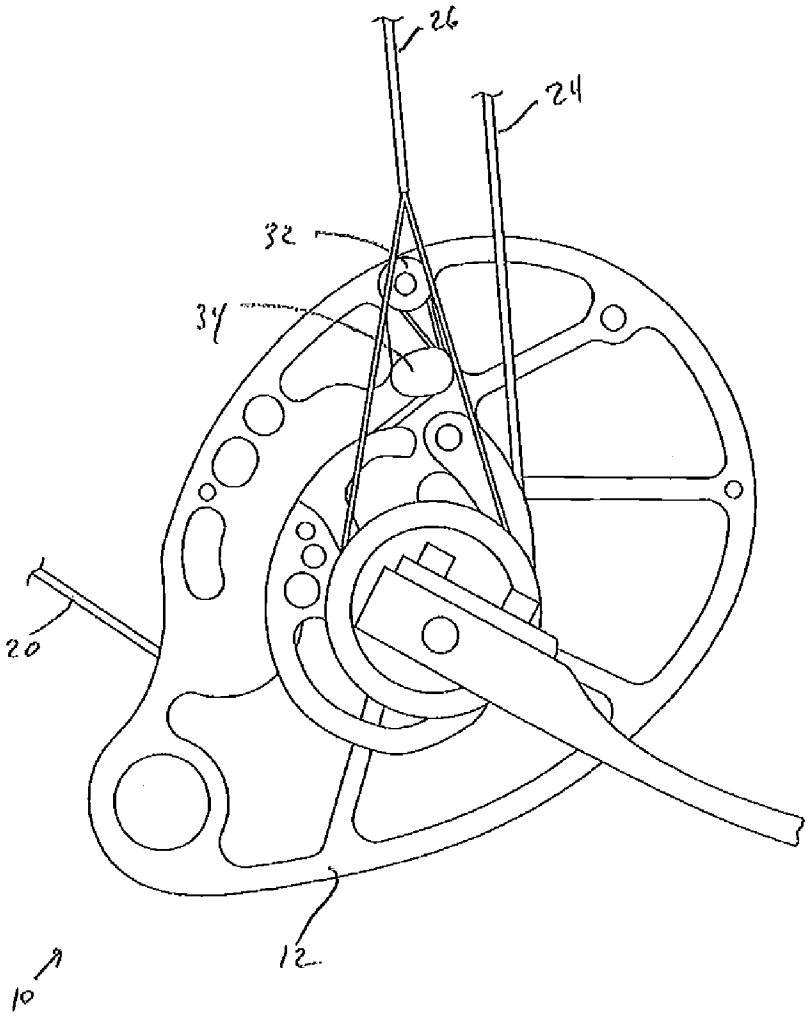

FIG. 5

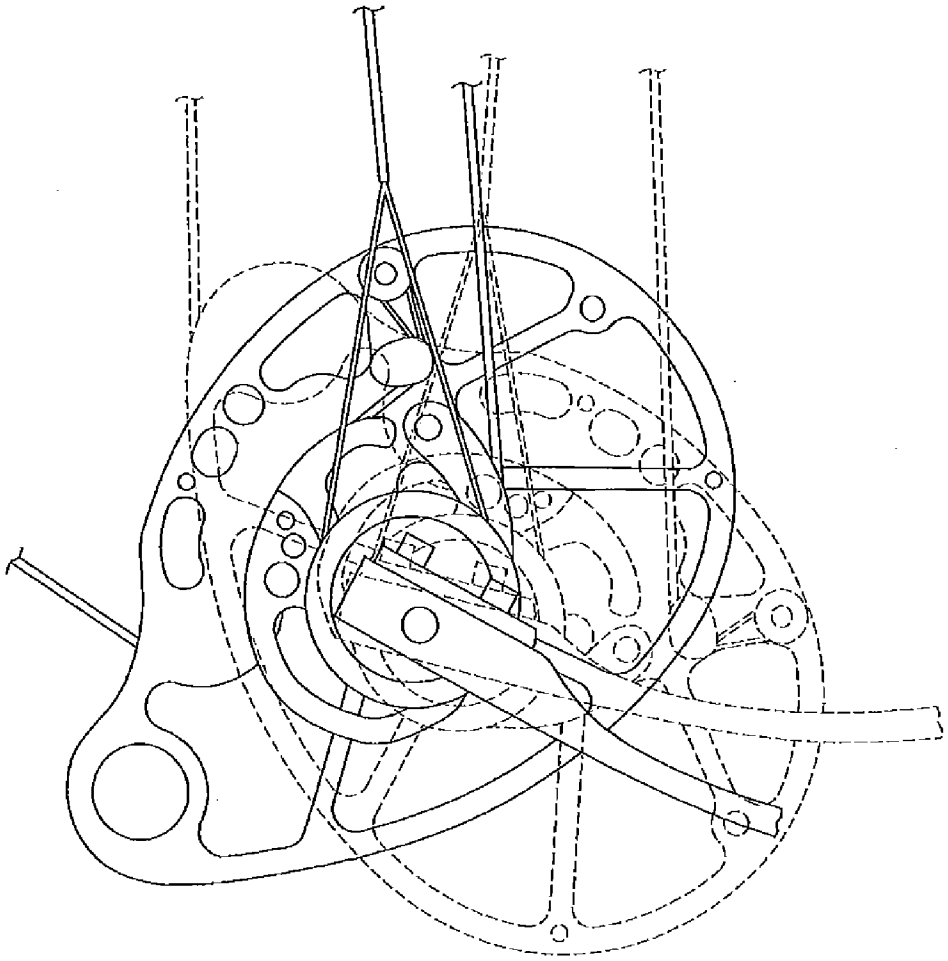

FIG. 6

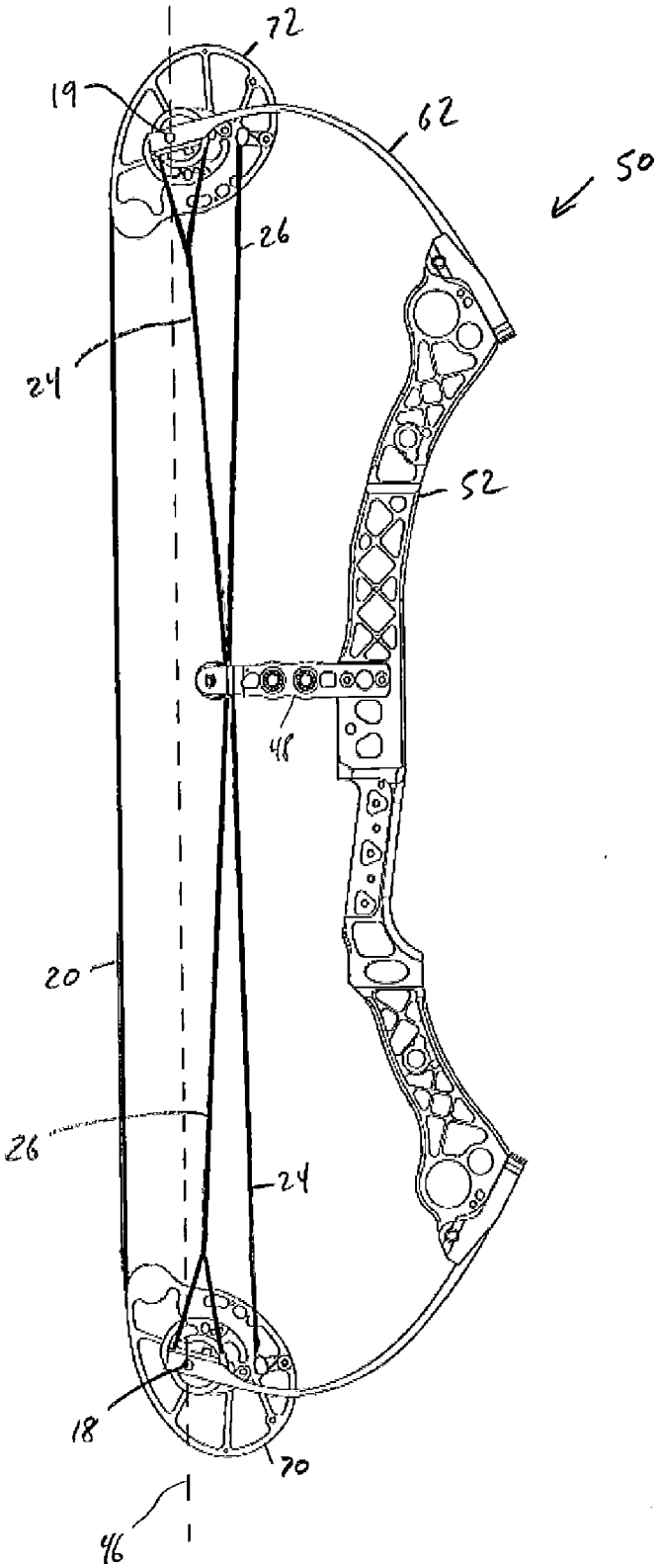

FIG 7

UNITED STATES PATENT AND TRADEMARK OFFICE

UNITED STATES DEPARTMENT OF COMMERCE
United States Patent and Trademark Office
Address: COMMISSIONER FOR PATENTS
P.O. Box 1450
Alexandria, Virginia 22313-1450
www.uspto.gov

APPLICATION NUMBER	FILING OR 371(C) DATE	FIRST NAMED APPLICANT	ATTY. DOCKET NO./TITLE
12/895,610	09/30/2010	Mathew A. McPherson	M55.2P-14675-US02

CONFIRMATION NO. 8071

POA ACCEPTANCE LETTER

490
VIDAS, ARRETT & STEINKRAUS, P.A.
SUITE 400, 6640 SHADY OAK ROAD
EDEN PRAIRIE, MN 55344

OC000000045124671

Date Mailed: 12/27/2010

NOTICE OF ACCEPTANCE OF POWER OF ATTORNEY

This is in response to the Power of Attorney filed 12/15/2010.

The Power of Attorney in this application is accepted. Correspondence in this application will be mailed to the above address as provided by 37 CFR 1.33.

/tchaka/

Office of Data Management, Application Assistance Unit (571) 272-4000, or (571) 272-4200, or 1-888-786-0101

Amendments To The Claims:

1. (Cancelled)

2. (Currently Amended) An archery bow having a brace condition and a drawn condition, the archery bow comprising:

a riser;

a first limb and a second limb supported by the riser;

a first rotatable member supported by the first limb on a first axle, a second rotatable member supported by the second limb on a second axle, the first rotatable member comprising a drawstring track, a cam track, a capstan and a terminal, wherein said drawstring track is oriented in a first cam plane and said cam track is oriented in a second cam plane offset from said first cam plane;

a drawstring extending between the first rotatable member and the second rotatable member;

a power cable attached to said terminal and extending toward the second limb, said power cable comprising an elongate straight portion located near said first rotatable member, a capstan portion in contact with said capstan and a terminal portion in contact with said terminal;

wherein, in the brace condition, the power cable wraps around the capstan in a first rotational direction as the power cable is traversed from the elongate straight portion to the terminal portion; and when the bow is drawn from the brace condition, the first rotatable member rotates in a second rotational direction that is opposite the first rotational direction ~~The archery bow of claim 1,~~ and wherein, in the brace condition, the elongate straight portion defines a plane, wherein said first axle and said terminal are located on opposite sides of said plane.

3. (Currently Amended) An archery bow having a brace condition and a drawn condition, the archery bow comprising:

a riser;

a first limb and a second limb supported by the riser;

a first rotatable member supported by the first limb on a first axle, a second rotatable member supported by the second limb on a second axle, the first rotatable member comprising a drawstring track, a cam track, a capstan and a terminal, wherein said drawstring track is oriented in a first cam plane and said cam track is oriented in a second cam plane offset from said first cam plane;

a drawstring extending between the first rotatable member and the second rotatable member;

a power cable attached to said terminal and extending toward the second limb, said power cable comprising an elongate straight portion located near said first rotatable member, a capstan portion in contact with said capstan and a terminal portion in contact with said terminal;

wherein, in the brace condition, the power cable wraps around the capstan in a first rotational direction as the power cable is traversed from the elongate straight portion to the terminal portion; and when the bow is drawn from the brace condition, the first rotatable member rotates in a second rotational direction that is opposite the first rotational direction and ~~The archery bow of claim 1,~~ wherein, in the drawn condition, the capstan is located closer to the elongate straight portion than the terminal.

4. (Currently Amended) The archery bow of claim ~~1~~ 2, wherein, in the brace condition, the power cable is not oriented in said cam track.

5. (Currently Amended) The archery bow of claim ~~1~~ 2, wherein a distance between the first axle and the terminal is greater than a distance between the first axle and the cam track.

6. (Currently Amended) The archery bow of claim ~~1~~ 2, wherein at least a portion of said cam track comprises a module that is attached to said first rotatable member.

7. (Original) The archery bow of claim 6, wherein said module is adjustable between a plurality of orientations with respect to said first rotatable member.

8. (Original) The archery bow of claim 7, wherein said plurality of orientations comprises a plurality of rotational orientations about said first axle.

9. (Original) The archery bow of claim 6, wherein said module is interchangeable with a second module having a different shape.

10. (Currently Amended) The archery bow of claim ~~1~~ 2, further comprising a second power cable, said second rotatable member comprising a second cam track, a second capstan and a second terminal, the second power cable attached to said second terminal and extending toward the first limb, said second power cable comprising a second elongate straight portion located near said second rotatable member, a second capstan portion in contact with said second capstan and a second terminal portion in contact with said second terminal;

wherein, in the brace condition, the second power cable wraps around the second capstan in the second rotational direction as the second power cable is traversed from the second elongate straight portion to the second terminal portion; and when the bow is drawn from the brace condition, the second rotatable member rotates in the first rotational direction.

11. (Original) The archery bow of claim 10, wherein said second rotatable member comprises a mirror image of said first rotatable member.

12. (Cancelled)

13. (Currently Amended) The archery bow of claim ~~12~~ 14, wherein said distance between the terminal and the axle plane is measured orthogonal to said axle plane, and said distance between the capstan and the axle plane is measured orthogonal to said axle plane.

14. (Currently Amended) An archery bow having a brace condition and a drawn condition, the bow comprising:

a riser;

a first limb and a second limb supported by the riser;

a first rotatable member supported by the first limb on a first axle, a second rotatable member supported by the second limb on a second axle, the first axle and the second axle defining an axle plane, the first rotatable member comprising a drawstring track, a cam track, a capstan and a terminal, wherein said drawstring track is oriented in a first cam plane and said cam track is oriented in a second cam plane offset from said first cam plane;

a drawstring extending between the first rotatable member and the second rotatable member, the drawstring extending from the first rotatable member at an exit location;

a power cable attached to said terminal and extending toward the second limb, said power cable comprising a capstan portion in contact with said capstan and a terminal portion in contact with said terminal;

wherein, in the brace condition, the axle plane divides the first rotatable member to a first part and a second part, the capstan and the terminal located in the first part, the drawstring exit location located in the second part, and a distance between the terminal and the axle plane is greater than a distance between the capstan and the axle plane and ~~The archery bow of claim 12,~~ wherein, in the brace condition, said power cable comprises an elongate straight portion located near said first rotatable member, the elongate straight portion defines a cable portion plane, said

first axle and said terminal are located on opposite sides of said cable portion plane.

15. (Currently Amended) An archery bow having a brace condition and a drawn condition, the bow comprising:

a riser;

a first limb and a second limb supported by the riser;

a first rotatable member supported by the first limb on a first axle, a second rotatable member supported by the second limb on a second axle, the first axle and the second axle defining an axle plane, the first rotatable member comprising a drawstring track, a cam track, a capstan and a terminal, wherein said drawstring track is oriented in a first cam plane and said cam track is oriented in a second cam plane offset from said first cam plane;

a drawstring extending between the first rotatable member and the second rotatable member, the drawstring extending from the first rotatable member at an exit location;

a power cable attached to said terminal and extending toward the second limb, said power cable comprising a capstan portion in contact with said capstan and a terminal portion in contact with said terminal;

wherein, in the brace condition, the axle plane divides the first rotatable member to a first part and a second part, the capstan and the terminal located in the first part, the drawstring exit location located in the second part, and a distance between the terminal and the axle plane is greater than a distance between the capstan and the axle plane and ~~The archery bow of claim 12,~~ wherein, in the drawn condition, said power cable comprises an elongate straight portion located near said first rotatable member, the capstan located closer to the elongate straight portion than the terminal.

16. (Currently Amended) The archery bow of claim ~~12~~ 14, wherein a distance between the first axle and the terminal is greater than a distance between the first axle and the cam track.

17. (Currently Amended) The archery bow of claim ~~12~~ 14, wherein, in the brace condition, the power cable is not oriented in said cam track.

18. (Currently Amended) The archery bow of claim ~~12~~ 14, wherein at least a portion of said cam track comprises a module that is attached to said first rotatable member, the module being removable or repositionable.

19. (Currently Amended) The archery bow of claim ~~12~~ 14, further comprising a second power cable, said second rotatable member comprising a second cam track, a second capstan and a second terminal, the second power cable attached to said second terminal and extending toward the first limb, said second power cable comprising a second capstan portion in contact with said second capstan and a second terminal portion in contact with said second terminal, the drawstring extending from the second rotatable member at a second exit location;

wherein, in the brace condition, the axle plane divides the second rotatable member to a first part and a second part, the second capstan and the second terminal located in the first part, the second drawstring exit location located in the second part, and a distance between the second terminal and the axle plane is greater than a distance between the second capstan and the axle plane.

20. (Original) The archery bow of claim 19, wherein said second rotatable member comprises a mirror image of said first rotatable member.

21. (Currently Amended) The archery bow of claim ~~1~~ 2, wherein said first rotatable member comprises an outer peripheral structure, said terminal located on said outer peripheral structure.

Amendments To The Claims:

1. (Previously Presented) An archery bow having a brace condition and a drawn condition, the archery bow comprising:

a riser;

a first limb and a second limb supported by the riser;

a first rotatable member supported by the first limb on a first axle, a second rotatable member supported by the second limb on a second axle, the first rotatable member comprising a drawstring track, a cam track, a capstan and a terminal, wherein said drawstring track is oriented in a first cam plane and said cam track is oriented in a second cam plane offset from said first cam plane;

a drawstring extending between the first rotatable member and the second rotatable member;

a power cable attached to said terminal and extending toward the second limb, said power cable comprising an elongate straight portion located near said first rotatable member, a capstan portion in contact with said capstan and a terminal portion in contact with said terminal;

wherein, in the brace condition, the power cable wraps around the capstan in a first rotational direction as the power cable is traversed from the elongate straight portion to the terminal portion; and when the bow is drawn from the brace condition, the first rotatable member rotates in a second rotational direction that is opposite the first rotational direction.

2. (Original) The archery bow of claim 1, wherein, in the brace condition, the elongate straight portion defines a plane, wherein said first axle and said terminal are located on opposite sides of said plane.

3. (Original) The archery bow of claim 1, wherein, in the drawn condition, the capstan is located closer to the elongate straight portion than the terminal.

4. (Original) The archery bow of claim 1, wherein, in the brace condition, the power cable is not oriented in said cam track.

5. (Original) The archery bow of claim 1, wherein a distance between the first axle and the terminal is greater than a distance between the first axle and the cam track.

6. (Original) The archery bow of claim 1, wherein at least a portion of said cam track comprises a module that is attached to said first rotatable member.

7. (Original) The archery bow of claim 6, wherein said module is adjustable between a plurality of orientations with respect to said first rotatable member.

8. (Original) The archery bow of claim 7, wherein said plurality of orientations comprises a plurality of rotational orientations about said first axle.

9. (Original) The archery bow of claim 6, wherein said module is interchangeable with a second module having a different shape.

10. (Original) The archery bow of claim 1, further comprising a second power cable, said second rotatable member comprising a second cam track, a second capstan and a second terminal, the second power cable attached to said second terminal and extending toward the first limb, said second power cable comprising a second elongate straight portion located near said second rotatable member, a second capstan portion in contact with said second capstan and a second terminal portion in contact with said second terminal;

wherein, in the brace condition, the second power cable wraps around the second capstan in the second rotational direction as the second power cable is traversed from the second elongate straight portion to the second terminal portion; and when the bow is drawn from the brace condition, the second rotatable member rotates in the first rotational direction.

11. (Original) The archery bow of claim 10, wherein said second rotatable member comprises a mirror image of said first rotatable member.

12. (Previously Presented) An archery bow having a brace condition and a drawn condition, the bow comprising:

a riser;

a first limb and a second limb supported by the riser;

a first rotatable member supported by the first limb on a first axle, a second rotatable member supported by the second limb on a second axle, the first axle and the second axle defining an axle plane, the first rotatable member comprising a drawstring track, a cam track, a capstan and a terminal, wherein said drawstring track is oriented in a first cam plane and said cam track is oriented in a second cam plane offset from said first cam plane;

a drawstring extending between the first rotatable member and the second rotatable member, the drawstring extending from the first rotatable member at an exit location;

a power cable attached to said terminal and extending toward the second limb, said power cable comprising a capstan portion in contact with said capstan and a terminal portion in contact with said terminal;

wherein, in the brace condition, the axle plane divides the first rotatable member to a first part and a second part, the capstan and the terminal located in the first part, the drawstring exit location located in the second part, and a distance between the terminal and the axle plane is greater than a distance between the capstan and the axle plane.

13. (Original) The archery bow of claim 12, wherein said distance between the terminal and the axle plane is measured orthogonal to said axle plane, and said distance between the capstan and the axle plane is measured orthogonal to said axle plane.

14. (Original) The archery bow of claim 12, wherein, in the brace condition, said power cable comprises an elongate straight portion located near said first rotatable member, the elongate straight portion defines a cable portion plane, said first axle and said terminal are located on opposite sides of said cable portion plane.

15. (Original) The archery bow of claim 12, wherein, in the drawn condition, said power cable comprises an elongate straight portion located near said first rotatable member, the capstan located closer to the elongate straight portion than the terminal.

16. (Original) The archery bow of claim 12, wherein a distance between the first axle and the terminal is greater than a distance between the first axle and the cam track.

17. (Original) The archery bow of claim 12, wherein, in the brace condition, the power cable is not oriented in said cam track.

18. (Original) The archery bow of claim 12, wherein at least a portion of said cam track comprises a module that is attached to said first rotatable member, the module being removable or repositionable.

19. (Original) The archery bow of claim 12, further comprising a second power cable, said second rotatable member comprising a second cam track, a second capstan and a second terminal, the second power cable attached to said second terminal and extending toward the first limb, said second power cable comprising a second capstan portion in contact with said second capstan and a second terminal portion in contact with said second terminal, the drawstring extending from the second rotatable member at a second exit location;

wherein, in the brace condition, the axle plane divides the second rotatable member to a first part and a second part, the second capstan and the second terminal located in the first part, the second drawstring exit location located in the second part, and a distance between the second terminal and the axle plane is greater than a distance between the second capstan and the axle plane.

20. (Original) The archery bow of claim 19, wherein said second rotatable member comprises a mirror image of said first rotatable member.

21. (New) The archery bow of claim 1, wherein said first rotatable member comprises an outer peripheral structure, said terminal located on said outer peripheral structure.

Amendments To The Claims:

1. (Currently amended) An archery bow having a brace condition and a drawn condition, the archery bow comprising:

a riser;

a first limb and a second limb supported by the riser;

a first rotatable member supported by the first limb on a first axle, a second rotatable member supported by the second limb on a second axle, the first rotatable member comprising a drawstring track, a cam track, a capstan and a terminal, wherein said drawstring track is oriented in a first cam plane and said cam track is oriented in a second cam plane offset from said first cam plane;

a drawstring extending between the first rotatable member and the second rotatable member;

a power cable attached to said terminal and extending toward the second limb, said power cable comprising an elongate straight portion located near said first rotatable member, a capstan portion in contact with said capstan and a terminal portion in contact with said terminal;

wherein, in the brace condition, the power cable wraps around the capstan in a first rotational direction as the power cable is traversed from the elongate straight portion to the terminal portion; and when the bow is drawn from the brace condition, the first rotatable member rotates in a second rotational direction that is opposite the first rotational direction.

2. (Original) The archery bow of claim 1, wherein, in the brace condition, the elongate straight portion defines a plane, wherein said first axle and said terminal are located on opposite sides of said plane.

3. (Original) The archery bow of claim 1, wherein, in the drawn condition, the capstan is located closer to the elongate straight portion than the terminal.

4. (Original) The archery bow of claim 1, wherein, in the brace condition, the power cable is not oriented in said cam track.

5. (Original) The archery bow of claim 1, wherein a distance between the first axle and the terminal is greater than a distance between the first axle and the cam track.

6. (Original) The archery bow of claim 1, wherein at least a portion of said cam track comprises a module that is attached to said first rotatable member.

7. (Original) The archery bow of claim 6, wherein said module is adjustable between a plurality of orientations with respect to said first rotatable member.

8. (Original) The archery bow of claim 7, wherein said plurality of orientations comprises a plurality of rotational orientations about said first axle.

9. (Original) The archery bow of claim 6, wherein said module is interchangeable with a second module having a different shape.

10. (Original) The archery bow of claim 1, further comprising a second power cable, said second rotatable member comprising a second cam track, a second capstan and a second terminal, the second power cable attached to said second terminal and extending toward the first limb, said second power cable comprising a second elongate straight portion located near said second rotatable member, a second capstan portion in contact with said second capstan and a second terminal portion in contact with said second terminal;

wherein, in the brace condition, the second power cable wraps around the second capstan in the second rotational direction as the second power cable is traversed from the second elongate straight portion to the second terminal portion; and when the bow is drawn from the brace condition, the second rotatable member rotates in the first rotational direction.

11. (Original) The archery bow of claim 10, wherein said second rotatable member comprises a mirror image of said first rotatable member.

12. (Currently amended) An archery bow having a brace condition and a drawn condition, the bow comprising:

a riser;

a first limb and a second limb supported by the riser;

a first rotatable member supported by the first limb on a first axle, a second rotatable member supported by the second limb on a second axle, the first axle and the second axle defining an axle plane, the first rotatable member comprising <u>a drawstring track,</u> a cam track, a capstan and a terminal<u>, wherein said drawstring track is oriented in a first cam plane and said cam track is oriented in a second cam plane offset from said first cam plane</u>;

a drawstring extending between the first rotatable member and the second rotatable member, the drawstring extending from the first rotatable member at an exit location;

a power cable attached to said terminal and extending toward the second limb, said power cable comprising a capstan portion in contact with said capstan and a terminal portion in contact with said terminal;

wherein, in the brace condition, the axle plane divides the first rotatable member to a first part and a second part, the capstan and the terminal located in the first part, the drawstring exit location located in the second part, and a distance between the terminal and the axle plane is greater than a distance between the capstan and the axle plane.

13. (Original) The archery bow of claim 12, wherein said distance between the terminal and the axle plane is measured orthogonal to said axle plane, and said distance between the capstan and the axle plane is measured orthogonal to said axle plane.

14. (Original) The archery bow of claim 12, wherein, in the brace condition, said power cable comprises an elongate straight portion located near said first rotatable member, the elongate straight portion defines a cable portion plane, said first axle and said terminal are located on opposite sides of said cable portion plane.

15. (Original) The archery bow of claim 12, wherein, in the drawn condition, said power cable comprises an elongate straight portion located near said first rotatable member, the capstan located closer to the elongate straight portion than the terminal.

16. (Original) The archery bow of claim 12, wherein a distance between the first axle and the terminal is greater than a distance between the first axle and the cam track.

17. (Original) The archery bow of claim 12, wherein, in the brace condition, the power cable is not oriented in said cam track.

18. (Original) The archery bow of claim 12, wherein at least a portion of said cam track comprises a module that is attached to said first rotatable member, the module being removable or repositionable.

19. (Original) The archery bow of claim 12, further comprising a second power cable, said second rotatable member comprising a second cam track, a second capstan and a second terminal, the second power cable attached to said second terminal and extending toward the first limb, said second power cable comprising a second capstan portion in contact with said second capstan and a second terminal portion in contact with said second terminal, the drawstring extending from the second rotatable member at a second exit location;

wherein, in the brace condition, the axle plane divides the second rotatable member to a first part and a second part, the second capstan and the second terminal located in the first part, the second drawstring exit location located in the second part, and a distance between the second terminal and the axle plane is greater than a distance between the second capstan and the axle plane.

20. (Original) The archery bow of claim 19, wherein said second rotatable member comprises a mirror image of said first rotatable member.

Claim Listing:

1. (Original) An archery bow having a brace condition and a drawn condition, the archery bow comprising:

a riser;

a first limb and a second limb supported by the riser;

a first rotatable member supported by the first limb on a first axle, a second rotatable member supported by the second limb on a second axle, the first rotatable member comprising a cam track, a capstan and a terminal;

a drawstring extending between the first rotatable member and the second rotatable member;

a power cable attached to said terminal and extending toward the second limb, said power cable comprising an elongate straight portion located near said first rotatable member, a capstan portion in contact with said capstan and a terminal portion in contact with said terminal;

wherein, in the brace condition, the power cable wraps around the capstan in a first rotational direction as the power cable is traversed from the elongate straight portion to the terminal portion; and when the bow is drawn from the brace condition, the first rotatable member rotates in a second rotational direction that is opposite the first rotational direction.

2. (Original) The archery bow of claim 1, wherein, in the brace condition, the elongate straight portion defines a plane, wherein said first axle and said terminal are located on opposite sides of said plane.

3. (Original) The archery bow of claim 1, wherein, in the drawn condition, the capstan is located closer to the elongate straight portion than the terminal.

4. (Original) The archery bow of claim 1, wherein, in the brace condition, the power cable is not oriented in said cam track.

5. (Original) The archery bow of claim 1, wherein a distance between the first axle and the terminal is greater than a distance between the first axle and the cam track.

6. (Original) The archery bow of claim 1, wherein at least a portion of said cam track comprises a module that is attached to said first rotatable member.

7. (Original) The archery bow of claim 6, wherein said module is adjustable between a plurality of orientations with respect to said first rotatable member.

8. (Original) The archery bow of claim 7, wherein said plurality of orientations comprises a plurality of rotational orientations about said first axle.

9. (Original) The archery bow of claim 6, wherein said module is interchangeable with a second module having a different shape.

10. (Original) The archery bow of claim 1, further comprising a second power cable, said second rotatable member comprising a second cam track, a second capstan and a second terminal, the second power cable attached to said second terminal and extending toward the first limb, said second power cable comprising a second elongate straight portion located near said second rotatable member, a second capstan portion in contact with said second capstan and a second terminal portion in contact with said second terminal;

wherein, in the brace condition, the second power cable wraps around the second capstan in the second rotational direction as the second power cable is traversed from the second elongate straight portion to the second terminal portion; and when the bow is drawn from the brace condition, the second rotatable member rotates in the first rotational direction.

11. (Original) The archery bow of claim 10, wherein said second rotatable member comprises a mirror image of said first rotatable member.

12. (Original) An archery bow having a brace condition and a drawn condition, the bow comprising:

a riser;

a first limb and a second limb supported by the riser;

a first rotatable member supported by the first limb on a first axle, a second rotatable member supported by the second limb on a second axle, the first axle and the second axle defining an axle plane, the first rotatable member comprising a cam track, a capstan and a terminal;

a drawstring extending between the first rotatable member and the second rotatable member, the drawstring extending from the first rotatable member at an exit location;

a power cable attached to said terminal and extending toward the second limb, said power cable comprising a capstan portion in contact with said capstan and a terminal portion in contact with said terminal;

wherein, in the brace condition, the axle plane divides the first rotatable member to a first

part and a second part, the capstan and the terminal located in the first part, the drawstring exit location located in the second part, and a distance between the terminal and the axle plane is greater than a distance between the capstan and the axle plane.

13. (Original) The archery bow of claim 12, wherein said distance between the terminal and the axle plane is measured orthogonal to said axle plane, and said distance between the capstan and the axle plane is measured orthogonal to said axle plane.

14. (Original) The archery bow of claim 12, wherein, in the brace condition, said power cable comprises an elongate straight portion located near said first rotatable member, the elongate straight portion defines a cable portion plane, said first axle and said terminal are located on opposite sides of said cable portion plane.

15. (Original) The archery bow of claim 12, wherein, in the drawn condition, said power cable comprises an elongate straight portion located near said first rotatable member, the capstan located closer to the elongate straight portion than the terminal.

16. (Original) The archery bow of claim 12, wherein a distance between the first axle and the terminal is greater than a distance between the first axle and the cam track.

17. (Original) The archery bow of claim 12, wherein, in the brace condition, the power cable is not oriented in said cam track.

18. (Original) The archery bow of claim 12, wherein at least a portion of said cam track comprises a module that is attached to said first rotatable member, the module being removable or repositionable.

19. (Original) The archery bow of claim 12, further comprising a second power cable, said second rotatable member comprising a second cam track, a second capstan and a second terminal, the second power cable attached to said second terminal and extending toward the first limb, said second power cable comprising a second capstan portion in contact with said second capstan and a second terminal portion in contact with said second terminal, the drawstring extending from the second rotatable member at a second exit location;

wherein, in the brace condition, the axle plane divides the second rotatable member to a first part and a second part, the second capstan and the second terminal located in the first part, the second drawstring exit location located in the second part, and a distance between the second terminal and the axle plane is greater than a distance between the second capstan and the axle

plane.

20. (Original) The archery bow of claim 19, wherein said second rotatable member comprises a mirror image of said first rotatable member.

Claims:

1. An archery bow having a brace condition and a drawn condition, the archery bow comprising:

a riser;

a first limb and a second limb supported by the riser;

a first rotatable member supported by the first limb on a first axle, a second rotatable member supported by the second limb on a second axle, the first rotatable member comprising a cam track, a capstan and a terminal;

a drawstring extending between the first rotatable member and the second rotatable member;

a power cable attached to said terminal and extending toward the second limb, said power cable comprising an elongate straight portion located near said first rotatable member, a capstan portion in contact with said capstan and a terminal portion in contact with said terminal;

wherein, in the brace condition, the power cable wraps around the capstan in a first rotational direction as the power cable is traversed from the elongate straight portion to the terminal portion; and when the bow is drawn from the brace condition, the first rotatable member rotates in a second rotational direction that is opposite the first rotational direction.

2. The archery bow of claim 1, wherein, in the brace condition, the elongate straight portion defines a plane, wherein said first axle and said terminal are located on opposite sides of said plane.

3. The archery bow of claim 1, wherein, in the drawn condition, the capstan is located closer to the elongate straight portion than the terminal.

4. The archery bow of claim 1, wherein, in the brace condition, the power cable is not oriented in said cam track.

5. The archery bow of claim 1, wherein a distance between the first axle and the terminal is greater than a distance between the first axle and the cam track.

6. The archery bow of claim 1, wherein at least a portion of said cam track comprises a module that is attached to said first rotatable member.

7. The archery bow of claim 6, wherein said module is adjustable between a plurality of orientations with respect to said first rotatable member.

8. The archery bow of claim 7, wherein said plurality of orientations comprises a plurality of rotational orientations about said first axle.

9. The archery bow of claim 6, wherein said module is interchangeable with a second module having a different shape.

10. The archery bow of claim 1, further comprising a second power cable, said second rotatable member comprising a second cam track, a second capstan and a second terminal, the second power cable attached to said second terminal and extending toward the first limb, said second power cable comprising a second elongate straight portion located near said second rotatable member, a second capstan portion in contact with said second capstan and a second terminal portion in contact with said second terminal;

wherein, in the brace condition, the second power cable wraps around the second capstan in the second rotational direction as the second power cable is traversed from the second elongate straight portion to the second terminal portion; and when the bow is drawn from the brace condition, the second rotatable member rotates in the first rotational direction.

11. The archery bow of claim 10, wherein said second rotatable member comprises a mirror image of said first rotatable member.

12. An archery bow having a brace condition and a drawn condition, the bow comprising:

a riser;

a first limb and a second limb supported by the riser;

a first rotatable member supported by the first limb on a first axle, a second rotatable member supported by the second limb on a second axle, the first axle and the second axle defining an axle plane, the first rotatable member comprising a cam track, a capstan and a terminal;

a drawstring extending between the first rotatable member and the second rotatable member, the drawstring extending from the first rotatable member at an exit location;

a power cable attached to said terminal and extending toward the second limb, said power cable comprising a capstan portion in contact with said capstan and a terminal portion in contact with said terminal;

wherein, in the brace condition, the axle plane divides the first rotatable member

to a first part and a second part, the capstan and the terminal located in the first part, the drawstring exit location located in the second part, and a distance between the terminal and the axle plane is greater than a distance between the capstan and the axle plane.

13. The archery bow of claim 12, wherein said distance between the terminal and the axle plane is measured orthogonal to said axle plane, and said distance between the capstan and the axle plane is measured orthogonal to said axle plane.

14. The archery bow of claim 12, wherein, in the brace condition, said power cable comprises an elongate straight portion located near said first rotatable member, the elongate straight portion defines a cable portion plane, said first axle and said terminal are located on opposite sides of said cable portion plane.

15. The archery bow of claim 12, wherein, in the drawn condition, said power cable comprises an elongate straight portion located near said first rotatable member, the capstan located closer to the elongate straight portion than the terminal.

16. The archery bow of claim 12, wherein a distance between the first axle and the terminal is greater than a distance between the first axle and the cam track.

17. The archery bow of claim 12, wherein, in the brace condition, the power cable is not oriented in said cam track.

18. The archery bow of claim 12, wherein at least a portion of said cam track comprises a module that is attached to said first rotatable member, the module being removable or repositionable.

19. The archery bow of claim 12, further comprising a second power cable, said second rotatable member comprising a second cam track, a second capstan and a second terminal, the second power cable attached to said second terminal and extending toward the first limb, said second power cable comprising a second capstan portion in contact with said second capstan and a second terminal portion in contact with said second terminal, the drawstring extending from the second rotatable member at a second exit location;

wherein, in the brace condition, the axle plane divides the second rotatable member to a first part and a second part, the second capstan and the second terminal located in the first part, the second drawstring exit location located in the second part, and a distance between the second terminal and the axle plane is greater than a distance between the second capstan and the axle plane.

20. The archery bow of claim 19, wherein said second rotatable member comprises a mirror image of said first rotatable member.

UNITED STATES PATENT AND TRADEMARK OFFICE

UNITED STATES DEPARTMENT OF COMMERCE
United States Patent and Trademark Office
Address: COMMISSIONER FOR PATENTS
P.O. Box 1450
Alexandria, Virginia 22313-1450
www.uspto.gov

BIB DATA SHEET

CONFIRMATION NO. 8071

SERIAL NUMBER	FILING or 371(c) DATE	CLASS	GROUP ART UNIT	ATTORNEY DOCKET NO.
12/895,610	09/30/2010 **RULE**	124	3711	M55.2P-14675-US02

APPLICANTS
Mathew A. McPherson, Norwalk, WI;

**** CONTINUING DATA ***************************
This appln claims benefit of 61/247,473 09/30/2009

**** FOREIGN APPLICATIONS ***************************

**** IF REQUIRED, FOREIGN FILING LICENSE GRANTED **** ** SMALL ENTITY **
10/15/2010

Foreign Priority claimed	☐ Yes ☑ No		STATE OR COUNTRY	SHEETS DRAWINGS	TOTAL CLAIMS	INDEPENDENT CLAIMS
35 USC 119(a-d) conditions met	☐ Yes ☑ No	☐ Met after Allowance	WI	7	20	2
Verified and Acknowledged	/JOHN ELLIOTT SIMMS JR/ Examiner's Signature	Initials				

ADDRESS

VIDAS, ARRETT & STEINKRAUS, P.A.
Richard A. Arrett
SUITE 400, 6640 SHADY OAK ROAD
6640 Shady Oak Rd.
EDEN PRAIRIE, MN 55344
UNITED STATES

TITLE

Archery Bow Cam

FILING FEE RECEIVED		
527	FEES: Authority has been given in Paper No._____ to charge/credit DEPOSIT ACCOUNT No._____ for following:	☐ All Fees ☐ 1.16 Fees (Filing) ☐ 1.17 Fees (Processing Ext. of time) ☐ 1.18 Fees (Issue) ☐ Other _____ ☐ Credit

PATENT

IN THE UNITED STATES PATENT AND TRADEMARK OFFICE

In re Application of:	**Mathew A. McPherson**
Application No.:	**Not Assigned**
Filed:	**Not Assigned**
For:	**Archery Bow Cam**
Group Art Unit:	**Not Assigned**

Mail Stop _____
Commissioner for Patents
P.O. Box 1450
Alexandria, VA 22313-1450

Docket No.: M55.2P-14675-US02

CONSTRUCTIVE PETITION FOR EXTENSION OF TIME AND FEE AUTHORIZATION PURSUANT TO 37 C.F.R. §1.136(a)(3)

Applicant hereby requests that the United States Patent and Trademark Office treat any concurrent or future reply requiring a petition for an extension of time pursuant to §1.136 for its timely submission as incorporating therein a petition for an extension of time for the appropriate length of time. If a petition for extension of time is required to establish copendency with any application claiming priority to this application, Applicant requests that this be considered such a petition.

Applicant authorizes the Commissioner of Patents and Trademarks to charge all required extension of time fees that have not otherwise been paid to Deposit Account No. 22-0350. This authorization remains in force only as long as the Power of Attorney to Customer Number 00490 remains in force.

Respectfully submitted,

VIDAS, ARRETT & STEINKRAUS

Date: September 30, 2010

By: /Jeremy G Laabs/
Jeremy G. Laabs
Registration No.: 53170

6640 Shady Oak Rd., Suite 400
Eden Prairie, MN 55344-7834
Telephone: (952) 563-3000
Facsimile: (952) 563-3001

f:\wpwork\jgl\14675us02_pet_20100929.doc

Under the Paperwork Reduction Act of 1995, no persons are required to respond to a collection of information unless it contains a valid OMB control number.

Application Data Sheet 37 CFR 1.76	Attorney Docket Number	M55.2-14675-US02
	Application Number	
Title of Invention	Archery Bow Cam	

The application data sheet is part of the provisional or nonprovisional application for which it is being submitted. The following form contains the bibliographic data arranged in a format specified by the United States Patent and Trademark Office as outlined in 37 CFR 1.76.
This document may be completed electronically and submitted to the Office in electronic format using the Electronic Filing System (EFS) or the document may be printed and included in a paper filed application.

Secrecy Order 37 CFR 5.2

☐ Portions or all of the application associated with this Application Data Sheet may fall under a Secrecy Order pursuant to 37 CFR 5.2 (Paper filers only. Applications that fall under Secrecy Order may not be filed electronically.)

Applicant Information:

Applicant 1 Remove

Applicant Authority ◉ Inventor ◯ Legal Representative under 35 U.S.C. 117 ◯ Party of Interest under 35 U.S.C. 118

Prefix	Given Name	Middle Name	Family Name	Suffix
	Mathew	A.	McPherson	

Residence Information (Select One) ◉ US Residency ◯ Non US Residency ◯ Active US Military Service

City	Norwalk	State/Province	WI	Country of Residence i	US

Citizenship under 37 CFR 1.41(b) i US

Mailing Address of Applicant:

Address 1	19055 Incline Road Route 2, P.O. 58		
Address 2			
City	Norwalk	State/Province	WI
Postal Code	54648	Country i	US

All Inventors Must Be Listed - Additional Inventor Information blocks may be generated within this form by selecting the **Add** button. Add

Correspondence Information:

Enter either Customer Number or complete the Correspondence Information section below.
For further information see 37 CFR 1.33(a).

☐ **An Address is being provided for the correspondence Information of this application.**

Customer Number	00490	
Email Address	jlaabs@vaslaw.com	Add Email Remove Email

Application Information:

Title of the Invention	Archery Bow Cam		
Attorney Docket Number	M55.2-14675-US02	Small Entity Status Claimed	☒
Application Type	Nonprovisional		
Subject Matter	Utility		
Suggested Class (if any)		Sub Class (if any)	
Suggested Technology Center (if any)			
Total Number of Drawing Sheets (if any)		Suggested Figure for Publication (if any)	

Under the Paperwork Reduction Act of 1995, no persons are required to respond to a collection of information unless it contains a valid OMB control number.

Application Data Sheet 37 CFR 1.76	Attorney Docket Number	M55.2-14675-US02
	Application Number	
Title of Invention	Archery Bow Cam	

Publication Information:

☐	Request Early Publication (Fee required at time of Request 37 CFR 1.219)
☒	**Request Not to Publish.** I hereby request that the attached application not be published under 35 U.S. C. 122(b) and certify that the invention disclosed in the attached application **has not and will not** be the subject of an application filed in another country, or under a multilateral international agreement, that requires publication at eighteen months after filing.

Representative Information:

Representative information should be provided for all practitioners having a power of attorney in the application. Providing this information in the Application Data Sheet does not constitute a power of attorney in the application (see 37 CFR 1.32).
Enter either Customer Number or complete the Representative Name section below. If both sections are completed the Customer Number will be used for the Representative Information during processing.

Please Select One:	◉ Customer Number	◯ US Patent Practitioner	◯ Limited Recognition (37 CFR 11.9)
Customer Number	00490		

Domestic Benefit/National Stage Information:

This section allows for the applicant to either claim benefit under 35 U.S.C. 119(e), 120, 121, or 365(c) or indicate National Stage entry from a PCT application. Providing this information in the application data sheet constitutes the specific reference required by 35 U.S.C. 119(e) or 120, and 37 CFR 1.78(a)(2) or CFR 1.78(a)(4), and need not otherwise be made part of the specification.

Prior Application Status	Pending		Remove
Application Number	Continuity Type	Prior Application Number	Filing Date (YYYY-MM-DD)
	non provisional of	61247473	2009-09-30

Additional Domestic Benefit/National Stage Data may be generated within this form by selecting the **Add** button. Add

Foreign Priority Information:

This section allows for the applicant to claim benefit of foreign priority and to identify any prior foreign application for which priority is not claimed. Providing this information in the application data sheet constitutes the claim for priority as required by 35 U.S.C. 119(b) and 37 CFR 1.55(a).

Remove

Application Number	Country [i]	Parent Filing Date (YYYY-MM-DD)	Priority Claimed
			◯ Yes ◉ No

Additional Foreign Priority Data may be generated within this form by selecting the **Add** button. Add

Assignee Information:

Providing this information in the application data sheet does not substitute for compliance with any requirement of part 3 of Title 37 of the CFR to have an assignment recorded in the Office.

Assignee 1 Remove

Under the Paperwork Reduction Act of 1995, no persons are required to respond to a collection of information unless it contains a valid OMB control number.

Application Data Sheet 37 CFR 1.76	Attorney Docket Number	M55.2-14675-US02
	Application Number	
Title of Invention	Archery Bow Cam	

If the Assignee is an Organization check here. ☐				
Prefix	**Given Name**	Middle Name	**Family Name**	Suffix
Mailing Address Information:				
Address 1				
Address 2				
City		**State/Province**		
Country i		Postal Code		
Phone Number		Fax Number		
Email Address				
Additional Assignee Data may be generated within this form by selecting the **Add** button.				Add

Signature:

A signature of the applicant or representative is required in accordance with 37 CFR 1.33 and 10.18. Please see 37 CFR 1.4(d) for the form of the signature.					
Signature	/Jeremy G Laabs/			Date (YYYY-MM-DD)	2010-09-30
First Name	Jeremy	Last Name	Laabs	Registration Number	53170

This collection of information is required by 37 CFR 1.76. The information is required to obtain or retain a benefit by the public which is to file (and by the USPTO to process) an application. Confidentiality is governed by 35 U.S.C. 122 and 37 CFR 1.14. This collection is estimated to take 23 minutes to complete, including gathering, preparing, and submitting the completed application data sheet form to the USPTO. Time will vary depending upon the individual case. Any comments on the amount of time you require to complete this form and/or suggestions for reducing this burden, should be sent to the Chief Information Officer, U.S. Patent and Trademark Office, U.S. Department of Commerce, P.O. Box 1450, Alexandria, VA 22313-1450. DO NOT SEND FEES OR COMPLETED FORMS TO THIS ADDRESS. **SEND TO: Commissioner for Patents, P.O. Box 1450, Alexandria, VA 22313-1450.**

Privacy Act Statement

The Privacy Act of 1974 (P.L. 93-579) requires that you be given certain information in connection with your submission of the attached form related to a patent application or patent. Accordingly, pursuant to the requirements of the Act, please be advised that: (1) the general authority for the collection of this information is 35 U.S.C. 2(b)(2); (2) furnishing of the information solicited is voluntary; and (3) the principal purpose for which the information is used by the U.S. Patent and Trademark Office is to process and/or examine your submission related to a patent application or patent. If you do not furnish the requested information, the U.S. Patent and Trademark Office may not be able to process and/or examine your submission, which may result in termination of proceedings or abandonment of the application or expiration of the patent.

The information provided by you in this form will be subject to the following routine uses:

1. The information on this form will be treated confidentially to the extent allowed under the Freedom of Information Act (5 U.S.C. 552) and the Privacy Act (5 U.S.C. 552a). Records from this system of records may be disclosed to the Department of Justice to determine whether the Freedom of Information Act requires disclosure of these records.

2. A record from this system of records may be disclosed, as a routine use, in the course of presenting evidence to a court, magistrate, or administrative tribunal, including disclosures to opposing counsel in the course of settlement negotiations.

3. A record in this system of records may be disclosed, as a routine use, to a Member of Congress submitting a request involving an individual, to whom the record pertains, when the individual has requested assistance from the Member with respect to the subject matter of the record.

4. A record in this system of records may be disclosed, as a routine use, to a contractor of the Agency having need for the information in order to perform a contract. Recipients of information shall be required to comply with the requirements of the Privacy Act of 1974, as amended, pursuant to 5 U.S.C. 552a(m).

5. A record related to an International Application filed under the Patent Cooperation Treaty in this system of records may be disclosed, as a routine use, to the International Bureau of the World Intellectual Property Organization, pursuant to the Patent Cooperation Treaty.

6. A record in this system of records may be disclosed, as a routine use, to another federal agency for purposes of National Security review (35 U.S.C. 181) and for review pursuant to the Atomic Energy Act (42 U.S.C. 218(c)).

7. A record from this system of records may be disclosed, as a routine use, to the Administrator, General Services, or his/her designee, during an inspection of records conducted by GSA as part of that agency's responsibility to recommend improvements in records management practices and programs, under authority of 44 U.S.C. 2904 and 2906. Such disclosure shall be made in accordance with the GSA regulations governing inspection of records for this purpose, and any other relevant (i.e., GSA or Commerce) directive. Such disclosure shall not be used to make determinations about individuals.

8. A record from this system of records may be disclosed, as a routine use, to the public after either publication of the application pursuant to 35 U.S.C. 122(b) or issuance of a patent pursuant to 35 U.S.C. 151. Further, a record may be disclosed, subject to the limitations of 37 CFR 1.14, as a routine use, to the public if the record was filed in an application which became abandoned or in which the proceedings were terminated and which application is referenced by either a published application, an application open to public inspections or an issued patent.

9. A record from this system of records may be disclosed, as a routine use, to a Federal, State, or local law enforcement agency, if the USPTO becomes aware of a violation or potential violation of law or regulation.

PATENT

IN THE UNITED STATES PATENT AND TRADEMARK OFFICE

In Re Application of:	Mathew A. McPherson
Application No.:	12/895610
Filed:	September 30, 2010
For:	Archery Bow Cam
Group Art Unit:	3711

Mail Stop Missing Parts
Commissioner for Patents
P.O. Box 1450
Alexandria, VA 22313-1450

Docket No: M55.2P-14675-US02

RESPONSE TO NOTICE OF MISSING PARTS

In response to the Notice to File Missing Parts of Application--Filing Date Granted, mailed October 20, 2010, enclosed for filing please find:

1. Declaration;
2. Power of Attorney from Inventor(s).

Please charge any additional fees or credit any overpayment associated with this communication to the Deposit Account No. 22-0350.

Respectfully submitted,
VIDAS, ARRETT & STEINKRAUS, P.A.

Date: December 15, 2010

By: /Jeremy G Laabs/
Jeremy G. Laabs
Attorney Reg. No. 53170

Suite 400
6640 Shady Oak Rd.
Eden Prairie, MN 55344-7834
Telephone No: (952) 563-3000
Facsimile No: (952) 563-3001

Amendments To The Drawings:

Replacement Drawing Sheet 7 is submitted herewith in which drawing Fig. 7 is included. No new matter was added.

Attachment: Drawing Sheet 7.

The attached Drawing Sheet 7 includes Fig. 7. Reference numeral 48 has been corrected to reference numeral 49. No new matter is being introduced, in that the reference numeral has been corrected to eliminate a clerical error.

Remarks

This Amendment is in response to the Office Action dated **November 20, 2013.** Claims 2 – 11 and 13 - 21 remain in the application.

Applicant has amended the specification herein to correct a typographical error with respect to reference numeral 48 in figure 7. No new matter has been introduced into the application herein.

Claim Rejections – 35 U.S.C §103

Claims 1, 5-13 and 16-20 were rejected where the examiner asserted the same to be obvious under 35 U.S.C. §103 over Simonds '753 in view of Darlington '790. In the office action dated November 20, 2013, claims 2-4, 14, 15, 17 and 21 were objected to, and were indicated to be allowable, if rewritten in independent form to include all of the limitations of the base claim and any intervening claims. Applicant respectfully traverses the rejection of the claims pursuant to 35 U.S.C. §103 herein.

In order to expedite prosecution applicant has rewritten claims 2, 3, 14 and 15 without prejudice to include all of the limitations of the base claim and any intervening claims. Applicant has cancelled claims 1 and 12 without prejudice and applicant intends to pursue the scope of claims 1 and 12 in a subsequent application. Applicant has also amended claims 4-11, 13, and 16-21 without prejudice to amend claim dependency to an allowable independent claim.

For at least the above identified reasons applicant respectfully requests that the rejection of the claims pursuant to 35 U.S.C. §103 be withdrawn, and the reconsideration and allowance of the claims as amended herein. With respect to claims 4-11, 13, and 16-21, Applicant respectfully asserts that the dependent claims 4-11, 13, and 16-21are allowable because they depend from an allowable independent claim. Reconsideration and allowance of

claims 2 – 11 and 13 – 21 is respectfully requested.

CONCLUSION

For at least the above stated reasons, applicant respectfully asserts that applicant's claims herein are allowable over the prior art of record. Reconsideration and early action to that effect is earnestly solicited.

Should the Examiner have any questions concerning this Amendment, then the Examiner is cordially invited to contact the undersigned by telephone, facsimile, and/or E-Mail at the below identified address. If an extension of time is required to make this response timely and no separate petition is enclosed, Applicant hereby petitions for an extension of time sufficient to make the response timely. In the event that the response herein requires the payment of additional government fees and payment is not enclosed, please charge Deposit Account No. 22-0350.

It is believed that claims 2 – 11 and 13 - 21 in the present application are in condition for allowance in view of the foregoing. Applicant respectfully requests reconsideration of the claims herein and that the rejections be withdrawn and the claims allowed. Applicant respectfully requests the Examiner to reconsider the claims herein which Applicant believes are in condition for allowance. Early action to that effect is earnestly solicited.

Respectfully submitted,

VIDAS, ARRETT & STEINKRAUS

Date: December 20, 2013

By: /Jeremy G Laabs/
Jeremy G. Laabs
Registration No.: 53170

6640 Shady Oak Rd., Suite 400
Eden Prairie, MN 55344-7834
Telephone: (952) 563-3000
Facsimile: (952) 563-3001

v:\wpwork\jgl\14675us02_amd_20131212.doc

Remarks

This Amendment is in response to the Advisory Action dated **June 10, 2013**, and is submitted with a Request for Continued Examination**.**

By this amendment, new claim 21 is added. Support for the new claim can be found at least in Figures 1 and 4.

Favorable consideration and prompt allowance of claims 1-21 are earnestly solicited.

Should the Examiner believe that anything further would be desirable in order to place this application in better condition for allowance, the Examiner is invited to contact Applicants' undersigned representative at the telephone number listed below.

Respectfully submitted,

VIDAS, ARRETT & STEINKRAUS

Date: July 1, 2013

By: /Jeremy G Laabs/
Jeremy G. Laabs
Registration No.: 53170

6640 Shady Oak Rd., Suite 400
Eden Prairie, MN 55344-7834
Telephone: (952) 563-3000
Facsimile: (952) 563-3001

v:\wpwork\jgl\14675us02_amd_20130628.doc

Remarks

This Amendment is in response to the Final Office Action dated **March 29, 2013.** Claims 1-20 are pending in the application. The Office Action rejected claims 1-20 under 35 U.S.C. § 103(a) over U.S. Patent No. 4,438,753 to Simonds in view of U.S. Patent No. 6,516,790 to Darlington.

By this amendment, independent claims 1 and 12 are each amended. Support for the amendments can be found at least in Figures 1 and 2. Reconsideration in view of the above amendments and following remarks is requested.

Claim Rejections – 35 U.S.C. § 103(a)

The Office Action rejected claims 1-20 under 35 U.S.C. § 103(a) over Simonds in view of Darlington. These rejections are traversed for at least the reasons asserted in the Response filed March 1, 2013; however, claims 1 and 12 are each amended in an effort to further prosecution of the application.

Claims 1 and 12 each require a first rotatable member to comprise a drawstring track oriented in a first cam plane and a cam track oriented in a second cam plane.

Simonds teaches a cam 7 wherein the tracks are oriented in a common plane, and the modified bow proposed in the rejection would not meet the limitations of claims 1 or 12.

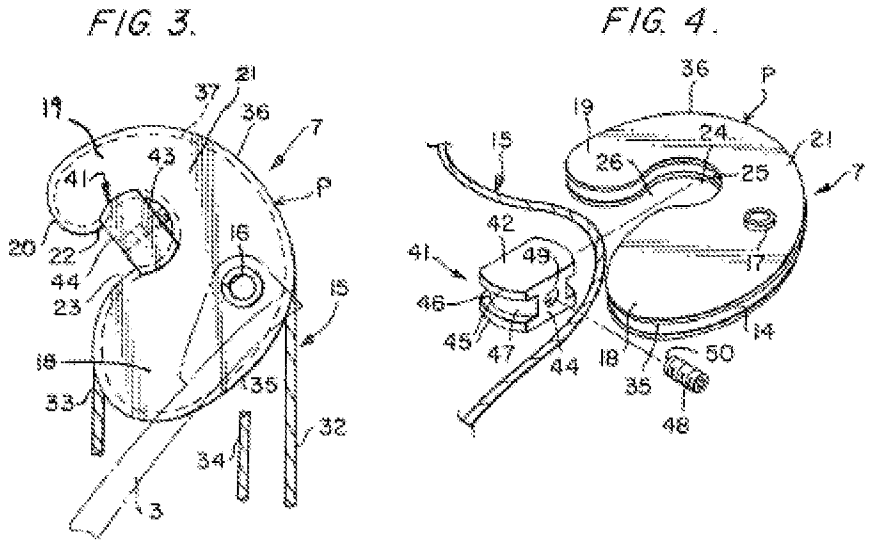

Thus, the amendments are believed to have rendered the rejections moot, and

Applicants request withdrawal of the rejections asserted under 35 USC §103.

Conclusion

Based on at least the foregoing amendments and remarks, Applicants respectfully submit the pending claims are patentable over the applied references. Favorable consideration and prompt allowance of claims 1-20 are earnestly solicited.

Should the Examiner believe that anything further would be desirable in order to place this application in better condition for allowance, the Examiner is invited to contact Applicants' undersigned representative at the telephone number listed below.

Respectfully submitted,

VIDAS, ARRETT & STEINKRAUS

Date: May 29, 2013

By: /Jeremy G Laabs/
Jeremy G. Laabs
Registration No.: 53170

6640 Shady Oak Rd., Suite 400
Eden Prairie, MN 55344-7834
Telephone: (952) 563-3000
Facsimile: (952) 563-3001

v:\wpwork\jgl\14675us02_amd_20130424.doc

Remarks

This Amendment is in response to the Office Action dated **November 2, 2012.** Claims 1-20 are pending in the application. The Office Action rejected claims 1-20 under 35 U.S.C. § 103(a) over U.S. Patent No. 4,438,753 to Simonds in view of U.S. Patent No. 6,516,790 to Darlington.

The rejection asserted in the Office Action is respectfully traversed. Reconsideration in view of the following remarks is requested.

Claim Rejections – 35 U.S.C. § 103(a)

The Office Action rejected claims 1-20 under 35 U.S.C. § 103(a) over Simonds in view of Darlington. This rejection is traversed because a person of ordinary skill in the art would not have been prompted to modify the Simonds bow as proposed in the rejection, and even if the modifications proposed in the rejection were made, the resulting bow would not meet the limitations of the rejected independent claims.

Simonds teaches a bow having cams 7, wherein a cam is shown in Figures 3 and 4, provided below.

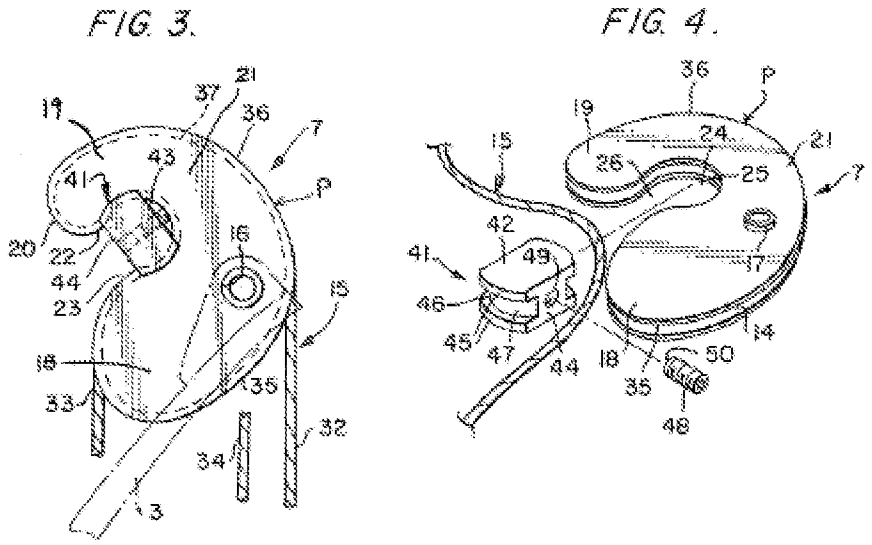

The Simonds bow provides a continuous cable 15 that includes a bowstring portion 32 and a tension cable portion 33. See column 5, lines 8-11. Simonds provides a keeper 41 having a set screw 48 that secures the cable 15 in place. See column 6, lines 30-65. A person

of ordinary skill in the art will recognize that the set screw 48 fastens the cable 15 in place and allows the bowstring portion 32 and tension cable portion 33 to carry different amounts of tension, thus allowing for the compounding action, wherein the holding force of the bowstring portion 32 can be reduced when the bow is drawn.

Although the rejection asserts that the terminal portion 19 of the Simonds cable does not include a terminal (see Office Action at page 3), Applicant believes that a person of ordinary skill in the art would consider the set screw 48 (e.g. pinch point) to be a terminal for both the bowstring portion 32 and a tension cable portion 33

Darlington, as noted by the rejection, teaches separate cable stretches BSC and PC, and separate terminals for each. It can be noted that the BSC terminal is spaced apart from the PC terminal.

The rejection asserts that it would have been obvious to provide Simonds with separate cable stretches and terminals, as taught by Darlington, and asserts that the resulting bow would meet the limitations of the rejected claims; however, Applicant respectfully disagrees.

It should be noted that the Simonds reference is much older than the Darlington reference, as Darlington represents approximately 20 years of advancement in bow design over Simonds. The Simonds cam 7 includes a partially circular opening 24 to receive the keeper 41 because of the single cable stretch 15. If separate BSC and PC cables are used, as taught by Darlington, the partially circular opening 24 and keeper 41 of Simonds would not be necessary. Therefore, Applicant disagrees with the rejection's assertion that a person of ordinary skill in the art would have been prompted to modify the Simonds design in an attempt to provide separate cables. A person of ordinary skill in the art will recognize that the Darlington bow will operate at a substantially higher efficiency than the two-decades older Simonds design, and if they desired separate cable stretches, they would simply use the Darlington design, rather than attempting to modify the Simonds single-cable design. There would be no reason to have a partially circular opening 24 in the cam when separate cables are provided. Therefore, a person of ordinary skill in the art would not have been prompted to modify Simonds as proposed in the rejection.

Additionally, the rejection is vague as to the structure that would result from the modification. The rejection applies the claim limitations to the <u>original</u> Simonds structure, but does not consider the Simonds cam after the modification is performed.

Applicants have provided a marked up version of Simonds Figure 3 below (right), modified to have a terminal post (as taught by Darlington) at the location of the Simonds set screw 48.

FIG. 3. (original)

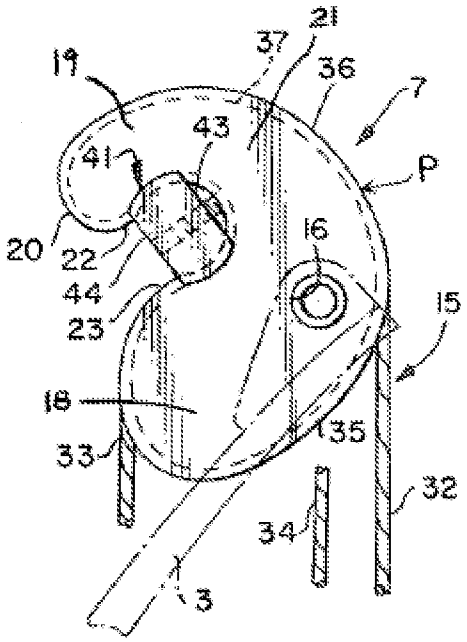

FIG. 3. (modified)

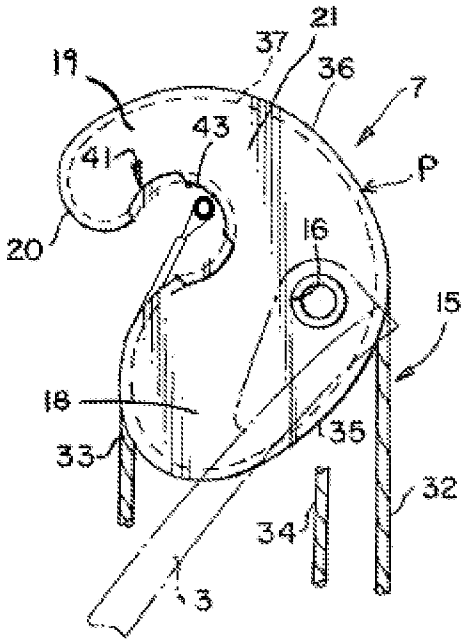

Please note that the tension cable 33 would no longer follow the contours of the partially circular opening 24 – it would extend from the post as shown in the above right picture. The rejection relies upon the cable 33 following the track of the partially circular opening 24. See e.g. marked Fig 3 from the rejection, provided below left.

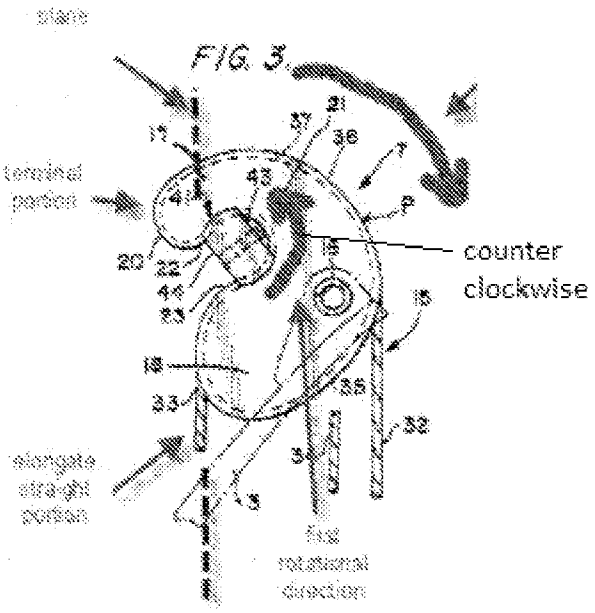

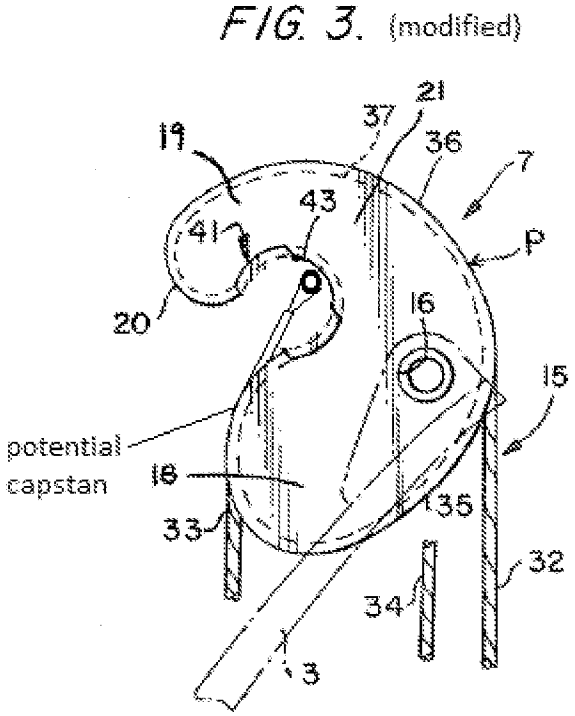

Claim 1 recites, "the power cable wraps around the capstan in a first rotational direction…the first rotatable member rotates in a second rotational direction that is opposite the first rotational direction."

The rejection relies upon the "counter clockwise" arrow (see above left picture) as being opposite the clockwise rotation of the Simonds cam; however, once the cam is modified to have a Darlington terminal, the cable 33 does not follow a counter-clockwise shaped track. Instead, it would contact the cam as shown in the above right picture (see "potential capstan" portion). Please note that wrapping around the "potential capstan" is clockwise, or the same as the direction of cam rotation. Thus, the modified Simonds bow would not meet the limitations of claim 1, and the rejection has not proposed a modification that would reach the recitations of claim 1, or any claim dependent therefrom.

Independent claim 12 recites, "a distance between the terminal and the axle plane is greater than a distance between the capstan and the axle plane."

As shown in the above right picture, the terminal portion would be closer to the axle plane than the "potential capstan" portion, and the modified Simonds bow will not meet the recitations of claim 12, or any claim dependent therefrom.

In view of at least the foregoing remarks, Applicant asserts that a *prima facie* case of obviousness has not been presented against the rejected claims. Applicant respectfully requests withdrawal of the rejections over Simonds in view of Darlington.

Conclusion

Based on at least the foregoing amendments and remarks, Applicants respectfully submit the pending claims are patentable over the applied references. Favorable consideration and prompt allowance of claims 1-20 are earnestly solicited.

Should the Examiner believe that anything further would be desirable in order to place this application in better condition for allowance, the Examiner is invited to contact Applicants' undersigned representative at the telephone number listed below.

Respectfully submitted,

VIDAS, ARRETT & STEINKRAUS

Date: March 1, 2013

By: /Jeremy G Laabs/
Jeremy G. Laabs
Registration No.: 53170

6640 Shady Oak Rd., Suite 400
Eden Prairie, MN 55344-7834
Telephone: (952) 563-3000
Facsimile: (952) 563-3001

\\vas12\company\wpwork\jgl\14675us02_amd_20121129.doc

PATENT

IN THE UNITED STATES PATENT AND TRADEMARK OFFICE

In re Application of:	**Mathew A. McPherson**
Application No.:	**12/895610**
Filed:	**September 30, 2010**
For:	**Archery Bow Cam**
Examiner:	**John Elliott Simms, Jr.**
Group Art Unit:	**3711**

Mail Stop Amendment
Commissioner for Patents
P.O. Box 1450
Alexandria, VA 22313-1450

Docket No.: M55.2P-14675-US02

AMENDMENT

This Amendment is in response to the Office Action dated **November 20, 2013.**

If an extension of time is required to make this response timely and no separate petition is enclosed, Applicant hereby petitions for an extension of time sufficient to make the response timely. In the event that this response requires the payment of government fees and payment is not enclosed, please charge Deposit Account No. 22-0350.

Please amend the application as follows:

PATENT

IN THE UNITED STATES PATENT AND TRADEMARK OFFICE

In re Application of:	**Mathew A. McPherson**
Application No.:	**12/895610**
Filed:	**September 30, 2010**
For:	**Archery Bow Cam**
Examiner:	**John Elliott Simms, Jr.**
Group Art Unit:	**3711**

Mail Stop Amendment
Commissioner for Patents
P.O. Box 1450
Alexandria, VA 22313-1450

Docket No.: M55.2P-14675-US02

RESPONSE

This is in response to the Office Action dated **November 2, 2012.**

If an extension of time is required to make this response timely and no separate petition is enclosed, Applicant hereby petitions for an extension of time sufficient to make the response timely. In the event that this response requires the payment of government fees and payment is not enclosed, please charge Deposit Account No. 22-0350.

Please consider the following:

PATENT

IN THE UNITED STATES PATENT AND TRADEMARK OFFICE

In re Application of:	**Mathew A. McPherson**
Application No.:	**12/895610**
Filed:	**September 30, 2010**
For:	**Archery Bow Cam**
Examiner:	**John Elliott Simms, Jr.**
Group Art Unit:	**3711**

Commissioner for Patents
P.O. Box 1450
Alexandria, VA 22313-1450

Docket No.: M55.2P-14675-US02

AMENDMENT FILED WITH RCE

This Amendment is filed in response to the Advisory Action dated **June 10, 2013.**

If an extension of time is required to make this response timely and no separate petition is enclosed, Applicant hereby petitions for an extension of time sufficient to make the response timely. In the event that this response requires the payment of government fees and payment is not enclosed, please charge Deposit Account No. 22-0350.

Please amend the application as follows:

UNITED STATES PATENT AND TRADEMARK OFFICE

UNITED STATES DEPARTMENT OF COMMERCE
United States Patent and Trademark Office
Address: COMMISSIONER FOR PATENTS
P.O. Box 1450
Alexandria, Virginia 22313-1450
www.uspto.gov

APPLICATION NO.	FILING DATE	FIRST NAMED INVENTOR	ATTORNEY DOCKET NO.	CONFIRMATION NO.
12/895,610	09/30/2010	Mathew A. McPherson	M55.2P-14675-US02	8071

490 7590 06/10/2013
VIDAS, ARRETT & STEINKRAUS, P.A.
Richard A. Arrett
SUITE 400, 6640 SHADY OAK ROAD
6640 Shady Oak Rd.
EDEN PRAIRIE, MN 55344

EXAMINER
SIMMS JR, JOHN ELLIOTT

ART UNIT	PAPER NUMBER
3711	

NOTIFICATION DATE	DELIVERY MODE
06/10/2013	ELECTRONIC

Please find below and/or attached an Office communication concerning this application or proceeding.

The time period for reply, if any, is set in the attached communication.

Notice of the Office communication was sent electronically on above-indicated "Notification Date" to the following e-mail address(es):

mail@vaslaw.com
rleaf@vaslaw.com
rarrett@vaslaw.com

Advisory Action Before the Filing of an Appeal Brief	**Application No.** *12/895,610*	**Applicant(s)** MCPHERSON, MATHEW A.
	Examiner JOHN E. SIMMS JR	**Art Unit** 3711

--The MAILING DATE of this communication appears on the cover sheet with the correspondence address --

THE REPLY FILED 29 May 2013 FAILS TO PLACE THIS APPLICATION IN CONDITION FOR ALLOWANCE.

NO NOTICE OF APPEAL FILED

1. ☒ The reply was filed after a final rejection. No Notice of Appeal has been filed. To avoid abandonment of this application, applicant must timely file one of the following replies: (1) an amendment, affidavit, or other evidence, which places the application in condition for allowance;

(2) a Notice of Appeal (with appeal fee) in compliance with 37 CFR 41.31; or (3) a Request for Continued Examination (RCE) in compliance with 37 CFR 1.114 if this is a utility or plant application. Note that RCEs are not permitted in design applications. The reply must be filed within one of the following time periods:

a) ☐ The period for reply expires _____months from the mailing date of the final rejection.

b) ☒ The period for reply expires on: (1) the mailing date of this Advisory Action; or (2) the date set forth in the final rejection, whichever is later. In no event, however, will the statutory period for reply expire later than SIX MONTHS from the mailing date of the final rejection.

c) ☐ A prior Advisory Action was mailed more than 3 months after the mailing date of the final rejection in response to a first after-final reply filed within 2 months of the mailing date of the final rejection. The current period for reply expires months from the mailing date of *the prior Advisory Action* or SIX MONTHS from the mailing date of the final rejection, whichever is earlier.

Examiner Note: If box 1 is checked, check either box (a), (b) or (c). ONLY CHECK BOX (b) WHEN THIS ADVISORY ACTION IS THE FIRST RESPONSE TO APPLICANT'S FIRST AFTER-FINAL REPLY WHICH WAS FILED WITHIN TWO MONTHS OF THE FINAL REJECTION. ONLY CHECK BOX (c) IN THE LIMITED SITUATION SET FORTH UNDER BOX (c). See MPEP 706.07(f).

Extensions of time may be obtained under 37 CFR 1.136(a). The date on which the petition under 37 CFR 1.136(a) and the appropriate extension fee have been filed is the date for purposes of determining the period of extension and the corresponding amount of the fee. The appropriate extension fee under 37 CFR 1.17(a) is calculated from: (1) the expiration date of the shortened statutory period for reply originally set in the final Office action; or (2) as set forth in (b) or (c) above, if checked. Any reply received by the Office later than three months after the mailing date of the final rejection, even if timely filed, may reduce any earned patent term adjustment. See 37 CFR 1.704(b).

NOTICE OF APPEAL

2. ☐ The Notice of Appeal was filed on _____. A brief in compliance with 37 CFR 41.37 must be filed within two months of the date of filing the Notice of Appeal (37 CFR 41.37(a)), or any extension thereof (37 CFR 41.37(e)), to avoid dismissal of the appeal. Since a Notice of Appeal has been filed, any reply must be filed within the time period set forth in 37 CFR 41.37(a).

AMENDMENTS

3. ☒ The proposed amendments filed after a final rejection, but prior to the date of filing a brief, will not be entered because

a) ☒ They raise new issues that would require further consideration and/or search (see NOTE below);

b) ☐ They raise the issue of new matter (see NOTE below);

c) ☒ They are not deemed to place the application in better form for appeal by materially reducing or simplifying the issues for appeal; and/or

d) ☐ They present additional claims without canceling a corresponding number of finally rejected claims.

NOTE: _____. (See 37 CFR 1.116 and 41.33(a)).

4. ☐ The amendments are not in compliance with 37 CFR 1.121. See attached Notice of Non-Compliant Amendment (PTOL-324).

5. ☐ Applicant's reply has overcome the following rejection(s): _____.

6. ☐ Newly proposed or amended claim(s) _____ would be allowable if submitted in a separate, timely filed amendment canceling the non-allowable claim(s).

7. ☒ For purposes of appeal, the proposed amendment(s): (a) ☒ will not be entered, or (b) ☐ will be entered, and an explanation of how the new or amended claims would be rejected is provided below or appended.

AFFIDAVIT OR OTHER EVIDENCE

8. ☐ The affidavit or other evidence filed after final action, but before or on the date of filing a Notice of Appeal will not be entered because applicant failed to provide a showing of good and sufficient reasons why the affidavit or other evidence is necessary and was not earlier presented. See 37 CFR 1.116(e).

9. ☐ The affidavit or other evidence filed after the date of filing the Notice of Appeal, but prior to the date of filing a brief, will not be entered because the affidavit or other evidence failed to overcome all rejections under appeal and/or appellant fails to provide a showing of good and sufficient reasons why it is necessary and was not earlier presented. See 37 CFR 41.33(d)(1).

10. ☐ The affidavit or other evidence is entered. An explanation of the status of the claims after entry is below or attached.

REQUEST FOR RECONSIDERATION/OTHER

11. ☒ The request for reconsideration has been considered but does NOT place the application in condition for allowance because: See Continuation Sheet.

12. ☐ Note the attached Information *Disclosure Statement*(s). (PTO/SB/08) Paper No(s). _____

13. ☐ Other: _____.

STATUS OF CLAIMS

14. The status of the claim(s) is (or will be) as follows:

Claim(s) allowed: .

Claim(s) objected to: .

Claim(s) rejected: 1-20.

Claim(s) withdrawn from consideration: .

/Gene Kim/ Supervisory Patent Examiner, Art Unit 3711	/JOHN E SIMMS JR/ Examiner, Art Unit 3711

IPR2024-00523
Ravin EX1014 Page 203

Continuation of 11. does NOT place the application in condition for allowance because: The proposed amendment introduces new claim limitations which require further search and consideration.

IPR2024-00523
Ravin EX1014 Page 204

Archery Bow Cam

ABSTRACT OF THE DISCLOSURE

In at least one embodiment, an archery bow includes a rotatable member comprising a cam track, a capstan and a terminal. A drawstring extends from the first rotatable member. A power cable is attached to the terminal and extends away from the rotatable member. The power cable comprises an elongate straight portion located near the rotatable member, a capstan portion in contact with said capstan and a terminal portion in contact with said terminal. In a brace condition, the power cable wraps around the capstan in a first rotational direction as the power cable is traversed from the elongate straight portion to the terminal portion. When the bow is drawn from the brace condition, the rotatable member rotates in a second rotational direction that is opposite the first rotational direction.