US009909831B2

(12) **United States Patent**
**McPherson**

(10) **Patent No.: US 9,909,831 B2**
(45) **Date of Patent: *Mar. 6, 2018**

(54) **ARCHERY BOW CAM**

(71) Applicant: **MCP IP, LLC**, Sparta, WI (US)

(72) Inventor: **Mathew A. McPherson**, Norwalk, WI (US)

(73) Assignee: **MCP IP, LLC**, Sparta, WI (US)

( * ) Notice: Subject to any disclaimer, the term of this patent is extended or adjusted under 35 U.S.C. 154(b) by 0 days.

This patent is subject to a terminal disclaimer.

(21) Appl. No.: **15/166,094**

(22) Filed: **May 26, 2016**

(65) **Prior Publication Data**

US 2016/0273867 A1 Sep. 22, 2016

**Related U.S. Application Data**

(63) Continuation of application No. 14/230,659, filed on Mar. 31, 2014, now Pat. No. 9,354,017, which is a continuation of application No. 12/895,610, filed on Sep. 30, 2010, now Pat. No. 8,683,989.

(60) Provisional application No. 61/247,473, filed on Sep. 30, 2009.

(51) **Int. Cl.**
***F41B 5/10*** (2006.01)

(52) **U.S. Cl.**
CPC ..... ***F41B 5/105*** (2013.01); ***F41B 5/10*** (2013.01)

(58) **Field of Classification Search**
CPC ..... F41B 5/105; F41B 5/10
See application file for complete search history.

(56) **References Cited**

U.S. PATENT DOCUMENTS

| | | | |
|---|---|---|---|
| 3,486,495 | A | 12/1969 | Allen |
| 4,060,066 | A | 11/1977 | Kudlacek |
| 4,064,862 | A | 12/1977 | Groner |
| 4,438,753 | A | 3/1984 | Simonds |
| 4,461,267 | A | 7/1984 | Simonds et al. |
| 4,515,142 | A | 5/1985 | Nurney |
| 4,519,374 | A | 5/1985 | Miller |
| 4,739,744 | A | 4/1988 | Nurney |
| 4,774,927 | A | 10/1988 | Larson |
| 4,838,236 | A | 6/1989 | Kudlacek |
| 4,986,250 | A | 1/1991 | Darlington |
| 5,040,520 | A | 8/1991 | Nurney |
| 5,368,006 | A | 11/1994 | McPherson |
| 5,791,322 | A | 8/1998 | McPherson |
| 5,791,323 | A | 8/1998 | Dunlap |
| 5,934,265 | A | 8/1999 | Darlington |
| 5,960,778 | A | 10/1999 | Larson |
| 6,082,347 | A | 7/2000 | Darlington |

(Continued)

*Primary Examiner* — John E Simms, Jr.

(57) **ABSTRACT**

In at least one embodiment, an archery bow includes a rotatable member comprising a cam track, a capstan and a terminal. A drawstring extends from the first rotatable member. A power cable is attached to the terminal and extends away from the rotatable member. The power cable comprises an elongate straight portion located near the rotatable member, a capstan portion in contact with said capstan and a terminal portion in contact with said terminal. In a brace condition, the power cable wraps around the capstan in a first rotational direction as the power cable is traversed from the elongate straight portion to the terminal portion. When the bow is drawn from the brace condition, the rotatable member rotates in a second rotational direction that is opposite the first rotational direction.

**19 Claims, 7 Drawing Sheets**

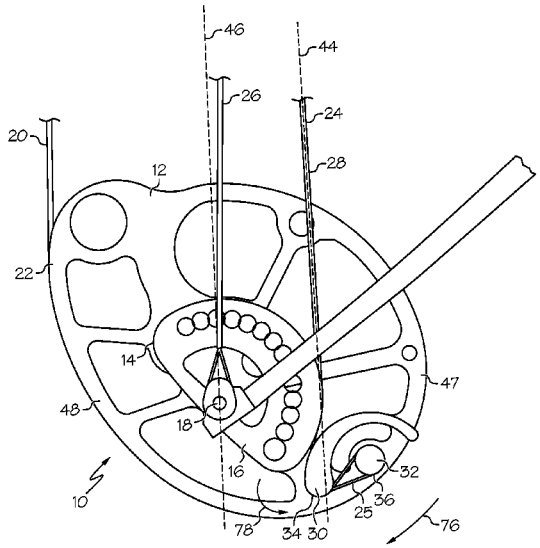

(56) **References Cited**

U.S. PATENT DOCUMENTS

| | | | | |
|---|---|---|---|---|
| RE37,544 | E | 2/2002 | Darlington | |
| 6,360,735 | B1 | 3/2002 | Larson et al. | |
| 6,446,619 | B1 | 9/2002 | McPherson | |
| 6,516,790 | B1 * | 2/2003 | Darlington | F41B 5/10 124/25.6 |
| 6,691,692 | B1 | 2/2004 | Adkins | |
| 6,871,643 | B2 | 3/2005 | Cooper et al. | |
| 6,966,312 | B1 * | 11/2005 | Larson | F41B 5/10 124/25.6 |
| 6,990,970 | B1 | 1/2006 | Darlington | |
| 6,994,079 | B1 * | 2/2006 | Darlington | F41B 5/10 124/25.6 |
| 7,082,937 | B1 | 8/2006 | Land | |
| 7,188,615 | B2 | 3/2007 | Chang | |
| RE39,880 | E | 10/2007 | McPherson | |
| 7,305,979 | B1 | 12/2007 | Yehle | |
| 2004/0074485 | A1 * | 4/2004 | Cooper | F41B 5/10 124/25.6 |
| 2009/0188482 | A1 * | 7/2009 | Strother | F41B 5/10 124/25.6 |
| 2009/0288650 | A1 * | 11/2009 | Batdorf | F41B 5/10 124/25.6 |
| 2010/0051005 | A1 * | 3/2010 | Wilson | F41B 5/105 124/25.6 |
| 2010/0089375 | A1 | 4/2010 | McPherson et al. | |
| 2012/0222662 | A1 * | 9/2012 | Nebergall | F41B 5/10 124/25.6 |

* cited by examiner

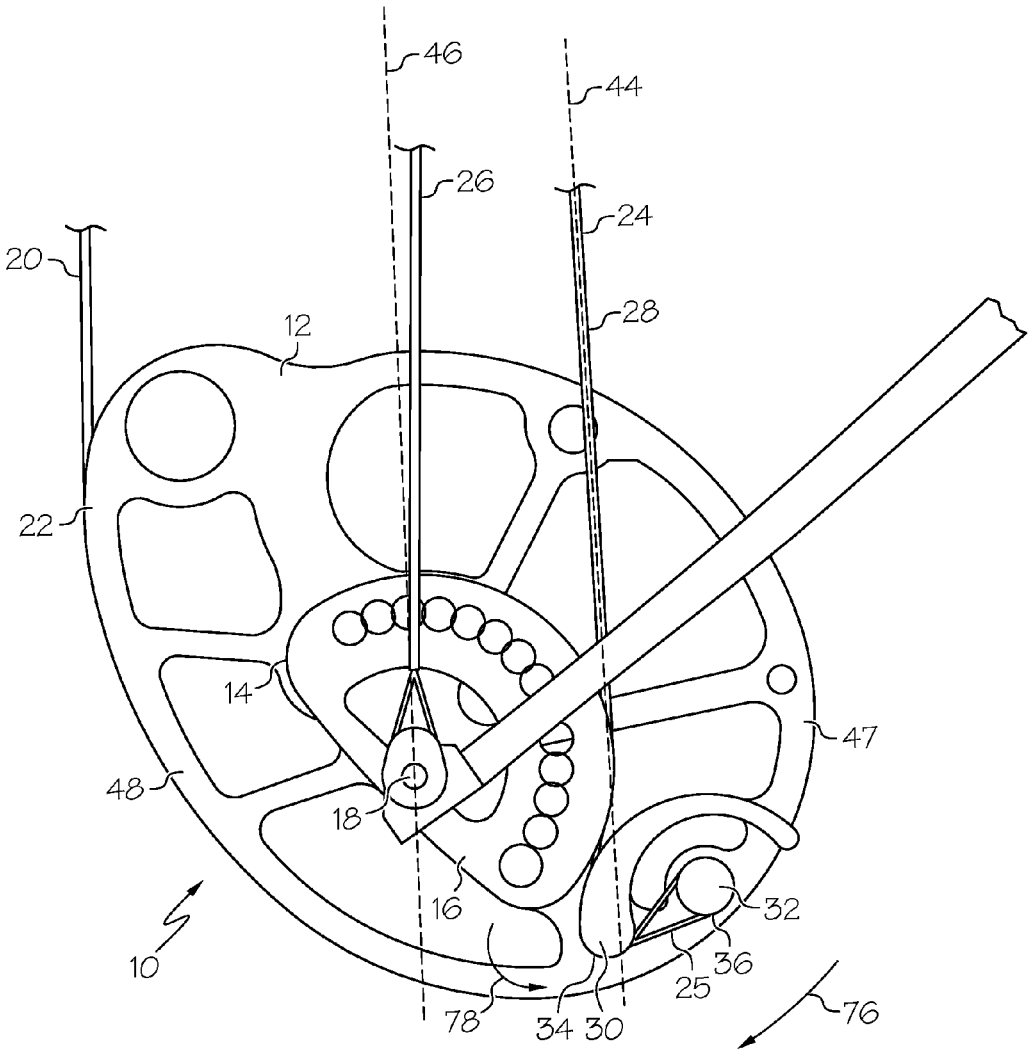


FIG. 1

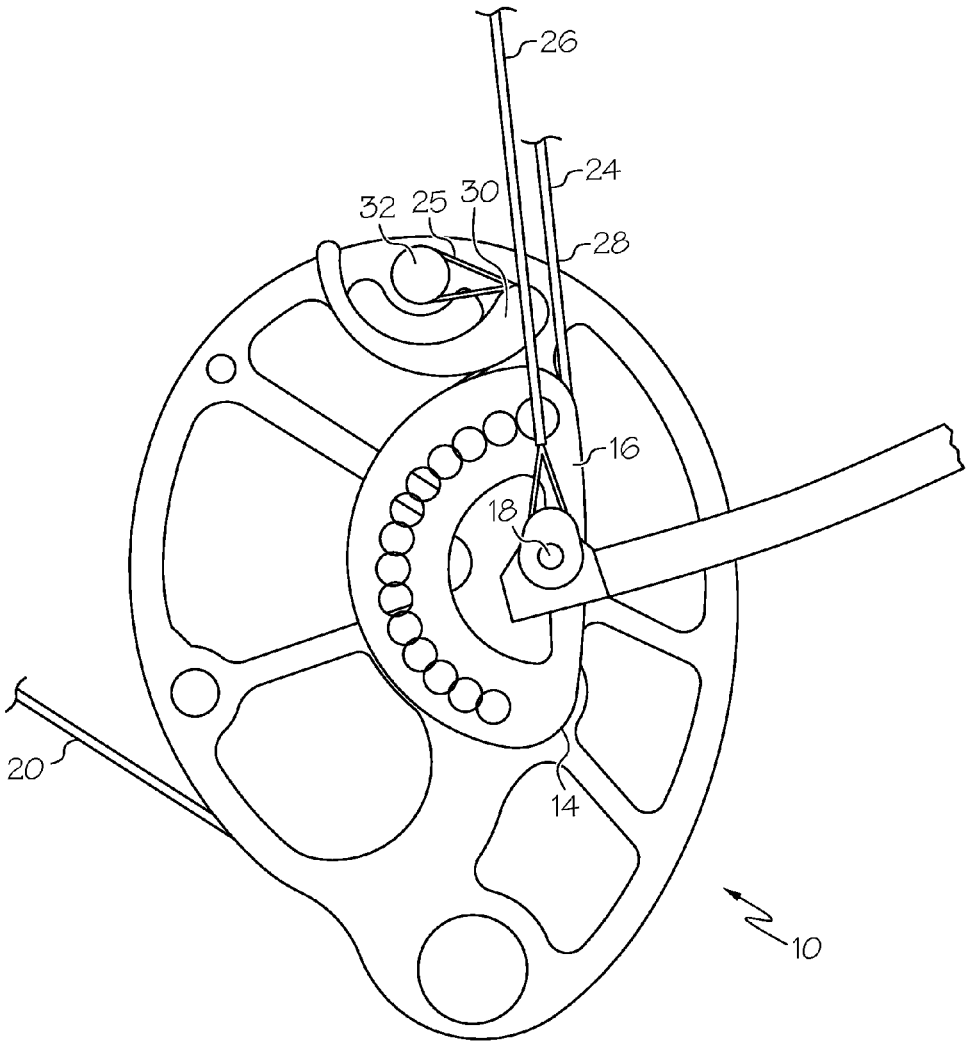


FIG. 2

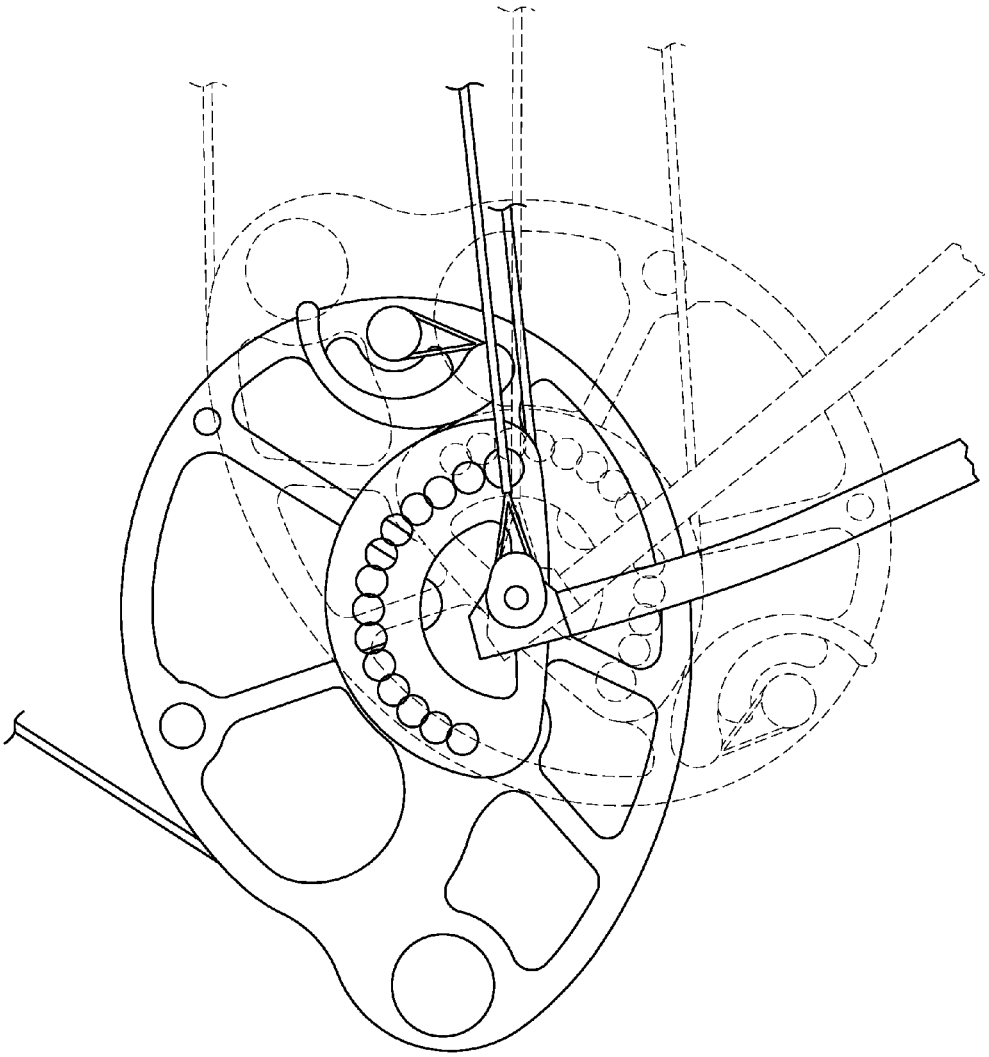

FIG. 3

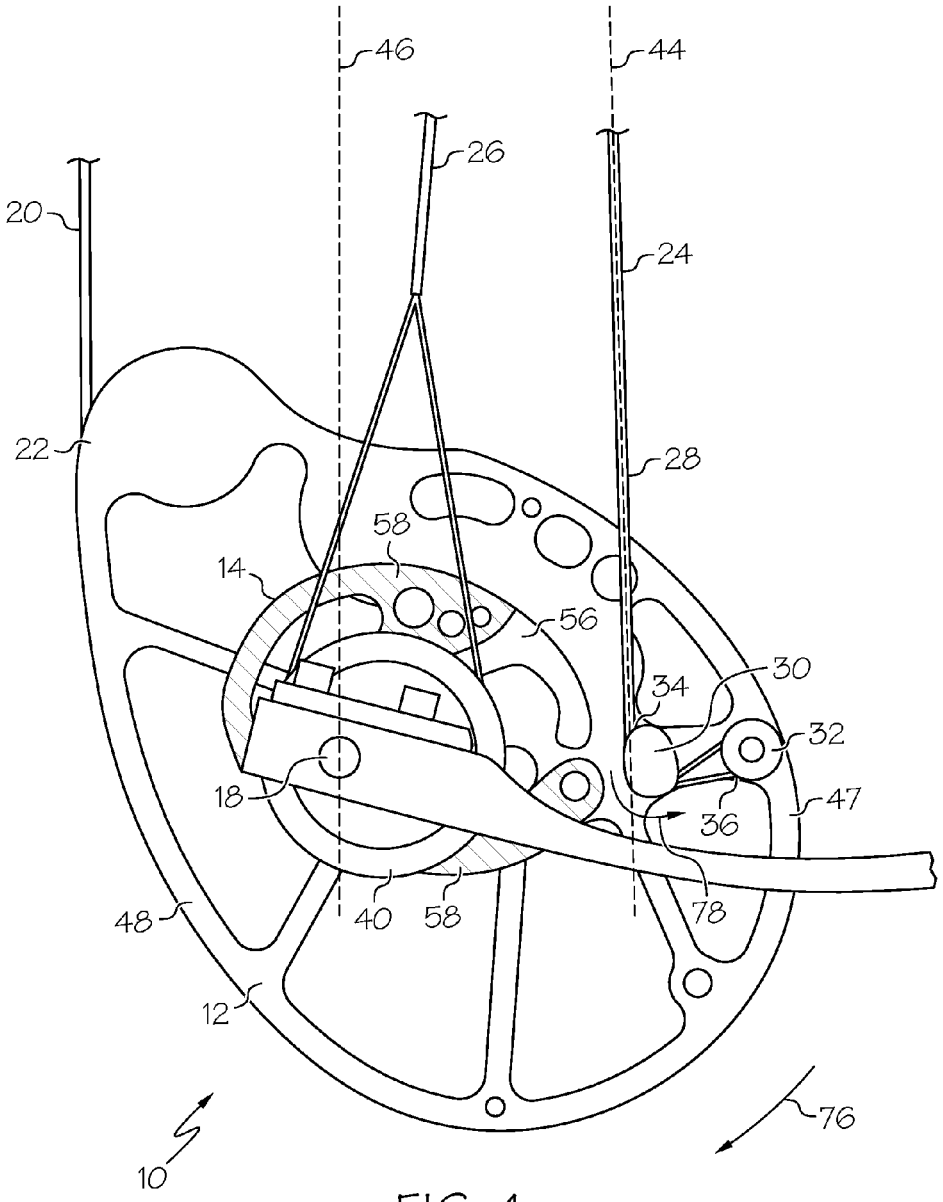


FIG. 4

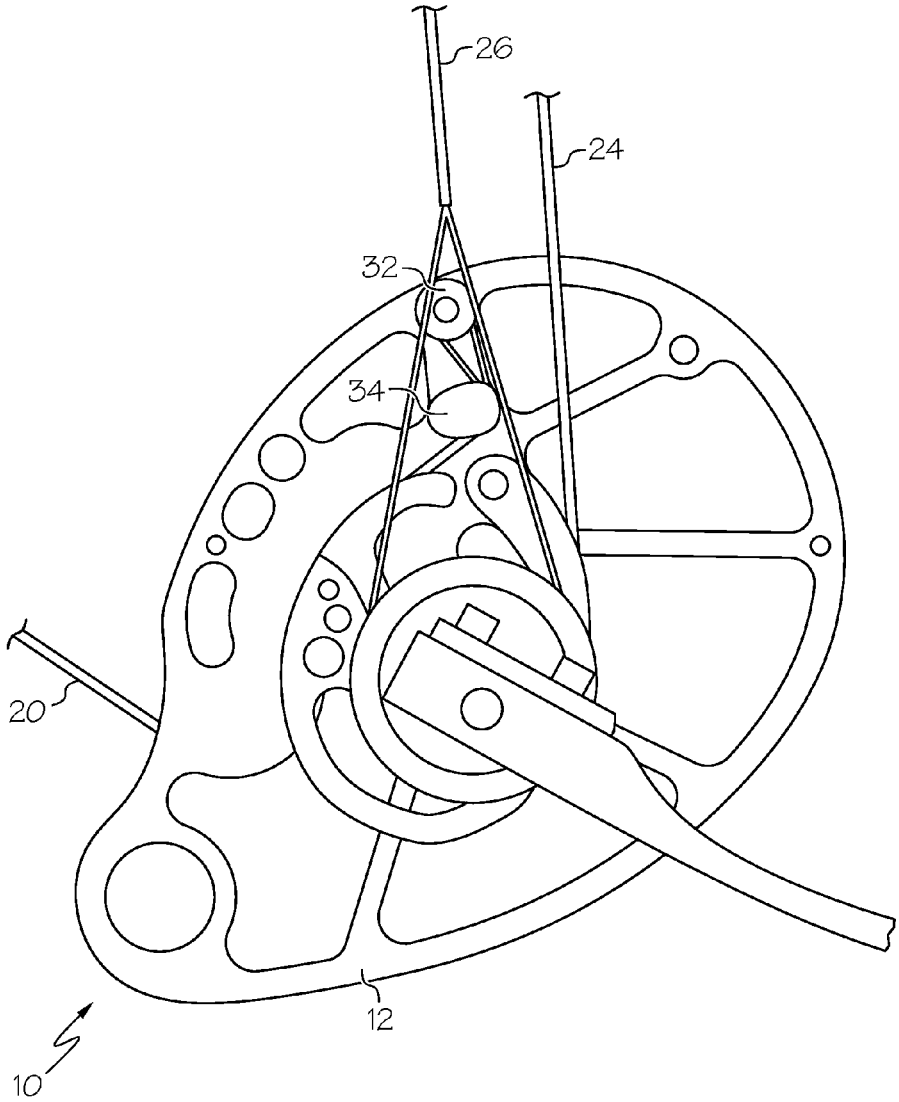


FIG. 5

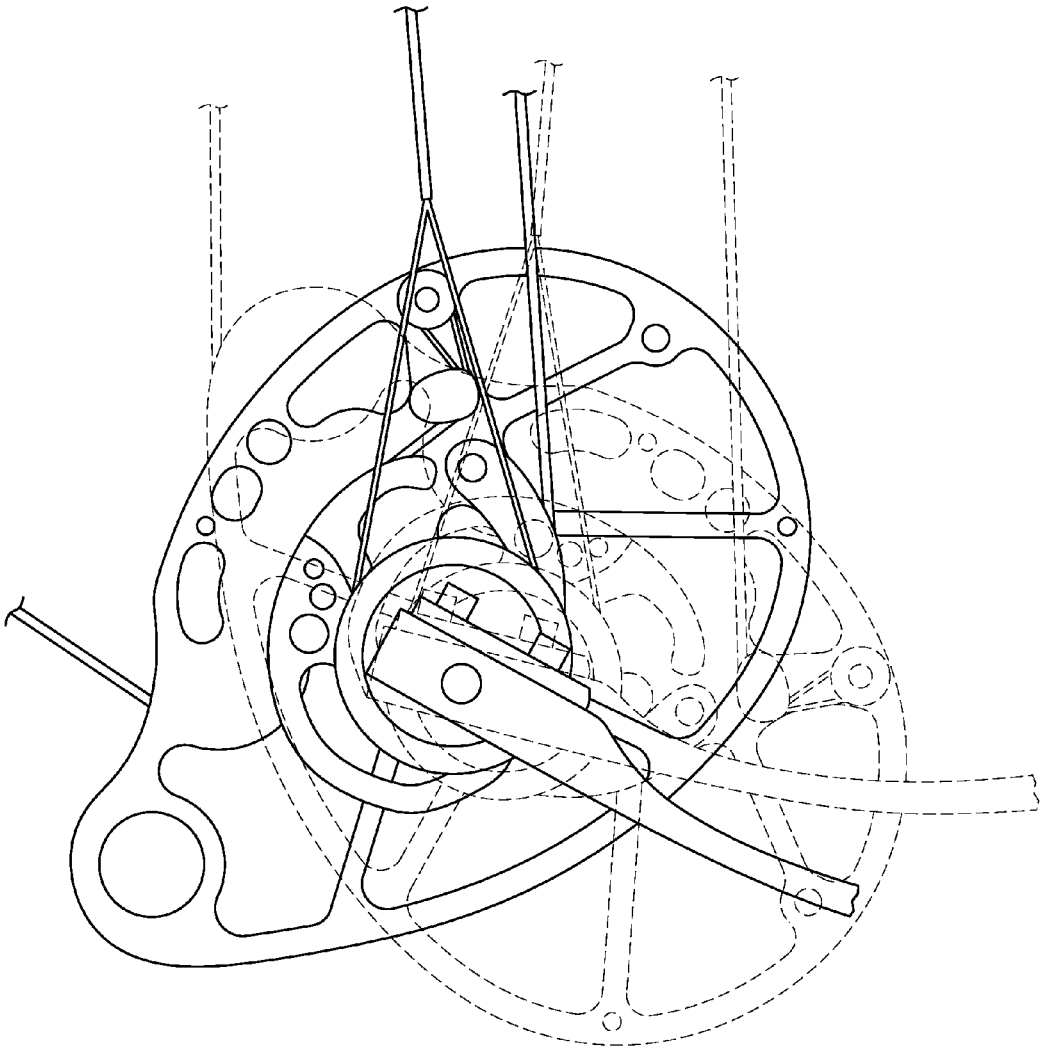

FIG. 6

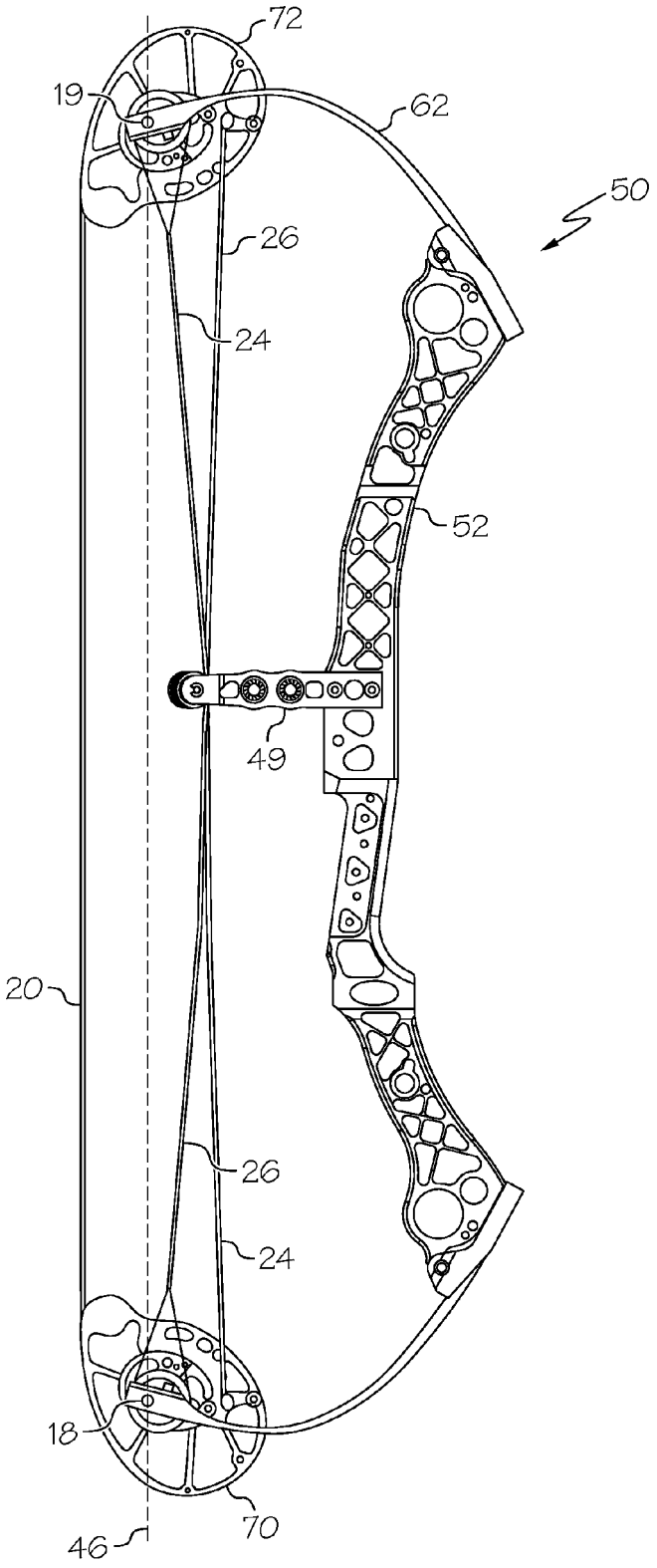


FIG. 7

# ARCHERY BOW CAM

## CROSS-REFERENCE TO RELATED APPLICATIONS

This application is a continuation of U.S. patent application Ser. No. 14/230,659, filed Mar. 31, 2014, which is a continuation of U.S. patent application Ser. No. 12/895,610, filed Sep. 30, 2010, now U.S. Pat. No. 8,683,989, which claims the benefit of U.S. Provisional Patent Application No. 61/247,473, the entire disclosures of which are hereby incorporated herein by reference.

## BACKGROUND OF THE INVENTION

This invention relates generally to archery bows and more specifically to a cam configuration suitable for use in bows, such as a compound bow.

Archery bows are known in the art, and are generally configured for use by a particular user. Variable aspects of the bow, such as draw weight and draw length, are set to match the size and strength capabilities and preferences of the user. Adjustability of a bow allows for the bow to change with the user as the user's capabilities and preferences change over time. Adjustability also allows for a bow to be reconfigured for a different user.

There remains a need for novel bow and cam designs that provide for greater adjustability and are suitable for a wider range of potential users than prior art designs. There remains a need for novel bow and cam designs that allow for a greater range of draw weights and draw lengths to be achieved in a given bow.

All US patents and applications and all other published documents mentioned anywhere in this application are incorporated herein by reference in their entirety.

Without limiting the scope of the invention a brief summary of some of the claimed embodiments of the invention is set forth below. Additional details of the summarized embodiments of the invention and/or additional embodiments of the invention may be found in the Detailed Description of the Invention below.

A brief abstract of the technical disclosure in the specification is provided as well only for the purposes of complying with 37 C.F.R. 1.72. The abstract is not intended to be used for interpreting the scope of the claims.

## BRIEF SUMMARY OF THE INVENTION

In at least one embodiment, an archery bow comprises a riser, a first limb and a second limb supported by the riser, a first rotatable member supported by the first limb on a first axle and a second rotatable member supported by the second limb on a second axle. The first rotatable member comprises a cam track, a capstan and a terminal. A drawstring extends between the first rotatable member and the second rotatable member. A power cable is attached to said terminal and extends toward the second limb. The power cable comprises an elongate straight portion located near said first rotatable member, a capstan portion in contact with said capstan and a terminal portion in contact with said terminal. In a brace condition, the power cable wraps around the capstan in a first rotational direction as the power cable is traversed from the elongate straight portion to the terminal portion. When the bow is drawn from the brace condition, the first rotatable member rotates in a second rotational direction that is opposite the first rotational direction.



In at least one embodiment, a bow further comprises a second power cable and the second rotatable member comprises a second cam track, a second capstan and a second terminal. The second power cable is attached to the second terminal and extends toward the first limb. The second power cable comprises a second elongate straight portion located near the second rotatable member, a second capstan portion in contact with the second capstan and a second terminal portion in contact with the second terminal. In the brace condition, the second power cable wraps around the second capstan in the second rotational direction as the second power cable is traversed from the second elongate straight portion to the second terminal portion. When the bow is drawn from the brace condition, the second rotatable member rotates in the first rotational direction.

In at least one embodiment, the second rotatable member comprises a mirror image of the first rotatable member.

In some embodiments, in the brace condition, the elongate straight portion of the power cable defines a plane, wherein said first axle and said terminal are located on opposite sides of said plane.

In some embodiments, in the drawn condition, the capstan is located closer to the elongate straight portion than the terminal.

In some embodiments, in the brace condition, the power cable is not oriented in the cam track.

In some embodiments, a distance between the first axle and the terminal is greater than a distance between the first axle and the cam track.

In some embodiments, at least a portion of the cam track comprises a module that is attached to said first rotatable member. The module can be rotatable with respect to the first rotatable member and/or can be removable and replaceable with a separate module.

In at least one embodiment, an archery bow comprises a riser, a first limb and a second limb supported by the riser, a first rotatable member supported by the first limb on a first axle and a second rotatable member supported by the second limb on a second axle. The first axle and the second axle define an axle plane. The first rotatable member comprises a cam track, a capstan and a terminal. A drawstring extends between the first rotatable member and the second rotatable member. The drawstring leaves the first rotatable member at an exit location. A power cable is attached to the terminal and extends toward the second limb. The power cable comprises a capstan portion in contact with said capstan and a terminal portion in contact with said terminal. In a brace condition, the axle plane divides the first rotatable member to a first part and a second part, wherein the capstan and the terminal are located in the first part and the drawstring exit location is located in the second part. A distance between the terminal and the axle plane is greater than a distance between the capstan and the axle plane.

These and other embodiments which characterize the invention are pointed out with particularity in the claims annexed hereto and forming a part hereof. However, for a better understanding of the invention, its advantages and objectives obtained by its use, reference can be made to the drawings which form a further part hereof and the accompanying descriptive matter, in which there are illustrated and described various embodiments of the invention.

## BRIEF DESCRIPTION OF THE DRAWINGS

A detailed description of the invention is hereafter described with specific reference being made to the drawings.

FIG. **1** shows an embodiment of a cam suitable for use in a bow. The cam is shown in a brace orientation.

FIG. **2** shows the cam of FIG. **1** in a drawn orientation.

FIG. **3** is a combination of FIGS. **1** and **2**, which shows how the cam rotates.

FIG. **4** shows another embodiment of a cam in a brace orientation.

FIG. **5** shows the cam of FIG. **4** in a drawn orientation.

FIG. **6** is a combination of FIGS. **4** and **5**, which shows how the cam rotates.

FIG. **7** shows an embodiment of a compound archery bow.

## DETAILED DESCRIPTION OF THE INVENTION

While this invention may be embodied in many different forms, there are described in detail herein specific embodiments of the invention. This description is an exemplification of the principles of the invention and is not intended to limit the invention to the particular embodiments illustrated.

For the purposes of this disclosure, like reference numerals in the figures shall refer to like features unless otherwise indicated.

FIG. **7** shows an embodiment of a compound archery bow **50**. Compound bows are generally known, for example as described in US 2010/0089375, the entire content of which is hereby incorporated herein by reference. Although FIG. **7** shows a two cam bow, the cam configurations disclosed herein can be used on any type of compound archery bow, such as single cam bows, 1.5 cam bows, binary cam bows, crossbows, etc.

In some embodiments, a compound bow **50** comprises a riser **52**, a first limb **60** and a second limb **62**. The first limb **60** supports a first rotatable member **70** on a first axle **18**, and the second limb **62** supports a second rotatable member **72** on a second axle **19**. The first and second axles **18**, **19** define an axle plane **46**. A drawstring **20** extends between the rotatable members **70**, **72**. As shown in FIG. **7**, each rotatable member **70**, **72** comprises a cam. The bow **50** comprises a power cable **24** that attaches to the first rotatable member **70** and extends toward the second limb **62**, terminating on the second rotatable member **72**, or in some embodiments, on the second axle **19** or second limb **62**.

The bow of FIG. **7** further comprises a second power cable **26** that attaches to the second rotatable member **72** and extends toward the first limb **60**, terminating on the first rotatable member **70**, or in some embodiments, on the first axle **18** or first limb **60**. In some embodiments, the configuration of the second rotatable member **72** is a mirror image of the first rotatable member **70**. In some embodiments, the first and second power cables **24**, **26** are essentially mirrored; however, a person of ordinary skill in the art would recognize that the cables **24**, **26** may be held in a slightly displaced configuration by a cable guard **49**.

The bow can be drawn throughout a plurality of draw orientations. An at-rest condition is generally considered a brace condition. The bow can be drawn by applying a rearward force to the drawstring **20**, which causes the rotatable members **70**, **72** to rotate. As the bow is drawn, the limbs **60**, **62** flex and store energy. As the bow reached a fully drawn condition, the force required to hold back the drawstring **20** will let off due to the compounding configuration of the cam(s) and power cable(s).

FIGS. **1-3** show an embodiment of a cam **10** that is suitable for use in a compound archery bow **50**, for example as the first rotatable member **70** and/or the second rotatable member **72** shown in FIG. **7**. A drawstring **20** is attached to the cam **10**, which will typically extend to another rotatable member of the bow, such as a pulley or another cam, such as the second rotatable member **72** shown in FIG. **7**. A first power cable **24** is also attached to the cam **10**. The first power cable **24** is arranged to contact a cam track **14** as the bow is drawn. The specific contour of the cam track **14** can impact and/or control various characteristics of the bow, such as the draw force profile, the draw length, the amount of force let-off provided by the compounding action, etc.

In some embodiments, the cam **10** comprises a body portion **12** and an adjustable module **16**. The adjustable module **16** comprises at least a portion of the cam track **14**, the orientation of the module **16** is adjustable with respect to the body portion **12**. The module **16** is typically fastened to the body portion **12** in one of a plurality of predetermined orientations. As shown in FIG. **1**, the module **16** is rotatable about the axis of cam rotation, such as the axle **18**. Adjustment of the module **16** with respect to the body portion **12** will change characteristics of the bow, such as the draw length. In some embodiments, a module **16** can be removed and replaced with a second, interchangeable module that has a different shape. Adjustable modules and interchangeable modules are also discussed in US 2010/0089375.

The first power cable **24** will extend from an opposite limb or rotatable member to the cam **10**. A second power cable **26** is also shown, which terminates by attaching to the axle **18**. In some embodiments, the first power cable **24** will contact a portion of the cam surface/track **14** in the brace condition, depending on the specific cam design. The first power cable **24** includes an elongate straight portion **28** located near the cam **10**. The first power cable **24** extends around a capstan **30** and attaches to a terminal post **32**. The power cable **24** comprises a capstan portion **34** in contact with the capstan **30** and a terminal portion **36** in contact with the terminal **32**. Desirably, the capstan **30** comprises a groove or track for the cable **24**, which is aligned in a common plane with the cam surface/track **14**. In some embodiments, the capstan **30** comprises a portion of the cam body **12**.

In some embodiments, the location of the terminal post **32** and the shape of the capstan **30** result in the power cable **24** wrapping around the capstan **30** in a direction away from the axle **18** before terminating on the post **32**. In some embodiments, the cable wraps around the capstan **30** in a direction opposite the direction of cam **10** rotation as the bowstring **20** is drawn. As shown in FIG. **1**, the cam **10** will rotate in a first rotational direction **76** (e.g. clockwise) when drawn, and the power cable **24** wraps around the capstan **30** and extends toward the terminal post **32** in a second rotational direction **78** (e.g. counter-clockwise) that is opposite the first rotational direction as the power cable **24** is traversed from the elongate straight portion **28** toward the terminal portion **36**.

In some embodiments, the elongate straight portion **28** defines a cable plane **44**, and the first axle **18** and the terminal **32** are located on opposite sides of the cable plane **44**.

In some embodiments, a distance between the first axle **18** and the terminal **32** is greater than a distance between the first axle **18** and a portion of the cam track **14**.

The drawstring **20** leaves the cam **10** at an exit location **22**. The axle plane **46** described with respect to FIG. **7** is illustrated in FIG. **1**. The axle plane **46** divides the cam **10** into a first part **47** and a second part **48**. The capstan **30** and terminal **32** are located in the first part **47**, and the drawstring **20** exit location **22** is located in the second part **48**. A distance between the terminal **32** and the axle plane **46** is

greater than a distance between the capstan **30** and the axle plane **46**. Preferably, the distances are measured in a direction orthogonal to the axle plane **46**—thus, the recited distances are the shortest distances between the axle plane **46** and the cam portions at issue.

The cam **10** shown in FIG. **1** is suitable for use in a two cam bow, wherein a second cam comprises a mirror image of the cam **10**. The features shown and described with respect to FIG. **1** can be duplicated in mirror image and be used as a second rotatable member **72** as shown in FIG. **7**. For example, the second power cable **26** shown in FIG. **1** would wrap around a second capstan and attach to a second terminal on the second cam. It should be noted that the second cam would rotate in the second rotational direction **78** and the second power cable **26** would wrap around the second capstan in the first rotational direction **76**.

FIG. **2** shows the cam **10** of FIG. **1** in a drawn condition. The cam **10** has rotated about the axle **18** approximately 225 degrees from the condition of FIG. **1**. The first power cable **24** extends around the adjustable module **16** contacting almost a complete periphery of the module **16**. The first power cable **24** then wraps around the capstan **30** and terminates on the terminal post **32**.

As shown in FIG. **2**, the capstan **30** comes close to contacting the power cable **24**, resulting in a portion the power cable **24** almost contacting itself. Such contact is often a limiting factor in cam design, which limits the amount of rotation that can be achieved. Having the cable **24** wrap around the capstan **30** and extend in a direction opposite of cam rotation provides for some added draw capability. From FIG. **2**, it is clear that if the power cable **24** wrapped in the same direction as cam rotation, and the terminal post **32** were located on the other side of the capstan **30**, rotation capability would be substantially diminished.

In some embodiments, the use of a capstan **30** is beneficial because the location of the power cable **24** as it wraps about the capstan **30** is effectively fixed. In various cam designs where a capstan **30** is not used, the power cable **24** often extends directly to the terminal post **32**, allowing the power cable to rotate about the terminal post **32**. Thus, the capstan **30** can be used to secure the power cable **24** such that it does not rotate about the terminal post **32**. Also, a power cable **24** often splits to form a loop **25** at the terminal post **32**. When an arrow is fired, high forces and vibrations are typically present in the cable **24**. The capstan **30** causes reaction forces to be applied to portions of the cable **24** having a full cross-sectional area, whereas if the capstan **30** were omitted, reaction forces could be applied to the smaller cross-sectional area loop **25** portion.

As shown in FIG. **2**, in the drawn condition, the first power cable **24** comprises an elongate straight portion **28** that is located near the cam **10** and extends away from the cam **10**. In some embodiments, in the drawn condition, the capstan **30** is located closer to the elongate straight portion **28** than the terminal **32**.

FIG. **3** shows a combination of FIGS. **1** and **2**, wherein the subject matter of FIG. **1** (brace condition) is shown in dashed lines and the subject matter of FIG. **2** (drawn condition) is shown in solid lines.

FIGS. **4-6** show another embodiment of a cam **10** in various orientations. FIG. **4** shows a brace orientation, FIG. **5** shows a drawn orientation and FIG. **6** shows the cam in both orientations. Like reference characters indicate like features when compared to FIGS. **1-3**.

In FIG. **4**, the first power cable **24** does not contact the cam surface **14** when in the brace condition. The capstan **30** works to locate and secure the power cable **24**. The power cable **24** wraps around the capstan **30** and extends in a direction away from the axle **18**. The power cable **24** wraps around the capstan **30** in the second rotational direction **78** as the power cable is traversed from the elongate straight portion **28** toward the terminal **32**. The cam **10** rotates in the first rotational direction **76** as the bowstring **20** is drawn.

The cam track **14** comprises a fixed portion **56** and a removable portion **58**. The removable portion **58** is shaded for clarification in FIG. **4**. The removable portion **58** can be detached and replaced with another embodiment of a removable portion **58** that is shaped differently and is interchangeable. This allows the bow to be configured for different characteristics, such as changing draw length and/or draw weight.

When the power cable **24** does not contact the removable portion **58** of the cam track **14** in the brace condition, the removable portion **58** can be removed without the use of specialized bow servicing equipment, such as a bow press.

Preferably, the power cable **24** will initially contact the fixed portion **56** of the cam track **14** as the drawstring **20** is drawn.

In FIG. **4**, a second power cable **26** attaches to a force vectoring anchor **40**, for example as disclosed in US 2010/0089375.

The above disclosure is intended to be illustrative and not exhaustive. This description will suggest many variations and alternatives to one of ordinary skill in this field of art. All these alternatives and variations are intended to be included within the scope of the claims where the term "comprising" means "including, but not limited to." Those familiar with the art may recognize other equivalents to the specific embodiments described herein which equivalents are also intended to be encompassed by the claims.

Further, the particular features presented in the dependent claims can be combined with each other in other manners within the scope of the invention such that the invention should be recognized as also specifically directed to other embodiments having any other possible combination of the features of the dependent claims. For instance, for purposes of claim publication, any dependent claim which follows should be taken as alternatively written in a multiple dependent form from all prior claims which possess all antecedents referenced in such dependent claim if such multiple dependent format is an accepted format within the jurisdiction (e.g. each claim depending directly from claim **1** should be alternatively taken as depending from all previous claims). In jurisdictions where multiple dependent claim formats are restricted, the following dependent claims should each be also taken as alternatively written in each singly dependent claim format which creates a dependency from a prior antecedent-possessing claim other than the specific claim listed in such dependent claim below.

This completes the description of the preferred and alternate embodiments of the invention. Those skilled in the art may recognize other equivalents to the specific embodiment described herein which equivalents are intended to be encompassed by the claims attached hereto.

The invention claimed is:

**1**. An archery bow having a brace condition and a drawn condition, the archery bow comprising:

a riser;

a first limb and a second limb supported by the riser;

a first rotatable member supported by the first limb on a first axle, a second rotatable member supported by the second limb on a second axle, the first rotatable member comprising a cam track, a capstan and a terminal;

a drawstring extending between the first rotatable member and the second rotatable member;

a power cable attached to said terminal, said power cable extending from said terminal, wrapping around said capstan and extending toward the second limb;

wherein the capstan is located between the cam track and the terminal, and in the brace condition, the power cable wraps around the capstan in a first rotational direction as the power cable is traversed toward the terminal; and when the bow is drawn from the brace condition, the first rotatable member rotates in a second rotational direction that is opposite the first rotational direction.

**2**. The archery bow of claim **1**, wherein a portion of the cam track is located between the capstan and the first axle.

**3**. The archery bow of claim **1**, wherein, in the brace condition, the power cable is not oriented in said cam track.

**4**. The archery bow of claim **1**, wherein a distance between the first axle and the terminal is greater than a distance between the first axle and the cam track.

**5**. The archery bow of claim **1**, wherein at least a portion of said cam track comprises a module that is attached to said first rotatable member.

**6**. The archery bow of claim **5**, wherein said module is adjustable between a plurality of orientations with respect to said first rotatable member.

**7**. The archery bow of claim **6**, wherein said plurality of orientations comprises a plurality of rotational orientations about said first axle.

**8**. The archery bow of claim **5**, wherein said module is interchangeable with a second module having a different shape.

**9**. The archery bow of claim **1**, further comprising a second power cable, said second rotatable member comprising a second cam track, a second capstan and a second terminal, the second power cable attached to said second terminal, said second power cable wrapping around said second capstan and extending toward the first limb;

wherein the second capstan is located between the second cam track and the second terminal.

**10**. The archery bow of claim **9**, wherein said second rotatable member comprises a mirror image of said first rotatable member.

**11**. An archery bow having a brace condition and a drawn condition, the bow comprising:

a riser;

a first limb and a second limb supported by the riser;

a first rotatable member supported by the first limb on a first axle, a second rotatable member supported by the second limb on a second axle, the first axle and the second axle defining an axle plane, the first rotatable member comprising a cam track, a capstan and a terminal;

a drawstring extending between the first rotatable member and the second rotatable member, the drawstring extending from the first rotatable member at an exit location;

a power cable attached to said terminal, extending away from said terminal, wrapping around said capstan and extending toward the second limb;

wherein, in the brace condition, the axle plane divides the first rotatable member to a first part and a second part, the capstan and the terminal located in the first part, the drawstring exit location located in the second part, and a distance between the terminal and the axle plane is greater than a distance between the capstan and the axle plane.

**12**. The archery bow of claim **11**, wherein said distance between the terminal and the axle plane is measured orthogonal to said axle plane, and said distance between the capstan and the axle plane is measured orthogonal to said axle plane.

**13**. The archery bow of claim **11**, wherein, in the brace condition, said power cable comprises an elongate straight portion located near said first rotatable member, the elongate straight portion defines a cable portion plane, said first axle and said terminal are located on opposite sides of said cable portion plane.

**14**. The archery bow of claim **11**, wherein, in the drawn condition, said power cable comprises an elongate straight portion located near said first rotatable member, the capstan located closer to the elongate straight portion than the terminal.

**15**. The archery bow of claim **11**, wherein a distance between the first axle and the terminal is greater than a distance between the first axle and the cam track.

**16**. The archery bow of claim **11**, wherein, in the brace condition, the power cable is not oriented in said cam track.

**17**. The archery bow of claim **11**, wherein at least a portion of said cam track comprises a module that is attached to said first rotatable member, the module being removable or repositionable.

**18**. The archery bow of claim **11**, further comprising a second power cable, said second rotatable member comprising a second cam track, a second capstan and a second terminal, the second power cable attached to said second terminal and extending toward the first limb, said second power cable comprising a second capstan portion in contact with said second capstan and a second terminal portion in contact with said second terminal, the drawstring extending from the second rotatable member at a second exit location;

wherein, in the brace condition, the axle plane divides the second rotatable member to a first part and a second part, the second capstan and the second terminal located in the first part, the second drawstring exit location located in the second part, and a distance between the second terminal and the axle plane is greater than a distance between the second capstan and the axle plane.

**19**. The archery bow of claim **18**, wherein said second rotatable member comprises a mirror image of said first rotatable member.

* * * * *