US 20080135032A1

(19) United States

(12) Patent Application Publication

Islas

(10) Pub. No.: US 2008/0135032 A1

(43) Pub. Date: Jun. 12, 2008

(54) **BOWSTRING CAM FOR COMPOUND BOW**

(75) Inventor: **John J. Islas**, Baldwinsville, NY (US)

Correspondence Address:
Bernhard P. Molldrem, Jr.
333 East Onondaga Street
Syracuse, NY 13202

(73) Assignee: **Richard K. Boice**

(21) Appl. No.: **11/937,532**

(22) Filed: **Nov. 9, 2007**

Related U.S. Application Data

(60) Provisional application No. 60/873,238, filed on Dec. 7, 2006.

Publication Classification

(51) **Int. Cl.**
F41B 5/14 (2006.01)

(52) **U.S. Cl.** **124/90**

(57) **ABSTRACT**

A bowstring cam assembly for compound archery bow has a bowstring cam member that is journaled at an end of the bow power limb. First and second power cams are affixed onto the bowstring cam member to rotate with it, and first and second flexible inextensible cam cables extend over the periphery of the associated power cams. The cam cables and the power cams cooperate to determine draw characteristics for the bow. The bowstring cam member is provided with an acircular cam profile. The second power cam is situated to one side of the axis of the bowstring cam, such that at an end of travel, i.e., at full release, both the first and second power cables are pulling in a common direction.

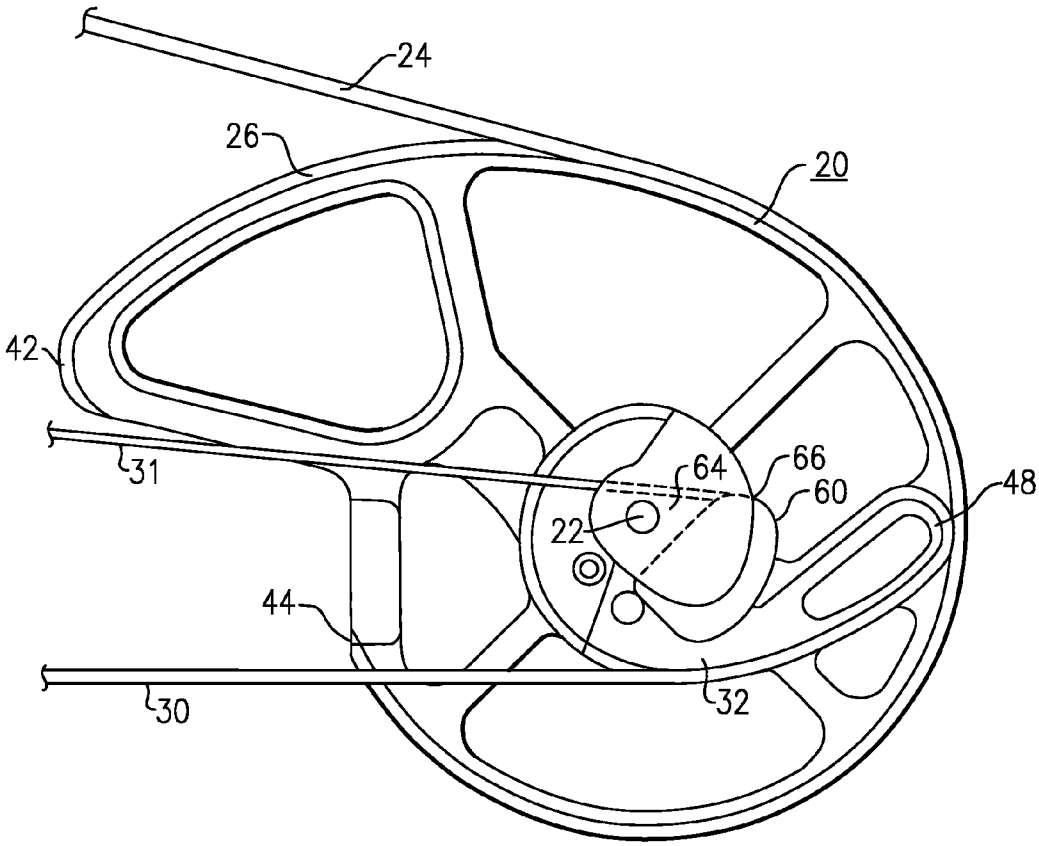

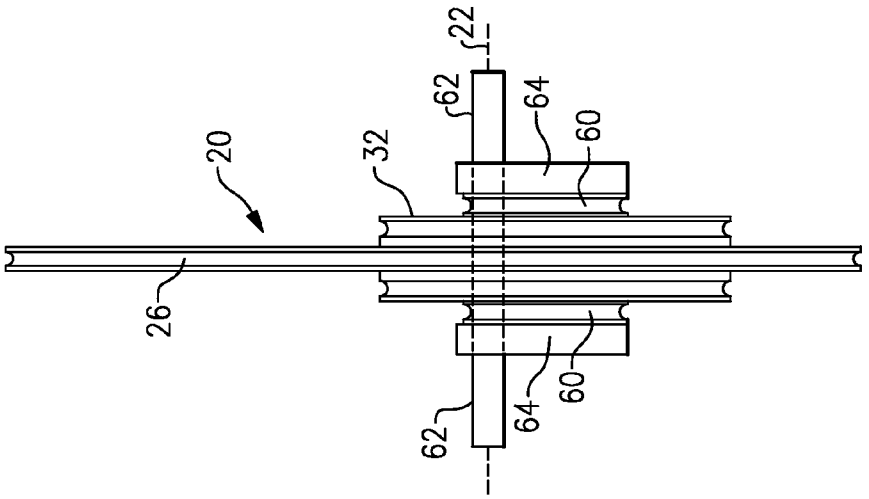

FIG.2

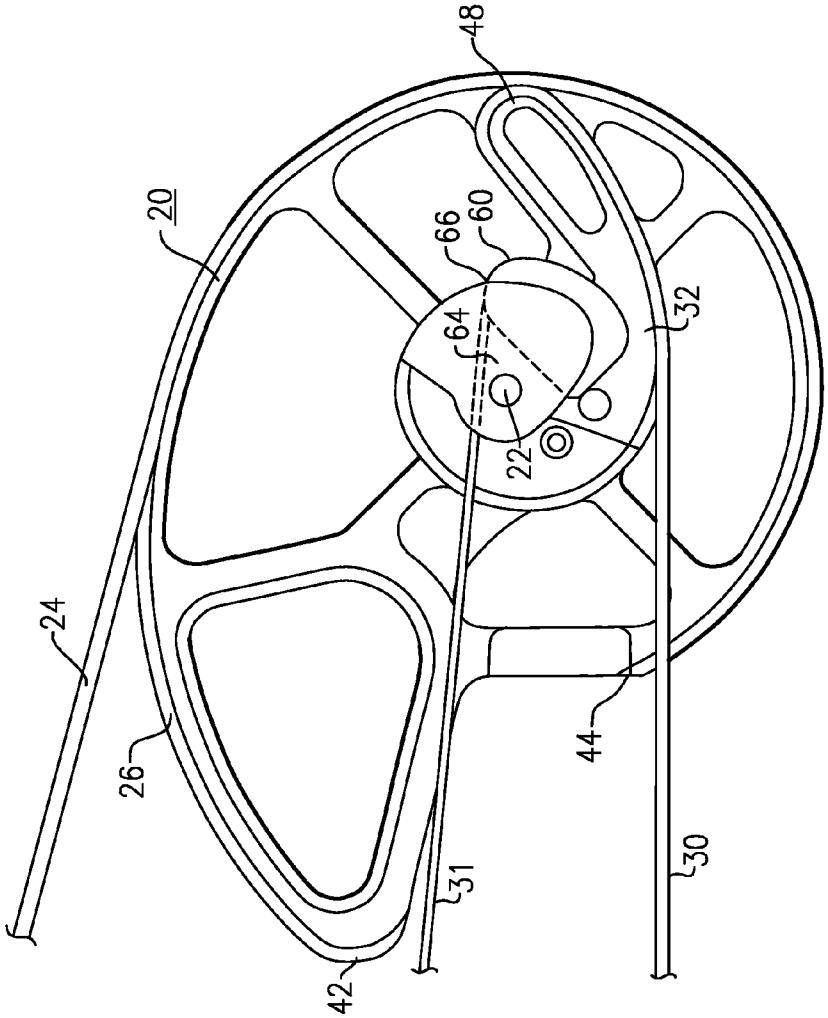

FIG.1

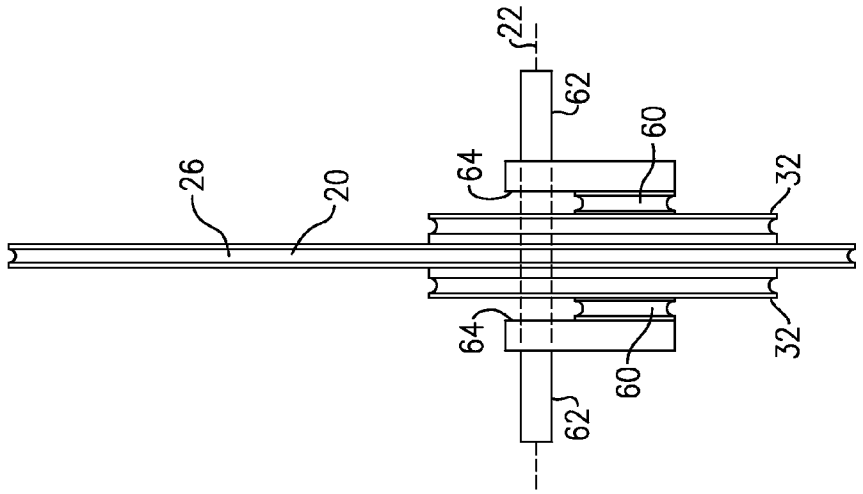

FIG.4

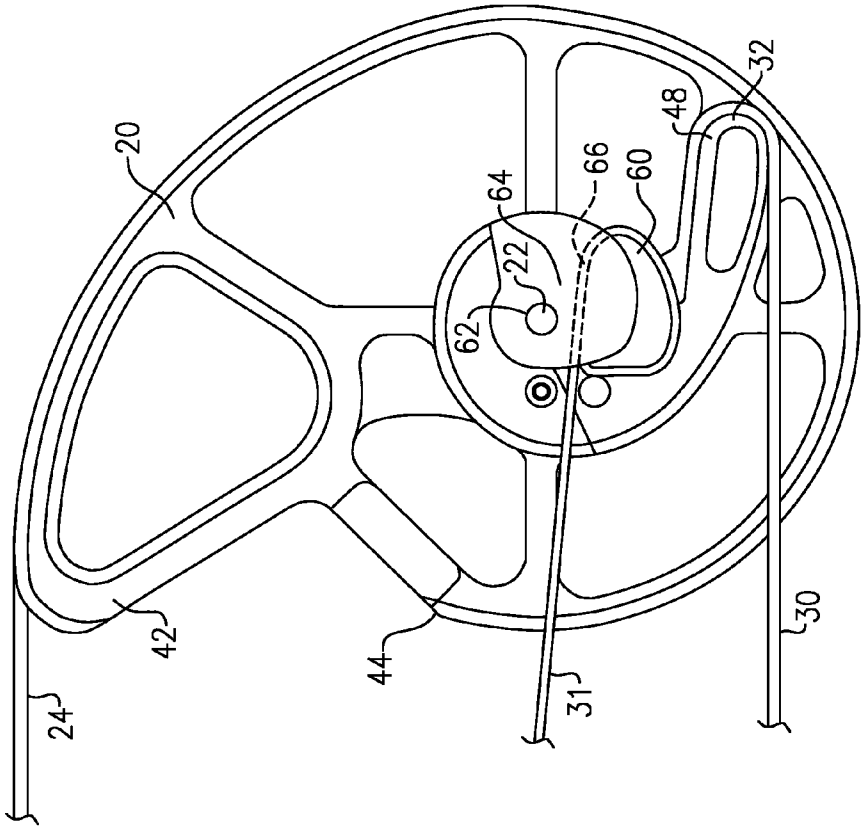

FIG.3

BOWSTRING CAM FOR COMPOUND BOW

[0001] This application claims priority under 35 U.S.C. § 119(e) of Provisional Patent Application Ser. No. 60/873,238, filed Dec. 7, 2006.

BACKGROUND OF THE INVENTION

[0002] This invention is directed to the field of archery, and more specifically to compound bows of the type employing cams and control cables to achieve a programmed draw weight, and the latter being variable with draw length. The invention is more particularly concerned with improvements to such compound bows which make the bows more compact and streamlined, and which permit the archer to select the bow's draw characteristic, and which increases the bow's shooting performance.

[0003] This invention is more particularly directed to compound bows of the type that are described in my earlier U.S. Pat. No. 6,776,148 (Aug. 17, 2004). That patent is incorporated herein by reference. The invention is directed to an improvement to the bowstring cam member of the type disclosed therein. The bowstring cam members are supported on the outer ends of the upper and/or lower power limbs, and rotate to take up and release the bow string.

[0004] A bow of this general type is described in my earlier U.S. Pat. Nos. 5,388,564 and 6,067,974. Those patents are incorporated herein by reference. Archery bows with programming means incorporated into them to regulate draw weight are also described in U.S. Pat. Nos. 3,854,417; 3,923,035; 3,486,495; and 4,287,867. These bows have means to regulate their draw weight so that a maximum pull weight is attained at an intermediate draw position, and with the draw weight dropping to some fraction of full draw weight at the full draw position. It is also an objective of such bows to transfer as much as possible of the energy that is stored in the bow to the arrow, so that the arrow will fly faster and farther for a given draw weight. These goals have been difficult to achieve.

[0005] A number of compound bows have included one or more bowstring cams supported at the outer end of the spring limb or power limb. Typically one eccentric cam is provided on one limb, and there is a circular wheel at the end of the other limb. In addition, the bowstring cams currently used all are configured so that the radius increases on draw, i.e., the distance from the axis of the cam to the point of contact with the bowstring, i.e., the tangent with the bowstring. Accordingly, the radius decreases when the cam rewinds the bowstring. With that system, the rate at which the bow string moves forward becomes smaller as the bowstring approaches the fully released, i.e., brace position. This means that the bowstring does not accelerate the arrow optimally, and at least some of the energy stored in the power limb is wasted. Bows that employ bowstring cams are discussed, e.g., in Andrews et al. U.S. Pat. No. 6,082,346 and Despart et al. U.S. Pat. No. 6,474,324. In an ideal compound bow, all the energy stored in the power limbs should be transferred to the arrow to maximize the flight of the arrow. Also, any energy that remains in the bow will cause bow noise. That is, the inefficient design of the prior compound bows will cause the bowstring to snap when the arrow is released. Previous proposals for compound bows involving bowstring cams have not configured the mechanical advantage of the cam relative to the bowstring to maximize the energy transfer to the arrow.

OBJECTS AND SUMMARY OF THE INVENTION

[0006] Accordingly, it is an object of this invention to provide an improved bowstring cam assembly for a compound bow that avoids the drawbacks present in the bows of the prior art.

[0007] It is another object to provide a cam that increases the bow performance for a given draw weight, and is quieter than current bows.

[0008] It is a further object to provide a bowstring cam assembly that optimizes draw characteristics and energy transfer of the bow.

[0009] It is still another object to improve overall behavior of the compound bow.

[0010] One aspect of this invention involves an improvement to compound bows of the type that include a riser having an upper end and a lower end, with upper and lower resilient power limbs, i.e., spring limbs, that have their inboard ends affixed to the upper and lower ends of the riser, and synchronizing means, e.g., a cam and cable arrangement, for ensuring equal flexing of the upper and lower power limbs upon draw and release of the bowstring. In the bow that employs the bowstring cam(s) according to preferred embodiments of the invention, upper and lower bowstring cams each are rotatably held at their axes on outboard ends of the upper and lower power limbs, and there are also associated upper and lower power cam arrangements, each having one or more inboard cams rotatably held at a rigid portion of the riser, one or more outboard power cams affixed onto the associated bowstring cam to rotate with it, and one or more flexible inextensible cam cables extending over the periphery of the associated inboard and outboard power cams. The power cam arrangement is configured so as to cooperate and thus to determine draw characteristics of the bow. In embodiments of this invention, the bowstring cams are provided with a cam profile with a lobe or apex oriented such that the radius, from the axis thereof to the tangent with the bowstring, diminishes as the bowstring is drawn and increases as the bowstring returns after release from a drawn position to the full brace position. This changes the mechanical advantage of the cams on the bowstring after the bowstring is released so as to accelerate the bowstring and arrow. In other words, the rotational energy of the bowstring cam is transferred more efficiently to the arrow.

[0011] In some preferred arrangements, the bowstring cams may be forged of a lightweight metal. The bowstring cams may rotate over an angle exceeding 90 degrees between fully drawn and fully returned positions. The offset ratio of the bowstring cam, i.e., the size of the base circle relative to the lobe of the cam, may be on the order of ⅔, and in one preferred embodiment about 0.633. The profile of the bowstring cam achieves an optimal acceleration of the bow string and arrow, so that more of the bow's energy is transferred as kinetic energy to the arrow. This also gives the bow a quieter action.

[0012] In the present improvement to the bowstring cam, which may be at the upper limb, lower limb, or both limbs of the bow, the bowstring cam is provided with an acircular profile, and there is a second power cam on one side or on both sides of the bowstring cam. The second power cam is offset to one side of the bowstring axis, such that at the end of travel

(such as when the bowstring is fully released) the power cables are pulling in a common direction to rotate the bowstring cam. This configuration results in improved acceleration of the arrow throughout the travel of the bowstring.

[0013] There is a pivot pin on the bowstring cam assembly axis, and this extends outward beyond the second power cam, and is journaled at the end of the power limb.

[0014] The offset of the second power cam is achieved by having a crank member affixed onto the second power cam at the side away from the first power cam and the bowstring cam, with the pivot pin then projecting out from the crank member.

[0015] The first and second power cam members can be located on one side only in some embodiments, but more favorably there are first and second power cams on both sides, for a balanced action and to permit the bow to be configured as a quad-cam compound bow. In that case, there are crank members disposed outside of the second power cams on each side.

[0016] In any case, the second power cam is situated entirely to one side of the pivot pin axis. The rotational travel of the bowstring cam assembly is such that at full draw the power cables are pulling in opposed directions, but as the bowstring cam assembly rotates back to the release position the tangent, or pivot point, of the second power cable to the second power cam moves across the axis, so that at the end of travel both first and second power cables are pulling in a common direction.

[0017] The above and many other objects, features, and advantages of this invention will present themselves to persons skilled in this art from the ensuing description of preferred embodiments of this invention, as described with reference to the accompanying Drawing.

BRIEF DESCRIPTION OF THE DRAWING

[0018] FIG. **1** is a side view of the cam assembly of an embodiment of this invention, with the bowstring drawn back.

[0019] FIG. **2** is an edge-on view thereof.

[0020] FIG. **3** is a side view of the cam assembly, with the bowstring released, i.e., not drawn, and thus showing the cam member(s) rotated from the orientation shown in FIGS. **1** and **2**.

[0021] FIG. **4** is an edge-on view showing the offset of the second power cam member relative to the pivot pin or axle.

DETAILED DESCRIPTION OF A PREFERRED EMBODIMENT

[0022] The compound bow on which the improved bowstring cam may be employed is described in my earlier U.S. Pat. No. 6,776,148, and that bow is described briefly here, but the contents of that patent are incorporated here by reference.

[0023] The compound bow has a riser or handle portion at its center with upper and lower power limbs or spring limb portions with inboard ends that are affixed onto at the upper and lower ends of the riser. The bow is considered in its normal, upright shooting orientation, as is conventional. There are upper and lower bowstring cam assemblies, e.g., bowstring cam **20**, that are pivotally or rotationally attached at respective pivot axes to the outboard ends of the power limb members. A bow string **24** is attached to each bowstring cam **20** and rides in a peripheral groove or channel **26** in each of these cams, which groove is adapted to receive the bow string **24**. Synchronizing pulleys are pivotally mounted on the riser near the ends. A continuous synchronizing cable is reeved to the synchronizing pulleys and passes over idler wheels and through a vertical cable passage in the riser. The action of the synchronizing pulley and cable system is well understood, and is employed for ensuring even flexing of the upper and lower limbs.

[0024] An inboard cam member is affixed onto the synchronizing pulley and carries a pair of power cables, here shown as cable **30** and cable **31**. The power cables **30**, **31** may be reeved to the inboard cam(s) (not shown). The power cable **30** rides in a cam groove of a first outboard power cam member **32** that is mounted coaxially with the associated bowstring cam **20**. The second power cable **31** rides in a cam groove of a second power cam **60**, which is mounted on the bowstring cam assembly, outside of the first power cam **32**, i.e., on the side remote from the bowstring cam **20**. It should be noted that the inboard cam members may be mounted on upper and lower rigid pylons that project proximally (toward the archer position), which improves the mechanical advantage. That is, the pylon positions the inboard cam member so that the power cables **30** and **31** pull the outboard cams at a relatively steep angle relative to the power limbs, and pull against a point that is fixed in relation to the bow riser, and not against the other bow limb. The first power cable **30** is carried in a peripheral groove or channel on the first power cam member **32**, passing over a lobe **48** in the cam member, and going to an attachment or anchor point. The second power cable **31** rides in a peripheral groove in the second power cam member **60**, passing over one or more lobes, and being attached at an anchor point. There is a fulcrum point **66** shown here in FIGS. **1** and **3** where the power cable **31** is tangent to the second cam member **60**. The location of the fulcrum point **66** changes during rotation.

[0025] Means are employed for preventing the limbs from becoming twisted when the string **24** is drawn, and this can be achieved by employing a quad cam action, as disclosed in my prior patent. Here, for each of the upper and lower limbs, there are a pair of inboard power cam members supported coaxially on the associated pylon, a pair of outboard cam members mounted on either side of the associated bowstring cam **20**, and two sets of cam cables **30** and **31**. The cables **30** and **31** are flexible, but inextensible. A quad cam arrangement has been described in my earlier U.S. Pat. No. 6,067,974. In this compound bow arrangement, the synchronizing wheel or pulley and synchronizing cable(s) are configured in a manner such as is discussed in that patent. The spring limb or power limb is formed of a pair of parallel spring components with the bowstring cam member **20** and the outboard cam members supported between the ends of the two parallel spring components. A journal member is present at the outboard end of each spring component, and supports the cam members.

[0026] In the preferred version of this compound bow, the upper bowstring cam and the lower bowstring cam would be mirror images of one another.

[0027] The bowstring cam member **20** has the groove **26** in which the bowstring **24** rides on its circumference or periphery. The bow string passes over a protuberance or cam lobe portion **42** of the cam member **20**, and follows the groove **26** around the periphery of the cam member to an anchor point **44**. In this embodiment, the ratio of the radius of the main base circle of the cam member **20** from the axis **22** to the groove **26**, to the radius from the axis to the groove at the apex of the lobe **42**, may be calibrated for optimum performance. The amount of cam offset selected may vary from one bow to another, or from one archer to another. The amount of cam rotation

between full draw and full brace, i.e., rotary stroke, for the bowstring cam member **20** may exceed ninety degrees of arc, and can be about 135 degrees.

[0028] The inner power cam member (not shown) may have an insert portion that can be interchanged with another insert portion of a different shape in order to bring about a desired draw characteristic for the bow.

[0029] The bowstring cam member **20** in this embodiment may be molded or forged, or made from extruded metal stock, and may have cutouts and spokes to make it light in weight. The cutouts serve to relieve some of the mass of the cam member, reducing the rotational inertia without any sacrifice of rigidity. The bowstring cam member **20** positioned on the outboard end of the power limb increases its effective diameter from a full draw position (i.e., fully rotated out) to brace height (fully returned) when the archer releases the bow string. This acts to increase arrow speed by accelerating the bow string during take up. The rotational energy in the bowstring cam member **20** at the end of travel, coupled with the increase in radius at that point, causes a more efficient transfer of mechanical energy into the bowstring **24** and the arrow. This mechanism allows the bow to maintain bow string tension all the way from full draw to brace height. The bow maintains string tension as well as or better than other types of compound bows, and especially better than those that have a cam action that is the reverse of the cam members of this invention. This mechanism works quite effectively on the quad cam system bow, but the bowstring cam member that embodies the principles of this invention can be used to advantage with other compound bow systems.

[0030] As shown in FIGS. **1**, **2**, **3**, and **4** of the Drawing Figures, the improved version of the bowstring cam assembly has first power cams **32** and second power cams **60** disposed on each side of the bowstring cam member **20**. The second cam member **60** is disposed outside, or below, the axis **22** of the pivot pin **62** or axle of the bowstring cam assembly. The pivot pin or axle **62** is affixed on each side to a crank portion **64** that defines an offset from the pivot pin **62** to the inside portion of the cam **60**. In other words, there is a void behind the crank portion **64** where the second power cable **31** can cross the axis **22** during the rotary travel of the bowstring cam assembly.

[0031] Note that at the end of travel after the bowstring is released, both of the power cables **30** and **31** are pulling together to turn the cam member **20**. In the prior art, the two power cables, i.e., the two halves of the power cable, always pull against one another.

[0032] The power cable **31** contacts the second power cam member **60** at the fulcrum point **66**. Initially, i.e., before the bowstring **24** is drawn back, the fulcrum point is below or to the outside of the axis **22** of the pivot pin **62**. As the bowstring is drawn back, the cam **60** rotates and allows the fulcrum point **66** to move to the other or superior side above the axis of the pivot pin **62**, as shown in FIGS. **1** and **2**. The effects the let-off, i.e., decrease in draw weight as the bowstring **24** is drawn fully back. As rotation increases, the mechanical advantage increases as the fulcrum point **66** moves out radially from the axis **22**, opposite to the position of the corresponding fulcrum point of the power cable **30** on the first power cam member **32**.

[0033] When the bowstring is released to shoot the arrow, mechanical advantage changes in the opposite sense, continuously increasing the force on the bowstring as it accelerates the arrow.

[0034] At the end of travel, as shown in FIGS. **3** and **4**, both ends of the power cable **30** are pulling the cam **20** in the same direction for maximum force and speed. This results in an optimal transfer of energy from the bowstring to the arrow up until the bowstring reaches the fully released position as shown in FIG. **3**.

[0035] While the invention has been described and illustrated in respect to a selected preferred embodiment, it should be appreciated that the invention is not limited only to that precise embodiment. Rather, many modifications and variations would present themselves to those of skill in the art without departing from the scope and spirit of this invention, as defined in the appended claims.

I claim:

1. An upper and/or lower bowstring cam assembly adapted to be rotatably held at an axis thereof onto a power limb of a compound archery bow, the bowstring cam assembly comprising:

a bowstring cam member provided with an acircular profile and having a peripheral groove thereon adapted to receive a bow string;

first and second power cams affixed onto the bowstring cam member to rotate therewith, each of said first and second power cams each having a peripheral groove respectively adapted to receive first and second flexible inextensible power cables, such that the cam cables and the power cams cooperate to determine draw characteristics for said bow; and wherein

said second power cam is situated entirely to one side of the axis of the bowstring cam assembly, such that at one end of rotational travel of the bowstring cam assembly both said first and second power cables are situated on the same side of said axis, and are pulling in a common direction to rotate the bowstring cam assembly.

2. The bowstring cam assembly of claim **1** comprising a pivot pin disposed on said axis and extending outward beyond said second power cam.

3. The bowstring cam assembly of claim **1** comprising a crank member affixed onto said second power cam, and defining an offset, and a pivot pin extending out from said crank member at said axis.

4. The bowstring cam assembly of claim **1** wherein said first power cam is affixed adjacent said bowstring cam member, and said second power cam is affixed to said first power cam on a side thereof remote from the bowstring cam member.

5. The bowstring cam assembly of claim **4** comprising a crank member affixed onto said second power cam, and defining an offset, and a pivot pin extending out from said crank member at said axis.

6. An upper and/or lower bowstring cam assembly adapted to be rotatably held at an axis thereof onto a power limb of a compound archery bow, the bowstring cam assembly comprising:

a bowstring cam member provided with an acircular profile and having a peripheral groove thereon adapted to receive a bow string;

a pair of first power cams affixed onto opposite sides of the bowstring cam member to rotate therewith;

a pair of second power cams affixed onto opposite sides of the bowstring cam member to rotate therewith;

each of said first and second power cams having a peripheral groove respectively adapted to receive first and second flexible inextensible power cables, such that the cam

cables and the power cams cooperate to determine draw characteristics for said bow; and wherein

said second power cams each are situated entirely to one side of the axis of the bowstring cam assembly, such that at one end of rotational travel of the bowstring cam assembly both said first and second power cables are situated on the same side of said axis, and are pulling in a common direction to rotate the bowstring cam assembly.

7. The bowstring cam assembly of claim **6** comprising pivot pins disposed on said axis and extending outward beyond said second power cams.

8. The bowstring cam assembly of claim **6** comprising a pair of crank members affixed onto said second power cams, and defining an offset, and a pair of pivot pins extending out from said crank members at said axis.

9. The bowstring cam assembly of claim **1** wherein said first power cams are affixed adjacent said bowstring cam member, and said second power cams are affixed to said first power cams on sides thereof remote from the bowstring cam member.

10. The bowstring cam assembly of claim **4** comprising a pair of crank members affixed respectively onto said second power cams, and defining offsets, and a pair of pivot pins extending out from said crank member at said axis.

* * * * *